LE COPY

VOLUME I

TRANSCRIPT OF RECORD

Supreme Court of the United States

OCTOBER TERM, 1960

No. 501

BINKS MANUFACTURING CO.,
PETITIONER,

vs.

RANSBURG ELECTRO-COATING CORPORATION.

ON WRIT OF CERTIORARI TO THE UNITED STATES COURT OF APPEALS
FOR THE SEVENTH CIRCUIT

PETITION FOR CERTIORARI FILED OCTOBER 24, 1960

CERTIORARI GRANTED DECEMBER 19, 1960

INDEX.

Substituted Counterclaim 1

Substituted Supplemental Counterclaim 3

Plaintiff's Substituted Answer to Substituted Counterclaim 5

Plaintiff's Substituted Answer to Substituted Supplemental Counterclaim 16

Plaintiff's Substituted Cross-Counterclaim 31

Defendant's Substituted Answer to Substituted Cross-Counterclaim 41

Interrogatories and Answers 46

Exhibit A—Licensees of Defendant which have licenses under both the air and airless process (in answer to Plaintiff's Interrogatory No. 2(a)).. 81

Exhibit B—Identification of all licenses granted by Defendant up to the date of the filing of the Complaint (in answer to Plaintiff's Interrogatory No. 3(c)) 85

Exhibit C—Identification of Defendant's licensees whose agreements have been modified (in answer to Plaintiff's Interrogatory No. 7(c)) 112

Exhibits D-23, D-25, D-26, D-29, and D-35—Five of Defendant's license agreement forms from among the forty-five forms supplied in answer to Plaintiff's Interrogatory No. 8 114

Exhibit E—List of Defendant's licensees identifying the specific license form applicable to each licensee (in answer to Plaintiff's Interrogatory No. 33) 152

Exhibit F—Patents and patent applications identified in certain of Defendant's licenses (in answer to Plaintiff's Interrogatory No. 34) 178
Exhibit G—Record of shipment of typical equipment supplied by Defendant to a licensee (in answer to Plaintiff's Interrogatory No. 36) 182
Exhibit H—Identification of licenses taken over by Defendant from its predecessor (in answer to Plaintiff's Interrogatory No. 37(b) (c) (d) and (e)) 184
Exhibit K—Identification of foreign licensees of Defendant (in answer to Plaintiff's Interrogatory No. 90(b)) 192
Exhibit M—List of Defendant's agreements under which articles were painted for the U. S. Government (in answer to Plaintiff's Interrogatory No. 190 (b) and (c)) 193
Request for Admissions and Answers 194
Memorandum Opinion on Defendant's Motion for Summary Judgment 219
Order denying motion for Summary Judgment... 226
Stipulation re: Patents and Exhibits 226
Order for production of documents 228
Stipulation re: Publication, etc. 230
Stipulation re: Letter, etc. 231
Letter Mar. 4, 1955, Trageser to Amstus 232
Stipulation re: Chart, etc. 233
Stipulation re: certain Exhibits 235
Stipulation re: Defendant's knowledge of Prior Art... 236
Letter Feb. 19, 1948, Ransburg to Simmons 237
Letter Sept. 21, 1953, Stellman to Ransburg 238
List of Patents 239
Stipulation regarding Patent Rights 243

TRANSCRIPT OF PROCEEDINGS.

Colloquy 247, 397, 412

Witnesses for Defendant.

Testimony of:
Darrah, William (Deposition of) 394
Howarth, Donald Colin 391
Miller, Emery P. 250
Ransburg, Harold 408, 419
Plaintiff's Exhibit KKKK—Deposition Edwin M. Ransburg 490
Plaintiff's Exhibit LLLL—Deposition of Harold P. Ransburg 535
Plaintiff's Exhibit MMMM—Deposition of Emery P. Miller 552
Plaintiff's Exhibit NNNN—Deposition of Donald C. Howarth 570
Deposition of Milton F. Pleva 610
Deposition of Elmer Houlberg 628
Deposition of Paul Rothe 634
Deposition of Clarence E. Wallin 636
Deposition of Andrew G. Hubbard 646
Deposition of Clarence Goltermann 650
Plaintiff's Exhibit OOOO—Deposition of William A. Darrah 652
Plaintiff's Exhibit LLLLL—Deposition of Burke Bernard Roche 672
Deposition of John W. Baur 686
Deposition of Benjamin J. Hedger 694
Plaintiff's Exhibit MMMMM—Deposition of James H. Rice 698

PLAINTIFF'S EXHIBITS.

V-1—Page 4 of Laboratory Notebook 721
V-2—Page 9 of Laboratory Notebook 722
V-3—Page 11 of Laboratory Notebook 723
V-4—Page 12 of Laboratory Notebook 724
V-5—Page 13 of Laboratory Notebook 725
V-6—Sheet dated May 11, 1944 of Laboratory Notebook 726
V-7—Page 15 of Laboratory Notebook 727
R-2—Memo of March 22, 1951 of Gregg Ransburg 729
S—Letter July 15, 1953, Ransburg to Acme 730
Z-1—Letter May 27, 1953, Ransburg to Ainsworth 731
BB-1—Letter May 9, 1955, Maxwell to All-Steel Equipment, Inc. 732
FF-1—Letter Sept. 22, 1953, Maxwell to All-Steel Equipment Co. 733
FF-3—Letter May 21, 1954, Maxwell to General Electric Co. 734
FF-5—Letter March 20, 1952, Stone to General Electric Co. 735
FF-6—Letter March 4, 1952, Mailly to Ransburg 736
FF-9—Letter Oct. 4, 1955, Hughes to Body 736
FF-10—Letter July 28, 1954, Miller to General Electric Co. 738
II-1—Letter Oct. 19, 1956, Johnson to Wadsworth 740
II-2—Memo, Oct. 24, 1955, Re: General Electric Co., Mattoon, Ill. 741
II-4—Hughes Memo re: General Electric, dated Dec. 16, 1953 743
II-5—Letter Aug. 20, 1951, Creps to Air-Way Appliance Corp. 744
II-6—Letter Apr. 30, 1956, Miller to Creps 745
II-7—Letter May 7, 1953, Johnson to Ransburg 747
KK—Sales Bulletin of January 19, 1953 751

NN—Sales Bulletin No. 100, dated May 27, 1953—pricing schedule 753
OO—Pricing schedule, dated Aug. 5, 1952 756
SS—Assignment of Pugh Patent to Ransburg 762
TT—Assignment between Ransburg and Brush Development Co. 765
UU—Agreement between Ransburg and Behr-Manning Corp. 771
VV—Agreement between Ransburg and Research Corporation 779
XX—Miller Memo to Patent Attorneys 790
ZZ-7—Agreement between Ransburg and Eastern Venetian Blind Co. 793
ZZ-8—Agreement between Ransburg and DuPont 800
GGG—Drawing from Ransburg Service Manuel for No. 1 Process 807
III-1—Sales Bulletin No. 132, dated June 15, 1954 809
III-3—Price Work Sheet, dated Nov. 3, 1954 811
III-4—Letter Nov. 3, 1954, Howarth to Zadoff 813
JJJ-2—Pricing Guide for No. 2 Spray Process, dated July 15, 1953 816
KKK—Letter May 27, 1953, Ransburg to General Electric Co. 819
LLL-1—Letter Mar. 23, 1954, Maxwell to Webster-Chicago Corp. 822
LLL-2—Letter May 27, 1953, Ransburg to Webster-Chicago Corp. 824
LLL-3—Letter June 3, 1953, Webster-Chicago Corp. to Ransburg 825
LLL-4—Memo of June 26, 1953, Pleva to Ransburg 826
NNN—Letter June 17, 1955, Ransburg to Westinghouse Electric Corp. 827
OOO—Letter July 26, 1955, Miller to Chicago Rawhide Mfg. Co. 828

PPP-1—Chicago Rawhide Purchase Order—No. 100410, dated Nov. 1, 1955 832
PPP-2—Letter Nov. 4, 1955, Downer to Chicago Rawhide 834
PPP-3—Ransburg Drawing No. 231,349, dated Aug. 2, 1955 835
SSS—Agreement between Ransburg and Hotpoint, Inc. 837
EEEE—Booklet entitled—"Ransburg Coating Processes" dealing with the No. 1 system and the detearing process 847
IIII—Early brochure on the Ransburg No. 2 process.. 861
PPPP—Correspondence with Behr-Manning Corporation 862
TTTT—Letter Apr. 6, 1955, Miller to A. P. Parts Corporation 876
UUUU—Booklet entitled "Ransburg No. 2 Process," Copyright 1956, 1957 877
VVVV—Letter Aug. 14, 1951, Creps to Cleveland Welding Co. 881
WWWW—Letter July 9, 1951, Maxwell to Aluminum Goods Mfg. Co. 882
XXXX—Letter Jan. 18, 1954, Ransburg to Avco Mfg. Corp. 886
YYYY—Call Report dated Mar. 11, 1949, signed by Mr. Chutter 892
ZZZZ-1—Letter July 3, 1956, Baur to Ransburg..... 894
ZZZZ-2—Letter July 12, 1956, Ransburg to Binks Mfg Co. 895
ZZZZ-3—Form for Electro-Spray Agreement..... 896
ZZZZ-5—Form for Ransburg Electro-Spray Agreement 899
ZZZZ-7—Letter July 25, 1956, Baur to Ransburg..... 904
ZZZZ-8—Binks Drawing—SK 661 905
ZZZZ-9—Letter Aug. 16, 1956, Ransburg to Binks Mfg. Co. 907
ZZZZ-10—Letter Aug. 22, 1956, Baur to Ransburg.... 908

ZZZZ-11—Letter Aug. 31, 1956, Ransburg to Binks Mfg. Co. 909
ZZZZ-12—Letter Sept. 12, 1956, Baur to Ransburg 910
ZZZZ-13—Letter Sept. 21, 1956, Ransburg to Binks Mfg. Co. 911
AAAAA—Letter Dec. 11, 1956, Ransburg to Allegheny Ludlum Steel Corp. 912
CCCCC—Letter May 16, 1952, Ransburg to General Electric Co. 917
GGGGG—Article by Boys appearing in "The London, Edinburgh and Dublin Philosophical Magazine" Vol. 23, page 490, 1887 918
Article by Zeleny appearing in Proceedings of Cambridge Philosophical Society—Vol. 18, pages 71-83 (1915) 921
Article by Zeleny appearing in "The Physical Review"—2nd. Ser. Vol. X, No. 1, pages 1-6 (July 1917) 934
Article by Nolan and O'Keeffe appearing in Proceedings of Royal Irish Academy, Vol. XXXIX, page 21 (1929) 941
NNNNN—Expenses of Midwest Research Institute ... 943
QQQQQ—Midwest Research Institute proposal R,230 .. 945
RRRRR—Midwest Research Institute Progress Report No. 1 951
XXXXX—Letter Oct. 17, 1956, Herman E. Miller to Emery P. Miller 955

DEFENDANT'S EXHIBITS.

No 10-A—Photo of physical exhibit No. 9 showing side view 957
No. 10-D—Photo of physical exhibit No. 9 showing paint streaming from emitter 958
No. 17-A—Chart of head atomizing unit 959

No. 17-B—Chart of Reciprocating disk atomizing unit . . 960
No. 17-C—Chart of tilting disk atomizing unit 961
No. 18-A—Photo of SK-661 emitting paint 962
No. 18-B—Photo of SK-661 emitting paint 963
No. 41—Letter Oct. 1, 1958, Downer to Avco Mfg. Co... 965
Letter Oct. 7, 1958, Redfield to Downer 966
Letter Oct. 13, 1958, Downer to Redfield 967
Findings of Fact 968
Conclusions of Law 1014
Order amending Conclusion of Law No. 9..... 1016
Judgment, entered June 18, 1959 1017
Notice of Appeal 1019
Order extending time 1020

UNITED STATES LETTERS PATENT.

No. 2,685,536—W. A. Starkley, et al., Aug. 3, 1954.....1021
No. 2,794,417—W. A. Starkley, et al., June 4, 1957.....1029
Re. No. 22419—J. S. Smyser, Jan. 11, 1944.....1037
No. 1,360,654—E. E. Littlefield, Nov. 30, 1920.....1049
No. 1,475,995—L. Heis, et al., Dec. 4, 1923.....1057
No. 1,854,475—E. E. Littlefield, Apr. 19, 1932.....1067
No. 1,855,869—E. Pugh, Apr. 26, 1932.....1073
No. 1,958,406—W. A. Darrah, May 15, 1934.....1081
No. 2,221,338—H. A. Wintermute, Nov. 12, 1940.....1087
No. 2,247,963—H. P. Ransburg, et al., July 1, 1941.....1095
No. 2,270,341—H. P. Ransburg, Jan. 20, 1942.....1105
No. 2,359,476—C. K. Gravley, Oct. 3, 1944.....1113
No. 2,417,798—H. P. Ransburg, et al., Mar. 18, 1947....1123
No. 2,651,287—R. H. Turner, Sept. 8, 1953.....1135
No. 2,658,009—E. M. Ransburg, Nov. 3,1953.....1141

	Original	Print
Proceedings in the United States Court of Appeals for the Seventh Circuit		
Appendix to brief for plaintiff-appellant, Volumes I and II, see separate indices		
Appendix to brief for defendant-appellee, Volume III, see separate index		
Record from the United States District Court for the Southern District of Indiana, Indianapolis Division	511	511
Excerpt of transcript of testimony of Emery P. Miller on redirect examination	512	511
Plaintiff's Exhibit IIIII—Judgment in the case of U.S. v. Minnesota Mining and Manufacturing Co. et al., C.A. 8119 filed in the U.S.D.C. for the District of Massachusetts, dated November 6, 1950	514	512
Plaintiff's Exhibit JJJJJ—United States Letters Patent	536	533

Number	*Issued*	*Title*		
RE20,660	Feb. 22, 1938	Method of Coating and Apparatus Therefor and Product	536	533
2027087	Jan. 7, 1936	Abrasive Sheet and Process of Making the Same	548	545
2027308	Jan. 7, 1936	Manufacture of Abrasive Articles	551	548
2027309	Jan. 7, 1936	Abrasive Material	554	551
2082182	June 1, 1937	Manufacture of Abrasive Articles	562	559
2245301	June 10, 1941	Manufacture of Abrasive Articles	565	562
2279361	April 14, 1942	Electrostatic Coating Process	569	566
2287837	June 30, 1942	Method and Apparatus for Applying Coating Materials	574	571
2318570	May 4, 1943	Manufacture of Abrasives	584	581
2318571	May 4, 1943	Manufacture of Abrasives	600	597
2328577	Sept. 7, 1943	Process and Apparatus for Grading and for Coating with Comminuted Materials	614	611
2376342	May 22, 1945	Manufacture of Abrasives	625	622

	Original	Print
Record from the United States District Court for the Southern District of Indiana, Indianapolis Division—Continued		
Defendant's Exhibit 5A (Excerpts)	637	634
Page 10 of Applicant's Amendment filed June 28, 1945	637	634
Pages 14 and 29 of Applicant's Board of Appeals Brief filed January 5, 1951	638	635
Defendant's Exhibit 5B (Excerpts)	640	637
Affidavit of Gilbert Isgrigg filed March 20, 1953	640	637
Affidavit of Donald C. Howarth filed March 20, 1953	643	640
Page 15 of Applicant's Board of Appeals Brief filed May 25, 1953	646	643
Page 5 of Board of Appeals decision dated December 18, 1953	647	644
Defendant's Exhibit 6 (Excerpt)	649	645
Amendment C, filed August 3, 1956	649	645
Defendant's Exhibit 21—United States Letters Patent	652	649
Number *Issued* *Title*		
1854071 April 12, 1932 Method of Manufacturing Abrasives	652	649
2047525 July 14, 1936 Insulating Method for Electrical and Thermo-Technical Purposes, and Apparatus for Accomplishing the Same	657	654
2087260 July 20, 1937 Homogenous Piled Surface	662	659
2152077 March 28, 1939 Production of Piled Surfaces in Pattern Form	666	663
2166385 July 18, 1939 Determining Electrical Characteristics	676	673
2173032 Sept. 12, 1939 Production of Pile Surfaced Materials	680	677
2173078 Sept. 12, 1939 Production of Piled Surfaces	690	687
2174328 Sept. 26, 1939 Piled Surface in Pattern Form	697	694
2217126 Oct. 8, 1940 Piled Surface in Pattern Form	702	699
2218445 Oct. 15, 1940 Production of Pile Surface Materials	711	708
2222539 Nov. 19, 1940 Method of and Apparatus for Making Pile-Surfaced Sheets	715	712
2223476 Dec. 3, 1940 Method for Making Pile Fabrics	721	718

			Original	Print
Record from the United States District Court for the Southern District of Indiana, Indianapolis Division—Continued				
Defendant's Exhibit 21—United States Letters Patent—Continued				
Number	*Issued*	*Title*		
2231324	Feb. 11, 1941	Apparatus for and Method of Making Hat Bats	728	725
2248064	July 8, 1941	Coating, Particularly for Manufacture of Abrasives	732	729
2248853	July 8, 1941	Abrasive Article and Method of Making Same	748	745
2281558	May 5, 1942	Manufacture of Abrasive Articles and Apparatus Therefor	763	760
2356489	Aug. 22, 1944	Apparatus for Coating	774	771
2370636	March 6, 1945	Manufacture of Abrasives	787	784
2371605	March 20, 1945	Coating, Particularly for Manufacture of Abrasives	800	797
2376343	May 22, 1945	Manufacture of Abrasives	815	812
2376922	May 29, 1945	Method of and Apparatus for Making Pile Fabrics	824	821
2447374	Aug. 17, 1948	Method of Applying Coating Materials	833	830
Opinion, Castle, J.			841	838
Judgment			855	852
Clerk's certificate (omitted in printing)			856	852
Order allowing certiorari			857	853

SUMMARY OF PERTINENT DOCKET ENTRIES.

Date	Entry

October 11, 1956—Complaint filed and Summons issued.

October 26, 1956—Plaintiff files amendment to complaint. Plaintiff files Interrogatories Nos. 1 to 32 to Defendant.

October 30, 1956—Defendant files Notice of Taking depositions.

November 8, 1956—Defendant files Interrogatories Nos. 1 to 9 to Plaintiff.

November 15, 1956—Defendant files answers to Plaintiff's Interrogatories Nos. 1 to 32.

November 23, 1956—Plaintiff files answers to Interrogatories 1 to 9.

December 3, 1956—Defendant files Answer and Counterclaim.

December 10, 1956—Plaintiff files Answer to Counterclaim and files cross-counterclaim. Plaintiff files motion for order of Dismissal by Court under Rule 41(a) (2).

December 26, 1956—Plaintiff files Interrogatories Nos. 33 to 59.

January 14, 1957—Defendant files answer to Interrogatories Nos. 33 to 59.

January 29, 1957—Court sustains Plaintiff's motion for order of dismissal of its Complaint; Complaint ordered dismissed. Court grants Plaintiff leave to five Cross-counterclaim tendered to the Court with the above motion on December 10, 1956. Plaintiff files Cross-counterclaim.

February 18, 1957—Defendant files answer to Plaintiff's Cross-counterclaim.

August 28, 1957—Plaintiff files Notice of taking depositions.

November 20, 1957—Defendant files Interrogatories Nos. 10 to 24 inclusive to Plaintiff.

Date	Entry

December 10, 1957—Plaintiff files Interrogatories Nos. 60 to 88 to Defendant.

December 13, 1957—Plaintiff files answer to Defendant's Interrogatories 10 to 24.

January 16, 1958—Defendant files answers to Interrogatories Nos. 60 to 88.

February 19, 1958—Plaintiff files motion for leave to amend answer to Counterclaim and Cross-counterclaim.

February 20, 1958—Defendant files depositions of Roche, Baur, and Hedger.

March 5, 1958—Court grants Plaintiff leave to amend answer to Counterclaim and Cross-counterclaim. Plaintiff files amendment to Plaintiff's Answer to Counterclaim and its Cross-counterclaim.

March 31, 1958—Defendant files Supplement to Defendant's answer to Plaintiff's Cross-counterclaim.

April 3, 1958—Plaintiff files Interrogatories Nos. 89 to 92 to Defendant.

April 18, 1958—Defendant files Answers to Interrogatories Nos. 89 to 92 inclusive of Plaintiff.

May 14, 1958—Plaintiff files Requests for Admissions Nos. 1 to 24.

May 26, 1958—Defendant files Answers to Plaintiff's Requests for Admissions. Defendant files Motion for Summary Judgment with an affidavit of E. M. Ransburg.

June 9, 1958—Plaintiff files Motion for order for production of documents under Rule 34.

June 11, 1958—Plaintiff files Answer to Defendant's Supplemental Counterclaim.

June 13, 1958—Plaintiff files depositions of Howarth, Pleva, Houlberg, Rothe, Wallin, Hubbard and Goltermann.

Date	Entry

June 18, 1958—Plaintiff files additional Interrogatories Nos. 93 to 133. Plaintiff files Requests for Admissions Nos. 25 to 78.

June 30, 1958—Defendant files answers to Plaintiff's further Requests for Admissions Nos. 25 to 78.

July 1, 1958—Plaintiff files depositions of Downer, Miller, E. M. Ransburg and H. P. Ransburg.

July 3, 1958—Defendant files answers to Interrogatories Nos. 93 to 133.

August 7-8, 1958—Pretrial conference held.

August 25, 1958—Court enters order for production of documents under Rule 34 by the Defendant. Court enters order of pretrial conference held. Hearing held on Defendant's Motion for Summary Judgment; said motion taken under advisement.

September 2, 1958—Court files memorandum opinion; ordered and adjudged that the Defendant's Motion for Summary Judgment is denied.

September 16, 1958—Plaintiff files Interrogatories Nos. 134 to 199 and Requests for Admissions 79 to 110.

September 18, 1958—Defendant files depositions of Rice, Gustafson, Johnson and Stephens.

October 10, 1958—Defendant files Interrogatories Nos. 25 to 223 to Plaintiff and Requests for Admissions Nos. 1 to 59. Defendant files answers to Plaintiff's Requests for Admissions Nos. 79 to 110 and Answers to Plaintiff's Interrogatories Nos. 134 to 199.

October 30, 1958—Plaintiff files answers to Defendant's Request for Admissions.

November 6, 1958—Plaintiff files answers to Defendant's Interrogatories Nos. 25 to 223.

November 12, 1958—Defendant files substituted Counterclaim and substituted Supplemental Counterclaim.

Date	Entry
November 14, 1958	Plaintiff files Motion for Order to compel compliance with paragraphs 5 and 6 of Order for Production of Documents under Rule 34, or in the alternative, to produce the papers and records claimed to be privileged for the Court's determination.
November 19, 1958	Plaintiff files substituted Answer to Defendant's Substituted Counterclaim with proof of service. Plaintiff files Substituted Cross-counterclaim.
November 26, 1958	Parties file stipulations regarding patent rights of Defendant; stipulation under Rule 42(b); stipulation relating to Exhibits D-1 to D-45 and Exhibit E; also file stipulation regarding Defendant's knowledge of prior art. Defendant files substituted answer to Plaintiff's substituted Cross-counterclaim.
December 15, 1958	Plaintiff files deposition of Darrah. Cause submitted for trial on Defendant's Counterclaim. Plaintiff's Motion to Compel Compliance with paragraphs 5 and 6 under Rule 34 withdrawn. Defendant voluntarily complies with alternative request and tenders Defendant's Exhibit No. 1, which the Court examines and finds it to be privileged and denies alternative motion, orders Exhibit 1 sealed and not disclosable to anyone except the Judge and Defendant. Opening statements of parties heard in part and continued.
December 16, 1958 to December 19, 1958	Trial resumed but not concluded,
January 5, 1959 to January 8, 1959	Trial resumed and concluded.
April 16, 1959	Order of the Court assigning cause for final argument on June 16, 1959.
June 3, 1959	Parties file Stipulation waiving final argument.
June 4, 1959	Court approves stipulation waiving final argument.

Date	Entry
June 16, 1959	Court files its Findings of Fact and Conclusions of Law.
June 18, 1959	Court files correcting entry relating to Conclusion of Law No. 9. Court enters Judgment for Defendant. Court enters Judgment that Patents Nos. 2,685,536 and 2,794,417 are valid and infringed by Plaintiff. Plaintiff enjoined from use, manufacture, or sale of process or device covered by claims in said patents or infringement thereon. Defendant to recover damages for infringement of said patents together with reasonable attorneys fees and costs. Cause continued as to issues covered in stipulation of parties and Rule 42(b). Plaintiff's Cross-counterclaim dismissed and Defendant to recover its costs thereon.
July 2, 1959	Plaintiff files Notice of Appeal.

APPENDIX.

814

UNITED STATES DISTRICT COURT,
Southern District of Indiana,
Indianapolis Division.

Binks Manufacturing Company (a corporation of the State of Delaware), *Plaintiff,* vs. Ransburg Electro-Coating Corp. (a corporation of the State of Indiana), *Defendant.*	Civil Action No. IP 56-C-262

SUBSTITUTED COUNTERCLAIM.

(Original Filed December 3, 1956.)

Now comes defendant-countercomplainant, Ransburg Electro-Coating Corp., an Indiana corporation having its principal office and place of business at Indianapolis, Indiana, and files this its counterclaim against plaintiff-counter-defendant, Binks Manufacturing Company, a Delaware corporation having its principal office and place of business at Chicago, Illinois, and in support of its cause of action avers:

1. This action arises under the Patent Laws of the United States, 35 U. S. C., Sec. 271,281 et seq.

2. On August 3, 1954, United States Letters Patent No. 2,685,536 were duly and legally issued to defendant-countercomplainant for an invention of a Method for Electrostatically Coating Articles; and since that date defendant-countercomplainant has been and still is the owner of those Letters Patent.

3. Plaintiff-counterdefendant has since August 3, 1954,

infringed those Letters Patent by practicing the process covered thereby, and will continue to do so unless enjoined by this Court.

Wherefore, defendant-countercomplainant prays for judgment against the plaintiff-counterdefendant:

815 a. For an injunction against infringement, direct or contributory, by plaintiff-counterdefendant and those controlled by it.

b. For damages as provided by Title 35 U. S. C., Sec. 284-285, including reasonable attorneys' fees, costs and interest, and for an accounting to ascertain the amount thereof.

c. For such other and further relief as this Court may deem just.

Ransburg Electro-Coating,
By Verne A. Trask,
801 Hume Mansur Building,
Indianapolis 4, Indiana,
Attorney for Defendant and Countercomplainant.

Of Counsel:
Elbert R. Gilliom,
1340-1344 Consolidated Building,
Indianapolis 4, Indiana.
Harry T. Ice,
951 Consolidated Building,
Indianapolis 4, Indiana.
James P. Hume,
First National Bank Building,
38 South Dearborn Street,
Chicago 3, Illinois.

Receipt of copies of the foregoing Substituted Counterclaim (original filed December 3, 1956) acknowledged this 12th day of November, 1958.

Harold B. Hood,
Attorney for Plaintiff.

816 UNITED STATES DISTRICT COURT.

(Caption—56-C-262)

SUBSTITUTED SUPPLEMENTAL COUNTERCLAIM.

(Original Filed May 21, 1958.)

Now comes the defendant, Ransburg Electro-Coating Corp., and supplements its cause of action against the plaintiff, Binks Manufacturing Company, as asserted in its counterclaim, by making the following allegations:

4. On June 4, 1957, United States Letters Patent No. 2,794,417 were duly and legally issued to defendant, Ransburg Electro-Coating Corp., for an invention covering an Apparatus for Electrostatically Coating Articles, and since that date defendant has been, and still is, the owner of said Letters Patent.

5. Since June 4, 1957, and prior to the filing of this supplemental counterclaim, plaintiff, Binks Manufacturing Company, has been, and still is, infringing, as presently advised, at least claim 4 of said Letters Patent, and will continue to do so unless enjoined by this Court.

Wherefore, defendant-countercomplainant prays for judgment against the plaintiff-counterdefendant:

a. For an injunction against infringement, direct or contributory, of said Letters Patent No. 2,794,417 by plaintiff-counterdefendant or those controlled by it.

b. For damages as provided in Title 35 U. S. C. 817 §§ 284-285, including reasonable attorneys' fees, costs, and interest, and for an accounting to ascertain the amount thereof with respect to said Letters Patent No. 2,794,417.

c. For such other and further relief as this Court may deem just.

Ransburg Electro-Coating Corp.,
By Verne A. Trask,
801 Hume Mansur Building,
Indianapolis 4, Indiana,
Attorney for Defendant-Countercomplainant.

Of Counsel:

Elbert R. Gilliom,
1340-1344 Consolidated Building,
Indianapolis 4, Indiana.

Harry T. Ice,
951 Consolidated Building,
Indianapolis 4, Indiana.

James F. Hume,
First National Bank Building,
38 South Dearborn Street,
Chicago 3, Illinois.

Receipt of copies of the foregoing Substituted Supplemental Counterclaim (original filed May 21, 1958) acknowledged this 12th day of November, 1958.

Harold B. Hood,
Attorney for Plaintiff-Counterdefendant.

818 IN THE UNITED STATES DISTRICT COURT.
(Caption—56-C-262)

PLAINTIFF'S SUBSTITUTED ANSWER TO DEFENDANT'S SUBSTITUTED COUNTERCLAIM.

(Original filed December 10, 1956.)

Plaintiff, Binks Manufacturing Company, answers the substituted counterclaim as follows:

First Defense.

1. Plaintiff admits the allegations of paragraph 1.

2. Plaintiff admits that United States Letters Patent No. 2,685,536 was issued on August 3, 1954 and the Defendant is owner as alleged in paragraph 2, but Plaintiff denies that said Letters Patent were duly and legally issued.

3. Plaintiff denies the allegations of paragraph 3.

Second Defense.

4. The Plaintiff alleges that the following listed references clearly evidence that the claims of the Starkey 819 et al., Patent No. 2,685,536 are devoid of invention:

As Anticipation.

Heis et al, U. S. Patent No. 1, 475,995 of Dec. 4, 1923
Littlefield, U. S. Patent No. 1,360,654 of Nov. 30, 1920
Littlefield, U. S. Patent No. 1,854,475 of Apr. 19, 1932
Pugh, U. S. Patent No. 1,855,869 of Apr. 26, 1932
Darrah, U. S. Patent No. 1,958,406 of May 15, 1934
Wintermute, U. S. Patent No. 2,221,338 of Nov. 12, 1940
Ransburg et al, U. S. Patent No. 2,247,963 of July 1, 1941
Gravley, U. S. Patent No. 2,359,476 of Oct. 3, 1944

The London, Edinburgh and Dublin Philosophical Magazine, Volume XXIII, page 490 (1887).
Electrical Experiments by Francis, page 37 (1850).
Zeleny, The Physical Review, Second Series, Vol. III, No. 2 (February, 1914), pages 69-91.
Zeleny, Proceedings of the Cambridge Philosophical Society, Vol. 18, pages 71-83 (1915).
Zeleny, The Physical Review, Second Series, Volume X, No. 1, pages 1-6 (July, 1917).
Zeleny, The Physical Review, Second Series, Volume XVI, No. 2, pages 102-125 (1920).
Zeleny, Journal of the Franklin Institute, Volume 219, No. 6, pages 659-675 (June, 1935).
Proceedings of the Royal Irish Academy Volume XXXIX, Page 21 (1929).

820 To Show the State of the Prior Art.

Smyser, U. S. Patent No. Re. 22,419 of Jan. 11, 1944
DeVars, U. S. Patent No. 398,327 of Feb. 19, 1889
Simpson, U. S. Patent No. 601,594 of Mar. 29, 1898
Morton, U. S. Patent No. 705,691 of July 29, 1902
Wickson, U. S. Patent No. 735,638 of Aug. 4, 1903
Cooley, U. S. Patent No. 745,276 of Nov. 24, 1903
Fitzgerald, U. S. Patent No. 805,719 of Nov. 28, 1905
Althouse, U. S. Patent No. 1,153,004 of Sept. 7, 1915
Gentile, U. S. Patent No. 1,454,376 of May 8, 1923
Fraser, U. S. Patent No. 1,478,113 of Dec. 18, 1923
Wille et al, U. S. Patent No. 1,638,757 of Aug. 9, 1927
Hampton et al, U. S. Patent No. 1,740,981 of Dec. 24, 1929
Collins, U. S. Patent No. 1,911,808 of May 30, 1933
Formhals, U. S. Patent No. 1,975,504 of Oct. 2, 1934
Morton, U. S. Patent No. 2,048,651 of July 21, 1936
Ronzi, U. S. Patent No. 2,095,651 of Oct. 12, 1937
Meston, U. S. Patent No. 2,097,233 of Oct. 26, 1937
Russell et al, U. S. Patent No. 2,128,327 of Aug. 30, 1938
Wise et al, U. S. Patent No. 2,173,741 of Sept. 19, 1939
Formhals, U. S. Patent No. 2,187,306 of Jan. 16, 1940
Benner et al, U. S. Patent No. 2,191,827 of Feb. 27, 1940
Hill, U. S. Patent No. 2,217,444 of Oct. 8, 1940
Huebner, U. S. Patent No. 2,224,391 of Dec. 10, 1940

Gundelfinger, U. S. Patent No. 2,251,931 of Aug. 12, 1941
Rooney et al, U. S. Patent No. 2,268,622 of Jan. 6, 1942.
Branston-Cook, U. S. Patent No. 2,302,289 of Nov. 17, 1942

821

Kimball et al, U. S. Patent No. 2,354,688 of Aug. 1, 1944
Wind et al, U. S. Patent No. 2,431,629 of Nov. 25, 1947
Kearsley, U. S. Patent No. 2,438,561 of Mar. 30, 1948
Huebner, U. S. Patent No. 2,451,288 of Oct. 12, 1948
Bennett et al, U. S. Patent No. 2,491,889 of Dec. 20, 1949

5. Each of the claims of the Starkey et al patent No. 2,685,536 is void and invalid and the Defendant is barred from enforcing the same on the following grounds:

(a) As lacking invention over what has long been known to be old in the art as set forth hereinabove.

(b) As lacking novelty over the prior art hereinabove set forth which constitutes full justification for the Plaintiff's devices such as that shown in Plaintiff's Drawing SK-661 dated 5-12-54, a copy of which has been furnished Defendant.

(c) As being indefinite, ambiguous and incomplete contrary to the statutory requirement of a full, clear, concise and exact disclosure and definition of the alleged invention.

(d) As involving claims not supported by the specification of said Starkey et al Patent No. 2,685,536.

(e) As involving claims directed to mere aggregations and old combinations of well known features and steps set forth in the prior art hereinabove specified.

(f) As embracing claims constituting a fraud on the public because of the deceptive and misleading character of the description of such claims.

(g) As lacking in originality in the light of the references hereinabove cited which clearly indicate that the Commissioner of Patents exceeded his legal authority in granting said Letters Patent.

822 (h) As embracing claims broader than the patent disclosure and involving nothing more than ordinary mechanical skill and even at that of a very low order.

(i) As embracing claims wherein the patentees knowingly patented the ideas of others.

(j) As embracing claims constituting a double patenting of the alleged invention and especially in view of the Defendant's Ransburg Patent No. 2,658,009 issued on November 3, 1953 or almost a year before the issuance of Starkey et al. Patent No. 2,685,536.

(k) As embracing claims so limited and confined during the prosecution of the application in the United States Patent Office that a contention herein that they are infringed by the use of Plaintiff's device, such as that of Plaintiff's Drawing SK-661, requires the invoking of the doctrine of "estoppel by limitation".

Third Defense.

6. Defendant has and is presently granting licenses under the aforesaid Starkey et al. patent No. 2,685,536 for using the method or process thereof and which process is known as the "No. 2" or airless type process.

7. The Defendant, in granting such licenses under its patents, including the aforesaid Starkey et al. Patent No. 2,685,536 represents to the trade and in interstate commerce that it exclusively owns the patent monopoly for "electrostatically depositing airlessly atomized (without compressed air) liquid spray particles".

823 8. The Defendant, in granting its aforesaid licenses under the aforesaid Starkey et al. Patent No. 2,685,536 couples with such license agreements a leasing agreement in which it leases equipment for use in practicing the patented process of Starkey et al. Patent No. 2,685,536.

9. The Plaintiff, in its marketing of spray equipment, has ascertained that there is a demand in the trade and

in interstate commerce for a paint sprayer which will electrostatically atomize paint without making use of air, and, accordingly, fully developed a paint sprayer which it is capable of manufacturing and selling in order to meet the market demands.

10. The Defendant, in a letter dated July 12, 1956, submitted to the Plaintiff its license form Nos. 439 and 440 as being standard forms of Defendant pertaining to the spraying of paint by a sprayer which will electrostatically atomize paint without making use of air.

11. On information and belief, the Plaintiff understands that the Defendant has, in its licensing and leasing program pertaining to electrostatic spraying and beginning about January of 1948 to the date of the commencement of this action, employed 45 different forms of agreement.

12. On information and belief, the Plaintiff understands that up to the filing of the original complaint herein the Defendant has granted 733 licenses on electrostatic spraying, of which 463 were in force and effect on the date of the filing of the complaint herein.

824 13. (a) Up to the date of the filing of the complaint herein, the Defendant has included in all of its licensing agreements relating to airless electrostatic spray coating a provision requiring the Defendant, as licensor, to furnish to licensee at least some of the equipment employed in the spraying and

(b) Defendant has furnished such equipment pursuant to said license agreements.

14. (a) The Defendant, as a part of its aforesaid licenses, renders engineering and technical services to its licensees at least to the extent necessary for the use of the licensed spraying process, and

(b) Such licensees are required to compensate the Defendant licensor for such engineering and technical services by fees and

(c) Such fees have been paid by licensees to Defendant.

15. The Defendant, after restricting its Starkey et al. Patent No. 2,685,536 to only method claims in the prosecution of the application from which the patent issued, thereafter wrongfully used such patent contrary to the anti-trust laws for the purpose of tying in with licenses under the method claims of said Starkey et al. patent, leases for unpatented spraying equipment.

16. The Defendant is illegally and in violation of the anti-trust laws employing its Starkey et al. method patent No. 2,685,536 to require the leasing of equipment of Defendant as a condition for a licensee taking a license
825 under the method claims and in so doing has committed acts of unfair competition to the detriment of the public and to the damage of the Plaintiff.

17. The Defendant's entire program of licensing and leasing of electrostatic spraying equipment not only involves an abuse of its patents, but contravenes the spirit and intent of the anti-trust laws in that it enables the Defendant to extend its monopoly in such manner as to monopolize substantially the field of electrostatic spraying and especially that of electrostatic atomization without the use of air.

18. The Defendant is wrongfully using its Starkey et al. Patent No. 2,685,536,

(a) To coerce the public into leasing equipment from the Defendant, all to the detriment of the public and ultimate consumer of products processed under the Starkey et al. patent by licensees and lessees and

(b) To coerce manufacturers of spray equipment, such as the Plaintiff, into not making and selling such equipment as is, for example, shown in the aforesaid drawing SK-661 of the Plaintiff.

19. The Defendant, its officers and aforesaid alleged inventors of Starkey et al. patent No. 2,685,536, individually and collectively, have conspired with each other and with

others in restraint of trade and monopolizing, through patents and illegal agreements, of the electrostatic spray equipment business in interstate commerce, contrary to the anti-trust and anti-monopoly laws of the United States, and in so doing have committed illegal acts of unfair
826 competition, all to the detriment of the public and to the damage of the Plaintiff.

20. It is further alleged that Defendant should be held estopped from asserting the aforesaid Starkey et al. Patent No. 2,685,536 against the Plaintiff by virtue of the Defendant's unclean hands in its aforesaid wrongful acts in illegal restraint of trade and in contravention of the anti-trust laws of the United States of America.

21. (a) Defendant has substantially a complete monopoly in the United States of airless electrostatic liquid spray coating systems in its leasing program;

(b) in which it has coupled the granting of an equipment lease with the granting of a patent license as a single package deal;

(c) in which it has never leased equipment without also requiring the lessee to take a patent license;

(d) in which it has never granted a patent license without at the same time leasing equipment;

(e) in which it has required lessees as a condition to receiving leased equipment to pay an initial fee of thousands of dollars which more than compensated Defendant for the cost of manufacturing the equipment furnished;

(f) in which it has required lessees to turn over to Defendant patent licenses on inventions made or acquired by such lessees relating to the leased system;

(g) in which it has in its composite lease and license forms of agreement required recognition of the validity of not only patents taken out by Defendant but also of any patent rights acquired by Defendant from third parties;

827 (h) in which it has required lessees to accept a termination provision in leases which required the lessee, upon termination of the lease, to surrender to Defendant all of the leased equipment without receiving any refund for the initial fee of thousands of dollars paid by the lessee;

(i) in which Defendant has provided in its composite lease and license agreement forms for the furnishing by Defendant of services and replacement parts to the lessees;

(j) in which Defendant has included in the leased equipment numerous unpatented parts not embraced by the claims of the Starkey et al. letters patent No. 2,685,536;

(k) in which in its leases, Defendant has received full compensation, dollar wise, for the manufacturing cost of the major item of the equipment leased, namely the power pack, which is not covered by any of the claims of the Starkey et al. letters patent No. 2,685,536;

(l) in which Defendant has, in certain of its leases, granted more favorable terms to paint or coating material manufacturers who in turn recommended the Defendant's leased system in their advertising;

(m) in which Defendant has refused to grant spray equipment manufacturers, such as the Plaintiff herein, a license under the Starkey et al. patent No. 2,685,536, unless such manufacturers sell the licensed spray equipment only to customers licensed by Defendant;

(n) in which Defendant in its license-lease agreements did not specifically identify by number any of its patents which applied directly to the equipment being leased, thus requiring licensees to recognize the validity of any patents considered by Defendant to be applicable, even though not identified; and

828 (c) in which Defendant has required the payment of a fee for the use of reciprocators in its leased systems even where Defendant did not supply such reciprocators to the lessee.

22. The Defendant has

(a) engaged in interstate commerce; and

(b) in the course of such commerce leased electrostatic spray coating equipment for use within the United States;

(c) said leasing being on the condition, agreement, or understanding that the lessee should not use or deal in the equipment of a competitor or competitors of Defendant; and

(d) thereby lessened competition or tended to create a monopoly in the field of electrostatic spray coating equipment.

23. Defendant has illegally exploited the Patent System of the United States by acquiring patent rights from outside the Defendant's organization for the purpose of restricting entry of competitors into the field of electrostatic spray coating equipment.

24. Defendant has extended its monopoly in the field of electrostatic spray coating equipment by requiring licensees, as a condition for receiving a license, to license back to Defendant, royalty-free, patent rights in inventions made in the airless electrostatic spray coating field by such licensees.

25. Defendant has secured patent rights from outside parties for the purpose of intimidating and overwhelming and coercing the trade into dealing only with the Defendant.

829 26. Defendant's predecessor, Harper J. Ransburg Company, entered into an agreement in restraint of trade with the Behr-Manning Corporation dividing the field of electrostatic coating between the parties thereto. Defendant has succeeded to all of said predecessor's rights under said agreement, and in furtherance of the purposes

thereof, has coerced the trade into dealing only with Defendant in the field of electrostatic spray coating of liquids.

27. Defendant, by licensing its patents only as a package, has enlarged the patent monopoly of particular patents for the exploitation of the monopoly of its other patents.

28. Defendant, by licensing its patents only as a package, has enlarged the patent monopoly of particular patents for the exploitation or promotion of a business not within the patents.

29. Defendant, through its license and lease agreements, has created a perpetual monopoly in the field of electrostatic spray coating equipment, said monopoly extending beyond the term of any of Defendant's patents which may apply to such equipment.

30. As far as Plaintiff is advised, Defendant owns 100% or substantially 100% of all airless electrostatic spray coating systems in use in the United States. Defendant does not sell such systems to users.

31. By its policy of leasing, but not selling, airless electrostatic spray coating systems, and imposing the conditions recited in such leases, Defendant has re-
830 strained the development and growth in the United States of business in:

(a) making and selling repair and replacement parts for such systems; and

(b) buying and selling used airless electrostatic spray coating systems.

32. Defendant, in its leases, exerts substantially complete monopolistic control over its lessees by:

(a) requiring lessees to license back to Defendant, royalty-free, all inventions made in the field of electrostatic spray coating by such lessees

(b) retaining the right to cancel such leases and remove the leased equipment from the premises of the lessee, without cause

(c) retaining the right to make changes in the equipment supplied to lessees

(d) making it economically impossible for lessees to procure replacement parts for the equipment on the open market

(e) making it economically impossible for lessees to secure servicing of such equipment in the open market

(f) making it impossible for its licensees to divest themselves of defendant's equipment without suffering a complete loss of their investment in such equipment.

Wherefore, Plaintiff prays:

That the Defendant take nothing by its Substituted Counterclaim;

That the Defendant be ordered to purge itself of its wrongful and illegal conduct in its licensing and leasing program with respect to electrostatic spraying by dissipating the effects of its wrongful conduct;

831 That the aforesaid Starkey et al., patent No. 2,685,536 be held non-infringed by any of the Plaintiff's spraying equipment;

That the aforesaid Starkey et al., patent No. 2,685,536 be held invalid and a nullity from its inception;

That the Court grant to the Plaintiff such other and further relief as it may deem just and equitable.

Harold B. Hood,
1001 Hume Mansur Building,
Indianapolis 4, Indiana,

Charles F. Meroni,
Otto R. Krause,
Hill, Sherman, Meroni, Gross & Simpson,
53 West Jackson Blvd.,
Chicago 4, Illinois,
Attorneys for Plaintiff.

Receipt of four (4) copies of the above and foregoing substituted Answer to Defendant's Counterclaim is hereby acknowledged this 19th day of November, 1958.

V. A. Trask,
Attorney for Defendant.

832 IN THE UNITED STATES DISTRICT COURT.
(Caption—56-C-262)

PLAINTIFF'S SUBSTITUTED ANSWER TO DEFENDANT'S SUBSTITUTED SUPPLEMENTAL COUNTERCLAIM.

(Original filed June 11, 1958.)

Plaintiff, Binks Manufacturing Company, answers the Substituted Supplemental Counterclaim as follows:

First Defense.

33. Answering paragraph 4, Plaintiff admits that United States Letters Patent No. 2,794,417 was issued on June 4, 1957 and that Defendant is the owner as alleged, but denies that such Letters Patent were duly and legally issued.

34. Plaintiff denies the allegations of paragraph 5.

Second Defense.

35. The Plaintiff alleges that the following listed references clearly evidence that the claims of the Starkey et al patent No. 2,794,417 are devoid of invention:

833 **As Anticipation.**

Heis et al, U. S. Patent No. 1,475,995 of Dec. 4, 1923
Littlefield, U. S. Patent No. 1,360,654 of Nov. 30, 1920
Littlefield, U. S. Patent No. 1,854,475 of Apr. 19, 1932

Pugh, U. S. Patent No. 1,855,869 of Apr. 26, 1932
Darrah, U. S. Patent No. 1,958,406 of May 15, 1934
Wintermute, U. S. Patent No. 2,221,338 of Nov. 12, 1940
Ransburg et al, U. S. Patent No. 2,247,963 of July 1, 1941
Gravley, U. S. Patent No. 2,359,476 of Oct. 3, 1944
The London, Edinburgh and Dublin Philosophical Magazine, Volume XXIII, page 490 (1887).
Electrical Experiments by Francis, page 37 (1850).
Zeleny, The Physical Review, Second Series, Vol. III, No. 2 (February, 1914), pages 69-91.
Zeleny, Proceedings of the Cambridge Philosophical Society, Vol. 18, pages 71-83 (1915).
Zeleny, The Physical Review, Second Series, Volume X, No. 1, pages 1-6 (July, 1917).
Zeleny, The Physical Review, Second Series, Volume XVI, No. 2, pages 102-125 (1920).
Zeleny, Journal of the Franklin Institute, Volume 219, No. 6, pages 659-675 (June, 1935).
Proceedings of the Royal Irish Academy, Volume XXXIX, Page 21 (1929).

834 To Show the State of the Prior Art.

Smyser, U. S. Patent No. Re. 22,419 of Jan. 11, 1944
DeVars, U. S. Patent No. 398,327 of Feb. 19, 1889
Simpson, U. S. Patent No. 601,594 of Mar. 29, 1898
Morton, U. S. Patent No. 705,691 of July 29, 1902
Wickson, U. S. Patent No. 735,638 of Aug. 4, 1903
Cooley, U. S. Patent No. 745,276 of Nov. 24, 1903
Fitzgerald, U. S. Patent No. 805,719 of Nov. 28, 1905
Althouse, U. S. Patent No. 1,153,004 of Sept. 7, 1915
Gentile, U. S. Patent No. 1,454,376 of May 8, 1923
Fraser, U. S. Patent No. 1,478,113 of Dec. 18, 1923
Wille et al, U. S. Patent No. 1,638,757 of Aug. 9, 1927
Hampton et al, U. S. Patent No. 1,740,981 of Dec. 24, 1929
Collins, U. S. Patent No. 1,911,808 of May 30, 1933
Formhals, U. S. Patent No. 1,975,504 of Oct. 2, 1934
Morton, U. S. Patent No. 2,048,651 of July 21, 1936
Ronzi, U. S. Patent No. 2,095,651 of Oct. 12, 1937
Meston, U. S. Patent No. 2,097,233 of Oct. 26, 1937
Russell et al, U. S. Patent No. 2,128,327 of Aug. 30, 1938

Wise et al, U. S. Patent No. 2,173,741 of Sept. 19, 1939
Formhals, U. S. Patent No. 2,187,306 of Jan. 16, 1940
Benner et al, U. S. Patent No. 2,191,837 of Feb. 27, 1940
Hill, U. S. Patent No. 2,217,444 of Oct. 8, 1940
Huebner, U. S. Patent No. 2,224,391 of Dec. 10, 1940
Gundelfinger, U. S. Patent No. 2,251,931 of Aug. 12, 1941
Rooney et al, U. S. Patent No. 2,268,622 of Jan. 6, 1942
Branston-Cook, U. S. Patent No. 2,302,289 of Nov. 17, 1942
Kimbal et al, U. S. Patent No. 2,354,688 of Aug. 1, 1944
Wind et al, U. S. Patent No. 2,431,629 of Nov. 25, 1947
Kearsley, U. S. Patent No. 2,438,561 of Mar. 30, 1948
Huebner, U. S. Patent No. 2,451,288 of Oct. 12, 1948
Bennett et al, U. S. Patent No. 2,491,889 of Dec. 20, 1949
Starkey et al, U. S. Patent No. 2,685,536 of Aug. 3, 1954

36. Each of the claims of the Starkey et al. patent No. 2,794,417 is void and invalid and the Defendant is barred from enforcing the same on the following grounds:

835 (a) As lacking invention over what has long been known to be old in the art as set forth hereinabove.

(b) As lacking novelty over the prior art hereinabove set forth which constitutes full justification for the Plaintiff's devices such as that shown in Plaintiff's Drawing SK-661 dated 5-12-54, a copy of which has been furnished Defendant.

(c) As being indefinite, ambiguous and incomplete contrary to the statutory requirement of a full, clear, concise and exact disclosure and definition of the alleged invention.

(d) As involving claims not supported by the specification of said Starkey et al. patent No. 2,794.417.

(e) As involving claims directed to mere aggregations and old combinations of well known features and steps set forth in the prior art hereinabove specified.

(f) As embracing claims constituting a fraud on the public because of the deceptive and misleading character of the description of such claims.

(g) As lacking in originality in the light of the references hereinabove cited which clearly indicate that the Commissioner of Patents exceeded his legal authority in granting said Letters Patent.

(h) As embracing claims broader than the patent disclosure and involving nothing more than ordinary mechanical skill and even at that of a very low order.

(i) As embracing claims wherein the patentees knowingly patented the ideas of others.

(j) As embracing claims in Patent No. 2,794,417 which constitute a double patenting of the alleged invention in view of the earlier issued Starkey et at. patent No. 2,685,536.

836 (k) As embracing claims which set forth nothing more than the obvious apparatus for carrying out the method claims in patent No. 2,685,536.

(l) As embracing claims constituting an illegal extension of the monopoly provided by the earlier issued patent No. 2,685,536.

(m) As embracing claims which are non-statutory in nature in view of the method limitations in claims purportedly directed to apparatus.

(n) As embracing claims so limited and confined during the prosecution of the application in the United States Patent Office that a contention herein that they are infringed by the use of Plaintiff's device, such as that of Plaintiff's drawing SK-661, requires the invoking of the doctrine of "estoppel by limitation."

Third Defense.

37. Plaintiff further alleges that Defendant received knowledge of prior art anticipating one or more claims of the application which issued as Patent No. 2,794,417 prior to the issuance of said patent and withheld such knowledge from the United States Patent Office, and that in the

absence of such knowledge, the Patent Office issued an invalid patent, to the detriment of the public.

38. Plaintiff further alleges that Defendant in failing to disclaim one or more claims of Patent No. 2,794,417 in view of its knowledge of anticipating prior art, is estopped from asserting said patent against Plaintiff.

837 39. Plaintiff further alleges that Defendant is estopped from asserting any interpretation of the claims in Patent No. 2,794,417 which would cover the Plaintiff's airless electrostatic spray coating emitter identified as SK-661 in view in the Defendant's voluntary cancellation of certain claims in the application which issued as Patent No. 2,794,417 and in the earlier companion Patent No. 2,685,536.

Fourth Defense.

40. Defendant has and is presently granting licenses under its patents, including Patent No. 2,794,417 for the practice of a process known as the "No. 2" or airless type process.

41. The Defendant, in granting such licenses under its patents, represents to the trade and in interstate commerce that it exclusively owns the patent monopoly for "electrostatically depositing airlessly atomized (without compressed air) liquid spray particles."

42. The Defendant, in granting its aforesaid licenses under the aforesaid Starkey et al. patent No. 2,685,536 couple with such license agreements a leasing agreement in which it leases equipment for use in practicing the patented process of Starkey et al. patent No. 2,685,536.

43. The Plaintiff, in its marketing of spray equipment, has ascertained that there is a demand in the trade and in interstate commerce for a paint sprayer which will electrostatically atomize paint without making use of air, and, accordingly, fully developed a paint sprayer which it is

capable of manufacturing and selling in order to meet the market demands.

838 44. The Defendant, in a letter dated July 12, 1956, submitted to the Plaintiff its license form Nos. 439 and 440 as being standard forms of Defendant pertaining to the spraying of paint by a sprayer which will electrostatically atomize paint without making use of air.

45. On information and belief, the Plaintiff understands that the Defendant has, in its licensing and leasing program pertaining to electrostatic spraying and beginning about January of 1948 to the date of the commencement of this action, employed 45 different forms of agreement.

46. On information and belief, the Plaintiff understands that up to the filing of the original complaint herein the Defendant has granted 733 licenses on electrostatic spraying, of which 463 were in force and effect on the date of the filing of the complaint herein.

47. (a) Up to the date of the filing of the complaint herein, the Defendant has included in all of its licensing agreements relating to airless electrostatic spray coating a provision requiring the Defendant, as licensor, to furnish a licensee at least some of the equipment employed in the spraying and (b) Defendant has furnished such equipment pursuant to said license agreements.

48. (a) The Defendant, as a part of its aforesaid licenses, renders engineering and technical services to its licensees at least to the extent necessary for the use of the licensed spraying process, and

(b) Such licensees are required to compensate the Defendant licensor for such engineering and technical services by fees and

(c) Such fees have been paid by licensees to Defendant.

839 49. The Defendant, after restricting its Starkey et al. patent No. 2,685,536 to only method claims in the

prosecution of the application from which the patent issued, thereafter wrongfully used such patent contrary to the anti-trust laws for the purpose of tying it with licenses under the method claims of said Starkey et al. patent, leases for unpatented spraying equipment.

50. The Defendant is illegally and in violation of the anti-trust laws employing its Starkey et al. method patent No. 2,685,836 to require the leasing of equipment of Defendant as a condition for a licensee taking a license under the method claims and in so doing has committed acts of unfair competition to the detriment of the public and to the damage of the Plaintiff.

51. The Defendant's entire program of licensing and leasing of electrostatic spraying equipment not only involves an abuse of its patents, but contravenes the spirit and intent of the anti-trust laws in that it enables the Defendant to extend its monopoly in such manner as to monopolize substantially the field of electrostatic spraying and especially that of electrostatic atomization without the use of air.

52. The Defendant is wrongfully using its Starkey et al. patent No. 2,685,536:

(a) To coerce the public into leasing equipment from the Defendant, all to the detriment of the public and ultimate consumer of products processed under the Starkey et al. patent by licensees and lessees and

(b) To coerce manufacturers of spray equipment, 840 such as the Plaintiff, into not making and selling such equipment as is, for example, shown in the aforesaid drawing SK-661 of the Plaintiff.

53. The Defendant, its officers and aforesaid alleged inventors of Starkey et al. patent No. 2,685,536, individually and collectively have conspired with each other and with others in restraint of trade and monopolizing, through patents and illegal agreements, of the electrostatic spray

equipment business in interstate commerce, contrary to the anti-trust and anti-monopoly laws of the United States, and in so doing have committed illegal acts of unfair competition, all to the detriment of the public and to the damage of the Plaintiff.

54. It is further alleged that Defendant should be held estopped from asserting the aforesaid Starkey et al. Patent No. 2,685,536 against the Plaintiff by virtue of the Defendant's unclean hands in its aforesaid wrongful acts in illegal restraint of trade and in contravention of the anti-trust law of the United States of America.

55. (a) Defendant has substantially a complete monopoly in the United States of airless electrostatic liquid spray coating systems in its leasing program;

(b) in which it has coupled the granting of an equipment lease with the granting of a patent license as a single package deal;

(c) in which it has never leased equipment without also requiring the lessee to take a patent license;

(d) in which it has never granted a patent license without at the same time leasing equipment;

841 (e) in which it has required lessees as a condition to receiving leased equipment to pay an initial fee of thousands of dollars which more than compensated Defendant for the cost of manufacturing the equipment furnished;

(f) in which it has required lessees to turn over to Defendant patent licenses on inventions made or acquired by such lessees relating to the leased system;

(g) in which it has in its composite lease and license forms of agreement required recognition of the validity of not only patents taken out by Defendant but also of any patent rights acquired by Defendant from third parties;

(h) in which it has required lessees to accept a termination provision in leases which required the lessee, upon termination of the lease, to

surrender to Defendant all of the leased equipment without receiving any refund for the initial fee of thousands of dollars paid by the lessee;

(i) in which Defendant has provided in its composite lease and license agreement forms for the furnishing by Defendant of services and replacement parts to the lessees;

(j) in which Defendant has included in the leased equipment numerous unpatented parts not embraced by the claims of the Starkey et al. Letters Patent No. 2,685,536;

(k) in which in its leases, Defendant has received full compensation, dollar-wise, for the manufacturing cost of the major item of the equipment leased, namely the power pack which is not covered by any of the claims of the Starkey et al. Letters Patent No. 2,685,536;

(l) in which Defendant has, in certain of its leases, granted more favorable terms to paint or coating material manufacturers who in turn recommended the Defendant's leased system in their advertising;

842 (m) in which Defendant has refused to grant spray equipment manufacturers such as the Plaintiff herein, a license under the Starkey et al. patent No. 2,685,536 unless such manufacturers sell the licensed spray equipment only to customers licensed by Defendant;

(n) in which Defendant in its license-lease agreements did not specifically identify by number any of its patents which applied directly to the equipment being leased, thus requiring licensees to recognize the validity of any patents considered by Defendant to be applicable; even though not identified; and

(o) in which Defendant has required the payment of a fee for the use of reciprocators in its leased systems even where Defendant did not supply such reciprocators to the lessee.

56. The Defendant has

(a) engaged in interstate commerce; and

(b) in the course of such commerce leased electrostatic spray coating equipment for use within the United States;

(c) said leasing being on the condition, agreement, or understanding that the lessee should not use or deal in the equipment of a competitor or competitors of Defendant; and

(d) thereby lessened competition or tended to create a monopoly in the field of electrostatic spray coating equipment.

57. Defendant has illegally exploited the Patent System of the United States by acquiring patent rights from outside the Defendant's organization for the purpose of restricting entry of competitors into the field of electrostatic spray coating equipment.

58. Defendant has extended its monopoly in the field of electrostatic spray coating equipment by requiring licensees, as a condition for receiving a license, to license back to Defendant, royalty-free, patent rights in inventions made in the airless electrostatic spray coating field by such licensees.

843 59. Defendant has secured patent rights from outside parties for the purpose of intimidating and overwhelming and coercing the trade into dealing only with the Defendant.

60. Defendant's predecessor, Harper J. Ransburg Company, entered into an agreement in restraint of trade with the Behr-Manning Corporation dividing the field of electrostatic coating between the parties thereto. Defendant has succeeded to all of said predecessor's rights under said agreement, and in furtherance of the purposes thereof, has coerced the trade into dealing only with Defendant in the field of electrostatic spray coating of liquids.

61. Defendant, by licensing its patents only as a pack-

age, has enlarged the patent monopoly of particular patents for the exploitation of the monopoly of its other patents.

62. Defendant, by licensing its patents only as a package, has enlarged the patent monopoly of particular patents for the exploitation or promotion of a business not within the patents.

63. Defendant, through its license and lease agreements, has created a perpetual monopoly in the field of electrostatic spray coating equipment, said monopoly extending beyond the term of any of Defendant's patents which may apply to such equipment.

64. As far as Plaintiff is advised, Defendant owns 100% or substantially 100% of all airless electrostatic spray coating systems in use in the United States. Defendant does not sell such systems to users.

844 65. By its policy of leasing, but not selling, airless electrostatic spray coating systems, and imposing the conditions recited in such leases, Defendant has restrained the development and growth in the United States of business in:

(a) making and selling repair and replacement parts for such systems; and
(b) buying and selling used airless electrostatic spray coating systems.

66. Defendant, in its leases, exerts substantially complete monopolistic control over its lessees by:

(a) requiring lessees to license back to Defendant, royalty-free, all inventions made in the field of electrostatic spray coating by such lessees
(b) retaining the right to cancel such leases and remove the leased equipment from the premises of the lessee, without cause
(c) retaining the right to make changes in the equipment supplied to lessees

(d) making it economically impossible for lessees to procure replacement parts for the equipment on the open market

(e) making it economically impossible for lessees to secure servicing of such equipment in the open market

(f) making it impossible for its licensees to divest themselves of defendant's equipment without suffering a complete loss of their investment in such equipment.

Fifth Defense

67. (a) As admitted by the Defendant, it received Plaintiff's letter dated July 25, 1956, together with a copy of Plaintiff's drawing SK-661, showing the airless electrostatic emitter which had been developed by Plaintiff, and

(b) shortly after receipt of said letter by Defendant 845 on or about July 26, 1956, Defendant communicated the subject matter of said Plaintiff's SK-661 electrostatic emitter to its patent counsel, Schroeder, Hofgren, Brady and Wegner.

68. Following Plaintiff's disclosures of the SK-661 airless electrostatic emitter of Plaintiff to Defendant's patent counsel (the law firm of Schroeder, Hofgren, Brady and Wegner), William J. Stellman of said firm, on behalf of Defendant went to Washington and interviewed the Examiner in charge of the examination of the Starkey et al. application, Serial No. 434,366, from which Defendant's apparatus patent No. 2,794,417 in suit issued, and (b) pursuant to such interview presented an Amendment "C" to such application, dated August 23, 1956, adding to the application Claim 18, which now corresponds to Claim 4 of the patent, which is the only claim of said patent specifically alleged herein by the Defendant to be infringed by Plaintiff, which infringement is denied by Plaintiff.

69. That oral instructions were given to Defendant's

patent counsel by Defendant's vice president, E. M. Ransburg, between August 8 and August 21, 1956, as to the filing of Amendment "C" presenting Claim 18 in the Starkey et al. application, Serial No. 434,366, from which the Starkey et al. Patent No. 2,794,417 issued with such claim as Claim 4.

70. That prior to the filing of Amendment "C" on or about August 23, 1956, in connection with application Serial No. 434,366, from which the Starkey et al. apparatus patent No. 2,794,417 issued and in which amendment Claim 18, (corresponding to Claim 4 of the patent in suit), was
846 presented, no claims had ever been presented in that application or any other patent application of the Defendant on an airless electrostatic spray coating apparatus wherein in describing the spaced atomizing points, the expression "sufficiently close to permit the coating material to bridge the spaces therebetween" was employed, (b) that Defendant did not adopt such language in any patent claims until after Plaintiff's SK-661 airless electrostatic emitter development had been disclosed to Defendant on or about July 26, 1956, and (c) that even then such vague and indefinite language was only adopted as a means of obtaining an additional claim with which to harass Plaintiff with an unwarranted charge of infringement.

71. Defendant, after having had disclosed to it on or about July 26, 1956, by Plaintiff the SK-661 airless electrostatic emitter development proprietary to Plaintiff, proceeded in secrecy to present for the first time a claim in a then pending patent application of Defendant (Claim 18, now corresponding to its apparatus patent Claim 4), claiming spraying apparatus in a vague and indefinite manner never claimed before by it and in the light of Plaintiff's disclosure to Defendant.

72. (a) Plaintiff's specific design of SK-661 airless

electrostatic emitter was developed by Plaintiff as a result of a research and development program over a period of several years costing in excess of $40,000.00, and (b) such emitter and information as to the structural details of the same was proprietary to Plaintiff and (c) was, at the time of its disclosure to Defendant, the subject of a 847 patent application (Serial No. 449,697, filed August 13, 1954) pending and maintained in secret in the United States Patent Office.

73. In 1956, as well as at the time of its disclosure to Defendant, Plaintiff's SK-661 airless electrostatic emitter was not generally known publicly, as it had not as yet been sold or publicized by Plaintiff.

74. The disclosure of Plaintiff's SK-661 emitter, which was the subject of a pending secret patent application of Plaintiff, was made to Defendant in 1956 as a new, confidential proprietary development of Plaintiff only for the specific purpose of ascertaining whether Defendant claimed it had any patents covering same, and if so, whether a license to manufacture and sell such an emitter could be had by Plaintiff.

75. Defendant acted inequitably and in an unethical business manner in its surreptitious and secret activities, taking unfair competitive advantage of Plaintiff's confidential disclosure in good faith of its proprietory SK-661 development in Defendant's wrongful appropriations of such disclosure to its own advantage in the drafting and procurement of patent Claim 4 of patent No. 2,794,417, in the light of such disclosure.

76. The aforesaid wrongful activities of the Defendant in its procurement of its patent No. 2,794,417 are all part of the plan of the Defendant to monopolize illegally the market, and to extend and unduly protract patent 848 monopolies in the field of airless electrostatic spraying to the ultimate end of discouraging all competition.

77. Defendant is estopped by its aforesaid inequitable

and unconscionable conduct from enforcing such Claim 4 of its patent No. 2,794,417 against Plaintiff, and (b) it should not be permitted to profit by its wrongful and inequitable conduct to the detriment and damage of Plaintiff.

Wherefore, Plaintiff prays:

That the Defendant take nothing by its Substituted Supplemental Counterclaim;

That the Defendant be ordered to purge itself of its wrongful and illegal conduct in the licensing and leasing program with respect to electrostatic spraying by dissipating the effects of its wrongful conduct;

That the Starkey et al. patent No. 2,794,417 be held non-infringed by any of the Plaintiff's spraying equipment;

That the Starkey et al. patent No. 2,794,417 be held invalid and a nullity from its inception;

That Defendant be held equitably estopped from asserting Claim 4 of its Patent No. 2,794,417;

The the Court grant to the Plaintiff such other and further relief as it may deem just and equitable.

Harold B. Hood,
1001 Hume Mansur Building,
Indianapolis 4, Indiana,

Charles F. Meroni,
Otto R. Krause,
Hill, Sherman, Meroni, Gross & Simpson,
53 West Jackson Blvd.,
Chicago 4, Illinois,
Attorneys for Plaintiff.

Receipt of four (4) copies of the above and foregoing substituted Answer to Defendant's Counterclaim is hereby acknowledged this 19th day of November, 1958.

V. A. Trask,
Attorney for Defendant.

849 IN THE UNITED STATES DISTRICT COURT.
(Caption—56-C-262)

PLAINTIFF'S SUBSTITUTED CROSS-COUNTERCLAIM.

(Original filed December 10, 1956.)

Now comes the Plaintiff Binks Manufacturing Company, a Delaware Corporation, having its principal office and place of business at Chicago, Illinois, and in support of its Cross-Counterclaim avers:

1. Jurisdiction of this court as to the subject matter of the Cross-Counterclaim is founded under the antitrust and anti-monopoly laws of the United States (15 U. S. C., Sec. 1, 2, 14 and 15).

2. The acts herein complained of were and are being committed within this District and elsewhere in the United States and in interstate commerce and the amount in controversy is in excess of three thousand dollars.

3. The Plaintiff, Binks Manufacturing Company, is a corporation organized and existing under the laws of the State of Delaware and has its principal office and place of business at 3114-40 West Carroll Avenue, Chicago 12, Illinois.

4. Defendant, Ransburg Electro-Coating Corpora-
850 tion, is a corporation organized and existing under the laws of the State of Indiana and has its principal office and place of business at Barth and Sanders Streets, Indianapolis 7, Indiana.

5. The Plaintiff, has for many years and is presently manufacturing and selling spraying equipment for paint and other materials in this District and elsewhere in the United States.

6. The Defendant has for a number of years and is

presently licensing under its United States Letters Patents processes for electrostatically spraying pain and leases equipment adapted to practice such processes, the products made under such licenses and by such equipment being widely used in interstate commerce throughout the United States.

7. On August 3, 1954, the Defendant was issued United States Letters Patent No. 2,685,536, entitled "Method For Electrostatically Coating Articles", on an application for patent filed on September 29, 1944, in the names of William A. Starkey and Edwin M. Ransburg, which patent is owned by Defendant.

8. On June 4, 1957, the Defendant was issued United States Letters Patent No. 2,794,417, entitled "Apparatus For Electrostatically Coating Articles" on an application filed June 4, 1954, based upon the aforesaid application filed September 29, 1944, in the names of William A. Starkey and Edwin M. Ransburg, which patent is owned by Defendant.

9. Defendant has and is presently granting licenses under the aforesaid Starkey et al. patents for using the method of process thereof and which process is known as the "No. 2" or airless type process.

10. The Defendant, in granting such licenses under its patents, including the aforesaid Starkey et al. patents, represents to the trade and in interstate commerce that it exclusively owns the patent monopoly for "electrostatically depositing airlessly atomized (without compressed air) liquid spray particles".

11. The Defendant, in granting its aforesaid licenses under the aforesaid Starkey et al. patents, couples with such license agreement a leasing agreement in which it leases equipment for use in practicing its aforesaid patented process of Starkey et al. patent No. 2,685,536.

12. The Plaintiff, in its marketing of spray equipment,

has ascertained that there is a demand in the trade and in interstate commerce for a paint sprayer which will electrostatically atomize paint without making use of air, and, accordingly, fully developed a paint sprayer which it is capable of manufacturing and selling in order to meet the market demands.

13. The Defendant, in a letter dated July 12, 1956, submitted to the Plaintiff its license forms Nos. 439 and 440 as being standard forms of Defendant pertaining to the spraying of paint by a sprayer which will electrostatically atomize paint without making use of air.

14. On information and belief, the Plaintiff understands that the Defendant has, in its licensing and leasing program pertaining to electrostatic spraying and beginning about January of 1948 to the date of the commencement of this action, employed 45 different forms of agreement.

852

15. On information and belief, the Plaintiff understands that up to the filing of the original complaint herein the Defendant has granted 733 licenses on the electrostatic spraying, of which 463 were in force and effect on the date of the filing of the complaint herein.

16. (a) Up to the date of the filing of the complaint herein, the Defendant has included in all of its licensing agreements relating to airless electrostatic spray coating a provision requiring the Defendant, as licensor, to furnish to licensee at least some of the equipment employed in the spraying, and (b) Defendant has furnished such equipment pursuant to said license agreements.

17. (a) The Defendant, as a part of its aforesaid licenses, renders engineering and technical services to its licensees at least to the extent necessary for the use of the licensed spraying process, and

(b) such licensees are required to compensate the De-

fendant licensor for such engineering and technical services by fees, and

(c) such fees have been paid by licensees to Defendant.

18. Plaintiff is advised that it is the Defendant's position that the use of the Plaintiff's equipment shown in Plaintiff's drawing SK-661 for the electrostatic airless atomization of liquid spray particles constitutes an infringement of Defendant's Starkey et al. patent No. 2,685,536.

852 19. The Defendant, after restricting its Starkey et al. patent No. 2,685,536 to only method claims in the prosecution of the application from which the patent issued, thereafter wrongfully used such patent contrary to the antitrust laws for the purpose of tying in with licenses under the method claims of said Starkey et al. patent leases for unpatented spraying equipment.

20. The Defendant is illegally and in violation of the antitrust laws employing its Starkey et al. method patent to require the leasing of equipment of Defendant as condition for a licensee taking a license under the method claims and in so doing has committed acts of unfair competition to the detriment of the public and to the damage of the Plaintiff.

21. The Defendant's entire program of licensing and leasing of electrostatic spraying equipment not only involves an abuse of its patents, but contravenes the spirit and intent of the antitrust laws in that it enables the Defendant to extend its monopoly in such manner as to monopolize substantially the field of electrostatic spraying and especially that of electrostatic atomization without the use of air.

22. The Defendant is wrongfully using its Starkey et al. patents Nos. 2,685,536 and 2,794,417

(a) to coerce the public into leasing equipment from the Defendant, all to the detriment of the public and ulti-

mate consumer of products processed under the Starkey et al. patents by licenses and leases, and

(b) to coerce manufacturers of spray equipment, such as the Plaintiff, into not making and selling such
854 equipment as is, for example, shown in the aforesaid drawing SK-661 of the Plaintiff.

23. The Defendant, its officers and aforesaid alleged inventors of Starkey et al. patents, individually and collectively, have conspired with each other and with others in restraint of trade and monopolizing, through patents and illegal agreements, of the electrostatic spray equipment business in interstate commerce, contrary to the antitrust and anti-monopoly laws of the United States, and in so doing have committed illegal acts of unfair competition, all to the detriment of the public and to the damage of the Plaintiff.

24. It is further alleged that Defendant should be held estopped from asserting the aforesaid Starkey et al. Patent Nos. 2,685,536 and 2,794,417 against the Plaintiff by virtue of the Defendant's aforesaid wrongful acts in illegal restraint of trade and in contravention of the antitrust laws of the United States of America.

25. (a) Defendant has substantially a complete monopoly in the United States of airless electrostatic liquid spray coating systems in its leasing program;

(b) in which it has coupled the granting of an equipment lease with the granting of a patent license as a single package deal;

(c) in which it has never leased equipment without also requiring the lessee to take a patent license;

(d) in which it has never granted a patent license without at the same time leasing equipment;

855 (e) in which it has required lessees as a condition to receiving leased equipment to pay an initial fee of thousands of dollars which more than com-

pensated Defendant for the cost of manufacturing the equipment furnished;

(f) in which it has required lessees to turn over to Defendant patent licenses on inventions made or acquired by such lessees relating to the leased system;

(g) in which it has in its composite lease and license forms of agreement required recognition of the validity of not only patents taken out by Defendant but also of any patent rights acquired by Defendant from third parties;

(h) in which it has required lessees to accept a termination provision in leases which required the lessee, upon termination of the lease, to surrender to Defendant all of the leased equipment without receiving any refund for the initial fee of thousands of dollars paid by the lessee;

(i) in which Defendant has provided in its composite lease and license agreement forms for the furnishing by Defendant of services and replacement parts to the lessees;

(j) in which Defendant has included in the leased equipment numerous unpatented parts not embraced by the claims of the Starkey et al. letters patents in suit;

(k) in which in its leases, Defendant has received full compensation, dollarwise, for the manufacturing cost of the major item of the equipment leased, namely the power pack, which is not covered by any of the claims of the Starkey et al. letters patents in suit;

(l) in which Defendant has, in certain of its leases, granted more favoable terms to paint or coating material manufacturers who in turn recommended the Defendant's leased system in their advertising;

(m) in which Defendant has refused to grant spray
856 equipment manufacturers, such as the Plaintiff herein, a license under the Starkey et al. patents in suit unless such manufacturers sell the licensed spray equipment only to customers licensed by defendant;

(n) in which Defendant in its license-lease agreements did not specifically identify by number any of its patents which applied directly to the equipment being leased, thus requiring licensees to recognize the validity of any patents considered by Defendant to be applicable, even though not identified; and

(o) in which Defendant has required the payment of a fee for the use of reciprocators in its leased systems even where Defendant did not supply such reciprocators to the lessee.

26. The Defendant has

(a) engaged in interstate commerce; and

(b) in the course of such commerce leased electrostatic spray coating equipment for use within the United States;

(c) said leasing being on the condition, agreement, or understanding that the lessee should not use or deal in the equipment of a competitor or competitors of Defendant; and

(d) thereby lessened competition or tended to create a monopoly in the field of electrostatic spray coating equipment.

27. Defendant has illegally exploited the Patent System of the United States by acquiring patent rights from outside the Defendant's organization for the purpose of restricting entry of competitors into the field of electrostatic spray coating equipment.

28. Defendant has extended its monopoly in the field of electrostatic spray coating equipment by requiring licensees, as a condition for receiving a license, to license 857 back to Defendant royalty-free, patent rights in inventions made in the airless electrostatic spray coating field by such licensees.

29. Defendant has secured patent rights from outside parties for the purpose of intimidating and overwhelming and coercing the trade into dealing only with the Defendant.

30. Defendant's predecessor, Harper J. Ransburg Company, entered into an agreement in restraint of trade with the Behr-Manning Corporation dividing the field of electrostatic coating between the parties thereto. Defendant has succeeded to all of said predecessor's rights under said agreement, and in furtherance of the purposes thereof, has coerced the trade into dealing only with Defendant in the field of electrostatic spray coating of liquids.

31. Defendant, by licensing its patents only as a package, has enlarged the patent monopoly of particular patents for the exploitation of the monopoly of its other patents.

32. Defendant, by licensing its patents only as a package, has enlarged the patent monopoly of particular patents for the exploitation or promotion of a business not within the patents.

33. Defendant, through its license and lease agreements, has created a perpetual monopoly in the field of electrostatic spray coating equipment, said monopoly extending beyond the term of any of Defendant's patents which may apply to such equipment.

34. As far as Plaintiff is advised, Defendant owns 858 100% or substantially 100% of all airless electrostatic spray coating systems in use in the United States. Defendant does not sell such systems to users.

35. By its policy of leasing, but not selling, airless electrostatic spray coating systems, and imposing the conditions recited in such leases, Defendant has restrained the development and growth in the United States of business in:

(a) making and selling repair and replacement parts for such systems; and

(b) buying and selling used airless electrostatic spray coating systems.

36. Defendant, in its leases, exerts substantially complete monopolistic control over its lessees by:

(a) requiring lessees to license back to Defendant, royalty-free, all inventions made in the field of airless electrostatic spray coating by such lessees;

(b) retaining the right to cancel such leases and remove the leased equipment from the premises of the lessee, without cause;

(c) retaining the right to make changes in the equipment supplied to lessees;

(d) making it economically impossible for lessees to procure replacement parts for the equipment on the open market;

(e) making it economically impossible for lessees to secure servicing of such equipment in the open market;

(f) making it impossible for its licensees to divest themselves of defendant's equipment without suffering a complete loss of their investment in such equipment.

37. Plaintiff further alleges Defendant wrongfully procured its Letters Patents Nos. 2,685,536 and 2,794,417 859 by unfrue representations in connection with their procurement, all to the end of furthering its program of unfair competition, illegal restraint of trade, and violation of the United States antitrust laws.

38. Defendant's licensing program in airless electrostatic spray coating to the extent that it is based upon the Starkey et al. patents Nos. 2,685,536 and 2,794,417, is in violation of the United States antitrust laws, since said patents are invalid:

(a) As lacking novelty over the prior art;

(b) As being indefinite, ambiguous and incomplete;

(c) As involving claims not supported by the specifications of said patents;

(d) As involving claims directed to mere aggregations and old combinations;

(e) As embracing claims constituting a fraud on the public because of the deceptive and misleading character of the descriptions of such claims;

(f) As embracing claims broader than the patent disclosures;

(g) As embracing claims wherein the patentees knowingly patented the ideas of others; and

(b) As embracing claims constituting double patenting over previously issued patents.

Wherefore, Plaintiff prays:

A. That an injunction be issued by this Court restraining the Defendant, their agents, officers, servants, employees, and attorneys from using the Defendant's patents, including the said Starkey et al. Patents in suit, from monopolizing and restraining trade in interstate commerce, and from wrongfully employing said patents by threatening to or suing Plaintiff or any of its customers for infringement thereof, and from attempting to enjoy the monopoly of said patents by an agregegation thereof or otherwise and from interfering or attempting to interfere with or damage the business of the Plaintiff in interstate commerce contrary to the antitrust, anti-monopoly and restraint of trade laws of the United States.

B. For a judgment under the provisions of Section 15, Title 15, of the United States Code for three-fold the damages sustained by the Plaintiff, the costs of this suit, and reasonable attorneys' fees as provided.

C. That the Defendant be required to account to the Plaintiff for loss of profits and damages sustained by reason of Defendant's unlawful conduct.

D. The Court grant the Plaintiff such other and further relief as it may deem just and equitable.

Harold B. Hood,
1001 Hume-Mansur Building,
Indianapolis 4, Indiana,
Charles F. Meroni,
Otto R. Krause,
Hill, Sherman, Meroni, Gross & Simpson,
53 West Jackson Boulevard,
Chicago 4, Illinois,
Attorneys for Plaintiff.

Receipt of four (4) copies of the above and foregoing substituted Cross-Counterclaim is acknowledged this 19th day of November, 1958.

V. A. Trask,

Attorney for Defendant.

885 United States District Court

(Caption—56-C262)

DEFENDANT'S SUBSTITUTED ANSWER TO PLAINTIFF'S SUBSTITUTED CROSS-COUNTER-CLAIM.

(Original Filed February 18, 1957).

First Defense.

For its First Defense, Defendant Ransburg Electro-Coating Corp. answers Plaintiff's Cross-Counterclaim as follows:

1. Defendant admits the averments of Paragraph 1.

2. Defendant admits the averment in Paragraph 2 that "the amount in controversey is in excess of three thousand dollars," and denies the remaining averments of Paragraph 2.

3. Defendant admits the averments of Paragraph 3.

4. Defendant admits the averments of Paragraph 4.

5. Defendant admits the averments of Paragraph 5.

6. Defendant admits the averment in Paragraph 6 that "The Defendant has for a number of years and is presently licensing under its United States Letters Patents processes for electrostatically" spray painting articles "and sells leases equipment adapted to practice such processes, the products made under such licenses and by such equipment being widely used in interstate commerce

throughout the United States." Defendant denies the remaining averments of Paragraph 6

7. Defendant admits the averments of Paragraph 7.

8. Defendant admits the averments of Paragraph 8.

9. Defendant admits the averment in Paragraph 9 that "Defendant has and is presently granting licenses under the aforesaid Starkey et al. patents," and that such licenses under Starkey Patent No. 2,685,536 are "for using the method or process thereof and which process is known as the 'No. 2' or airless type process." Defendant denies the remaining averments of Paragraph 9.

10. Defendant denies the averments of Paragraph 10.

11. Defendant denies the averments of Paragraph 11.

12. Defendant admits the averment in Paragraph 12 that the Plaintiff has "developed a paint sprayer which it is capable of manufacturing." Defendan lenies the remaining averments of Paragraph 12.

13. Defendant admits the averment in Paragraph 13 that "The Defendant, in a letter dated July 12, 1956, submitted to the Plaintiff its license forms Nos. 439 and 440 as b ing standard forms of Defendant." Defendant denies the remaining averments of Paragraph 13.

14. Defendant admits the averment in Paragraph 14 that "On information and belief, the Plaintiff understands that the Defendant has, in its licensing and leasing program" and "beginning about January of 1948 to the date of the commencement of this action, employed 45 different forms of agreement." Defendant denies the remaining averments of Paragraph 14.

15. Defendant admits the averment in Paragraph 15 that "On information and belief, the Plaintiff understands that up to the filing of the original complaint herein the Defendant has granted 733 licenses" and "of which 463

were in force and effect on the date of the filing of the complaint herein." Defendant denies the remaining averments of Paragraph 15.

16. Defendant admits the averments of Paragraph 16.

17. Defendant admits the averments of Paragraph 17.

18. Defendant denies the averments in Paragraph 18.

19. Defendant denies the averments of Paragraph 19.

20. Defendant denies the averments of Paragraph 20.

21. Defendant denies the averments of Paragraph 21.

22. Defendant denies the averments of Paragraph 22.

23. Defendant denies the averments of Paragraph 23.

24. Defendant denies the averments of Paragraph 24.

25. Defendant admits the averment in Paragraph 25 (d) that " it has never granted a patent license without at the same time leasing equipment;".

Defendant admits the averment in Paragraph 25 (h) that "it has required lessees to accept a termination provision in leases which required the lessee, upon termination of the lease, to surrender to Defendant all of the leased equipment without receiving any refund for the initial fee of thousands of dollars paid by the lessee;".

Defendant admits the averments in Paragraph 25 (i) that "Defendant has provided in its composite lease and license agreement forms for the furnishing by Defendant of services and replacement parts to the lessees;".

Defendant denies the remaining averments of Paragraph 25.

26. Defendant admits the averments in Paragraph 26(a) and (b). Defendant denies the averments of Paragraphs 26(c) and (d).

27. Defendant denies the averments of Paragraph 27.

28. Defendant denies the averments of Paragraph 28.

29. Defendant admits the averment in Paragraph 29 that "Defendant has secured patent rights from outside parties." Defendant denies the remaining averments of Paragraph 29.

30. Defendant admits the averment in Paragraph 30 that "Defendant's predecessor, Harper J. Ransburg Company, entered into an agreement" • • • "with the Behr-Manning Corporation," and that "Defendant has succeeded to all of said predecessor's rights under said agreement." Defendant denies the remaining averments of Paragraph 30.

31. Defendant denies the averments of Paragraph 31.

32. Defendant denies the averments of Paragraph 32.

33. Defendant denies the averments of Paragraph 33.

34. Defendant admits the averment in Paragraph 34 that "Defendant does not sell such systems to users." Defendant denies the remaining averments of Paragraph 34.

35. Defendant denies the averments of Paragraph 35.

36. Defendant denies the averments of Paragraph 36.

37. Defendant denies the averments of Paragraph 37.

38. Defendant denies the averments of Paragraph 38.

Second Defense.

For its Second Defense, Defendant answers Plaintiff's Cross-Counterclaim as follows:

1. The relief sought in Paragraph B of the Prayer of Plaintiff's Cross-Counterclaim for treble damages under the provisions of Section 15, Title 15, of the United States Code, being an action to recover a penalty, the same is barred by the statute of limitations to the extent to which

said cause of action accrued more than two years prior to December 10, 1956, the date of the filing of said Cross-Counterclaim herein.

Ransburg Electro-Coating Corp.
By Verne A. Tfask,
801 Hume-Mansur Building,
Indianapolis 4, Indiana.
Attorney for Defendant.

Of Counsel:

Elbert R. Gilliom,
1340-1344 Consolidated Building,
Indianapolis 4, Indiana,

Harry T. Ice,
951 Consolidated Building,
Indianapolis 4, Indiana,

James P. Hume,
First National Bank Building,
38 South Dearborn Street,
Chicago 3, Illinois.

Acknowledgment of Service.

Service of copies of the foregoing Defendant's Substituted Answer to Plaintiff's Substituted Cross-Counterclaim (Original Filed February 18, 1957) is acknowledged this 26th day of November, 1958.

Harold B. Hood, by CDE
Counsel for Plaintiff.

INTERROGATORIES AND ANSWERS.

1

Plaintiff's Interrogatories	Answer
2. (a) Has defendant, in its licensing program, granted any licenses in which the licensee was licensed under both patents relating to electrostatic spraying with air and without the use of air and, if so,	2. (a) Certain of defendant's licensees have held or now hold, concurrently, licenses from defendant to electrostatically spray coat both with air and without the use of air.
(b) what is the identity and date of each of such licenses?	(b) See list, Exhibit "A" attached.
3. (a) How many licenses have been granted by defendant on electrostatic spraying,	3. (a) 732, up to the date of the filing of the complaint.
(b) how many of those licenses are still in force and effect and	(b) 463, up to the date of the filing of the complaint.
(c) what are the dates of all licenses that have been granted and the names of the licensees of all such licenses?	(c) Exhibit "B", attached lists the names and locations of the licensees and the dates of all licenses granted by defendant up to the date of the filing of the complaint for electrostatic spray coating or articles. In addition to the licenses identified in Exhibit "B," defendant on commencement of business acquired from its predecessor in business a number of licenses with companies engaged in electrostatic spray coating of articles.
4. (a) Has the defendant ever granted a patient license relating to airless electrostatic spraying as to which it did not enter into a lease agreement with the licensee and, if so,	4. (a) To date all agreements by which defendant has licensed the use of its airless electrostatic spray coating process contain a provision requiring defendant to furnish to the licensee some, but not all, of the equipment for using the process.
7. (a) Is it not a fact that the defendant, in its licensing and leasing program, repeatedly made changes in its licenses and leases and, if so,	7. (a) Yes.
(b) did existent licensees get the benefit of such changes and	(b) In certain instances.
(c) who were such licensees?	(c) See list, Exhibit "C" attached.
8. (a) How many different forms of licenses and leases has the defendant used in its licensing and leasing program,	8. (a) (b) and (c) All of defendant's agreement forms relating to electrostatically spray coating of articles are attached as Exhibits D-1 through D-45 and such exhibits are self-explanatory.
(b) what is the date that each the same was adopted and	
(c) what is the number or other identity given to each form of lease and license?	

2

Plaintiff's Interrogatories	Answer
10. What part of the defendant's cost of each piece of leased equipment is recovered by the defendant at the time of its granting a lease and a license under its patents?	10. All of it.
11. (a) Does the defendant, as a part of its patent licensing and leasing program, render engineering and technical services to its licensees and, if so,	11. (a) Yes.
(b) to what extent and	(b) To all licensees to the extent necessary for their effective use of the process.
(c) wherein is defendant compensated for same?	(c) From fees paid by licensees.
12. (a) Does the defendant know of any other supplier in the trade in the United States of America of wireless electrostatic spraying equipment, and if so,	12. (a) No, not as a unit.
(b) What is the name or names of such other supplier or suppliers and	(b) No answer required.
(c) where is such supplier located?	(c) No answer required.
14. (a) Does the defendant apply any patent markings to its leased electrostatic spraying equipment and, if so,	14. (a) No.
(b) what does the marking include in each instance?	(b) No answer required.
16. (a) Does the defendant know of anyone else in the United States of America that is manufacturing and selling electrostatic spraying equipment for atomizing liquid into discrete particles without the use of air and, if so,	16. (a) No.
(b) what is the name of such manufacturer and	(b) No answer required.
(c) where is such manufacturer located?	(c) No answer required.
17. (a) Has the defendant, in addition to leasing its electrostatic equipment for atomizing liquid into discrete particles without the use of air, also sold such equipment to the trade and, if so,	17. (a) No.
(b) to whom	(b) No answer required.
(c) when was such sale made and	(c) No answer required.
(d) did such equipment have a patent marking indicating Starkey Patent No. 2,685,536?	(d) No answer required.

3

Plaintiff's Interrogatories	Answer
20. (a) Has any licensee of defendant under the Starkey patent No. 2,685,536 ever paid any royalties to defendant on a practicing of the patented Starkey process with any equipment other than what was leased by defendant and, if so,	20. (a) All licensees under Starkey patent 2,685,536 who have paid royalties to defendant have been furnished by defendant some equipment for use in the licensed process. In all instances such licensees also obtained from other sources additional equipment for use in the licensed process.
(b) who made such payment or payments and	(b) No answer required.
(c) when?	(c) No answer required.
21. (a) What is the lowest voltage the defendant has ever used in conjunction with *airless* electrostatic spraying equipment at which it obtained atomization of the particular liquid being sprayed,	21. (a) Defendant has electrostatically atomized conventional liquid coating materials commercially at a voltage as low as approximately 20,000 volts.
(b) when and	(b) December, 1955 and subsequently.
(c) where was such spraying conducted?	(c) 1234 Barth Avenue, Indianapolis, Indiana and subsequently at other places.
22. (a) What was the highest voltage the defendant has ever used in conjunction with its *air type* of electrostatic spraying equipment,	22. (a) Defendant's electrostatic coating processes using compressed air spray have been operated commercially at a voltage as high as approximately 90,000 volts.
(b) when and	(b) July, 1951 and subsequently.
(c) where was such equipment operated?	(c) Roberts Manufacturing Company, Cleburne, Texas and subsequently at other places.
23. (a) Is it not a fact that the voltage at which atomization occurs in the use of defendant's aforesaid airless electrostatic spraying process depends upon the nature of the liquid being sprayed and	23. (a) Electrostatic atomization of a given liquid occurs over a wide range of voltages, all other conditions being the same. The size of the particles so atomized depends to an extent on the nature of the liquid, under conditions of constant voltage and with all other factors constant.
(b) that generally the voltage required increases with the viscosity of the liquid and	(b) The degree of atomization usually suffers i.e., the particles become larger, as the viscosity of liquid being electrostatically atomized increases, other factors being maintained constant. However, it does not follow that deterioration of atomization resulting from increases in viscosity can be overcome merely by increasing the voltage applied.

4

Plaintiff's Interrogatories	Answer
(23 cont'd) .	(23 cont'd)
(c) what are the upper and lower limits of the voltage at which atomization can occur in the use of said process in the spraying of all different types of liquid handled thereby?	(c) As indicated in the above answer to portion (a) of this interrogatory, electrostatic atomization of a given liquid occurs over a wide range of voltages, the extreme limits of which defendant has not explored.
24. (a) Will defendant's aforesaid airless electrostatic spraying process atomize all kinds of known liquid and, if not,	24. (a) No.
(b) what are the limits of the range of liquids that can be atomized by such spraying process?	(b) Defendant does not know the limits of the range of liquids which can be atomized by such spraying process.
25. (a) Does temperature constitute a factor in the spraying of a liquid by defendant's aforesaid process of airless electrostatic spraying and, if so,	25. (a) Temperature of the liquid constitutes a factor in the spraying of the liquid in defendant's process of airless electrostatic spray coating.
(b) to what extent and	(b) To the extent that influences viscosity.
(c) if a range of temperatures is involved, what is the range?	(c) Defendant has not explored the limits of the range of temperatures involved.
26. In the use of defendant's aforesaid process of airless electrostatic spraying, when is a liquid particle a discrete particle from the standpoint of the practice of defendant's process?	26. In the use of defendant's process of airless electrostatic spray coating, the liquid particles formed as a result of atomization are discrete particles since they are separate, individually distinct, minute entities.
27. (a) What is the earliest date of invention as to Starkey Patent No. 2,685,536 that defendant will rely upon herein and	27. (a) As at present advised, on or about October 8, 1943.
(b) what are the activities there involved and	(b) and (c) Experiment involving electrostatic atomization of paint on or about October 8, 1943; disclosure to others on or about October 8, 1943 and subsequently; notebook entry and sketch by October 29, 1943; further tests on November 5 and 9, 1943; drawing of apparatus in operation on November 10, 1943; and additional operations of the process and testing of various apparatus thereafter.
(c) the dates of same that will be relied upon by defendant to establish such earliest date?	
29. Can the aforementioned Starkey patented process produce a coating of paint on an object which is held stationary with respect to the atomizing head?	29. Yes.

5

Plaintiff's Interrogatories	Answer
33. (a) Which of the forty-five forms of license previously filed herein by the defendant, in its answers to plaintiff's interrogatories, was used in the case of each of the 732 licenses granted by the defendant as set forth in the answer to Interrogatory 3, (b) what was the name of the licensee appearing on each form, (c) what was the date of each and (d) which of said licenses, in each instance, licensed the use of airless electrostatic spray coating of articles?	33. (a) (b) (c) and (d) See Exhibit E attached.
34. With further regard to the subject of Interrogatory No. 33, what patent numbers or patent application numbers were referred to or involved in each of the licenses, if any?	34. No patent or patent application numbers were listed or referred to in any license agreements of the defendant except as shown on Exhibit F attached.
35. (a) With further regard to the foregoing Interrogatory No. 33, which of the listed licenses was restricted only to airless electrostatic spray coating of articles and	35. (a) With the exception of the license dated May 25, 1951 to Chrom-Craft Corp. (Exhibit E—Page 8), all licenses indicated in Column III of that Exhibit are restricted to airless electrostatic spray coating.
(b) which of the aforesaid licenses comprise the 463 that are alleged to be still in force and effect?	(b) The licenses referred to in Interrogatory No. 35 (a) which are still in force are indicated in Column IV on the list attached hereto as Exhibit E.
36. With further regard to the licenses referred to in Interrogatory 33, what equipment was furnished in the case of each of them by the defendant as set forth in the answer to Interrogatory 4?	36. In the cases of the various licenses referred to in plaintiff's Interrogatories Nos. 33 and 4, the equipment furnished by defendant was similar in character but varied as to quantities, attachments and fittings, dependent upon the size and character of the installations. In each case the equipment furnished was listed in a record of shipment, an example of which is attached hereto as Exhibit G.
37. In connection with the defendant's answer to Interrogatory 3, (a) what was the name of the defendant's predecessor or predecessors and, (b) what was the identity of the licenses acquired from such predecessor with respect to the (c) name of the party, (d) the licensee, (e) date and	37. (a) Harper J. Ransburg Co., a partnership. (b) (c) (d) and (e) The licenses referred to in defendant's answer to Interrogatory No. 3 as having been taken over from defendant's predecessor are identified in Exhibit H attached.

6

Plaintiff's Interrogatories	Answer
(37 cont'd)	(37 cont'd)
(f) patents or applications involved in each of such licenses?	(f) In each license listed in Exhibit H, the licensee was licensed for a particular use wherein atomization is effected by compressed air and the licensee thereby obtained a license under all patent rights then held or thereafter acquired by Harper J. Ransburg Co. to the extent that such rights applied to such use, without express identification of any specific patent or patent application in the license agreement.
40. (a) How many licenses were granted by the defendant prior to the issuance of the Starkey patent on August 3, 1954 for airless electrostatic spray coating (without the use of air), and	40. (a) 171.
(b) what was the date of the first one granted?	(b) March 21, 1949.
41. (a) When did the defendant first publicly demonstrate its electrostatic airless spray coating process,	41. (a) July 26, 1951.
(b) where and	(b) 1234 Barth Avenue, Indianapolis, Indiana.
(c) to whom was same first demonstrated?	(c) Approximately 25 representatives of trade journals. Prior to the date in (a) above, private demonstrations were given to selected individuals on various occasions.
44. With further regard to defendant's answer to Interrogatory 11, (a) do the licenses and/or leases that have been granted specifically provide for technical service fees to be paid in each instance, and not,	(a) No. The only specific provision for a technical service fee is the provision, as in Form 439 (Exhibit D-36), that if defendant's installation supervisor is delayed in licensee's plant for any reason not chargeable to defendant, the licensee pays to defendant a per diem of $75.00 during such delay.
(b) on what percentage of the licenses or leases did the defendant obtain such service fees from the licensees?	(b) Defendant has been paid such per diem in respect to approximately 1½ per cent of its licenses.
47. (a) In the light of depositions taken by defendant herein, will the defendant contend that there was any confidential or secret disclosure of the subject matter of the application from which Starkey Patent 2,685,536 issued to representatives of the plaintiff prior to the issuance of the Starkey patent and, if so,	47. (a) No.

7

Plaintiff's Interrogatories	Answer
(47 cont'd) (b) when, (c) where and (d) to whom was disclosure or disclosures made?	(47 cont'd) (b) No answer required. (c) No answer required. (d) No answer required.
51. (a) When did the defendant indicate to any of its licensees or prospective licensees as to electrostatic spray coating that it was coming onto the market with an airless type of electrostatic spray coating process, (b) to whom was such representation made, (c) in what form and (d) by whom?	51. (a) Early in 1948. (b) William Halker of Electric Auto Lite Co. (c) Orally. (d) E. M. Ransburg.
52. (a) Has the defendant ever submitted a license under its Starkey patent alone without an accompanying proposed agreement for the furnishing of equipment by the defendant and, if so, (b) to whom was such license form sent and (c) when?	52. (a) Defendant has never submitted any license limited to its Starkey, et al, patent alone. (b) No answer required. (c) No answer required.
53. (a) Has the defendant ever offered to license, under the Starkey Patent No. 2,685,536, any manufacturer of spray coating equipment capable of practicing the process of the Starkey patent with the right to make and sell electrostatic emitters and, if so, (b) to whom was such offer made and (c) when?	53. (a) No. (b) No answer required. (c) No answer required.
54. With further reference to the subject of the previous interrogatory, No. 53, (a) has the defendant ever offered to license any supplier of spray coating equipment with the right to make and sell such equipment for practicing the process of Starkey Patent No. 2,685,536 without, at the same time, requiring that such licensee sell only to users or customers licensed by defendant and, if so, (b) when and (c) to whom?	54. (a) No. (b) No answer required. (c) No answer required.

8

Plaintiff's Interrogatories	Answer
59. (a) Have any of the licenses granted by defendant been under its Ransburg Patent No. 2,658,000 and, if so, (b) what is their identity?	59. (a) Yes. (b) Without a review of all license agreements and a search of all of Defendant's files, a complete list of all persons licensed under the particular patent could not be prepared, but the following are licensed under the patent referred to: Scoville Manufacturing Co. Taylor Wharton Iron & Steel Co. Thomas Industries, Inc.
61. Has Defendant, in its licensing program directed to airless electrostatic spray coating entered into licenses such as its forms Nos. 428 and 430, requiring licensees to grant back to Defendant, a royalty-free, non-exclusive assignable license, with right to sub-license, such license to be irrevocable except upon voluntary surrender by Defendant, any inventions, improvements, or any rights from any source under letters patent, domestic or foreign, pertaining to methods and apparatus for electrostatic atomization of liquids?	61. Defendant has entered into licenses under its forms Nos. 428, 429, 430, 431, 432, 433, 434 and 434-2 (Exhibits D-23 thru D-29 and defendant has entered into certain D-31 respectively), and in addition special experimental licenses, which licenses contain a provision generally similar to that set out in Interrogatory 61.
62. If the answer to the preceding Interrogatory is in the affirmative, (a) what is the date of each such license, (b) to whom was such license granted	62. (a) and (b). Exhibit E to defendant's answer to plaintiff's Interrogatory 33 contains the dates and licensees of each license granted on the form numbers specified in answer 61 above. The dates and licensees of such special experimental licenses referred to in answer 61 are as follows:

Licensee	Date of License
All Steel Equipment, Inc.	8-31-56
Anderson-Hickey Co., Inc.	6-12-57
Hugh J. Baker & Co.	5-1-57
Baxter Steel Equipment Co.	9-11-56
Bethlehem Steel Co., Inc.	11-30-56
Baugher Mfg. Co.	6-3-57
Colson Corp.	10-4-57
Eastern Venetian Blind Co.	6-14-49
E. I. DuPont de Nemours & Co., Inc.	4-26-56
Ferro Corporation	12-18-56
General Electric Co.	8-2-55 3-12-56

9

Plaintiff's Interrogatories

(62 cont'd)

(c) which of such licenses are still in force and effect?

Answer

(62 cont'd)

Licensee	Date of License
Hardy Division, Sheller Mfg. Co.	7-29-57
Hetherington & Berner	3-22-57
Hillenbrand Associates	9-27-57
Illinois Power Co.	5-16-57
Indiana Gear Works	7-16-57
King Seeley	11-7-57
Monroe Auto Equipment Co.	1-25-51
Murphy-Miller, Inc.	7-16-57
Pacific Paint & Varnish	6-13-55
Paramount Fabricating Co.	10-11-57
Pemco Corp.	6-21-56
Pittsburgh Corning Corp.	7-19-55
Pittsburgh Plate Glass Co.	7-1-55
Plantation Patterns	6-26-57
Seymour Tool & Engineering Co.	11-17-50
Speed Queen Division, McGraw Edison	10-11-57
Stewart-Warner Corp.	10-7-57
Studebaker-Packard Corp.	4-1-57
Superior Coach Co.	3-26-57

(c) All in Exhibit E listed as active in column IV and which used the form numbers specified in answer 61 above and all those listed in answer 62(a) and (b) above, except the following which have been terminated since commencement of suit:

Licensee	Date of License
Chromcraft Corp.	5-25-51
Heintz Mfg. Co.	12-18-53
Houdaille-Hershey Corp.	11-1-54
Miller Company	10-16-53
Norris-Thermador Corp.	7-6-54
Progress Mfg. Co., Inc.	9-17-53
Whirlpool-Seeger Corp.	12-4-52

63. Has the Defendant acquired patent rights in the field of electrostatic spray coating from parties outside the Defendant's organization, including licensees?

63. Yes.

64. If the answer to the preceding interrogatory is in the affirmative, what are
(a) the names of the parties from whom such rights were obtained,
(b) the numbers of the patents involved, and
(c) the dates on which such rights were acquired?

64. (a)(b) and (c).
Other than patent rights acquired at the time of defendant's organization from its predecessor, Harper J. Ransburg Co., the defendant has acquired rights in patents in the field of electrostatic spray coating from parties other than defendant's officers, employees and consultants in the following instances:
Research Corp. 2,097,233 and 2,221,338 acquired 10-7-48
Charles Kahan 2,548,477, acquired 3-12-51.

10

Plaintiff's Interrogatories	Answer
67. Has Defendant ever granted licenses to paint or other coating material manufacturers in which (a) the initial fee payable by such manufacturers was less than the initial fee charged to the other users for the same type of equipment, or (b) the minimum monthly fee payable by such manufacturers was less than the minimum monthly fee charged to other users for the same type of equipment?	67. (a) Yes. (b) Yes.
68. If the answer to either or both portions of the preceding interrogatory is in the affirmative, what are (a) the names of such paint or coating manufacturers (b) the dates on which such licenses were issued:	68. (a) and (b). Ditzler Color Division, Pittsburgh Plate Glass Co. 10-4-50 Pittsburgh Plate Glass Co. 7-1-55 Pacific Paint & Varnish Co. 6-13-55 E. I. DuPont deNemours & Co. 4-7-49 and 4-26-56 Pemco Corp. 8-21-56 Ferro Corp. 12-18-56
69. Has any paint or other coating material manufacturer ever advertised its paint or coating material for use with a coating process or apparatus of Defendant?	69. Yes.
71. (a) Does the Defendant own in excess of substantially two and one quarter million dollars' worth of leased electrostatic spray coating equipment plus replacement parts, and (b) if so, is at least 75% of such equipment designed for the airless type of electrostatic spray coating?	71. (a) and (b). (a) No. The aggregate approximate cost of equipment and replacement parts when shipped was in excess of $2,250,000. (b) On the basis of cost, at least 75% of such equipment was designed for the airless type of electrostatic spray coating.
73. Did the Ford Motor Company ever negotiate with Defendant for a paid-up license under any of Defendant's?	73. No, but a quotation was requested by Ford Motor Company on July 6, 1956 for a paid-up license with equipment.

11

Plaintiff's Interrogatories	Answer
74. If the answer to the preceding interrogatory is in the affirmative, what are (a) the dates of such negotiations, (b) the amount which Defendant proposed to charge Ford for such a license?	74. (a) The quotation was submitted on August 14, 1956. (b) The quotation submitted was as follows, as set forth in the "Proposal to Ford Motor Company for Equipment to Paint Hoods," a copy of which has heretofore been furnished to Plaintiff: "Ransburg will supply: "(a) one unit to apply finish enamel on the outside only to hoods for $32,500.00 to product (*sic.*) a maximum of 50,000 hoods per year, or "(b) one unit to apply finish enamel on the outside only to hoods for $267,000.00 without annual maximum limits. It is estimated that this unit is capable of applying 2.0 to 2.5 mills film thickness at approximately three hoods per minute, or, on a three-shift basis, approximately 720,000 hoods per year, or "(c) sufficient units to apply finish enamel on the outside only to all hoods produced by Ford in the U.S.A. for $700,000.00 plus $15,000.00 for each unit required. "A single unit consists of two reciprocating 25" disks, one voltage pack and controls, two insulated paint pumps, electrical cables and polyethylene tubing to supply current and paint to the disks, as shown on drawings No. 231823, and engineering drawings. Ford will supply conveyors, hangers, the metal enclosures, ventilation, and the reciprocating mechanisms to meet Ransburg's requirements. "Ransburg will also run the customary test demonstrations and installation supervision and instruction. "This proposal is subject to the protective clauses in Ransburg's regular agreement. "Terms of payment and shipment dates subject to agreement." Subsequently, at Ford's request, on September 11, 1956, defendant mailed to Ford its standard printed forms for licenses both with and without equipment. 75. No, other than the licensees.

Plaintiff's Interrogatories	Answer
75. Does the Defendant know of any concern or party other than Defendant which renders any servicing for Defendant's electrostatic spray coating equipment in the hands of Defendant's licensees?	
12	
78. Beginning in about May, 1953 did Defendant send out a form letter to its licensees identical or substantially identical in content to the letter to Altex Corporation dated July 15, 1953, a copy of which is attached hereto as "Exhibit A"?	78. Yes.
79. Did Defendant, in letters transmitting license and lease agreements after May, 1953 include in such letters a statement reading substantially as follows: "We understand that you wish this type of agreement rather than one under which we do not furnish these additional items."	79. Yes, but said letters transmitted proposed contracts for execution rather than consummated agreements.
80. (a) Does Defendant know of any prior writings from recipients of the letters referred to in the preceding interrogatory requesting Defendant to supply equipment as part of the agreement referred to in the quoted statement, and if so (b) what are the dates of such writings, and (c) from whom were they received?	80. (a) No, although there may be some such writings which might be found upon a search of the files. (b) and (c). No answer required.
81. (a) Has Defendant issued any licenses relating to electrostatic spray coating in which the duration of payments to be made by licensees was confined expressly by the terms of such license to the life of any patent or patents under which such license was granted, and if so, (b) who were the licensees involved in each such transaction, and (c) what were the dates thereof?	81. (a). No. (b) and (c) No answer required.
82. (a) Has Defendant issued any license in the fields of manufacturing abrasive articles, flock coated articles, and/or articles coated with fiber-shaped particles, and if so, (b) what is the identity of each such licensee, and (c) what is the date of each such license?	81. (a) No. (b) and (c) No answer required.

13

Plaintiff's Interrogatories

83. (a) Has Defendant received any inquiries for licenses in the fields of manufacturing abrasive articles, flock coated articles, and/or articles coated with fiber-shaped particles, and if so,
(b) what disposition was made of such inquiries?

Answer

83. (a) No, but on occasion defendant has received inquiries as to whether its processes and equipment are suitable for one or more of these purposes.

(b) Defendant has replied in substance that its process and equipment are primarily for electrostatic painting, and has informed the inquirer that Behr-Manning Company might be able to furnish the desired information.

84. In the list of equipment supplied by Defendant appearing as Exhibit "G" in Defendant's Answer to Plaintiff's Interrogatory No. 36,
(a) what is the identity of the claim or claims of each patent under which Defendant has acquired rights from outside parties as mentioned in Interrogatories 63 and 64 which apply to such equipment or the use thereof in the electrostatic spray coating of liquids?

84. None.

85. What is the amount of royalties and fees received year by year by the Defendant to the present date on the licenses which it has granted in the electrostatic spray coating field?

86. What is the amount of royalties and fees received year by year to the present date by the Defendant on its licenses for airless electrostatic spray coating?

85. and 86.
Total fees received year by year by defendant (and by defendant's predecessor) for its compressed air spray process (No. 1 Process) and for its airless process (No. 2 Process) since the commencement of the marketing of its electrostatic spray coating processes in 1944 are approximately as follows:

Year	No. 1 Process Fees	No. 2 Process Fees
1943	$ —	$ —
1944	47,000	—
1945	165,000	—
1946	270,000	—
1947	380,000	—
1948	555,000	—
1949	665,000	—
1950	810,000	6,000
1951	880,000	210,000
1952	820,000	535,000
1953	890,000	700,000
1954	820,000	1,075,000
1955	830,000	1,485,000
1956	720,000	2,220,000
1957	630,000	2,640,000

14

Plaintiff's Interrogatories	Answer
89. (a) Has Defendant or anyone else ever sold or offered for sale any second-hand or used equipment of Defendant for airless electrostatic spray coating, and, if so,	89. (a) No.
(b) to whom was such sale or offer to sell made?	(b) No answer required.
90. (a) Does Defendant license its electro-static spray coating process in foreign countries, and, if so,	90. (a) Yes.
(b) in each instance what is,	(b)
(1) the date of each such license	(1) and (2) See Exhibit K
(2) the identity of the licensee in each such license and	
(3) the terms under which such license was granted.	(3) Either a copy of the license agreement identified in Exhibit K is attached or its terms in substance are identified in Exhibit K by reference to forms comprising Exhibit D, previously given to plaintiff in answer to plaintiff's interrogatories.
92. Does Defendant own any foreign patents corresponding to Starkey et al., U. S. Patent No. 2,685,536, and if so,	92. Yes.
(a) in what foreign countries have such patents issued, and	(a) Canada
(b) what is the filing date issue date number of each such patent.	(b) September 29, 1945 September 21, 1948 No. 451,277
93. As to its charge of infringement of its apparatus patent 2,794,417, does defendant	93.
(a) rely upon any structure used by plaintiff not already embraced in the charge of infringement under defendant's method patent No. 2,685,536, and	(a) No.
(b) if the answer is in the affirmative, what is the additional structure which is relied upon by defendant?	(b) No answer required.

15

Plaintiff's Interrogatories	Answer
95. Did the defendant in connection with the prosecution of its alleged earlier application Serial Number 556,390, from which its process patent No. 2,685,536 issued, (a) ever file an appeal or a Bill of Complaint to any of the courts based on the Board of Appeal's decision dated December 18, 1953 affirming the Examiner's final rejection of apparatus claims 63, 65, 87 and 95, and (b) if so, what was the identity and date of such proceedings, and (c) what disposition was made of same, and (d) when?	95. (a), (b), (c), and (d). On February 15, 1954, defendant filed in the District Court for the District of Columbia, a complaint in an action entitled "William A. Starkey, Edwin M. Ransburg, and Ransburg Electro-Coating Corp. *vs.* Sinclair Weeks Secretary of Commerce, and Robert C. Watson, Commissioner of Patents," C. A. No. 625-54, seeking, in effect, reversal of the decision of the Board of Appeals of December 18, 1953, affirming the final rejection of apparatus claims 63, 65, 87, and 95 and certain method claims in said application Serial No. 556,390. On March 8, 1954, following allowance by the Patent Office on February 18, 1954, of said application as amended, such action was dismissed by stipulation.
96. In any of the proceedings involving the earlier application Serial No. 556,390, from which process patent 2,685,536 issued, (a) did the Patent Office ever make a requirement for division as between process and apparatus claims and (b) if so, when?	96. (a) No. (b) No answer required.
97. Who in the defendant organization made or approved of the decision to cancel all the apparatus claims No. 40, 44, 63, 65, 87, 94 and 95 from the earlier application Serial No. 556,390, from which the process patent 2,685,536, issued?	97. E. M. Ransburg, Vice President.
98. (a) When did the defendant first claim in a patent application of an airless electrostatic spraying apparatus the specific feature of having spaced atomizing points "sufficiently close together to permit the coating material to bridge the spaces therebetween" and (b) what was the identity of such application wherein such feature was claimed and (c) what was the identity by number of the first claim or claims claiming such feature?	98. (a) August 21, 1956 was the earliest date on which defendant presented in a patent application any claim to an airless electrostatic spray coating apparatus using the expression "sufficiently close together to permit the coating material to bridge the spaces therebetween", to describe the arrangement of points at which atomization occurs. (b) Serial No. 434,366, on which patent No. 2,794,417 in suit issued. (c) Claim 18 of the application which became claim 4 of said patent.

16

Plaintiff's Interrogatories	Answer
102. As far as the defendant knows, has any of its airless No. 1 electrostatic systems been used for (a) coating with abrasives, (b) coating with flocking, and (c) if the answer to a or b is in the affirmative, when and (d) by whom and (e) where?	102. (a) and (b). No. (c), (d), and (e). No answer required.
104. As far as the defendant knows, (a) has its licensee, Behr-Manning Corporation ever made, sold or leased airless type electrostatic spraying equipment for applying solid particle coating materials and if so	104. (a) No.
(b) when and (c) to whom was such equipment furnished?	(b) and (c). No answer required
105. Under the cross license agreement (Ex. VV) with Behr-Manning Corporation, dated September 26, 1944, how does the defendant determine when a coating is considered to be of the (a) "liquid particle type" as to which it is licensed and	105. (a) Under the terms of its agreement with Behr-Manning Corp. dated September 26, 1944, the defendant considers that a coating is of the "liquid particle type" as to which it is licensed under the Behr-Manning patents if such coating is a liquid at the time of atomization and is not used in the manufacture of abrasive articles or of flock-coated article or articles coated with fiber-shaped particles.
(b) when it is considered to be of the "solid particle type", as to which Behr-Manning is licensed?	(b) Defendant has had no occasion in connection with said agreement to consider whether any given coating is of a "solid particle type" inasmuch as Behr-Manning Corp.'s license under defendant's listed patents is not determined by the type of coating used, but is determined by the nature of the article manufactured.
106. Under the cross license agreement with Behr-Manning dated September 26, 1944, which party has the right to operate in the field of coating materials such as (a) wax (b) tars (c) plastic resins and (d) rosins?	106. Under the terms of defendant's agreement with Behr-Manning Corp. dated September 26, 1944, defendant has the right to use the patents and applications covered by the agreement with respect to coating materials such as (a) wax (b) tars (c) plastic resins, and (d) rosins to the extent that such materials are liquids when atom-

17

Plaintiff's Interrogatories	Answer
(108. cont'd)	(108. cont'd) ized and are not used for the manufacture of abrasive articles or flock-coated articles or articles coated with fiber-shaped particles, and Behr-Manning Corp. has the right to use such patents with respect to such materials when used for the purpose of manufacturing such articles.
111. As far as the defendant knows, have the parties to the cross license agreement dated September 26, 1944, between Ransburg and Behr-Manning Corp. whereby the electrostatic deposition field was divided into one of liquid particle coating and another of solid particle coating	111. Without adopting plaintiff's characterization of said contract, defendant answer Interrogatory 111 as follows:
(a) lived up to the provisions of such agreement, and	(a) Yes.
(b) is such an agreement still of force and effect, and	(b) Yes.
(c) if not, when was it terminated?	(c) No answer required.
115. Referring to the answer to Interrogatory 83a, b,	115. The identity of all inquiries and responses referred to in defendant's answer to plaintiff's Interrogatory 83 of which defendant knows, are as follows:
(a) what is the identity of all inquiries referred to therein and	(a) *Inquiries* Letter dated December 17, 1952 from American Wringer Co., Inc. Woonsocket, R. I. to defendant. Letter dated February 10, 1955 from Dewey and Almy Chemical Co. Division of W. R. Grace & Co., Cambridge, Mass., to defendant.
(b) the identity of all responses thereto?	(b) *Responses* Letter dated December 29, 1952 from defendant to American Wringer Co., Inc. Letter dated February 15, 1955 from defendant to Dewey and Almy Chemical Co.
117. (a) Was the defendant ever advised by Dr. Emery P. Miller or anyone else that prior to October 1943, it was old in the scientific arts to use an electrostatic field for effecting atomization and spraying of liquid particles and if so	117. (a), (b), (c), and (d). Since coming into existence, defendant has known that it was old, prior to October 1943, to use an electrostatic field for effecting atomization and spraying of liquids. At least one of the officers of defendant possessed such knowledge at the time of defendant's incorporation on January 1, 1948.
(b) what was the name of such person,	
(c) the identity of such prior use, and	
(d) the date when such advice or knowledge was received?	

18

Plaintiff's Interrogatories	Answer
122. (a) Who in the defendant company authorized or approved of its counsel adding to its patent application, from which the apparatus patent 2,794,417, issued Claim 18 of Amendment C (which now corresponds to Claim 4, charged to be infringed by plaintiff herein) and	122. (a) E. M. Ransburg.
(b) what was the identity of such authorization?	(b) Oral, at some time between August 8 and August 21, 1956.
123. (a) Who in the defendant's company or employ, divulged around July or August, 1956, to its counsel (prosecuting the application from which its patent 2,794,417 issued) the subject of plaintiff's electrostatic sprayer apparatus which had been disclosed in plaintiff's letter of July 5, 1956, to defendant referred to in the complaint herein	123. Defendant received no letter from plaintiff dated July 5, 1956 disclosing the nature of plaintiff's sprayer, but did receive the letter dated July 25, 1956 referred to in the complaint herein, enclosing a drawing of the sprayer designated SK-861, and answers as follows with respect to said letter and sprayer: (a) Defendant does not now know who communicated to its counsel the subject matter of said sprayer.
(b) on what date,	(b) Shortly after the receipt of said letter, on or about July 26, 1956.
(c) who was present at the time of disclosure, and	(c) Not now known.
(d) what was the identity of any letters or record made bearing in any way on such disclosure?	(d) Defendant knows of no letters or records bearing on said disclosure.
124. (a) Did defendant at any time during the more than twelve years, pendency of its applications from which its two patents 2,658,536 and 2,794,417 issued, ever assert prior to August 1956 any claim on airless electrostatic spraying in any pending application in the Patent Office wherein it was specified that the atomizing space points were "sufficiently close together to permit the coating material to bridge the spaces therebetween"	124. (a) No.
(b) if the answer is in the affirmative, what is the identity of each and every said claim?	(b) No answer required.
125. (a) Who in the defendant company authorized the filing in the United States District Court for the District of Columbia the Complaint in the case of Wm. A. Starkey, Edwin M. Ransburg and Ransburg Electro-Coating Corp. *vs.* Sinclair Weeks, Secretary of Commerce and Robert C. Watson, Commissioner of	(a) E. M. Ransburg.

19

Plaintiff's Interrogatories	Answer
(125. cont'd) Patents, C. A. 625-54 involving a suit under Section 4915, (b) to whom was such authority given, (c) when,	(125. cont'd) (b) The law firm of Schroeder, Hofgren, Brady and Wefner. (c) Shortly prior to the filing of said complaint.
(d) was the authority referred to in any way on a written paper, and (e) if so, what was the date and identity of such paper or papers?	(d) No. (e) No answer required.
126. Referring to Starkey et al *vs.* Weeks et al, C. A. 625-54, (a) who in the defendant company authorized dismissal of such suit on or about March 1954 (b) when,	126. (a) E. M. Hansburg. (b) At some time between February 18 and March 8, 1954.
(c) to whom was the authority given and (d) if in writing, what was the date of any and all paper writings or correspondence on such subject?	(c) The law firm of Schroeder, Hofgren, Brady and Wegner. (d) Not in writing.
127. (a) Did the defendant on or about March, 1954, enter into and file a stipulation of dismissal in Starvey *vs.* Weeks, C. A. 625-54 wherein it was recited: "the Examiner having found allowable the claims now presented in plaintiffs' application here in suit, and the Notice of Allowance thereof having issued, 'It is hereby stipulated that the present action be dismissed'." and	127. (a) Yes.
(b) was the application Serial Number 556,390 field Sept. 29, 1944, from which the Starkey et al process patent No. 2,685,536 was later issued on Aug. 3, 1954, the application that was in suit referred in the stipulation and	(b) Yes.
(c) at the time of the signing and filing of such stipulation were any of the apparatus claims 63, 65, 87 and 95 of said application Serial Number 556,390 on which a patent was prayed under section 4915 in said suit allowed in such application?	(c) No.
128. Is it not a fact that at the time of the filing of the stipulation of dismissal in the month of March 1954 (a) all of the apparatus claims including claims 40, 55, 63, 65, 87, 94 and 95 had been cancelled by an amendment dated Jan. 27, 1954, to application Serial Number 556,390 and	128. (a) At the time of the filing of said stipulation of dismissal in Mar. 1954, all of the apparatus claims, including claims 40, 55, 63, 65, 87, 94 and 95, of said application Serial No. 556,390 had been cancelled by an amendment dated Jan. 27, 1954, expressly without prejudice to applicant's right to file a divisional or continuation application directed to the apparatus features of their invention.

Plaintiff's Interrogatories	Answer
(128. cont'd)	(128. cont'd)
(b) no application of defendant was then pending in the Patent Office at the time of the dismissal embodying any such apparatus claims?	(b) Yes.
129. Is it not a fact that following the Court's dismissal of Starkey vs. Weeks, C. A. 265-54, brought under Section 4915 R. S. for the grant of a patent, the defendant requested on or about Feb. 15, 1954 the impounding of the records of such suit and	(a) Yes.
(b) if the answer is in the affirmative, what was the date of such request for impounding and	(b) On or about Mar. 15, 1954.
(c) what was the date of the order entered ordering the record of the suit to be impounded against access to the public, and	(c) Mar. 15, 1954.
(e) who in the defendant company authorized such impounding, and	(e) E. M. Ransburg authorized the request.
(f) to whom was such authorization addressed and	(f) Schroeder, Hofgren, Brady and Wegner.
(g) in what form, and	(g) Oral.
(h) when?	(h) At some time between Feb. 15 and Mar. 15, 1954.
133. (a) Has the defendant conducted any experimentation with regard to airless electrostatic coating to determine how large or how low the number of liquid particles should be to effect a satisfactory coating and	(a) No.
(b) if so, when were such tests made,	(b), (c), (d) and (e) No answer required.
(c) by whom,	
(d) with what liquids, and	
(e) what if any was the range of size of particles developed by such tests?	
134. Does the defendant in its No. 2 airless electrostatic system (which it relies upon for commercial success as to its Starkey et al patents in suit),	134.
(a) employ an electrostatic atomizing head from which liquid particles are emitted in an electrostatic field of sufficient strength to charge the particles for deposition on an article, and	(a) Yes in the sense that the atomizing head supports the liquid from which the particles are atomized.
(b) if the answer is in the affirmative, what "strength" in terms of units of electrical measurement is considered "sufficient" in such	(b) An average potential gradient on the order of 8,000 volts per inch between the atomizer and the work.
(c) if there is a range of "strength," what is that range?	(c) from about 5,000 volts to about 10,000 volts per inch average potential gradient.

21

Plaintiff's Interrogatories	Answer
135. Does the defendant in its No. 2 airless electrostatic system (which it relies upon for commercial success as to its Starkey et al patents in suit),	135.
(a) create an electrostatic charge differential between the particles and the article of a strength to move the particles toward the article sufficiently rapidly to deposit them thereon while still in a liquid state, and	(a) Yes.
(b) if the answer is in the affirmative, what is that "strength" in units of electrical measurement, and	(b) That resulting from the maintenance of an average potential gradient on the order of 8,000 volts per inch between the atomizer and the work.
(c) if there is an allowable range of "strength," what is it, and	(c) An allowable range of strength is such as results from maintenance of an average potential gradient of from about 5,000 volts to about 10,000 volts per inch between the atomizer and the work.
(d) what is considered in units of measurement to be satisfactory for a sufficiently rapid movement of the particles toward the article?	(d) That resulting from the maintenance of an average potential gradient on the order of 8,000 volts per inch between the atomizer and the work.
136. Does the defendant in its No. 2 airless electrostatic system (which it relies upon for commercial success as to its Starkey et al patents in suit),	136.
(a) use an atomizing applicator head to form liquid into a body having a plurality of closely spaced aligned exposed termini of relatively small area, and	(a) Yes.
(b) if the answer is in the affirmative, how close in terms of measurement do the termini have to be spaced for satisfactory coating, and	(b) In most cases, less than one-tenth inch apart.
(c) if there is an allowable range of closeness, what is the same, and	(c) An allowable range is from one-tenth to one-hundredth of an inch.
(d) what is considered, in such system in terms of units of measurement, to be a "relatively small area"?	(d) The area of a terminus having a diameter of a few thousandths of an inch.
137. Does the defendant in its No. 2 airless electrostatic system (which it relies upon for commercial success as to its Starkey et al patents in suit),	137.

22

Plaintiff's Interrogatories	Answer
(137. cont'd) (a) have means for feeding liquid in a relatively narrow stream to an applicator head and means at the head for spreading the stream to form it into a body of liquid coating material having an extent many times the maximum cross-sectional dimension of the stream, and	(137. cont'd) (a) Yes.
(b) if so, in terms of measurement, what does "many times" comprise, and	(b) About 25 or more.
(c) if there is a range, for said "many times," what is that range?	(c) From about 25 to 30.
138. Does the defendant in its No. 2 airless electrostatic system (which it relies upon for commercial success to its Starkey et al patents in suit), (a) provide for the moving of an article past and in spaced relation to a zone of atomization, and	138. (a) No, but Defendant's customers do.
(b) if the answer is in the affirmative, at what rate in terms of units of measurement must the article be moved to effect satisfactory coating, and	(b) At a rate which will result in the desired coating and which depends on the rate of coating-material atomization.
(c) what spacemust there be present between the article being moved and the zone of atomization, and	(c) Enough space to prevent sparking between the atomizer and the work at the voltage maintained.
(d) if there is a range of dimension as to either of the foregoing (b) and (c), what is that range?	(d) Since the rate of article movement depends upon the rate of coating-material atomization and since the latter rate is controlled by the customer, Defendant does not know the extremes of article speed employed by its customers. Defendant knows of one speed as low as about two and one-half feet per minute and another of over 80 feet per minute. So far as Defendant knows, the space maintained by its customers between atomizer and work varies between about 4½ inches and about 24 inches.
140. Does the defendant in its No. 2 airless electrostatic system (which it relies upon for commercial success as to its Starkey et al patents in suit), (a) distribute dispersed particles of liquid over an area having each of its dimensions many times greater than the minimum cross-sectional dimension of the stream at the points or termini of atomization, and	140. (a) Yes.

23

Plaintiff's Interrogatories	Answer
(140. cont'd)	(140. cont'd)
(b) if the answer is in the affirmative, what is the minimum cross-sectional dimension of the stream, and	(b) Usually about two to four thousandths of an inch.
(c) how many times greater than said minimum dimension is the area over which it is distributed, and	(c) Each dimension of the area over which the dispersed particles of liquid are distributed is usually several hundred times the minimum cross-sectional dimension of the stream.
(d) if there is a range of either of the foregoing dimensions of (b) and (c), what is such range?	(d) The range has never been determined by Defendant.
142. Does the defendant in its No. 2 airless electrostatic system (which it relies upon for commercial success as to its Starkey et al patents in suit),	142.
(a) have a high enough voltage gradient to establish a corona discharge when liquid is not being fed to the atomizing field, and	(a) Yes.
(b) when liquid is being fed to the field, does the atomizing of the liquid occur generally in the area where the corona discharge would normally occur, and	(b) Yes.
(c) is that area generally at or in close proximity to a sharp edge on an applicator head?	(c) Yes.
144. In defendant's No. 2 airless electrostatic system (which it relies upon for commercial success as to its Starkey et al patents in suit),	144.
(a) is there in every instance completely quiescent air between the points of termini of atomization and the article being coated, and	(a) Yes, as "quiescent" is defined in the file wrapper of Patent No. 2,685,536 in suit.
(b) if the answer is in the affirmative, is the air quiescent throughout the entire space separating the atomization point and the article, and	(b) Yes.
(c) does the centrifugal action of the atomizing head in the No. 2 system cause any turbulence whatsoever of air between the head and the article?	(c) The rotation of the atomizing heads in commercial No. 2 systems creates some movement or flow of air in the region between the head and the article; but Defendant does not know whether that flow is turbulent or whether it is smooth.

24

Plaintiff's Interrogatories	Answer
145. Does the defendant in its No. 2 airless electrostatic system (which it relies upon for commercial success as to its Starkey et al patents in suit),	145.
(a) atomize and disperse particles toward a surface to be coated spaced a substantial distance from the atomizing head, and	(a) Yes.
(b) if so, what is considered to be a substantial distance in terms of units of distance, and	(b) In systems currently in use, the minimum distance between the atomizing head and the surface to be coated is about five inches, which distance is regarded as substantial.
(c) if there is a range for such distance, what is that range?	(c) In systems currently in use, the distance ranges from about five inches to about two feet.
146. Does the defendant in its No. 2 airless electrostatic system (which it relies upon for commercial success as to its Starkey et al patents in suit),	146.
(a) employ a plurality of aligned mechanical closely spaced points in an atomizing head for atomizing and dispersing liquid material, and	(a) No.
(b) if so, how close must the points be spaced in terms of units or distance to be sufficiently closely spaced for effecting coating of the article?	(b) No answer required.
147. Does the defendant in its No. 2 airless electrostatic system (which it relies upon for commercial success as to its Starkey et al patents in suit),	147.
(a) employ more than one step or operation, for effecting atomization, dispersion and deposition of the coating liquid, and	(a) Yes.
(b) if so, what are the steps or operations that are employed?	(b) The steps include feeding the coating material at a controlled rate to the atomizing zone, maintaining a spacing of at least several inches between the head and the article to be coated, and maintaining between head and surface a potential difference sufficient to effect the atomization, dispersion and deposition.

25

Plaintiff's Interrogatories	Answer
149. Does the defendant in its No. 2 airless electrostatic system (which it relies upon for commercial success as to its Starkey et al patents in suit),	149.
(a) provide any separate mechanical means, such as tangible or physical points, for dividing the spray particles into finely divided, discrete spray particles, and	(a) No.
(b) if not, is there any physical means in the atomizing head itself to divide or preset the spray particles into finely divided discrete particles, and	(b) No.
(c) if so, how is that done?	(c) No answer required.
152. In connection with defendant's answer to Interrogatory 117, wherein it is said "defendant has known that it was old, prior to October 1943, to use an electrostatic field for effecting athomization and spraying of liquids.",	152.
(a) what is the name of the officer or officers who had such knowledge.	(a) E. M. Ransburg.
(b) what is the identity of the source or party or persons from which such knowledge was derived, and	(b), (c) and (d) Such knowledge was acquired from the United States Patent to Darrah, No. 1,958,406, cited by the Patent Office Examiner in the file wrapper of Starkey Patent No. 2,685,536 in suit.
(c) was any of such knowledge acquired in written form or reduced to writing, and	
(d) if so, what is the identity of each and all such papers in writing bearing in any way on such knowledge?	
154. In defendant's Admission No. 65, it is admitted: "Dr. Emery P. Miller observed that, upon shutting off the operation of the air type No. 1 electrostatic coating system, when the flow of compressed air from the air spray gun ceased before the flow of paint ceased, a jet of liquid paint was momentarily discharged adjacent the high potential electrodes in the area of the corona discharge, with the result that some atomization occurred." and defendant is now asked,	154.
(a) whether any means is provided in the air type No. 1 electrostatic coating system to prevent atomization by the electrostatic high potential electrode of the liquid during the use of the system, and	(a) No.

26

Plaintiff's Interrogatories	Answer
154. (cont'd)	154. (cont'd)
(b) if no such means is provided, is it a fact that at least some part of the liquid that is dispersed and deposited on an article is atomized by the high potential electrode, and	(b) Not to Defendant's knowledge.
(c) has defendant made any effort to determine what part of such liquid sprayed by the No. 1 system, if any, is atomized, dispersed and deposited by the high potential electrode, and	(c) No.
(d) when, and	(d) No answer required.
(e) with what results?	(e) No answer required.
156.	156.
(a) Was the initial contact with and leading up to the cross-license with Behr-Manning initiated by the letter from Behr-Manning, to defendant's predecessor company, dated November 22, 1940, and	(a), (b) and (c) Defendant's predecessor had no contact with Behr Manning prior to the letter dated November 22, 1940, from that company.
(b) if the answer is in the negative, was there any written correspondence or written memorandums pertaining thereto dated prior to November 22, 1940, and	
(c) if so, what are their identities?	
160.	160.
(a) Did the defendant or its predecessor ever receive in writing any notice of patent infringement from Behr-Manning, and	(a) No.
(b) if so, what is the date and identity of all such written notices of patent infringement?	(b) No answer required.
161.	161.
(a) Did the defendant or its predecessor ever notify in writing Behr-Manning of infringement of any of the defendant's patents, and	(a) No.
(b) if so, what is the date and identity of all such writing?	(b) No answer required.
164. In connection with defendant's answer to Request for Admission No. 14, wherein it admitted: "That an initial act of conception in connection with the subject matter of the Starkey and Ransburg patent in suit was the observation by Starkey of the behavior of a wet paint brush in an electrostatic field."	164.

27

Plaintiff's Interrogatories	Answer
164. (cont'd)	164. (cont'd)
(a) did defendant ever endeavor to commercialize the use of a paint brush for electrostatic atomizing and spraying paint or other liquid coating material, and	(a) No.
(b) if so, when and	(b) No answer required.
(c) what was the identity of such commercialization, and	(c) No answer required.
(d) is the Starkey et al process patent No. 2,685,536 in suit based upon the principle observed in the behavior of a wet paint brush in an electrostatic field observed by Starkey?	(d) In part.
165.	165.
(a) Did the operation of the behavior of the wet paint brush in an electrpstatic field observed by Starkey, as referred to in Request for Admission No. 14 include the step of maintaining, between the brush and the piece of paper (Exhibit No. B) which was coated, an electrostatic field which electrostatically effected atomization, dispersion and deposition of paint?	(a) The initial act of conception referred to in Defendant's reply to Request for Admission No. 14 did not involve any paper, but did involve existence between the brush and an opposed surface of an electrostatic field which electrostatically effected atomization, dispersion and deposition of pain on such surface.
166. Which of the issued patents listed in Exhibits A and B comprising part of defendant's agreement letter of January 18, 1954 with Avco Manufacturing Corp.,	166.
(a) disclose or cover electrostatic atomization of liquid particles *without the use of air* and	(a) Nos. 2,651,287; 2,568,611; 2,658,009; and 2,658,472.
(b) which cover the electrostatic atomization of liquid particles with the use of air?	(b) None.
167.	167.
(a) Have any of the patent applications identified or referred to in Exhibits A and B comprising part of defendant's agreement letter of January 18, 1954 with Avco Manufacturing Corp. as to the airless system issued into letters patent, and	(a) Yes.
(b) if so, what is the patent number and issue date of each such patent that has issued, and	(b) So far as Defendant knows, Patents Nos. 2,370,636; 2,376,343; and 2,770,219.
(c) which of such issued patents cover airless electrostatic atomization of liquid particles?	(c) None.

28

Plaintiff's Interrogatories	Answer
168.	168.
(a) Did the defendant purposely adopt the following language in its several printed forms of leasing and licensing, and with particular regard to the underscored conjunctions, as follows: Exhibit D-1, adopted January 4, 1948 "Whereas Ransburg owns certain United States letters patent *and* inventions and is licensed under others * * *" Exhibit D-23, adopted April 15, 1951 "Whereas Ransburg is the owner of or otherwise has the right to grant licenses under certain inventions, letters patent of the United States *or* patent applications * * *" Exhibit D-32, adopted January, 1955 "Whereas Ransburg is the owner of or otherwise has the right to grant licenses under certain United States letters patent *and* inventions * * *"	(a) Yes.
and	
(b) why did the defendant use the conjunction "and" to begin with in its first printed form of agreement on the No. 1 air type system, and then in its first printed agreement pertaining to the No. 2, or airless system (for D-23) use the conjunction "or," and later, in its printed form D-32, on the No. 2 system, use the conjunction "and"?	(b) So that the recital would correspond to the status of Defendant's patent rights at the time each form was prepared.
169. With regard to defendant's indication or notice beginning around 1948 to its licensees that it was coming on to the market with an airless electrostatic spray coating system,	169.
(a) approximately what percentage of its licensees thereafter leased the No. 2 system, and	(a) Of the licenses granted subsequent to the year 1950, when Defendant first indicated to its No. 1 system licensees that it was coming on the market with a new system, approximately 66 per cent were for the No. 2 system.
(b) approximately to what extent percentagewise has the No. 2 airless system supplanted the air type No. 1 system?	(b) Not known to Defendant.

29

Plaintiff's Interrogatories	Answer
170. (a) Was substantially the same pattern of selling its licensees initially on the No. 2 airless system used as was employed in selling its air type No. 1 system,	170. (a) Yes, in many respects.
(b) was the experience gained in leasing the No. 1 system of assistance in getting customers to lease the No. 2 system, and	(b) Defendant's experience in marketing its No. 1 system was of assistance in marketing its No. 2 system.
(c) when customers leased the No. 2 system in place of the No. 1, was there in any proportion of such leases no substantial interruption in the payment of fees to defendant by its customers, and	(c) Yes.
(d) did some customers contemporaneously lease both the No. 1 and No. 2 systems, and	(d) Yes; some customers have simultaneously been licensees of the No. 1 and No. 2 systems, as shown in Exhibit A to the answer to Plaintiff's Interrogatory No. 2 (b).
(e) if the answer to (d) is in the affirmative, what percentage of defendant's customers have leased both systems?	(e) Approximately 10 per cent, to the date of this suit, as shown by said Exhibits A and E.
171. (a) With regard to defendant's airless electrostatic spray coating leases granted prior to the issuance of its process patent No. 2,685,536, in suit, what issued patents, if any of the defendant, *disclosing* or *claiming* airless electrostatic spray coating process or equipment, covered the leased system, and	171. (a) Most systems licensed under airless electrostatic spray coating agreements entered into between Defendant and its customers prior to issuance of Patent No. 2,685,536, are regarded by Defendant as not covered by any patent of Defendant which was issued at the date of the agreement and which disclosed or claimed any airless electrostatic spray coating process or equipment. In some instances, however, there were among Defendant's Patents Nos. 2,568,611; 2,651,287; 2,658,009; and 2,658,472 (all of which disclose airless electrostatic spray coating) one or more which was issued at the time of the agreement and which is regarded by Defendant as covering the use licensed by the agreement.
(b) if defendant, at the time of the issuance of any of said leases did not have any patents that were applicable to the leased system, did the defendant in any instance advise the customer that it had no applicable issued letters patent, and	(b) Yes.
(c) that it only had pending patent applications which it considered applicable?	(c) Yes.

30

Plaintiff's Interrogatories	Answer
172.	172.
(a) What is the identity with regard to name and address of all persons or parties including attorneys and agents who participated in any way in the drafting of or vising of each of the license forms D-1 to D-38 and	(a) Edwin M. Ransburg, Indianapolis, Indiana, as a representative of Defendant's management, participated in most of the revisions of the Defendant's license forms and was assisted from time to time on various forms by some, but not all on each revision, of the following attorneys at law from and after the dates indicated: Harry E. Downer, 630 West New York Street, Indianapolis, Indiana, since the Defendant's incorporation Harry T. Lee, 951 Consolidated Building, Indianapolis, Indiana, since the Defendant's incorporation. Verne A. Trask, 801 Hume Mansur Building, Indianapolis, Indiana, since the Defendant's incorporation. Elbert R. Gilliom, 1344 Consolidated Building, Indianapolis, Indiana, since September, 1951. Jules L. Brady, 20 North Wacker Drive, Chicago, Illinois, since 1952. Merrill N. Johnson, 630 West New York Street, Indianapolis, Indiana, since 1952.
(b) what suggested change or revision, if any, was made by each of such persons?	(b) Who suggested what changes or revisions is not known to Defendant except that it is recalled that forms Nos. D-21 and D-36 were substantially contributed to by Elbert R. Gilliom and Jules L. Brady.
181.	181.
(a) In connection with the testimony of Donald C. Howarth (deposition transcript Pages 36-39) does defendant own any patent or patents covering reciprocators referred to in said deposition, and (b) if so, what are the numbers of such patent or patents?	(a) and (b) Defendant owns no patents on reciprocators as such, but does own Patent No. 2,808,343 which contains claims directed to a system that includes a reciprocator.

31

Plaintiff's Interrogatories	Answer
182.	182.
(a) With regard to defendant's "Pricing Guide for No. 2 Spray Process" dated July 15, 1953 (Exhibit JJJ-2) what basis was employed for arriving at Figure of forty percent of the initial fee as set forth in the third paragraph thereof, and	(a) The initial fee of Exhibit JJJ-2 for a non-equipment license, had one been desired, was expressed as 40 per cent of the initial fee for a license with equipment, the difference between said initial fees representing, on the average, the cost of the equipment furnished and installation supervision, plus a reasonable profit thereon.
(b) was the predetermined forty percent figure applicable regardless of the number or character of the patents involved, and	(b) Yes, because the initial fee is related to the value to the licensee of the system in operation and not to the number of patents involved.
(c) if (b) is answered in the negative identify any and all instances wherein the forty percent figure was varied to take into account different patent coverage?	(c) No answer required.
183.	183.
(a) As to the agreement No. 5228 with Avco Manufacturing Corp., was form No. 434 previously identified by defendant as D-29 allegedly adopted in April 1952, used in said agreement, and	(a) Yes.
(b) is said agreement, as modified in defendant's agreement letter of January 18, 1954, to Avco, still in force and effect, and	(b) Yes.
(c) does said agreement as executed include the "future inventions" Paragraph 11 of said form, and	(c) Yes.
(d) did such agreement as executed include the provision that "Ransburg shall have the right to terminate this agreement at any time after three years from the date of Ransburg's acceptance hereof upon six month's written notice to user"?	(d) Yes.
187.	187. Without adopting Plaintiff's characterization of Defendant's marketing program, Defendant answers this Interrogatory as follows:
(a) Is it a fact that as a general rule in the majority of instances, the customer in leasing defendant's equipment is never advised by defendant as to the patent numbers of the patents being licensed in defendant's portfolio of patents and patent rights and	(a) Yes.

32

Plaintiff's Interrogatories	Answer
187. (cont'd) (b) that defendant's salesmen marketing leases and licenses are not advised as to what patents are applicable to proposed customers installations?	187. (cont'd) (b) Yes.
189. With regard to the electrostatic coating equipment agreements of defendant, (a) has any customer ever objected to the three-year termination clause of the leasing agreement, and (b) what is the identity of each and every such customer, and (c) which of such objections, if any, was made on the basis of the fact that the three-year termination provision was too harsh, or (d) on the basis that the customer felt that its use of the equipment after three years was entirely at the mercy of the defendant?	189. (a) Yes. (b) Those identified in the above answer to Interrogatory 184(b), Jones & Laughlin Steel Corp., and perhaps others who might be identified by a search of Defendant's customer files. (c) and (d) Defendant does not know what basis or reason may have prompted objection to the three-year termination provision. The reason usually expressed was that the provision created uncertainty in respect to availability of the system after expiration of the three-year period.
190. (a) Has the defendant's leased, electrostatic spray coating systems ever been used, as far as defendant knows, to fill orders of the United States government and on which fees or patent royalties have been paid to the defendant under a patent license, and (b) if so, what are the identities of all such leases, and (c) which of such leases, as far as defendant knows, involve war equipment made for the United States government?	190. (a) Yes. (b) and (c) Those listed in Exhibit M attached and perhaps others ascertainable by Plaintiff through the inspection of Defendant's customer files.
193. By the expression, "the possible competition by them" referred to in the letter of March 4, 1943, "Re: BRUSH LICENSE," (a) was reference made to possible competition by the Brush Development Company, with whom Harper J. Ransburg Company had previously entered into a license agreement dated September 19, 1942, and	193. (a) Defendant has no more knowledge of the significance of the quoted expression than appears from the letter itself.

Plaintiff's Interrogatories	Answer
(b) did defendant or its predecessor encounter any such competition by Brush Development Company after its Gravley patent (application Serial No. 313,914, filed January 15, 1940, patent No. 2,359,476, issued into letters patent on October 3, 1944), was acquired by assignment in 1943?	(b) No.
33	
196.	196.
(a) Is the following statement quoted from a letter dated May 6, 1941 to Western Electric Company from the Ransburg Company's Counsel factually true: "While, at the present time, our client is experimenting with spraying equipment primarily for their own products and in their own plant, it is contemplated that if it develops successfully and there is any demand, their interest would then extend to the sale or lease of such equipment to others," and,	(a) It is true, as far as it goes.
(b) when did the defendant or its predecessor, Harper J. Ransburg Company, first decide to enter the market in the leasing of electrostatic spraying coating equipment?	(b) The first commercial installations were in 1944, although various marketing systems were explored prior to that date.
197.	197.
(a) Is it a fact that the following quoted language — "in connection with flock deposition, flock-coated material, or in the manufacture of abrasives and coated abrasives"— on Page 3 of defendant's license agreement dated October 7, 1948 with Research Corporation of New York was included in such agreement because patent rights as to the named fields had been specifically previously reserved for Behr-Manning Corporation, and	(a) The quoted expression was included in Defendant's contract of October 7, 1948, with Research Corporation as a result of the latter's representation that it had previously granted Behr-Manning an exclusive license in respect to the subject matter referred to in such quoted expression.
(b) the said agreement of October 7, 1948 was consummated with Research Corporation by and with the full knowledge of Behr-Manning Corporation, and	(b) Yes.
(c) that further Behr-Manning entered into a supplemental agreement dated August 26, 1949 with the defendant wherein Behr-Manning among other things agreed to the following:	(c) Yes.

Plaintiff's Interrogatories	Answer
"1. Behr-Manning agrees to reimburse Ransburg for all payments heretofore or hereafter made by Ransburg to said Research Corporation under the said contract of October 7, 1948, as minimum royalties or in respect to the use or practice, within the United States of America, by Ransburg and its sublicensees, of the rights purportedly granted said Harper J. Ransburg Company under said Meston and Wintermute patents by the agreement of September 26, 1944; provided, however, that the maximum liability of Behr-Manning hereunder shall be the sum of Nine Thousand Three Hundred and Fifty Dollars ($9,350)."	
34	
198. Is it a fact that (a) during the negotiations between the defendant's predecessor company and Behr-Manning Corporation the defendant became advised in a letter dated May 20, 1941, of the fact that Minnesota Mining and Mfg. Co. had had an interest in certain of the patents and patent applications ultimately included in the license agreement dated September 26, 1944, consummated with Behr-Manning Corporation, and (b) that the proposal that the defendant's predecessor and Behr-Manning Corporation disclose to each other their respective patent applications was opposed by Mr. W. L. McKnight, president of Minnesota Mining and Mfg. Co., as set forth in the following quotation from the letter dated May 20, 1941, from Behr-Manning to the Ransburg Company: "We have just received a letter dated May 15, from Mr. W. L. McKnight, President of Minnesota Mining & Mfg. Company which contains the following statement: "'I have a very strong feeling that it is unwise to disclose these pending patent applications, particularly where there may be a conflict of interests and my natural inclination in this matter is that it would be a mistake to make these disclosures.' "This quotation refers, as I have	198. (a) Defendant's predecessor received and read the letter of May 20, 1941, from Behr-Manning Corporation, but had no direct knowledge at the time as to whether the asserted interest of Minnesota Mining & Mfg. Co. in patents and patent applications ultimately included in the license agreement dated as of September 26, 1944, with Behr-Manning Corp. was a fact. (b) Defendant does not know, and defendant's predecessor did not know, whether the asserted opposition of W. L. McKnight to the disclocure of patent applications to each other by Defendant's predecessor and Behr-Manning was a fact.

Plaintiff's Interrogatories	Answer
previously explained, particularly to the Smyser reissue application and to one or two other pending electrostatic applications which the Minnesota Company is solely prosecuting but over which Behr-Manning will eventually exercise control to acquisition by assignment." and	
(c) If any of the foregoing is true, what is the specific identity of all patents and patent applications ultimately licensed by Behr-Manning Corporation to the defendant in which the Minnesota Mining & Mfg. Company had previously had an interest?	(c) To the knowledge of Defendant and its predecessor, Reissue Patent 22,419, issued Jan. 11, 1944, to Minnesota Mining & Mfg. Co. Defendant does not have, and so far as it now knows its predecessor did not have direct knowledge of any in-
35	
198. (cont'd)	198. (cont'd) terest possessed by Minnesota Mining & Mfg. Co. in any of the other patents or patent application licensed by Behr-Manning Corporation to Defendant's predecessor was advised by Behr-Manning that Minnesota Mining & Mfg. Co. was prosecuting patent applications Serial Nos. 200,550; 662,319; 401,484 and 452,532; all of which were among those licensed to Defendant's predecessor by Behr-Manning.
199. (a) Did the defendant's predecessor write a letter dated July 3, 1944 to Behr-Manning Corporation wherein among other things, it said: "I know that you will be interested to learn that our patent position has been improved by the issuance of five patents to us, and the acquisition of the Pugh patent. We have also been fortunate in effecting some very constructive improvements on which we have applied for additional patents." and	199. (a) Yes.
(b) If the answer in the affirmative, what is the identity of the foregoing referred to five patents and (c) What is the identity of any applications or patents that were applied for or issued on the "constructive improvements" referred to in the foregoing quotation?	(b) Nos. 2,247,963; 2,270,341; 2,334,648; 2,335,790 and 2,359,476. (c) Serial No. 492,204 now Patent No. 2,417,798; Serial No. 516,256, now Patent No. 2,486,877; Serial Nos. 516,778 and 596,870, now Patent No. 2,546,701; Serial No. 519,333, now Patent No. 2,425,652; Serial No. 519,332, now Patent No. 2,428,991; Serial No. 540,648, now Patent No. 2,444,144; and Serial No. 540,627.

54 Exhibit "A."

Name of Licensee	Dates of Electrostatic Spray Coating Licenses With Air	Without Air
American Seating Co.		
Grand Rapids, Mich.	5- 5-48	12-18-52
		4- 6-56
		4- 6-56
Amerock Corporation		
Rockford, Illinois	5- 2-47	4- 2-56
		8-30-56
Avco Manufacturing Corp.	5-30-49	
Richmond, Indiana	5-30-49	
Nashville, Tennessee		2- 2-54
Bennett Industries, Inc.		
Peotone, Illinois	6-23-52	6-23-52
Birtman Electric Co.		
Rock Island, Illinois	1-31-49	
Chicago, Illinois		7-12-55
Briggs & Stratton Corp.		
Milwaukee, Wisconsin	9-14-49	2-17-55
Butler Manufacturing Co.		
Galesburg, Ill.	1-11-49	2-20-51
Kansas City, Missouri	1-11-49	
ChromCraft Corp.		
St. Louis, Missouri	10-11-54	5-25-51
Daystrom Furniture		
Olean, New York	7-11-50	5-15-56
Delta Electric Co.		
Marion, Indiana	9-18-46	6-12-51
Detroit Controls Corp.		
Detroit, Michigan	7-12-48	6-14-54
R. E. Dietz Mfg. Co.		
Syracuse, New York	11- 1-48	1-22-54
Eastern Venetian Blind Co.		
Baltimore, Maryland	3- 9-46	10-26-51
The Electric Auto-Lite Co.		
Cincinnati, Ohio	11-15-48	
Woodstock, Illinois	6- 4-56	

Name of Licensee	Dates of Electrostatic Spray Coating Licenses With Air	Without Air
Sharonville, Ohio		12-22-53
55 Evans Products Co.		
Plymouth, Michigan	3- 5-54	7-13-54
Friden Calculating		
Machine Co., Inc.	6-17-48	
San Leandro, Calif.	6-17-48	6- 7-56
Gabriel Company		
Cleveland, Ohio	1-16-49	7- 1-53
General Electric Company		
Everett, Massachusetts	2-28-56	
Owensboro, Kentucky	8-31-48	
Cleveland, Ohio		5- 7-56
Jonesboro, Arkansas		7-26-55
Rockford, Illinois		4- 4-55
Louisville, Kentucky		10-29-52
		4-13-54
		4-13-54
		7-27-54
		11-29-54
		12- 1-54
		8- 2-55
		2- 9-56
		2- 9-56
		2-15-56
		2-15-56
		3-12-56
New Kensington, Pa.		11-25-52
		6-22-53
		11-17-53
Geuder, Paeschke & Frey	7-18-47	4- 2-51
Milwaukee, Wisconsin		
Grand Sheet Metal Prod. Co.	5-20-49	
Melrose Park, Illinois	11- 6-52	11-12-54
Hamilton Manufacturing Corp.	10-21-47	10- 5-54
Columbus, Indiana		7-24-52
		7-24-52

Name of Licensee	Dates of Electrostatic Spray Coating Licenses With Air	Without Air
Herman Hassinger, Inc.	4- 3-50	1- 8-52
Philadelphia, Pa.		
Heintz Manufacturing Co.	6-11-54	12-18-53
Philadelphia, Pa.		4- 5-55
The Hoover Co.		
North Canton, Ohio	8- 5-47	4-11-56
Kirsch Company	3-22-50	6-23-52
Sturgis, Michigan		3-14-56
56 Kwikset Locks, Inc.		
Anaheim, California	6- 6-47	10- 6-53
The L... a Register Co.		
Lima, Ohio	9-30-47	6-29-54
The Lobdell-Emery Mfg. Co.		
Alma, Michigan	4-19-54	4-30-54
		8-29-55
Miro-Flex Co., Inc.	3-18-47	2- 2-53
Wichita, Kansas		1-30-52
		9- 9-52
Mitchell-Bentley Corp.		
Ionia, Michigan	8-17-56	7- 2-56
Norge Div., Borg-Warner Corp.	7-24-45	
Muskegon Heights, Michigan	7-11-49	
Effingham, Illinois		4-24-56
Herrin, Illinois		12-28-55
Norris-Thermador Corp.		
Los Angeles, California	9-10-47	7- 6-54
Proctor Electric Co.		
Philadelphia, Pa.	8-15-51	
Baltimore, Maryland	11-11-48	6-19-51
Rheem Manufacturing Co.		
South Gate, California	3-15-51	
Sparrows Point, Maryland	6- 2-47	
Chicago, Illinois	6-21-51	4- 7-55
Houston, Texas		8-30-55
Richmond, Calif. (Pacific All Fiber Drums)		7-13-53
Sheller Manufacturing Corp.	7-24-46	

	Name of Licensee	Dates of Electrostatic Spray Coating Licenses With Air	Without Air
	Portland, Indiana		9-18-50
	Shwayder Brothers	7-20-50	
	Pittsburgh, Pa.		5- 6-54
	Detroit, Michigan	6-27-52	
	Ecorse, Michigan		5- 6-54
			5-11-54
	Denver, Colorado		5- 3-55
	A. L. Smith Iron Co.	5- 1-49	
	Chelsea, Massachusetts		6-27-55
57	Speed Queen, Div. of	4-30-47	4-27-56
	McGraw Electric Co.	4-30-47	4-24-51
	Ripon, Wisconsin		
	Studebaker-Packard Corp.	7-15-52	
	South Bend, Indiana	7-15-52	12-21-54
	Thomas Industries, Inc.		
	Ft. Atkinson, Wisconsin	2- 8-55	
	Princeton, Kentucky		7- 8-53
			12-20-51
	United Specialties Co.	11- 1-54	
	Chicago, Illinois		6-14-54
	United Specialties of		
	Birmingham, Inc.,—Ala.		2-11-53
	John C. Virden Co.		
	Cleveland, Ohio	7- 7-45	1- 7-54
	Wheeling Steel Corp.	4-21-50	
	Yorkville, Ohio	10-27-45	
	Martins Ferry, Ohio		8-23-55
	The Walker Mfg. Co. of Wis.	1-24-49	
	Racine, Wisconsin	5-11-49	
	Walker-Mich. Div. Walker		10-18-54
	Mfg. Co. of Wis.		
	Jackson, Michigan		
	Whirlpool-Seeger Corp.	6- 1-49	
	St. Paul, Minnesota	6- 1-49	
	Clyde, Ohio		5- 8-52
			4-20-54
			6- 3-55

Name of Licensee	Dates of Electrostatic Spray Coating Licenses With Air	Without Air
		2-15-56
		2-15-56
Hamilton, Ohio		3-16-56
Marion, Ohio		6-16-55
St. Joseph, Michigan		11- 8-51
		12- 4-52
		12- 4-52
L. A. Young Spring & Wire Corp.		
Detroit, Mich.	8- 9-51	
	8- 9-51	
	5- 7-47	
	8- 9-51	3-27-52
		2- 7-55
Chicago, Illinois		11- 6-51

58 Exhibit "B".

Name of Licensees	Dates of Licenses
AMF Cycle Co.	2- 6-56
Little Rock, Ark.	2-23-53
The A. P. Parts Corp.	2- 1-55
Toledo, Ohio	2-25-48
Acme Visible Records, Inc.	2- 7-50
Chicago, Illinois	12-11-52
Acoustics Mfg. Corp.	6-30-55
Detroit, Mich.	
Admiral Corp.	6- 7-56
Chicago, Illinois	
Ainsworth Mfg. Co.	9- 5-48
Detroit, Mich.	
Air-Maze Corp.	1-11-52
Cleveland, Ohio	
Airway Finishing Corp.	10-31-50
Chicago, Illinois	4-16-51
Algonquin Corp.	11-21-52
Detroit, Michigan	

Name of Licensees	Dates of Licenses
All-Lite Mfg. Co. Chicago, Illinois	11- 2-48
All-Steel Equipment Inc. Aurora, Illinois	8-19-53 4-21-52 2-11-55 5-16-55 5-15-56 8-31-56
Allen Industries, Inc. Leland and G. T. R. R. Detroit 7, Michigan	10- 7-52
Alsa Mfg. Co. Philadelphia, Pa.	7-22-54
Alside, Inc. Akron, Ohio	4-16-48
Altex Corp. Milwaukee, Wis.	7- 9-52
Aluminum Goods Mfg. Co. Manitowoc, Wisconsin	7- 3-51
America & Southern Corp. Nashville, Tenn.	12-15-54
American Meter Co., Inc. Philadelphia, Pa.	3-29-56
American Motors Corp. Kenosha, Wis.	8- 4-55
American Radiator & Standard Sanitary Corp. Buffalo, N. Y.	7-23-48 3-21-56 4-16-56
American Seating Co. Grand Rapids, Mich.	5- 5-48 12-18-52 4- 6-56 4- 6-56
American Welding & Mfg. Co. Warren, Ohio	5- 7-48
Amerock Corp. Rockford, Illinois	8-30-54 4- 2-56
O. Ames Co. Parkersburg, W. Virginia	1-31-55
Anderson-Bolling Mfg. Co. Grand Haven, Mich.	6-15-55 11- 3-53

	Name of Licensees	Dates of Licenses
	Andwall Mfg. Co. Oconomowoc, Wisconsin	6-19-53
60	Angleton Finishing Co. Newark, N. J.	12-30-48
	Applied Arts Mfg. Corp. Grand Rapids, Mich.	1-26-56
	Armstrong Rubber Mfg. Co. Des Moines, Iowa	8-31-50
	The Arnold Engineering Co. Los Angeles, Calif.	7- 7-52
	Arnold, Schwinn & Co. Chicago, Illinois	12-19-49 9-13-51
	Arnot-Jamestown Div. Aetna Steel Prod. Corp. Jamestown, N. Y.	7- 2-56 7-11-56
	Arrow Safety Device Co. Mount Holly, N. J.	8-28-50
	Arvin Industries, Inc. Columbus, Indiana	1-19-49 9-20-51 12-18-51 8-21-52 10-11-51
	The Ashtabula Mfg. Co. Ashtabula, Ohio	1-31-56 7-26-54
	Associated Pacific Venice, Calif.	1-13-56
	The Atlanta Stove Works, Inc. Atlanta, Ga.	12- 1-54
	Atlas Mfg. Co. St. Paul, Minn.	5- 8-56
	Atlas Novelty Co. Chicago, Illinois	10- 1-48
	Atlas Plating Co. Div. Associated Baked Enameling Co. Los Angeles, Calif.	5-10-56
61	Auer Register Co. Cleveland, Ohio	1- 9-50
	D. L. Auld Company Columbus, Ohio	6-20-51

	Name of Licensees	Dates of Licenses
	Auto Specialties Mfg. Co., Inc. St. Joseph, Michigan	10-30-53
	Avco Mfg. Corp.	3-30-49
	Crosley-Bendix Div. Richmond, Ind.	2- 2-54
	B. M. C. Mfg. Corp. Binghamton, N. Y.	1-17-52
	Barler Metal Prods. Inc. Goshen, Ind.	10-19-49 3-22-51 10-28-54
	Bastian Blessing Co. Chicago, Illinois	4-17-49
	Baxter Steel Equip. Co. Indianapolis, Ind.	9-11-56
	Bell & Howell Chicago, Illinois	1-31-49 10-23-51 6- 8-56
	Bendix Aviation Corp. Eclipse Machine Division Elmira, New York	5-22-51
	Beneke Corp. Columbus, Miss.	12- 1-55
	Bennett Industries Peotone, Illinois	6-23-52
	Berger Mfg. Div. Republic Steel Corp.	2-17-48
	Berns Mfg. Corp. Chicago, Illinois	11- 8-50
	Otto Bernz Co. Rochester, N. Y.	9- 1-53
62	Bethlehem Steel Co., Inc. Sparrows Point, Md.	5- 7-56
	Binkley Mfg. Co. Warrenton, Mo.	2-12-51
	Birtman Electric Co. Chicago, Illinois	7-12-55 1-31-49
	Bishop & Babcock Mfg. Co. Cleveland, Ohio	4- 3-51 1-11-52
	Bissell Carpet Sweeper Co. Grand Rapids, Michigan	5- 7-56

Name of Licensees	Dates of Licenses
Blake Mfg. Co. Clinton, Mass.	10-15-48
William R. Bootz Mfg. Co. Evansville, Indiana	8- 3-53
The Borg-Erickson Corp. Chicago, Illinois	4- 9-48
Borg-Warner Corp. Ingersoll Steel Products Div. Chicago, Illinois	11- 6-51
Bowen Products Corp. Auburn, New York	12-10-51
Briggs Mfg. Co. Detroit, Michigan	2-24-48 9-16-53
Briggs & Stratton Milwaukee, Wis.	7- 1-53 9-14-49 2-17-55
Bristol Sheet Metal Co. Wallingford, Conn.	2- 2-53
The Brunhoff Mfg. Co. Cincinnati, Ohio	4-18-56
63 The Brunswick Balke Collender Co. Muskegon, Michigan	7-22-54
Bryant Heater Div. Affiliated Gas Equip., Inc. Tyler, Texas	7- 6-53
Buch Mfg. Co. Elizabethtown, Pa.	6-30-55
Bunting Co., Inc. Philadelphia, Pa.	9- 7-48 7-18-49
The Busch & Thiem Co. Sandusky, Ohio	9-13-48
Butler Mfg. Co. Kansas City, Mo.	1-11-49 2-20-51
C & H Air Conditioning Fan Co. Atlanta, Ga.	1-12-48
California Parkerizing Co. Oakland, Calif.	10- 2-48
Cameo Doll Products Div. Noma Electric Corp. Port Allegany, Pennsylvania	6-22-48

	Name of Licensees	Dates of Licenses
	Carey-McFall Co. Montoursville, Pa.	6-29-51
	Carolina Metal Prods., Inc. Charlotte, N. C.	7- 6-55
	Carter Craft, Inc. Plano, Texas	11- 1-48
	Carter Machine & Tool Co. Dubuque, Iowa	1-27-48
	J. I. Case Co. Bettendorf, Iowa	2-11-48
64	Ceco Steel Products Corp. Pittsburgh, Penn.	11-30-51 5-25-54
	Century Plastic Products Inc. Cleveland, Ohio	5-17-55
	Cessna Aircraft Co. Wichita, Kansas	5- 5-48
	Chelsea Products, Inc. Plainfield, N. J.	12-14-53
	Chicago Rawhide Mfg. Co. Elgin, Illinois	11- 4-55
	ChromCraft Corp. St. Louis, Mo.	5-25-51
	Chrysler Corp. Automotive Body Div. Detroit, Mich.	9- 7-54 9-27-54
	Clemson Bros., Inc. Middletown, N. Y.	1-14-48
	Cleveland Heater Co. Cleveland, Ohio	5- 6-48
	Clinton Machine Co. Maquoketa, Iowa	4-20-51
	Columbia Mills, Inc. Saginaw, Michigan	11-25-48
	Columbian Enameling & Stamping Co., Inc. Terre Haute, Indiana	11- 6-52
	Combustion Engineering Superheater, Inc. Chattanooga, Tenn.	3-19-48

	Name of Licensees	Dates of Licenses
	Conco Eng. Works Mendota, Illinois	10-31-50
	Consolidated Gen. Prods. Inc. Houston 8, Texas	12-15-48
	Continental Steel Corp. Kokomo, Indiana	3-10-48
65	Coona Corp. Jersey City, N. J.	3-25-53
	Croname, Inc. Chicago 13, Illinois	2-24-50
	Cronstroms Mfg., Inc. Minneapolis, Minn.	9-28-55
	Crown Can Company Erie Ave. at H. Street Philadelphia, Penn.	2- 9-48 4-30-54 3-14-55
	James Cunningham, Son & Co., Inc. Rochester, New York	10- 8-53
	Curtis Lighting Inc. Chicago, Illinois	10-17-55
	Daisy Mfg. Co. Plymouth, Mich.	2- 9-53
	Day & Night Div. Carrier Corp. Monrovia, Calif.	9- 1-48
	Daystrom Furniture Olean, N. Y.	7-11-50 5-15-56
	Dazey Corp. St. Louis, Mo.	7- 6-54
	Defiance Automatic Screw Co. Div. of The Zeller Corp. Defiance, Ohio	5-29-52
	Del-Val Div. J. W. Rex Co. Lansdale, Pa.	9-28-54
	Delta Electric Co. Marion, Indiana	6-12-51
	Detecto Scales, Inc. Brooklyn, N. Y.	3-26-48
66	Detroit Controls Corp. Detroit, Mich.	7-12-48 6-14-54

	Name of Licensees	Dates of Licenses
	Detroit Hardware Mfg. Co.	2- 2-53
	Detroit, Michigan	
	Detroit Harvester Co.	
	Moto-Mower Div.	5-25-55
	Richmond, Ind.	1-31-49
	Dexter Industries, Inc.	2- 9-55
	Sub. of Nat'l Brass Co.	
	Grand Rapids, Mich.	
	R. E. Dietz Mfg. Co.	11- 1-48
	Syracuse, N. Y.	1-22-54
	Ditzler Color Div.	10- 4-50
	Pittsburgh Plate Glass Co.	
	Detroit, Mich.	
	D-All Finishing Co.	12-26-51
	Chicago, Illinois	4- 4-52
	Doehler-Jarvis Div.	2-17-55
	National Lead Co.	
	Pottstown, Pa.	
	Dominion Electric Corp.	4-19-48
	Mansfield, Ohio	8-25-53
	Donaldson Co., Inc.	5-19-48
	St. Paul, Minn.	
	Dryden Rubber Div. Sheller Mfg. Co.	11-12-53
	Chicago, Illinois	
	C. A. Dunham Co.	4-13-51
	Chicago, Illinois	1-21-55
	E. I. DuPont de Nemours & Co.	1-18-49
	Wilmington, Delaware	11- 4-49
		8-27-52
		11- 6-52
		9-23-55
		4-26-56
67	Durham Mfg. Corp.	3-27-56
	Chicago, Illinois	
	Eagle Mfg. Co.	10-25-49
	Wellsburg, W. Va.	
	Eastern Venetian Blind Co.	6-14-49
	Baltimore, Md.	10-26-51

Name of Licensees	Dates of Licenses
Eaton Mfg. Co.	4-14-48
Cleveland 3, Ohio	11- 3-48
	3-13-51
	11- 4-53
	4-19-54
	6- 4-54
Eaton Metal Prod. Corp.	10-10-51
Omaha, Nebraska	
Eaton Metal Products Co.	10-23-51
Denver, Colorado	
Eldon Mfg. Company	9- 1-48
Los Angeles 1, California	
The Electric Auto Lite Co.	11-15-48
Cincinnati, Ohio	9-27-50
	3- 5-51
	2-22-51
	4-11-51
	12-22-53
	6- 4-56
Electrocraft, Inc.	10-27-53
Mukwonago, Wisconsin	
Electrolux Corp.	1-31-49
Old Greenwich, Conn.	
Emerson Electric Co.	4-14-48
St. Louis, Mo.	
Enameled Steel & Sign Co.	3-21-49
Chicago, Illinois	1- 3-50
	6- 5-50
	2-19-51
	12- 1-52
	3-22-56
Embury Manufacturing Co.	11-16-58
Warsaw, N. Y.	
68 Enamelers & Japanners	2-11-48
Chicago, Illinois	
Endemano Plating Co., Inc.	5-28-48
Huntington Park, California	
The Erie Art Metal Co.	11-14-55
Erie, Pa.	

Name of Licensees	Dates of Licenses
Evans Products Co.	3- 5-54
Plymouth, Michigan	7-13-54
Excelsior Mfg. Co.	12- 4-52
Michigan City, Ind.	
F. & N. Lawnmower Co.	8-16-48
Richmond, Indiana	
R. D. Fageol Co.	9-18-50
Detroit 11, Michigan	
Federal Fabricators & Finishers	6-12-56
Chicago, Illinois	11- 5-51
Fiat Metal Mfg. Co., Inc.	1-28-49
Long Island, N. Y.	11-16-48
Fluorescent Fixtures of Calif.	10-21-54
San Francisco, Calif.	
Firecraft Corp.	10-26-49
Chicago 32, Illinois	
Forgee Metal Products, Inc.	12- 9-53
Paulsboro, New Jersey	
Free Sewing Machine Company	3-21-50
Rockford, Illinois	
Friden Calculating Mach. Co., Inc.	6-17-48
San Leandro, Calif.	6- 7-56
The Frito Co.	3-16-53
Dallas, Texas	
Frontier Mfg. Co.	8-23-48
Dallas, Texas	
69 Fuller Brush Co.	5-28-48
Hartford, Conn.	
The Fyr-Fyter Co.	12-11-48
Dayton, Ohio	
Gabriel Co.	9- 7-48
Cleveland, Ohio	1-16-49
	7- 1-53
Gale Products	4- 7-52
Galesburg, Illinois	
Garland Mfg. Co.	8-20-56
Detroit, Mich.	
General Dry Batteries, Inc.	11-23-48
Cleveland, Ohio	

	Name of Licensees	Dates of Licenses
	General Electric Co.	10-29-52
	Schenectady, N. Y.	11-25-52
		6-22-53
		11-17-53
		4-13-54
		7-27-54
		11-29-54
		12- 1-54
		4- 4-55
		7-26-55
		8- 2-55
		2- 9-56
		3-12-56
		2- 9-56
		2-15-56
		2-28-56
		5- 7-56
	General Water Heater Corp.	6-29-54
	Burbank, Calif.	
	Gerity-Michigan Corp.	3-28-52
	Adrian, Michigan	
	Geuder, Paeschke & Frey	4- 2-51
	Lebanon, Ind.	
	Gibson Refrigerator Co.	8- 2-49
	Greenville, Michigan	
	Gibson Mfg. Co.	9-25-56
	Atlanta, Ga.	
70	Glenvale Products Div.	10-29-51
	Malvern, Arkansas	
	Globe Lighting Prod. Inc.	2- 9-55
	Los Angeles, Calif.	
	Goerlich's, Inc.	2-25-48
	Toledo, Ohio	8-11-49
	Goodyear Aircraft Corp.	3-30-50
	Akron, Ohio	
	The Graber Co.	10-22-51
	Middleton, Wisc.	
	Grammes, L. F. & Sons, Inc.	6-15-48
	Allentown, Pa.	10-20-52

	Name of Licensees	Dates of Licenses
	Grand Rapids Brass Co. Grand Rapids, Mich.	1-13-50
	Grand Rapids Metalcraft Div., F. L. Jacobs Co. Grand Rapids, Mich.	4-16-56
	Grand Sheet Metal Products. Co. Chicago, Illinois	5-20-49 10-18-50 11- 6-52 11-12-54
	Graphire Corp. New York, N. Y.	1-29-51
	Griffin Wheel Co. Chicago, Ill.	1-13-56
	Grigoleit Company Decatur, Illinois	1-24-51
	C. M. Hall Lamp Co. Detroit, Michigan	3-12-52
	Hamill Mfg. Co. Washington, Mich.	9- 6-56
	Hamilton Beach Co. Div. of Scoville Mfg. Co. Racine, Wisconsin	7- 1-54
	Hamilton Mfg. Corp. Columbus, Indiana	11-11-48 4- 5-50 7-24-52 10- 5-54
71	Hamilton Metal Products Co. Hamilton, Ohio	4- 5-48
	Hampden Specialty Prods. Inc. Easthampton, Mass.	9-12-55 8-14-56
	Hardy Mfg. Corp. Union City, Indiana	2-21-56
	Harvey Machine Co., Inc. Torrance, Calif.	7-24-51 2-15-52
	Herman Hassinger, Inc. Philadelphia 40, Pa.	4- 3-50 1- 8-52
	Health-Mor, Inc. Cleveland, Ohio	5-13-52
	M. M. Hedges Mfg. Co., Inc. Chattanooga, Tennessee	11-16-54

	Name of Licensees	Dates of Licenses
	Heineke & Co.	8- 6-49
	Springfield, Illinois	
	Heintz Mfg. Co.	12-18-53
	Philadelphia, Pa.	6-11-54
		4- 5-55
	Wm. Heller Co., Inc.	2- 6-56
	Altoona, Pa.	
	Hemp & Co.	2- 6-51
	Macomb, Illinois	11- 2-51
		11- 1-55
	Henry Furnace Co.	9-25-53
	Medina, Ohio	
	Hercules Building Corporation	11- 1-50
	Chicago, Illinois	
	Hillgren Mfg. Co.	1-19-48
	Huntington Park, Calif.	7-13-54
	Hoffmann Industries, Inc.	11- 2-51
	Sinking Spring, Pa.	
72	The Hoover Company	3- 6-50
	Kingston-Conley Div.	4-11-56
	No. Plainfield, N. J.	
	Hotpoint, Inc.	1- 1-49
	Milwaukee, Wisconsin	4- 7-52
		2-17-53
		2- 8-55
		8-31-56
	Houdaille-Hershey Corp.	10-18-51
	Buffalo 11, New York	11- 1-54
	The Huffman Mfg. Co.	2- 7-55
	Dayton, Ohio	
	Hydraulic Tools Corp.	11-25-52
	Sheboygan, Wisconsin	
	Ideal Brass Works, Inc.	5-16-56
	St. Paul, Minn.	
	Illinois Fabricators	4-10-53
	Kankakee, Illinois	
	Illinois Watch Case Co.	1-16-50
	Elgin, Illinois	

	Name of Licensees	Dates of Licenses
	Imperial Lamp & Shade Co. Philadelphia, Pa.	6-10-49
	Independent Lock Co. Fitchburg, Massachusetts	4-26-51
	Industrial Lamp Corp. Elkhart, Indiana	10-29-51
	Industrial Wire Cloth Products Corp. Wayne, Michigan	6-27-56
	Inland Steel Co. East Chicago, Illinois	4-20-55
	International Business Machines Corp.	1- 5-48
	Endicott, New York	2-15-56
	International Hardware Mfg. Co. Detroit, Michigan	7-22-54
73	International Harvester Co. Chicago 1, Illinois	8-11-53
	Interstate Precision Prod. Corp. Anaheim, California	4- 7-54
	Ironrite Inc.	3-15-50
	Mt. Clemens, Michigan	12-11-52
	Jackes-Evans Mfg. Co. St. Louis, Missouri	9- 8-53
	Jamestown Metal Corp.	10-18-48
	Jamestown, New York	7-10-51
	Jaybee Manufacturing Co. Los, Angeles, California	4-16-56
	Johns-Manville Products Waukegan, Illinois	5-20-52
	Jones & Laughlin Steel Corp. Pittsburgh 30, Pa.	1- 5-56
	H. L. Judd Company Wallingford, Connecticut	2-26-48
	Kaywood Corp. Benton Harbor, Michigan	11-15-48
	Keeler Brass Co.	8-19-48
	Grand Rapids, Michigan	12-10-54
	O. S. Keene Machine Co., Inc. Middlebury, Indiana	4-26-55
	Kent-Moore Organization, Inc. Jackson, Michigan	9-23-52

Name of Licensees	Dates of Licenses
Keystone Electric Mfg. Co.	2-20-52
Philadelphia 34, Pa.	9-20-54
King-Seeley Corp.	4-16-54
Scio, Michigan	
Kirsch Co.	3-22-50
Sturgis, Michigan	6-23-52
	3-14-56
74 Knox-Warrenton Company	1-26-51
Thomson, Georgia	
Koppers Company	1-10-51
Baltimore, Md.	
Kuehne Mfg. Co.	2- 6-51
Mattoon, Illinois	12-23-53
	3- 8-55
Kwikset Locks, Inc.	10- 6-53
Anaheim, Calif.	
L C N Closers, Inc.	12- 3-53
Princeton, Illinois	
Landers, Frary & Clark	8- 7-48
New Britain, Conn.	11-17-51
Lawn-Boy	11- 6-52
Div. of Outboard, Marine & Mfg. Co.	
Lamar, Mo.	
Lee Metal Products Co.	10- 5-48
Baltimore, Md.	
Lennox Industries, Inc.	4-10-56
Columbus, Ohio	
The Lima Register Co.	6-29-54
Lima, Ohio	
Lincoln Eng. Co.	8- 3-53
St. Louis, Mo.	
Lithonia Finishing Corp.	9-14-56
Conyers, Ga.	
The Lobdell-Emery Mfg. Co.	4-19-54
Alma, Michigan	4-30-54
	8-29-55
Lockvent	5-26-53
Chester, Va.	
Lonergan Mfg. Co.	10-23-51
Albion, Michigan	

	Name of Licensees	Dates of Licenses
	Los Angeles Parkerizing Co. Los Angeles, Calif.	2-14-55
	Lyle Signs, Inc. Minneapolis, Minn.	5-16-56
75	E. J. McAleer & Co., Inc. Philadelphia, Pa.	1-27-48
	Geo. F. McMurray Co. Burbank, Calif.	7-17-51
	Manhattan Castings, Inc. Paterson, New Jersey	2-17-49
	Manitowoc Equip. Works Div. of Manitowoc Co., Inc. Manitowoc, Wisconsin	1-12-55
	Maremont Automotive Prod., Inc. Harvey, Ill.	8-18-49
	Markstone Mfg. Co. Chicago, Ill.	12-14-49
	Martin-Parry Corp. Toledo, Ohio	6-30-48 9- 1-48
	The Maytag Co. Newton, Iowa	3-18-55
	Meldrum Mfg. & Eng. Co. St. Paul, Minn.	2- 1-52
	Melrose Lighting Co. Philadelphia, Pa.	10-13-55
	Metal Bed Rail Co., Inc. Lexington, N. C.	2-13-56
	Metal Industries, Inc. Indianapolis, Indiana	10-12-51 3-10-52
	Metal Mouldings Corp. Detroit, Mich.	6- 8-51
	Metalcraft Corp. Chicago, Illinois	4-23-54
	Metalcraft Prod., Inc. Philadelphia, Pa.	9-10-56
	Mid-City Processing Corp. Chicago, Illinois	1-29-48
	The Mid-West Chandelier Co. North Kansas City, Mo.	6- 8-56

	Name of Licensees	Dates of Licenses
76	Midwest Mfg. Corp.	7-26-55
	Sub. of Admiral Corp.	
	Galesburg, Ill.	
	The Miller Co.	10-16-53
	Utica, Ohio	
	Miller Bros.	7- 6-51
	Los Angeles, Calif.	
	Mills Metal Compartment Co.	3- 2-53
	Upper Sandusky, Ohio	
	Mimar Products Inc.	2-25-49
	Brooklyn, New York	
	Miro-Flex Co., Inc.	1-30-52
	Wichita, Kansas	9- 9-52
		2- 2-53
	The Mitchell-Bentley Corp.	7- 2-56
	Ionia Mfg. Co. Div.	8-17-56
	Ionia, Mich.	
	Mitchell Mfg. Co.	5-10-54
	Ft. Smith, Ark.	
	Modern Tool & Die Co.	3- 8-51
	Cleveland, Ohio	
	Moe Light Inc. (Thomas Ind.)	6-16-50
	Ft. Atkinson, Wisconsin	
	Mohawk Brush Co.	12- 4-52
	Albany, New York	
	Monark Silver King, Inc.	8- 5-54
	Chicago, Illinois	11-30-54
	Monroe Auto Equip. Co.	1-25-51
	Monroe, Michigan	1-11-54
		6-12-56
	Monroe Calculating Mach. Co.	4-26-48
	Orange, N. J.	
77	Motor Products Corp.	10-27-48
	Detroit, Michigan	
	Marion Industries Div.	6-13-50
	of Motor Products Corp.	
	Marion, Ohio	
	Mouldings Div. of	5-14-56
	Thompson Industries	7-30-56
	Indianapolis, Ind.	

	Name of Licensees	Dates of Licenses
	Mueller Climatrol Div. of Worthington Corp. Milwaukee, Wis.	2- 6-56
	The Murray Corp. of America Detroit, Michigan	7-27-49
	Murray-Ohio Mfg. Co. Lawrenceburg, Tenn.	4- 1-54
	National Engineering & Mfg. Co. Kansas City, Missouri	7- 6-53 10-18-54
	National Steel Construction Co. Seattle, Washington	8-23-48
	L. R. Nelson Mfg. Co., Inc. Princeville, Ill.	7-21-55
	Nesco, Inc. Milwaukee, Wisconsin	5-14-51 5-18-55
	Newark Stove Co. Newark, Ohio	9- 5-56
	Norge Div. Borg-Warner Corp. Muskegon Heights, Mich.	7-11-49 12-28-55 4-24-56
	Norris-Thermador Corp. Los Angeles, Calif.	7- 6-54
	National Lock Co. Rockford, Ill.	9- 1-48 11- 8-50
78	North Vernon Industries, Inc. North Vernon, Ind	3-22-56 4-25-56
	Northern Illinois Gas Co. Bellwood, Illinois	6-22-56
	Novi Equipment Co. Novi, Michigan	3- 8-49 1-13-54
	Nuside Metal Prod. Div. Sharon Coal & Ice Co. Sharon, Pa.	5-23-55
	Ny-lint Tool & Mfg. Co. Rockford, Illinois	11-25-53 5-15-51
	The Ohio Can & Crown Co. Massillon, Ohio	1-31-52
	Ohio Electric Mfg. Co. Cleveland, Ohio	4-10-53

	Name of Licensees	Dates of Licenses
	Olin Mathieson Chemical Corp. Olin Industries, Inc. East Alton, Illinois	1-10-51
	C. A. Olsen Mfg. Co. Div. Westinghouse Electric Corp. Elyria, Ohio	4-20-53 2-28-56
	Pacific All-Fiber Drums, Inc. Alhambra, Calif.	7- 5-51
	Pacific Iron & Steel Corp. of Los Angeles Los Angeles, Calif.	3- 3-52
	Pacific Paint & Varnish Co. Berkeley, Calif.	6-13-55
	Pal Products, Inc.	10- 8-51
	Northern Ind. Steel Supply Co., Inc. Michigan City, Ind.	5-31-55
79	Palmer Mfg. Co. Phoenix, Arizona	10-14-53
	Paper Mate Mfg. Co. Culver City, Calif.	5-21-56
	Pemco Corp. Research Div. Baltimore, Md.	8-21-56
	Penberthy Injector Co. Detroit, Michigan	12- 3-48
	Penco Metal Prods. Div. Alan Wood Steel Co. Philadelphia, Pa.	9-12-55
	Peninsular Metal Prods. Corp. Detroit, Mich.	9- 6-49 7- 7-52
	Penn Metal Corp. of Pa. Philadelphia, Pa.	1-12-53
	Pennsylvania Range Boiler Co. Philadelphia, Pa.	4-30-56
	Peoria Consolidated Mfgrs. Inc. Peoria, Illinois	9-11-52
	Perfection Finishing Corp. Wauseon, Ohio	12-13-54

	Name of Licensees	Dates of Licenses
	Perfection Industries Div.	3-30-56
	Hupp Corp.	
	Cleveland, Ohio	
	Philco Corp. Dexter Div.	9-10-51
	Alliance, Ohio	
	Pioneer Gen-E-Motor Corp.	8-14-50
	Chicago, Illinois	
	Pittsburgh Corning Corp.	7-19-55
	Port Allegheny, Pa.	
80	Pittsburgh Equitable Meter Div.	4- 6-49
	Rockwell Mfg. Co.	
	Pittsburgh, Pa.	
	Pittsburgh Plate Glass Co.	7- 1-55
	Milwaukee, Wis.	
	Fayette R. Plumb, Inc.	1- 4-49
	Philadelphia, Pa.	
	Pollak Eng. & Mfg. Corp.	1-30-48
	Arlington, New Jersey	
	Pollock Paper Corp.	5-31-49
	Middletown, Ohio	
	Poloron Products, Inc.	7- 1-53
	New Rochelle, N. Y.	9-22-55
	Poray, Inc.	8-20-53
	Chicago, Illinois	10-26-53
	Porcelain Enamel Products Corp.	10-17-52
	West Concord, Mass.	
	Precision Castings Co.	6- 4-52
	Kalamazoo, Michigan	
	Pressed Steel Tank Co.	12-30-48
	Milwaukee, Wisconsin	12-20-48
	Proctor Electric Co.	1- 4-49
	Philadelphia, Pa.	6-19-51
		8-15-51
	Production Enterprises, Inc.	1-28-49
	Brooklyn, N. Y.	
81	Progress Mfg. Co., Inc.	9-17-53
	Philadelphia, Pa.	1-18-56
	Providence Metalizing Co.	12-11-51
	Providence, Rhode Island	

	Name of Licensees	Dates of Licenses
	Public Service Electric & Gas Co.	8-24-51
	Newark, N. J.	
	Radio Steel & Mfg. Co.	10-26-55
	Chicago, Ill.	6- 8-56
	The Randall Co.	5-10-50
	Cincinnati, Ohio	
	Reading Hardware Corp.	1-10-50
	Reading, Pa.	
	Red Lion Cabinet Co.	1-31-55
	Red Lion, Pa.	
	The Regina Corp.	5-10-56
	Rahway, N. J.	
	Remington Arms Co., Inc.	4- 7-51
	Bridgeport, Conn.	10- 5-51
		9-17-52
	Reo Motors, Inc.	7- 8-52
	Lansing, Michigan	
	Paul R. Repath Co.	4- 3-52
	Los Angeles, Calif.	
	Republic Steel Corp.	4-20-55
	Canton, Ohio	
	Reynolds Metals Co.	5-18-48
	Louisville, Ky.	8-31-48
		12-30-52
	Quiet-Heet Manufacturing Co.	11-20-52
	Newark, N. J.	
82	Rheem Mfg. Co.	3-15-51
	South Gate, Calif.	4- 7-55
		8-30-55
		5- 7-51
		8-25-51
		7- 6-51
		6-21-51
	Roberts Mfg. Co.	6-21-51
	Cleburne, Texas	
	Rockwell Mfg. Co.	10-21-46
	Dubois, Pa.	
	Rockwell Mfg. Co.	5- 3-50
	Regulator Div.	3-22-51
	Norwalk, Ohio	

	Name of Licensees	Dates of Licenses
	Ronson Art Metal Works, Inc.	4-21-49
	Newark, N. J.	
	Royal Vacuum Cleaner Co.	11-17-48
	Cleveland, Ohio	
	F. C. Russell Co.	12-28-55
	Columbiana, Ohio	
	Ruud Mfg. Co.	12-30-48
	Kalamazoo, Mich.	
	Safety First Products Corp.	10- 5-51
	Elmsford, New York	
	St. John & Co.	7-25-52
	Chicago, Ill.	
	Sanymetal Prod. Co.	3-12-52
	Cleveland, Ohio	
	Savage Arms Corp.	3-12-48
	Chicopee Falls, Mass.	
	Sawhill Tubular Prod.	6-25-53
	Sharon, Pa.	
83	Schlage Lock Co.	1- 9-48
	San Francisco, Calif.	
	Scott Paper Company	3- 1-54
	Chester, Pa.	
	Scovill Mfg. Co.	5- 8-56
	Waterbury, Conn.	
	Screw Machine Prods. Co.	8-14-51
	Portland, Oregon	4- 7-54
	Security Plating Corp.	6-22-53
	Los Angeles, Calif.	
	L. J. Segil Co.	4-16-54
	Chicago, Ill.	
	Servel, Inc.	9- 2-48
	Evansville, Ind.	
	Seymour Tool & Engr. Co.	8- 8-49
	Seymour, Ind.	6- 6-50
		11-17-50
	Sheller Mfg. Co.	9-18-50
	Portland, Ind.	11-12-53
		4-22-54

	Name of Licensees	Dates of Licenses
	Shwayder Bros. Inc.	7-20-50
	Detroit, Mich.	6-27-52
		5- 6-54
		5-11-54
		5- 3-55
	Simonsen Metal Products Co.	1-23-50
	Chicago, Illinois	
	A. L. Smith Iron Co.	5- 4-49
	Chelsea, Mass.	6-27-55
84	Smith-Corona, Inc.	4- 9-56
	Groton, N. Y.	
	H. P. Snyder Co.	10-26-51
	Little Falls, N. Y.	
	Soreng Sampsel Time Control Inc.	6-12-50
	Spring Valley, Ill.	
	Southern Calif. Pipe & Steel Co.	2- 5-53
	Los Angeles, Calif.	
	Southern Calif. Gas. Co.	8-15-55
	Los Angeles, Calif.	
	Southern Pine Lumber Co.	10-31-55
	Diboll, Texas	
	Southern States Iron Roofing Co.	4- 8-52
	Savannah, Georgia	
	Speed Queen Corp.	11-23-49
	Ripon, Wisconsin	4-24-51
		4-27-56
	Spero Electric Corp.	4-22-49
	Cleveland, Ohio	
	Stamping Prods. & Mfg. Co.	4-19-48
	Detroit, Michigan	
	Standard Tank & Seat Co.	6- 9-55
	Camden, New Jersey	
	Standard Thompson Corp.	10-13-52
	Vandalia, Ohio	
	Stanley Home Products Inc.	2-18-48
	Westfield, Mass.	
	Stanley-Judd Div.	6- 7-51
	Stanley Works	
	Wallingford, Conn.	

	Name of Licensees	Dates of Licenses
85	Stant Mfg. Co.	3-28-51
	Connersville, Ind.	12- 3-51
	Steber Mfg. Co.	10- 5-53
	Broadview, Ill.	
	Steelcase, Inc.	4-19-48
	Grand Rapids, Mich.	
	Steger Prods. Mfg. Co.	11-16-48
	Steger, Ill.	
	Stor-All Corporation	8- 4-51
	Inglewood, Calif.	
	Stratton & Terstegge Co.	6-26-53
	Louisville, Ky.	
	Structo Mfg. Co.	11-12-54
	Freeport, Ill.	12-16-54
	Studebaker Corp.	9-16-48
	South Bend, Ind.	5-22-52
		7-15-52
		9-12-52
		10- 7-52
		12-21-54
	Sun Eng. & Mfg. Co., Inc.	8- 9-55
	St. Petersburg, Fla.	
	Sunbeam Corp.	7- 8-53
	Chicago, Ill.	6-29-54
		3-27-56
	Sunbeam Lighting Co.	5-23-55
	Los Angeles, Calif.	
	Swanson, Inc.	5-15-52
	Monroe, Ga.	
86	Sylvania Electric Prods. Inc.	C- 9-55
	Ann Arbor, Mich.	
	(formerly Argus Cameras, Inc.)	
	Taylor-Wharton Iron & Steel Co.	4-28-52
	Cincinnati, Ohio	
	Ternes Steel Co.	9-15-55
	Detroit, Mich.	
	Textile Machine Works	5- 9-49
	Reading, Pa.	

	Name of Licensees	Dates of Licenses
	Thomas Industries, Inc.	12-20-51
	Princeton, Ky.	7- 8-53
		2- 8-55
	Thompson Prods. Inc.	10-11-48
	Cleveland, Ohio	5- 9-49
		6-16-53
	Thor Corporation	12-29-52
	Chicago, Ill.	
	Timken Roller Bearing Co.	11-24-52
	Canton, Ohio	
	Tonka Toys, Inc.	5- 6-55
	Mound, Minn.	
	Troy Sunshade Co.	5- 1-52
	Troy, Ohio	
	Turnbull Mfg. & Dist. Co.	3- 8-48
	Detroit, Mich.	
	Turner Brass Works	10-19-48
	Sycamore, Ill.	
	Tusco Mfg. Co.	3- 2-48
	Gnadenhutten, Ohio	12- 2-53
87	Twin Cities Arsenal Federal	8-22-50
	Cartridge Corp.	3-21-51
	Minneapolis, Minn.	10-29-51
		2-26-52
	Underwood Corp.	2-21-56
	Hartford, Conn.	
	Union Hardware Co.	9- 7-49
	Torrington, Conn.	
	Union Metal Mfg. Co.	12- 6-48
	Canton, Ohio	
	Union Parts Mfg. Co., Inc.	4-26-55
	New Brunswick, N. J.	
	Union Steel Chest Corp.	7-13-49
	LeRoy, N. Y.	
	United Specialties of Birmingham, Inc.	2-11-53
	Birmingham, Ala.	
	United Specialties Co.	6-14-54
	Chicago, Ill.	11- 1-54

	Name of Licensees	Dates of Licenses
	U. S. Defense Corp.	2-26-52
	St. Louis Ordnance Plant	1-12-53
	St. Louis, Mo.	9-16-53
	United States Rubber Co.	1-23-48
	Mishawaka, Ind.	5- 5-50
	United Steel Barrel Co.	8-10-49
	Philadelphia, Pa.	
	United Stove Co.	9-21-49
	Detroit, Mich.	
88	VanBrode Milling Co., Inc.	3-10-55
	Clinton, Mass.	
	Vernco Corp.	6-12-56
	Columbus, Ind.	
	Vickers, Inc.	9-10-56
	Joplin, Mo.	
	Virco Mfg. Corp.	12-20-50
	Los Angeles, Calif.	
	Vulcan Containers, Inc.	9-19-51
	Bellwood, Ill.	
	E. R. Wagner Mfg. Co.	1- 2-49
	Milwaukee, Wisc.	5-23-55
	The Walker Mfg. Co.	1-24-49
	Racine, Wis.	5-11-49
	Walker-Michigan Div.	10-18-54
	Walker Mfg. Co. of Wisc.	
	Jackson, Michigan	
	Wallkill Mach. Works, Inc.	6-18-48
	Walden, N. Y.	
	Waterman-Waterbury Co.	4-27-56
	Minneapolis, Minn.	
	Waverly Prods., Inc.	6-15-55
	Kansas City, Mo.	
	The Wayne Pump Co.	10-17-55
	Salisbury, Md.	
	The Weatherhead Co.	6- 3-48
	Cleveland, Ohio	5- 1-49
	Webcor, Inc.	6-29-54
	Chicago, Ill.	

	Name of Licensees	Dates of Licenses
	Webster-Chicago Corp. Chicago, Ill.	12-12-50
89	Western Tool & Stamping Co. Des Moines, Iowa	3- 1-50 5-11-56
	Westinghouse Electric Corp. Metuchen, N. J.	6-27-55 5- 7-56 7-2-56
	Wheeling Steel Corp. Wheeling, W. Va.	7-26-48 4-21-50 8-23-55
	Whirlpool-Seeger Corp. St. Paul, Minn.	6- 1-49 11- 8-51 5- 8-52 6-17-52 12- 4-52 4-30-54 6- 3-55 6-16-55 2-15-56 3-16-56
	Wilshire Mfg. Co. Los Angeles, Calif.	5- 4-53
	Walter C. Williams Co. Wilkes-Barre, Pa.	3- 6-52
	Winchester Repeating Arms Co. New Haven, Conn.	1-12-51
	Window Controls, Inc. Millville, N. J.	6-19-53
	The Wood Shovel & Tool Co. Piqua, Ohio	11-27-53
	The Woodlin Metal Prod. Co. Marshall, Michigan	10-14-53
90	Albert Wright, Defense Div. Accurate Screw Machine Products Emeryville, Calif.	9-12-51
	Yale & Towne Mfg. Co. Stamford Div. Stamford, Conn.	9-15-50
	Yoder Mfg. Co. Los Angeles, Calif.	5-11-48

Name of Licensees	Dates of Licenses
L. A. Young Spring & Wire Corp.	8- 9-51
Detroit, Mich.	11- 6-51
	6- 1-49
	9-13-50
	3-27-52
	2- 7-55
The Youngstown Steel Door Co.	1-20-48
Youngstown, Ohio	
Youngstown Sheet & Tube Co.	8-13-48
Youngstown, Ohio	3- 7-50
	3-29-50

Exhibit "C".

Licensees

91

Ainsworth Mfg. Corp.
Detroit, Michigan
All-Lite Mfg. Co.
Chicago, Illinois
American Radiator & Standard Sanitary Corp.
Buffalo, New York
Auto Specialties Mfg. Co.
St. Joseph, Michigan
Bastian-Blessing Co.
Chicago, Illinois
Blake Mfg. Co.
Clinton, Mass.
California Parkerizing Co.
Oakland, California
Columbia Mills, Inc.
Saginaw, Michigan
Corona Corp.
Jersey City, New Jersey
Day & Night Div.
Carrier Corp.
Monrovia, California
R. E. Dietz Mfg. Co.
Syracuse, New York

Eastern Venetian Blind Co.
Baltimore, Maryland
Embury Mfg. Co.
Warsaw, New York
Gabriel Co.
Cleveland, Ohio
International Business Machines Corp.
Endicott, New York
Jamestown Metal Corp.
Jamestown, New York
Kaywood Corp.
Benton Harbor, Michigan
92 Keeler Brass Co.
Grand Rapids, Michigan
Kirsch Co.
Sturgis, Michigan
Landers, Frary & Clark
New Britain, Conn.
Lennox Industries, Inc.
Columbus, Ohio
Litecontrol Corp.
Watertown, Mass.
Martin-Parry Corp.
York, Pa.
Mimar Products, Inc.
Brooklyn, New York
Na-Ber Mfg. Co.
Dallas, Texas
National Lock Co.
Rockford, Illinois
National Tube Co.
McKeesport, Pa.
Ohio Can & Crown Co.
Canton, Ohio
Reading Hardware Corp.
Reading, Pa.
Sheller Mfg. Corp.
Portland, Indiana
A. L. Smith Iron Co.
Chelsea, Mass.
Sure-Heat Stove Co.

Dallas, Texas
Thompson Products
Cleveland, Ohio
Torrington Mfg. Co.
Torrington, Conn.
93 Union Steel Chest Corp.
LeRoy, New York
V-M Corporation
Benton Harbor, Michigan
Venetian Mfg. Co.
Baltimore, Md.
E. R. Wagner Mfg. Co.
Milwaukee, Wisconsin
Walker Mfg. Co.
Racine, Wisconsin
Weatherhead Co.
Cleveland, Ohio
Wheeling Steel Corporation
Wheeling, West Virginia
L. A. Young Spring & Wire
Detroit Moulding Div.
Detroit, Michigan

141 Exhibit D-23.

Adopted April 1951.

Serial No. .....

Ransburg Electro Spray Agreement.

This agreement, entered into this ..... day of ..... , 19..... , by and between Ransburg Electro-Coating Corp., an Indiana corporation, having its principal place of business at Indianapolis, Indiana, hereinafter called "Ransburg," and ..... , hereinafter called "User," Witnesseth That:

Whereas, Ransburg is the owner of, or otherwise has the right to grant licenses under, certain inventions, letters

patent of the United States, or patent applications pertaining to and covering methods and apparatus used in coating articles with electrostatically atomized and electrostatically deposited liquid coating material, the process so used being hereinafter referred to as "said Process," has acquired much engineering data and experience pertaining to said Process, has designed special equipment therefor, and is conducting research in that field; and

Whereas, User desires to use said Process and in so doing to avail itself of the experience gained by Ransburg in this field and requests that Ransburg furnish certain special equipment herein below described.

Now, therefore, it is mutually agreed as follows:

1. License: In consideration of the payment by Us of the fees herein provided, Ransburg hereby grants to User, subject to and in accordance with all of the terms and conditions of this agreement and while the same is in effect, the right to use said Process at User's plant in ..... with one unit as shown in Ransburg's drawing No. ..... subject to such changes therein and such further specifications as Ransburg may prescribe, for electrostatically spraying .....

.....

2. Equipment: Ransburg will furnish User for its use of said Process high voltage, atomizing, and liquid supply apparatus and electrical controls therefor and such other equipment as Ransburg deems desirable, which will be shipped prepaid to User's aforesaid plant upon request of User but subject to the availability to Ransburg of the necessary component parts of the equipment and prior shipment commitments of Ransburg. Ransburg will supply replacements, without charge, of any defective parts of its equipment except where the defect results from improper use or operation or negligence of User, and provided User returns such defective parts to Ransburg within

thirty days after they become defective. User shall furnish all labor, materials, and equipment necessary for the use of said Process except the equipment to be furnished by Ransburg in accordance with this paragraph.

3. Supervision: Ransburg will furnish supervision necessary to placing its equipment in readiness for operation. Should Ransburg's supervisor make more than one trip to the plant of User or be delayed there for any cause not chargeable to Ransburg, then for each day of such trip or trips or of such delay, User shall pay Ransburg the sum of Seventy-five dollars and any necessary transportation expenses incurred thereby.

4. Conversion: Ransburg will grant, upon written request by User, the right to use said Process otherwise than as described in Paragraph 1 unless in Ransburg's opinion the requested use involves unsafe practices or impractical conditions or is in conflict with the policies or commitments of Ransburg. Such conversion shall be made only after Ransburg has agreed thereto in writing.

5. Liability: User agrees that Ransburg shall not be liable to User for any claim resulting from the use, operation, or condition of the equipment furnished by Ransburg. User further agrees to reimburse Ransburg for any loss which may be sustained as a result of any liability to third parties for any claim resulting from the use, operation, or condition of the equipment furnished by Ransburg while said equipment is in the possession or custody of User.

6. Use of Equipment: User agrees to follow Ransburg's safety and operating recommendations and to maintain Ransburg's equipment in as good repair as when installed, ordinary wear and tear from proper use and operation alone excepted. User agrees that it shall not use or operate Ransburg's equipment with any of the parts or safety devices removed and to reimburse Ransburg for

loss of or damage to Ransburg's equipment while in User's possession or custody.

7. Title: Title to all equipment furnished by Ransburg shall at all times remain in Ransburg, and said equipment shall remain personal property regardless of how it is affixed to the realty. Ransburg shall have at all times, during business hours, the right to enter User's premises for the purpose of determining whether its equipment and said Process are being used as herein provided. User shall not have the right, without the written consent of Ransburg, to (1) lease or grant the right to use the equipment furnished by Ransburg to any person, firm, or corporation, (2) remove it from the plant to which it is delivered for installation, or (3) use it for any purpose or in any manner other than as herein provided. Upon termination of this agreement, User agrees to deliver the equipment furnished by Ransburg, freight prepaid, to Ransburg at Indianapolis, Indiana in as good condition as when installed, ordinary wear and tear incident to its proper use and operation alone excepted.

8. Performance: The performance of the obligations of both parties hereunder is subject to strikes and lockouts, whether in the organization of either party or elsewhere, and to accidents, fires, delays in manufacture or transportation, acts of God, embargoes or any governmental action as well as any causes for postponement or non-performance over which the parties have no control; and any failure, due to any of such causes, of either party to perform any of its obligations herein set forth shall not be considered a violation of this agreement.

142 9. Termination: User shall have the right to terminate this agreement at any time upon thirty days' written notice to Ransburg provided User has fulfilled its obligations hereunder and returns Ransburg's equipment prepaid to Ransburg within thirty days after such notifica-

tion in as good condition as when installed, ordinary wear and tear from proper use and operation alone excepted. Ransburg shall have the right to terminate this agreement at any time after three years from the date hereof upon six months' written notice to User.

In the event User shall fail to perform any of the conditions or obligations of this agreement, and such failure shall continue or recur after written notice thereof from Ransburg, Ransburg may (without prejudice to its rights to recover any amounts owing by User as herein provided or any damages for breach of this agreement) terminate this agreement and take possession of its equipment, and for that purpose permission is hereby given Ransburg or any of its agents to enter any premises wherein its equipment is located, to discover and take possession of its equipment without notice and without being liable to any suit, action, indictment, or other proceedings by User or anyone claiming under it. Any delay, concession, or indulgence on the part of Ransburg in enforcing any of its rights on any default shall not be deemed a waiver of such rights.

10. Fees: User agrees to pay to Ransburg an initial fee of ..... within sixty days after date of shipment of Ransburg's equipment or thirty days after date of installation thereof, whichever occurs earlier. In the event User has not requested shipment of Ransburg's equipment within six months of the date of this agreement, one-half of the initial fee shall become due and payable forthwith and the balance of it shall be due and payable as provided hereinabove. User further agrees to pay Ransburg on or before the tenth day of each calendar month during the life of this agreement, a monthly fee

Monthly fees under this agreement shall start with the date of installation of Ransburg's equipment or thirty days after the date of shipment thereof from Ransburg's plant, whichever occurs earlier, and the first payment shall be made on or before the tenth day of the calendar month following. For the first and last payments of monthly fees under this agreement, the basic minimum monthly fee of One Hundred Dollars ($100.00) shall be prorated according to the portion of the month for which it is payable.

In addition to the above fees, User agrees to pay; or to reimburse Ransburg if it should be obliged to pay, directly or indirectly any taxes, licenses, or fees imposed by the laws of any State, of any political subdivision, of any municipality, or of any other governmental authority by reason of the installation, possession, use, or location of any equipment furnished by Ransburg pursuant to this agreement. Such sums as may be due under this provision shall be paid separately or added to the invoice for other payments as the law may require or as Ransburg may determine.

If User does not request shipment of Ransburg's equipment prior to the expiration of six months after the date of this agreement, Ransburg shall have the right prior to shipment of its equipment to change the fees and conditions of this agreement to conform to its policy as of the date of such shipment.

During the term of this agreement, the basic minimum monthly fee of One Hundred Dollars ($100.00) set forth above and the sum set forth in Paragraph 3 shall from time to time be adjusted commensurately with changes, from the value for November 15, 1950, in the Consumer's Price Index for Moderate-Income Families in Large Cities, as determined by the Bureau of Labor Statistics of the U. S. Department of Labor, on the 1935-39 base; provided, however, that only a change of at least ten percentage

points in the value of said Index shall require any such adjustment.

Upon request of Ransburg, User shall supply Ransburg with a written report showing the monthly quantity of coating material used in said unit and the cost to User of said coating material. User agrees to keep permanent books of account from which the correctness of said written reports can be verified and agrees that such books of account shall be open to inspection by Ransburg or its duly authorized representatives at any time during User's regular business hours.

11. Future Inventions: User agrees that in the event User acquires, from any source, any inventions, improvements or letters patent, domestic or foreign, relating to methods and/or apparatus involving the electrostatic atomization of liquids, Ransburg shall have with respect to coating apparatus and methods employing said inventions, improvements, and the subject matter of said letters patent, a royalty-free, non-exclusive, assignable license, with right to sub-license, such license to be irrevocable except upon voluntary surrender by Ransburg. Patents subject to Ransburg's rights under this paragraph shall include only patents acquired by User during the term of this agreement, patents acquired by User within two years following termination of this agreement, and patents whenever acquired by User which cover inventions and improvements made within the term of this agreement or within two years following its termination.

12. Execution of Agreement: This agreement sets forth the entire agreement and understanding between the parties as to the subject matter of this agreement, and no statements, conditions, or representations, either oral or written, made by the parties, their employees, or agents, including conditions or provisions appearing in any purchase order or other instrument issued by User, shall be

vaid or binding unless contained in a written instrument signed by both parties.

All the rights and privileges of Ransburg hereunder shall be extended to and inure to the benefit of the successors in business or assigns of Ransburg upon User being given written notice of the assignment of this agreement to such successors in business or assigns and upon the written acceptance by such successors in business or assigns of all Ransburg's obligations hereunder.

This agreement is submitted in quadruplicate for execution by User. It shall become a contract upon its acceptance by Ransburg at Ransburg's home office in Indianapolis, Indiana, and effective under the laws of the State of Indiana as of the date first above written.

In Witness Whereof, the parties have caused this agreement to be executed as of the day, month, and year first above written.

.....(User)

By.....

(Title)

Accepted at the Home Office in Indianapolis, Indiana,

Ransburg Electro-Coating Corp. (Ransburg),

By.....

(Title).

Form No. 428.

145 Exhibit D-25.

Adopted Oct. 1951.

Serial No.....

Ransburg Electro-Spray Agreement.

This agreement, entered into this .....day of ....., 19....., by and between Ransburg Electro-Coating Corp., an Indiana corporation, having its principal place of business at Indianapolis, Indiana, hereinafter called "Ransburg," and .....

....., hereinafter called "User,"

Witnesseth That:

Whereas, Ransburg is the owner of, or otherwise has the right to grant licenses under, certain inventions, letters patent of the United States, or patent applications pertaining to and covering methods and apparatus used in coating articles with electrostatically atomized and electrostatically deposited liquid coating material, the process so used being hereinafter referred to as "said Process," has acquired much engineering data and experience pertaining to said Process, has designed special equipment therefor, and is conducting research in that field; and

Whereas, User desires to use said Process and in so doing to avail itself of the experience gained by Ransburg in this field and requests that Ransburg furnish certain special equipment herein below described.

Now, therefore, it is mutually agreed as follows:

1. License: In consideration of the payment by User of the fees herein provided, Ransburg hereby grants to User, subject to and in accordance with all of the terms and conditions of this agreement and while the same is in effect, the right to use said Process at User's plant in.....

....., with one unit as shown in Ransburg's drawing No. ....., subject to such changes therein and such further specifications as Ransburg may prescribe for electrostatically spraying .....

.....

2. Equipment: Ransburg will furnish User, for its use of said Process, high voltage, atomizing, and liquid supply apparatus and electrical controls therefor and such other equipment as Ransburg deems desirable, which will be shipped prepaid to User's aforesaid plant upon request of User. Ransburg will furnish replacements, without charge, of any defective parts of its equipment, except where the defect results from improper use or operation or negligence of User, and provided User returns such defective parts to Ransburg within thirty days after they become defective. The furnishing of equipment and replacements by Ransburg is subject to the availability to Ransburg of the necessary component parts of the equipment and replacements and to prior shipment commitments of Ransburg. User shall furnish all labor, materials, and equipment necessary for the use of said Process except the equipment to be furnished by Ransburg in accordance with this paragraph.

3. Supervision: Ransburg will furnish supervision necessary to placing its equipment in readiness for operation. Should Ransburg's supervisor make more than one trip to the plant of User or be delayed there for any cause not chargeable to Ransburg, then for each day of such trip or trips or of such delay, User shall pay Ransburg the sum of Seventy-five dollars and any necessary transportation expenses incurred thereby.

4. Conversion: Ransburg will grant, upon written request by User, the right to use said Process otherwise than as described in Paragraph 1 unless in Ransburg's opinion the requested use involves unsafe practices or impractical conditions or is in conflict with the policies or commitments

of Ransburg. Such conversion shall be made only after Ransburg has agreed thereto in writing.

5. Liability: User agrees that Ransburg shall not be liable to User for any claim resulting from the use, operation, or condition of the equipment furnished by Ransburg. User further agrees to reimburse Ransburg for any loss which may be sustained as a result of any liability to third parties for any claim resulting from the use, operation, or condition of the equipment furnished by Ransburg while said equipment is in the possession or custody of User.

6. Use of Equipment: User agrees to follow Ransburg's safety and operating recommendations and to maintain Ransburg's equipment in as good condition as when installed, ordinary wear and tear from proper use and operation alone excepted. User agrees that it shall not use or operate Ransburg's equipment with any of the parts or safety devices removed and to reimburse Ransburg for loss of or damage to Ransburg's equipment while in User's possession or custody.

7. Title: Title to all equipment furnished by Ransburg shall at all times remain in Ransburg, and said equipment shall remain personal property regardless of how it is affixed to the realty. Ransburg shall have at all times, during business hours, the right to enter User's premises for the purpose of determining whether its equipment and said Process are being used as herein provided. User shall not have the right, without the written consent of Ransburg, to (1) lease or grant the right to use the equipment furnished by Ransburg to any person, firm, or corporation, (2) remove it from the plant to which it is delivered for installation, or (3) use it for any purpose or in any manner other than as herein provided. Upon termination of this agreement, User agrees to deliver the equipment furnished by Ransburg, freight prepaid, to Ransburg at Indianapolis, Indiana, in as good condition as when installed, ordinary

wear and tear incident to its proper use and operation alone excepted.

8. Performance: The performance of the obligations of both parties hereunder is subject to strikes and lockouts, whether in the organization of either party or elsewhere, and to accidents, fires, delays in manufacture or transportation, acts of God, embargoes or any governmental action, as well as any causes for postponement or non-performance over which the parties have no control; and any failure, due to any of such causes, of either party to perform any of its obligations herein set forth shall not be considered a violation of this agreement.

146 9. Termination: User shall have the right to terminate this agreement at any time upon thirty days' written notice to Ransburg, provided User has fulfilled its obligation hereunder and returns Ransburg's equipment prepaid to Ransburg within thirty days after such notification in as good condition as when installed, ordinary wear and tear from proper use and operation alone excepted. Ransburg shall have the right to terminate this agreement at any time after three years from the date hereof upon six months' written notice to User.

In the event User shall fail to perform any of the conditions or obligations of this agreement, and such failure shall continue or recur after written notice thereof from Ransburg, Ransburg may (without prejudice to its rights to recover any amounts owing by User as herein provided or any damages for breach of this agreement) terminate this agreement and take possession of its equipment, and for that purpose permission is hereby given Ransburg or any of its agents to enter any premises wherein its equipment is located, to discover and take possession of its equipment without notice and without being liable to any suit, action, indictment, or other proceedings by User or anyone claiming under it. Any delay, concession, or indul-

gence on the part of Ransburg in enforcing any of its rights on any default shall not be deemed a waiver of such rights.

10. Fees: User agrees to pay to Ransburg an initial fee of .....
....., within sixty days after date of shipment of Ransburg's equipment or thirty days after date of installation thereof, whichever occurs earlier. In the event User has not requested shipment of Ransburg's equipment prior to the termination of this agreement or within six months of the date of this agreement, whichever is earlier, one-half of the initial fee shall become due and payable forthwith and the balance of it shall be due and payable as provided hereinabove. User further agrees to pay Ransburg, on or before the tenth day of each calendar month during the life of this agreement, a monthly fee

Monthly fees under this agreement shall start with the date of installation of Ransburg's equipment or thirty days after the date of shipment thereof from Ransburg's plant, whichever occurs earlier, and the first payment shall be made on or before the tenth day of the calendar month following. For the first and last payments of monthly fees under this agreement, the basic minimum monthly fee of One Hundred Dollars ($100.00) shall be prorated according to the portion of the month for which it is payable.

In addition to the above fees, User agrees to pay, or to reimburse Ransburg if it should be obliged to pay, directly or indirectly any taxes, licenses, or fees imposed by the laws of any State, of any political subdivision, of any municipality, or of any other governmental authority by reason of the installation, possession, use, or location of any equipment furnished by Ransburg pursuant to this agreement. Such sums as may be due under this provision shall be paid separately or added to the invoice for other

payments as the law may require or as Ransburg may determine.

If User does not request shipment of Ransburg's equipment prior to the expiration of six months after the date of this agreement, Ransburg shall have the right prior to shipment of its equipment to change the fees and conditions of this agreement to conform to its policy as of the date of such shipment.

During the term of this agreement, the basic minimum monthly fee of One Hundred Dollars ($100.00) set forth above and the sum set forth in Paragraph 3 shall from time to time be adjusted commensurately with changes, from the value for November 15, 1950, in the Consumer's Price Index for Moderate-Income Families in Large Cities, as determined by the Bureau of Labor Statistics of the U. S. Department of Labor, on the 1935-39 base; provided, however, that only a change of at least ten percentage points in the value of said Index shall require any such adjustment.

Upon request of Ransburg, User shall supply Ransburg with a written report showing the monthly quantity of coating material used in said unit and the cost to User of said coating material. User agrees to keep permanent books of account from which the correctness of said written reports can be verified and agrees that such books of account shall be open to inspection by Ransburg or its duly authorized representatives at any time during User's regular business hours.

11. Future Inventions: User agrees that in the event User acquires, from any source, any inventions, improvements, or letters patent, domestic or foreign, comprehending subject matter usable in any way in connection with methods or apparatus for the electrostatic atomization of liquids or for coating with electrostatically atomized

liquids, Ransburg shall have with respect to coating methods and apparatus employing said invention, improvements, and the subject matter of said letters patent, a royalty-free, non-exclusive, assignable license, with right to sub-license, such license to be irrevocable except upon voluntary surrender by Ransburg. Patents subject to Ransburg's rights under this paragraph shall include only patents acquired by User during the term of this agreement, patents acquired by User within two years following termination of this agreement, and patents whenever acquired by User which cover inventions and improvements made within the term of this agreement or within two years following its termination.

12. Execution of Agreement: This agreement sets forth the entire agreement and understanding between the parties as to the subejct matter of this agreement, and no statements, conditions, or representations, either oral or written, made by the parties, their employees, or agents, including conditions or provisions appearing in any purchase order or other instrument issued by User, shall be valid or binding unless contained in a written instrument signed by both parties.

All the rights and privileges of Ransburg hereunder shall be extended to and inure to the benefit of the successors in business or assigns of Ransburg upon User being given written notice of the assignment of this agreement to such successors in business or assigns and upon the written acceptance by such successors in business or assigns of all Ransburg's obligations hereunder.

This agreement is submitted in quadruplicate for execution by User. It shall become a contract upon its acceptance by Ransburg at Ransburg's home office in Indianapolis, Indiana, and effective under the laws of the State of Indiana as of the date first above written.

In Witness Whereof, the parties have caused this agreement to be executed as of the day, month, and year first above written.

..... (User)

By .....

(Title)

Accepted at the Home Office in Indianapolis, Indiana, Ransburg Electro-Coating Corp. (Ransburg)

By .....

(Title)

Form No. 430.

147. Exhibit D-26.

Adopted Feb. 1952.

Serial No.....

Ransburg Electro-Spray Agreement.

This agreement, entered into by and between Ransburg Electro-Coating Corp., an Indiana corporation, having its principal place of business at Indianapolis, Indiana, hereinafter called "Ransburg," and .....

....., hereinafter called "User,"

Witnesseth That:

Whereas, Ransburg is the owner of, or otherwise has the right to grant licenses under, certain inventions, letters patent of the United States, or patent applications pertaining to and covering methods and apparatus used in electrostatically depositing liquid spray particles formed by airless atomization (without the use of compressed air), the process so used being hereinafter referred to as "said Process," has acquired much engineering data and experi-

ence pertaining to said Process, has designed special equipment therefor, and is conducting research in that field; and

Whereas, User desires to use said Process and requests that Ransburg furnish certain special equipment hereinbelow described.

Now, therefore, it is mutually agreed as follows:

1. License: In consideration of the payment by User of the fees herein provided, Ransburg hereby grants to User, subject to and in accordance with all of the terms and conditions of this agreement and while the same is in effect, the right to use said Process at User's plant in

.....

with one unit as shown in Ransburg's drawing No....., subject to such changes therein and such further specifications as Ransburg may prescribe, for electrostatically coating.....

.....

2. Equipment: Ransburg will furnish, User, for its use of said Process, high voltage, atomizing, and liquid supply apparatus and electrical controls therefor and such other equipment as Ransburg deems desirable, which will be shipped prepaid to User's aforesaid plant upon request of User. Ransburg will furnish replacements, without charge, of any defective parts of its equipment, except where the defect results from improper use or operation or negligence of User, and provided User returns such defective parts to Ransburg within thirty days after they become defective. The furnishing of equipment and replacements by Ransburg is subject to the availability to Ransburg of the necessary component parts of the equipment and replacements and to prior shipment commitments of Ransburg. User shall furnish all labor, material, and equipment necessary for the use of said Process except the equipment to be furnished by Ransburg in accordance with this paragraph.

3. Supervision: Ransburg will furnish supervision necessary for placing its equipment in readines for operation. Should Ransburg's supervisor make more than one trip to the plant of User or be delayed there for any cause not chargeable to Ransburg, then for each day of such trip or trips or of such delay, User shall pay Ransburg the sum of Seventy-five Dollars and any necessary transportation expenses incurred thereby.

4. Conversion: Ransburg will grant, upon written request by User, the right to use said Process otherwise than as described in Paragraph 1 unless in Ransburg's opinion the requested use involves unsafe practices or impractical conditions or is in conflict with the policies or commitments of Ransburg. Such conversion shall be made only after Ransburg has agreed thereto in writing.

5. Liability: User agrees that Ransburg shall not be liable to User for any loss, cost, expense, or damage arising from any failure of said Process or equipment to function in any particular manner or to electrostatically spray any particular article or assembly, or for any claim resulting from the use, operation, or condition of the equipment furnished by Ransburg while said equipment is in the possession or custody of User. User further agrees to reimburse Ransburg for any loss which may be substained as a result of any liability to third parties for any claim resulting from the use, operation, or condition of the equipment furnished by Ransburg while said equipment is in the possession or custody of User.

6. Use of Equipment: User agrees to follow Ransburg's safety and operating recommendations and to maintain Ransburg's equipment in as good condition as when installed, ordinary wear and tear from proper use and operation alone excepted. User agrees that it shall not use or operate Ransburg's equipment with any of the parts or safety devices removed and to reimburse Ransburg for

loss of or damage to Ransburg's equipment while in User's possession or custody, ordinary wear and tear from proper use and operation alone excepted.

7. Title: Title to all equipment furnished by Ransburg shall at all times remain in Ransburg, and said equipment shall remain personal property regardles of how it is affixed to the realty. Ransburg shall have at all times, during business hours, the right to enter User's premises for the purpose of determining whether its equipment and said Process are being used as herein provided. User shall not have the right, without the written consent of Ransburg, to (1) lease or grant the right to use the equipment furnished by Ransburg to any person, firm, or corporation, (2) remove it from the plant to which it is delivered for installation, or(3) use it for any purpose or in any manner other than as herein provided. Upon termination of this agreement, User agrees to deliver the equipment furnished by Ransburg, freight prepaid, to Ransburg at Indianapolis, Indiana, in as good condition as when installed, ordinary wear and tear incident to its proper use and operation alone excepted.

148 8. Performance. The performance of the obligations of both parties hereunder is subject to strikes and lockouts, whether in the organization of either party or elsewhere, and accidents, fires, delays in manufacture or transportation, acts of God, embargoes or any governmental action as well as any causes for postponement or non-performance over which the parties have no control; and any failure, due to any of such causes, of either party to perform any of its obligations herein set forth shall not be considered a violation of this agreement.

9. Termination: User shall have the right to terminate this agreement at any time upon thirty days' written notice to Ransburg, provided User has fulfilled its obligations hereunder and returns Ransburg's equipment prepaid to

Ransburg within thirty days after such notification in as good condition as when installed, ordinary wear and tear from proper use and operation alone excepted. Ransburg shall have the right to terminate this agreement at any time after three years from the date of Ransburg's acceptance hereof upon six months' written notice to User.

In the event User shall fail to perform any of the conditions or obligations of this agreement, and such failure shall continue or recur after written notice thereof from Ransburg, Ransburg may (without prejudice to its rights to recover any amounts owing by User as herein provided or any damages for breach of this agreement) terminate this agreement and take possession of its equipment, and for that purpose permission is hereby given Ransburg or any of its agents to enter any premises wherein its equipment is located, to discover and take possession of its equipment without notice and without being liable to any suit, action, indictment, or other proceedings by User or anyone claiming under it. Any delay, concession, or indulgence on the part of Ransburg in enforcing any of its rights on any default shall not be deemed a waiver of such rights.

10. Fees: User agrees to pay to Ransburg an intial fee of .....

.....,

within sixty days after date of shipment of Ransburg's equipment or thirty days after date of installation thereof, whichever occurs earlier. In the event User has not requested shipment of Ransburg's equipment prior to the termination of this agreement or within six months of the date of Ransburg's acceptance of this agreement, whichever is earlier, one-half of the initial fee shall become due and payable forthwith, and the balance of it shall be due and payable as provided hereinabove. User further agrees

to pay Ransburg, on or before the tenth day of each calendar month during the life of this agreement, a monthly fee.

149 Monthly fees under this agreement shall start with the date of installation of Ransburg's equipment or thirty days after the date of shipment thereof from Ransburg's plant, whichever occurs earlier, and the first payments shall be made on or before the tenth day of the calendar month following. For the first and last payments of monthly fees under this agreement, the basic minimum monthly fee specified above shall be prorated according to the portion of the month for which it is payable.

In addition to the above fees, User agrees to pay, or to reimburse Ransburg if it should be obliged to pay, directly or indirectly any taxes, licenses, or fees imposed by the laws of any State, of any political subdivision, of any municipality, or of any other governmental authority by reason of the installation, possession, use, or location of any equipment furnished by Ransburg pursuant to this agreement. Such sums as may be due under this provision shall be paid separately or added to the invoice for other payments as the law may require or as Ransburg may determine.

If User does not request shipment of Ransburg's equipment prior to the expiration of six months after the date of Ransburg's acceptance of this agreement, Ransburg shall have the right prior to shipment of its equipment to change the fees and conditions of this agreement to conform to its policy as of the date of such shipment.

During the term of this agreement, the basic minimum monthly fee specified above and the sum set forth in Paragraph 3 shall from time to time be adjusted commensurately with changes, from the value for November 15, 1950, in the Consumer's Price Index for Moderate-Income Families in Large Cities, as determined by the Bureau of Labor Statistics of the U. S. Department of

Labor, on the 1935-39 base; provided, however, that only a change of at least ten percentage points in the value of said Index shall require any such adjustment.

Upon request of Ransburg, User shall supply Ransburg with a written report showing the monthly quantity of coating material used in said unit and the cost to User of said coating material. User agrees to keep permanent books of account from which the correctness of said written reports can be verified and agrees that such books of account shall be open to inspection by Ransburg or its duly authorized representatives at any time during User's regular business hours.

11. Future Inventions: User agrees that in the event User acquires, from any source, any inventions, improvements, or letters patent, domestic or foreign, pertaining to methods and or apparatus for electrostatically depositing liquid spray particles formed by airless atomization (without the use of compressed air), Ransburg shall have with respect to coating methods and apparatus employing said inventions, improvements, and the subject matter of said letters patent, a royalty-free, non-exclusive, assignable license, with right to sublicense, such license to be irrevocable except upon voluntary surrender by Ransburg. Patents subject to Ransburg's rights under this paragraph shall include only patents acquired by User during the term of this agreement, patents acquired by User within two years following termination of this agreement, and patents whenever acquired by User which cover inventions and improvements made within the term of this agreement or within two years following its termination.

12. Execution of Agreement: This agreement sets forth the entire agreement and understanding between the parties as to the subject matter of this agreement, and no statements, conditions, or representations, either oral or written, made by the parties, their employees, or agents,

including conditions or provisions appearing in any purchase order or other instrument issued by User, shall be valid or binding unless contained in a written instrument signed by both parties. Ransburg makes no warranties of any kind, express or implied, except as set forth in this agreement.

All the rights and privileges of Ransburg hereunder shall be extended to and inure to the benefit of the successors in business or assigns of Ransburg upon User being given written notice of the assignment of this agreement to such successors in business or assigns and upon the written acceptance by such successors in business or assigns of all Ranburg's obligations hereunder.

This agreement is submitted in quadruplicate for execution by User. It shall become a contract only upon its execution and acceptance by Ransburg at Ransburg's home office in Indianapolis, Indiana, and shall be effective under the laws of Indiana.

In Witness Whereof, the parties have caused this agreement to be executed by an authorized officer or person effective as of the date of acceptance by Ransburg set forth below.

..... (User)

By .....

(Title)

Executed and accepted this ..... day of ..... , 195.....

Ransburg Eeltcro-Coating Corp.
(Ransburg),

By .....

Form No. 431.

5

154 Exhibit D-29.

Adopted June, 1953.

Serial No.....

Ransburg Electro-Spray Agreement.

This agreement, entered into by and between Ransburg Electro-Coating Corp., an Indiana corporation having its principal place of business at Indianapolis, Indiana, hereinafter called "Ransburg," and

.....

hereinafter called "User," Witnesseth:

Whereas, Ransburg is the owner of, or otherwise has the right to grant licenses under, certain inventions, United States letters patent, or patent applications pertaining to and covering methods and apparatus used in electrostatically depositing liquid spray particles formed by airless atomization (without the use of compressed air), the process so used being hereinafter referred to as "said Process," has acquired much engineering data and experience pertaining to said Process, is conducting research in that field, has performed a substantial amount of engineering in adapting said Process to commercial use, has supplied User with the results of said engineering pertinent to User's production, and has designed special equipment therefor; and

Whereas, User desires to use said Process and benefit from Ransburg's engineering and requests that Ransburg furnish certain special equipment hereinbelow described;

Now, therefore, it is mutually agreed as follows:

1. License: In consideration of the payment by User of the fees herein provided, Ransburg hereby grants to User, subject to and in accordance with all of the terms and conditions of this agreement and while the same is in

effect, a nonexclusive, nonassignable license to use said Process at User's plant in ....., with one unit as shown in Ransburg's Drawing No. ....., subject to such changes therein and such further specifications as Ransburg may prescribe, for electrostatically coating .....

.....

2. Equipment: Ransburg will furnish User, for its use of said Process, high voltage, atomizing, and liquid supply apparatus and electrical controls therefor and such other equipment as Ransburg deems desirable, which will be shipped prepaid to User's aforesaid plant upon request of User. As parts of Ransburg's equipment become defective, User agrees to return prepaid all such defective parts to Ransburg promptly. Ransburg will furnish replacements, without charge, of any such defective parts which become defective as a result of ordinary wear and tear from proper use and operation, provided such parts are returned to Ransburg within thirty days after they become defective. If said defective parts become defective from improper use, operation, or negligence of User or if said defective parts are not returned to Ransburg within said thirty-day period, User agrees to pay Ransburg Ransburg's standard charges for furnishing replacements for said defective parts. The furnishing of equipment and replacements by Ransburg is subject to the availability to Ransburg of the necessary component parts of the equipment and replacements and to prior shipment commitments of Ransburg. User shall furnish all labor, materials, and equipment necessary for the use of said Process except the equipment to be furnished by Ransburg in accordance with this paragraph.

3. Supervision: Ransburg will furnish supervision necessary for placing its equipment in readiness for operation. Should Ransburg's supervisor make more than one

trip to the plant of User or be delayed there for any cause not chargeable to Ransburg, then for each day of such trip or trips or of such delay, User shall pay Ransburg the sum of Seventy-five Dollars and any necessary transportation expenses incurred thereby.

4. Conversion: Ransburg will grant, upon written request by User, a license to use said Process, otherwise than as described in Paragraph 1 unless in Ransburg's opinion the requested use involves unsafe practices or impractical conditions or is in conflict with the policies or commitments of Ransburg. Such conversion shall be made only after Ransburg has agreed thereto in writing.

5. Liability: User agrees that Ransburg shall not be liable to User for any loss, cost, expense, or damage arising from any failure of said Process or equipment to function in any particular manner or to electrostatically spray any particular article or assembly, or for any claim resulting from the use, operation, or condition of the equipment furnished by Ransburg while said equipment is in the possession or custody of User. User further agrees to reimburse Ransburg for any loss, cost, expense, or damage which may be sustained as a result of any liability to third parties for any claim resulting from the use, operation, or condition of the equipment furnished by Ransburg while said equipment is in the possession or custody of User.

6. Use of Equipment: User agrees to follow Ransburg's safety and operating recommendations and to maintain Ransburg's equipment in as good condition as when installed, ordinary wear and tear from proper use and operation alone excepted. User agrees that it shall not use or operate Ransburg's equipment with any of the parts or safety devices removed and to reimburse Ransburg for loss of or damage to Ransburg's equipment while in User's possession, or custody, ordinary wear and tear from proper use and operation alone excepted.

155 7. Title: Title to all equipment furnished by Ransburg shall at all times remain in Ransburg, and said equipment shall remain personal property regardless of how it is affixed to the realty. Ransburg shall have at all times, during business hours, the right to enter User's premises for the purpose of determining whether its equipment and said Process are being used as herein provided. User shall not have the right, without the written consent of Ransburg, to (1) lease or grant the right to use the equipment furnished by Ransburg to any person, firm, or corporation, (2) remove it from the plant to which it is delivered for installation, or (3) use it for any purpose or in any manner other than as herein provided. Upon termination of this agreement, User agrees to deliver the equipment furnished by Ransburg, freight prepaid, to Ransburg at Indianapolis, Indiana, in as good condition as when installed, ordinary wear and tear incident to its proper use and operation alone excepted.

8. Performance: The performance of the obligations of both parties hereunder is subject to strikes and lockouts, whether in the organization of either party or elsewhere, and to accidents, fires, delays in manufacture or transportation, acts of God, embargoes or any governmental action, as well as any causes for postponement, or nonperformance over which the parties have no control; and any failure, due to any of such causes, of either party to perform any of its obligations herein set forth shall not be considered a violation of this agreement.

9. Termination: User shall have the right to terminate this agreement at any time upon thirty days' written notice to Ransburg, provided User has fulfilled its obligations hereunder and returns Ransburg's equipment to Ransburg prepaid within thirty days after such notification in as good condition as when installed, ordinary wear and tear from proper use and operation alone excepted. Ransburg

shall have the right to terminate this agreement at any time after three years from the date of Ransburg's acceptance hereof upon six months' written notice to User.

In the event User shall fail to perform any of the conditions or obligations of this agreement, and such failure shall continue or recur after written notice thereof from Ransburg, Ransburg may (without prejudice to its rights to recover any amounts owing by User as herein provided or any damages for breach of this agreement) terminate this agreement and take possession of its equipment forthwith, and for that purpose permission is hereby given Ransburg or any of its agents to enter any premises wherein its equipment is located, to discover and take possession of its equipment without notice and without being liable to any suit, action, indictment, or other proceedings by User or anyone claiming under it. Any delay, concession, or indulgence on the part of Ransburg in enforcing any of its rights on any default shall not be deemed a waiver of such rights.

10. Fees: User agrees to pay to Ransburg an initial fee of .....

within sixty days after date of shipment of Ransburg's equipment or thirty days after date of installation thereof, whichever occurs earlier. In the event User has not requested shipment of Ransburg's equipment prior to the termination of this agreement or within six months of the date of Ransburg's acceptance of this agreement, whichever is earlier, one-half of the initial fee shall become due and payable forthwith, and the balance of it shall be due and payable as provided hereinabove. User further agrees to pay Ransburg, on or before the tenth day of each calendar month during the life of this agreement, a monthly fee

156 Monthly fees under this agreement shall start with the date of installation of Ransburg's equipment or

thirty days after the date of shipment thereof by Ransburg, whichever occurs earlier, and the first payment shall be made on or before the tenth day of the calendar month following. For the first and last payments of monthly fees under this agreement, the basic minimum monthly fee specified above shall be prorated according to the portion of the month for which it is payable.

In addition to the above fees, User agrees to pay, or to reimburse Ransburg if it should be obliged to pay, directly or indirectly, any taxes, licenses, or fees imposed by the laws of any State, of any political subdivision, of any municipality, or of any other governmental authority by reason of the installation, possession, use, or location of any equipment furnished by Ransburg pursuant to this agreement. Such sums as may be due under this provision shall be paid separately or added to the invoice for other payments as the law may require or as Ransburg may determine.

If User does not request shipment of Ransburg's equipment prior to the expiration of six months after the date of Ransburg's acceptance of this agreement, Ransburg shall have the right, prior to shipment of its equipment, to change the fees and conditions of this agreement to conform to its policy as of the date of such shipment.

During the term of this agreement, the basic minimum monthly fee specified above and the sum set forth in Paragraph 3 shall from time to time be adjusted commensurately with changes, from the value for November 15, 1950, in the Consumer Price Index, Large Cities Combined, as determined by the Bureau of Labor Statistics of the U. S. Department of Labor, on the 1947-49 base; provided, however, that only a change of at least ten percentage points in the value of said Index shall require any such adjustment.

Upon request of Ransburg, User shall supply Ransburg

with a written report showing the monthly quantity of coating material used in said unit and the cost to User of said coating material. User agrees to keep permanent books of account from which the correctness of said written reports can be verified and agrees that such books of account shall be open to inspection by Ransburg or its duly authorized representatives at any time during User's regular business hours.

11. Future Inventions: User agrees that in the event User acquires, from any source, any inventions, improvements, or letters patent, domestic or foreign, pertaining to methods and/or apparatus for electrostatically depositing liquid spray particles formed by airless atomization (without the use of compressed air), Ransburg shall have with respect to coating methods and apparatus employing said inventions, improvements, and the subject matter of said letters patent, a royalty-free, nonexclusive, assignable license, with right to sublicense, such license to be irrevocable except upon voluntary surrender by Ransburg. Patents subject to Ransburg's rights under this paragraph shall include only patents acquired by User during the term of this agreement, patents acquired by User within two years following termination of this agreement, and patents whenever acquired by User which cover inventions and improvements made within the term of this agreement or within two years following its termination.

12. Execution of Agreement: This agreement sets forth the entire agreement and understanding between the parties as to the subject matter of this agreement, and no statements, conditions, or representations, either oral or written, made by the parties, their employees, or agents, including conditions or provisions appearing in any purchase order or other instrument issued by User, shall be valid or binding unless contained in a written instrument signed by both parties. Ransburg makes no warranties of

any kind, express or implied, except as set forth in this agreement.

All the rights and privileges of Ransburg hereunder shall be extended to and inure, to the benefit of the successors in business or assigns of Ransburg upon User being given written notice of the assignment of this agreement to such successors in business or assigns and upon the written acceptance by such successors in business or assigns of all Ransburg's obligations hereunder.

This agreement is submitted in quadruplicate for execution by User. It shall become a contract only upon its execution and acceptance by Ransburg at Ransburg's home office in Indianapolis, Indiana, and shall be effective under the laws of the State of Indiana.

In Witness Whereof, the parties have caused this agreement to be executed by an authorized officer or person effective as of the date of acceptance by Ransburg set forth below.

.....(User)

By .....

(Title)

Executed and accepted this.....day of .....,195.....

Ransburg Electro-Coating Corp. (Ransburg)

By.....

(Title)

168 Exhibit D-35.

Adopted July, 1955.

Serial No. .....

Ransburg Electro-Spray Agreement.

This agreement, entered into by and between Ransburg Electro-Coating Corp., an Indiana corporation, having its principal place of business at Indianapolis, Indiana, hereinafter called "Ransburg," and .....

.....

.....,

hereinafter called "User," Witnesseth:

Whereas, Ransburg is the owner of, or otherwise has the right to grant licenses under, certain United States letters patent and inventions pertaining to and covering methods and apparatus used in electrostatically depositing liquid spray particles formed by airless atomization (without the use of compressed air), the process so used being hereinafter referred to as "said Process," has acquired much engineering data and experience pertaining to said Process, is conducting research in that field, has performed a substantial amount of engineering in adapting said Process to commercial use, has supplied User with results of said engineering pertinent to User's production, and has designed special equipment therefor; and

Whereas, User desires to use said Process and benefit from Ransburg's engineering and requests that Ransburg furnish certain special equipment hereinbelow described;

Now, therefore, it is mutually agreed as follows:

1. License: Ransburg hereby grants to User, subject to and in accordance with all of the terms and conditions of this agreement and while the same is in effect, a non-

exclusive, nonassignable license to use said Process at User's plant in ....., with ..... as shown in Ransburg's Drawing No. ....., subject to such changes therein and such further specifications as Ransburg may prescribe, for electrostatically coating .....

.....

2. Equipment and Service: Ransburg will furnish User, for its use of said Process, high voltage, atomizing, and liquid supply apparatus and electrical controls therefor and such other equipment as Ransburg deems desirable, which will be shipped prepaid to User's aforesaid plant upon request of User. As parts of Ransburg's equipment become defective, User agrees to return prepaid to Ransburg promptly all such defective parts. Ransburg will furnish replacements, without charge, of any such defective parts which become defective as a result of ordinary wear and tear from proper use and operation, provided such parts are returned to Ransburg within thirty days after they become defective. If defective parts become defective from improper use, operation, or negligence of User or if defective parts are not returned to Ransburg within said thirty-day period, User agrees to pay Ransburg Ransburg's standard charges for furnishing replacements for defective parts.

Ransburg will furnish supervision necessary for placing its equipment in readiness for operation. Should Ransburg's supervisor make more than one trip to the plant of User or be delayed there for any cause not chargeable to Ransburg, then for each day of such trip or trips or of such delay, User shall pay Ransburg the sum of Seventy-five Dollars and any necessary transportation expenses incurred thereby.

User shall furnish all labor, materials, and equipment necessary for the use of said Process except the equipment

and supervision to be furnished by Ransburg in accordance with this paragraph.

The furnishing of equipment, replacements, and supervision by Ransburg is subject to the availability to Ransburg of the necessary component parts of the equipment and replacements, to prior shipment commitments of Ransburg, to strikes and lockouts, whether in the organization of Ransburg or elsewhere, and to accidents, fires, delays in manufacture or transportation, acts of God, court injunctions, or any governmental action, as well as any causes for postponement or nonperformance over which Ransburg has no control; and any failure, due to any of such causes, of Ransburg to perform any of its obligations herein set forth shall not be considered a breach of this agreement.

169 3. Title and Use of Equipment: Title to all equipment furnished by Ransburg including replacements shall at all times remain in Ransburg, and said equipment shall remain personal property regardless of how it is affixed to the realty. Ransburg shall have at all times, during business hours, the right to enter User's premises for the purpose of determining whether its equipment and said Process are being used as herein provided. User shall not have the right, without the written consent of Ransburg, to (1) lease or grant the right to use the equipment furnished by Ransburg to any person, firm, or corporation, (2) remove it from the plant to which it is delivered for installation, or (3) use it for any purpose or in any manner other than as herein provided.

User agrees that it shall not use or operate Ransburg's equipment with any of the parts or safety devices removed, that it shall follow Ransburg's safety and operating recommendations, and that it shall maintain Ransburg's equipment in as good condition as when installed, ordinary wear and tear from proper use and operation alone excepted.

4. Liability: User agrees that Ransburg shall not be liable to User for any loss, cost, expense, or damage resulting from any failure of said Process or equipment to function in any particular manner or to electrostatically coat any particular article or assembly or resulting from the installing, servicing, adjusting, presence, use, operation or condition of Ransburg's equipment. User also agrees to reimburse Ransburg for any loss, cost, expense, or damage Ransburg may sustain because of any claims by third parties resulting from the installing, servicing, adjusting, presence, use, operation or condition of Ransburg's equipment. User shall be liable to Ransburg for any loss of, or damage to, Ransburg's equipment occurring at any time that such equipment is in the possession of User or any of its agents, ordinary wear and tear from proper use and operation alone excepted.

5. Termination: User shall have the right to terminate this agreement at any time upon thirty days' written notice to Ransburg, provided User has fulfilled its obligations hereunder including the return of Ransburg's equipment. Ransburg shall have the right to terminate this agreement at any time after three years from the date of Ransburg's acceptance hereof upon six months' written notice to User.

In the event User shall fail to perform any of the conditions or obligations of this agreement, and such failure shall continue or recur after written notice thereof from Ransburg, Ransburg may (without prejudice to its rights to recover any amounts owing by User as herein provided or any damages for breach of this agreement) terminate this agreement and take possession of its equipment forthwith, and for that purpose permission is hereby given Ransburg or any of its agents to enter any premises wherein its equipment is located to discover and take possession of its equipment without notice and without being liable to any suit, action, indictment, or other proceedings by User or anyone claiming under it. Any delay, concession,

or indulgence on the part of Ransburg in enforcing any of its rights on any default shall not be deemed a waiver of such rights.

After notice of termination of this agreement, User agrees to deliver the equipment furnished by Ransburg, to Ransburg at Indianapolis, Indiana, freight prepaid, in as good condition as when installed, ordinary wear and tear incident to its proper use and operation alone excepted.

6. Fees: User agrees to pay to Ransburg an initial fee of .....,

within sixty days after date of shipment of Ransburg's equipment or thirty days after date of installation thereof, whichever occurs earlier. In the event User has not requested shipment of Ransburg's equipment prior to the termination of this agreement or within six months of the date of Ransburg's acceptance of this agreement, whichever is earlier, one-half of the initial fee shall become due and payable forthwith, and the balance of it shall be due and payable as provided hereinabove. For each calendar month during which this agreement is in effect, User also agrees to pay to Ransburg a monthly fee

170 The first period for which a monthly fee is payable shall commence with the date of installation of Ransburg's equipment, or thirty days after the date of shipment thereof by Ransburg, whichever occurs earlier. With respect to any fractional calendar month for which a monthly fee is payable, the basic minimum monthly fee shall be prorated according to the portion of the month for which it is payable. Within ten days after the end of each calendar month for which a monthly fee is payable, User will furnish to Ransburg upon forms furnished by Ransburg, or, in the absence thereof, upon any reasonably adequate form, a written report setting forth in reasonable detail the information upon which the aforesaid monthly fee may be computed and shall pay to Ransburg

at its office at Indianapolis, Indiana, the monthly fee payable for said month. User agrees to keep permanent books of account from which the correctness of said written reports can be verified and agrees that such books of account shall be open to inspection by Ransburg or its duly authorized representatives at any time during User's regular business hours.

In addition to the above fees, User agrees to pay, or to reimburse Ransburg if it should be obliged to pay, directly or indirectly, any taxes, licenses, or fees imposed by the laws of any State, of any political subdivision, of any municipality, or of any other governmental authority by reason of the installation, possession, use, or location of any equipment furnished by Ransburg or by reason of the furnishing of any services by Ransburg pursuant to this agreement. Such sums as may be due under this provision shall be paid separately or added to the invoice for other payments as the law may require or as Ransburg may determine.

If User does not request shipment of Ransburg's equipment prior to the expiration of six months after the date of Ransburg's acceptance of this agreement, Ransburg shall have the right, prior to shipment of its equipment, to change the fees and conditions of this agreement to conform to its policy as of the date of such shipment.

During the term of this agreement, the basic minimum monthly fee specified above and the sum set forth in Paragraph 2 may from time to time be adjusted commensurately with changes, from the value for November, 1950, in the Consumer Price Index, Large Cities Combined, All Items, as determined by the Bureau of Labor Statistics of the U. S. Department of Labor, on the 1947-49 base, or any successor thereto; provided, however, no such adjustment shall be made unless a change of at least ten percentage points has occurred in said Index prior to each such adjustment.

7. Execution of Agreement: This agreement sets forth the entire agreement and understanding between the parties as to the subject matter of this agreement, and no statements, conditions, or representations, either oral or written, made by the parties, their employees, or agents, including conditions or provisions appearing in any purchase order or other instrument issued by User, shall be valid or binding unless contained in a written instrument signed by both parties. Ransburg makes no warranties of any kind, express or implied, except as set forth in this agreement.

All the rights and privileges of Ransburg hereunder shall be extended to and inure to the benefit of the successors in business or assigns of Ransburg upon User being given written notice of the assignment of this agreement to such successors in business or assigns and upon the written acceptance by such successors in business or assigns of all Ransburg's obligations hereunder.

This agreement consisting of three pages is submitted in quadruplicate for execution by User. It shall become a contract only upon its execution and acceptance by Ransburg at Ransburg's home office in Indianapolis, Indiana, and shall be effective under the laws of the State of Indiana.

In Witness Whereof, the parties have caused this agreement to be executed by an authorized officer or person effective as of the date of acceptance by Ransburg set forth below.

Executed and accepted by Ransburg this ..... day of ....., 195....

Ransburg Electro-Coating Corp. (Ransburg)

By.....

(Title)

..... (User)

By.....

(Title)

Exhibit E.

224

I Licensee	II Date	III Without Air	IV Active Without Air on 10-11-56	V With Air	VI Form Used
	2- 6-56			x	D-20
AMF Cycle Co. Little Rock, Ark.	2- 6-56 2-23-53	x		x	D-20 D-26
The A. P. Parts Corp. Toledo, Ohio	2- 1-55 2-25-48			x x	D-15 D-1
Acme Visible Records, Inc. Chicago, Ill.	2- 7-50 12-11-52	x	x	x	D-5 D-26
Acoustics Mfg. Corp. Detroit, Mich.	6-30-55	x	x		D-32
Admiral Corp. Chicago, Ill.	6- 7-56			x	D-20
Ainsworth Mfg. Co. Detroit, Mich.	9- 5-48			x	D-1
Air-Maze Corp. Cleveland, Ohio	1-11-52			x	D-7
Airway Finishing Corp. Chicago, Ill.	10-31-50 4-16-51	x		x	D-5 D-23
Algonquin Corp. Detroit, Mich.	11-21-52 11-21-52			x x	D-9 D-9
All-Lite Mfg. Co. Chicago, Ill.	11- 2-48			x	D-1
All-Steel Equip. Inc. Aurora, Ill.	8-10-53 4-21-52 2-11-55 5-16-55 5-15-56 8-31-56	x x x x x x	 x x x x x		D-29 D-25 D-32 D-32 D-35 D-36

225

I Licensee	II Date	III Without Air	IV Active Without Air on 10-11-56	V With Air	VI Form Used
Allen Industries, Inc. Leland and G. T. R. R. Detroit 7, Michigan	10- 7-52			x	D-10
Alon Mfg. Co. Philadelphia, Pa.	7-22-54	x	x		D-29
Alside, Inc. Akron, Ohio	4-16-48			x	D-1
Altex Corp. Milwaukee, Wis.	7- 9-52	x	x		D-26
Aluminum Goods Mfg. Co. Manitowoc, Wis.	7- 3-51	x			D-24

I	II	III	IV	V	VI
Licensee	Date	Without Air	Active Without Air on 10-11-56	With Air	Form Used
American & Southern Corp. Nashville, Tenn.	12-15-54	x			D-31
American Meter Co., Inc.	3-29-56	x	x		D-35
Philadelphia, Pa.	*2-21-56	x	x		D-35
American Motors Corp. Kenosha, Wis.	8- 4-55	x	x		D-35
American Radiator &	7-23-48			x	D-1
Standard Sanitary Corp.	3-21-56	x	x		D-35
Buffalo, New York	4-16-56	x	x		D-35
American Seating Co.	5- 5-48			x	D-1
Grand Rapids, Mich.	12-18-52	x	x		D-26
	4- 6-56	x	x		D-35
	4- 6-56	x	x		D-35
Amer. Welding & Mfg. Co. Warren, Ohio	5- 7-48			x	D-1
226					
Amerock Corp.	8-30-54	x	x		D-31
Rockford, Ill.	4- 2-56	x	x		D-35
O. Ames Co. Parkersburg, W. Va.	1-31-55	x	x		D-32
Anderson-Bolling Mfg. Co.	6-15-55	x	x		D-32
Grand Haven, Mich.	*4- 7-54			x	D-12
	11- 3-53			x	D-12
Andwall Mfg. Co.	6-19-53			x	D-12
Ocònomowoc, Wis.	6-19-53			x	D-12
Angleton Finishing Co. Newark, N. J.	12-30-48			x	D-1
Applied Arts Mfg. Corp. Grand Rapids, Mich.	1-26-56	x	x		D-35
Armstrong Rubber Mfg. Co. Des Moines, Iowa	8-31-50			x	D-5
The Arnold Engineering Co. Los Angeles, Calif.	7- 7-52	x	x		D-26
Arnold, Schwinn & Co.	12-19-49			x	D-1
Chicago, Ill.	9-13-51			x	D-7
Arnot-Jamestown Div.	7- 2-56	x	x		D-35
Aetna Steel Prod. Corp. Jamestown, N. Y.	7-11-56	x	x		D-35
Arrow Safety Device Co. Mt. Holly, N. J.	8-28-50			x	D-3
227					
Arvin Industries, Inc.	1-19-49			x	D-4
Columbus, Ind.	9-20-51	x			D-24
	12-18-51	x			D-25
	8-21-52			x	D-9
	10-11-51	x	x		D-25

I Licensee	II Date	III Without Air	IV Active Without Air on 10-11-56	V With Air	VI Form Used
The Ashtabula Mfg. Co. Ashtabula, Ohio	1-31-56 7-26-54	x x	x		D-35 D-31
Associated Pacific Venice, Calif.	1-13-56	x	x		D-35
The Atlanta Stove Works, Inc. Atlanta, Ga.	12- 1-54	x	x		D-31
Atlas Mfg. Co. St. Paul, Minn.	5- 8-56	x	x		D-35
Atlas Novelty Co. Chicago, Ill.	10-1-48			x	D-1
Atlas Plating Co. Div. Assoc. Baked Enameling Co. Los Angeles, Calif.	5-10-56	x	x		D-35
Auer Register Co. Cleveland, Ohio	1- 9-50			x	D-3
D. L. Auld Co. Columbus, Ohio	6-20-51			x	D-7
Auto Specialties Mfg. Co., Inc. St. Joseph, Michigan	10-30-53 10-30-53	x x	x x		D-29 D-29
228					
Avco Mfg. Corp. Crosley-Bendix Div. Richmond, Ind.	3-30-49 3-30-49			x x	D-4 D-4
Avco Mfg. Corp. Crosley-Bendix Div. Nashville, Tenn.	2- 2-54	x	x		D-29
B. M. C. Mfg. Corp. Binghamton, N. Y.	1-17-52			x	D-7
Barler Metal Prods. Inc. Goshen, Ind.	10-19-49 3-22-51 10-28-54	x x	x	x	D-4 D-23 D-31
Bastian Blessing Co. Chicago, Ill.	4-17-49			x	D-1
Baxter Steel Equip. Co. Indianapolis, Ind.	9-11-56	x	x		D-36
Bell & Howell Chicago, Ill.	1-31-49 10-23-51 10-23-51 6- 8-56	x x x	x x	x	D-1 D-25 D-25 D-35
Bendix Aviation Corp. Eclipse Machine Div. Elmira, New York	5-22-51			x	D-7
Beneke Corp. Columbus, Miss.	12- 1-55 12- 1-55	x x	x x		D-35 D-35

I Licensee	II Date	III Without Air	IV Active Without Air on 10-11-56	V With Air	VI Form Used
Bennett Industries Peotone, Ill.	6-23-52	x	x		D-26
Berger Mfg. Div. Republic Steel Corp. Canton, Ohio	2-17-48			x	D-1
229					
Berns Mfg. Corp. Chicago, Ill.	11- 8-50			x	D-5
Otto Bernz Co. Rochester, N. Y.	9- 1-53	x	x		D-29
Bethlehem Steel Co., Inc. Sparrows Point, Md.	5- 7-56	x			D-35
Binkley Mfg. Co. Warrenton, Mo.	2-12-51			x	D-3
Birtman Electric Co.	7-12-55	x	x		D-35
Chicago, Ill.	1-31-49			x	D-1
Bishop & Babcock Mfg. Co.	4- 3-51			x	D-3
Cleveland, Ohio	1-11-52			x	D-7
Bissell Carpet Sweeper Co. Grand Rapids, Mich.	5- 7-56	x	x		D-35
Blake Mfg. Co. Clinton, Mass.	10-15-48			x	D-1
Wm. R. Bootz Mfg. Co. Evansville, Ind.	7-31-53	x			D-28
The Borg-Erickson Co. Chicago, Ill.	4- 9-48			x	D-1
Borg-Warner Corp. Ingersoll Steel Prod. Chicago, Ill.	11- 6-51			x	D-7
Bowen Prod. Corp. Auburn, New York	12-10-51	x			D-25
230					
Briggs Mfg. Co.	2-24-48			x	D-1
Detroit, Mich.	9-16-53			x	D-12
Briggs & Stratton	7- 1-53			x	D-10
Milwaukee, Wis.	9-14-49			x	D-4
	2-17-55	x	x		D-32
Bristol Sheet Metal Co. Wallingford, Conn.	2- 2-53	x			D-26
The Brunhoff Mfg. Co. Cincinnati, Ohio	4-18-56			x	D-20
The Brunswick Balke Collender Co. Muskegon, Michigan	7-22-54			x	D-12

I	II	III	IV	V	VI
Licensee	Date	Without Air	Active Without Air on 10-11-56	With Air	Form Used
Bryant Heater Div. Affiliated Gas Equip. Inc. Tyler, Tex.	7- 6-53			x	D-10
Buch Mfg. Co. Elizabethtown, Pa.	6-30-55			x	D-16
Bunting Co., Inc.	9- 7-48			x	D-1
Philadelphia, Pa.	7-18-49			x	D-4
The Busch & Thiem Co.	9-13-48			x	D-1
Sandusky, Ohio	1-11-49			x	D-1
Butler Mfg. Co.	1-11-49			x	D-1
Kansas City, Mo.	8-20-51	x			D-23
C & H Air Cond. Fan Co. Atlanta, Ga.	1-12-48			x	D-1
Calif. Parkerizing Co. Oakland, Calif.	10- 2-48			x	D-1
231					
Cameo Doll Prod. Div. Noma Electric Corp. Port Allegheny, Pa.	6-22-48			x	D-1
Carey-McFall Co. Montoursville, Pa.	6-29-51			x	D-7
Carolina Metal Prod. Inc. Charlotte, N. C.	7- 6-55			x	D-16
Carter Craft, Inc. Plano, Texas	11- 1-48			x	D-1
Carter Machine & Tool Co. Dubuque, Iowa	1-27-48			x	D-1
J. I. Case Co. Bettendorf, Iowa	2-11-48			x	D-1
Ceco Steel Prod. Corp.	11-30-51	x	x		D-25
Pittsburgh, Pa.	5-25-54	x	x		D-29
Century Plastic Prod. Inc. Cleveland, Ohio	5-17-55	x	x		D-32
	5- 5-48			x	D-1
Cessna Aircraft Co.	5- 5-48			x	D-1
Wichita, Kansas	5- 5-48			x	D-1
	5- 5-48			x	D-1
Chelsea Products, Inc. Plainfield, N. J.	12-14-53	x	x		D-29
Chicago Rawhide Mfg. Co. Elgin, Illinois	11- 4-55	x	x		D-35
ChromCraft Corp. St. Louis, Mo.	5-25-51	x	x	x	D-24

232

I	II	III	IV	V	VI
Licensee	Date	Without Air	Active Without Air on 10-11-56	With Air	Form Used
Chrysler Corp.	9- 7-54			x	D-12
Automotive Body Div.	9- 7-54			x	D-12
Detroit, Mich.	9- 7-54			x	D-12
	9-27-54			x	D-12
Clemson Bros., Inc. Middletown, N. Y.	1-14-48			x	D-1
Clinton Machine Co. Maquoketa, Iowa	4-20-51			x	D-3
Columbia Mills, Inc. Saginaw, Mich.	11-25-48			x	D-1
Columbia Enameling & Stamping Co. Terre Haute, Ind.	11- 6-52			x	D-9
Combustion Engineering Superheater, Inc. Chattanooga, Tenn.	3-19-48			x	D-1
Conco Eng. Works Mendota, Ill.	10-31-50			x	D-5
Continental Steel Corp. Kokomo, Ind.	3-10-48			x	D-1
Corona Corp. Jersey City, N. J.	3-25-53	x	x		D-26
Croname, Inc. Chicago, Ill.	2-24-50			x	D-5
Cronstroms Mfg. Co., Inc. Minneapolis, Minn.	9-28-55			x	D-16
Crown Can Company	2- 9-48			x	D-1
Philadelphia, Pa.	4-30-54	x	x		D-29
	3-14-55	x	x		D-32

233

James Cunningham, Son & Co., Inc. Rochester, New York	10- 6-53	x			D-29
Curtis Lighting Inc. Chicago, Illinois	10-17-55	x	x		D-35
Daisy Mfg. Co. Plymouth, Mich.	2- 9-53	x	x		D-26
Day & Night Div. Carrier Corp. Monrovia, Calif.	9- 1-48			x	D-1
	7-11-50			x	D-5
	7-11-50			x	D-5
Daystrom Furniture	7-11-50			x	D-5
Olean, New York	5-15-56	x	x		D-35
Dazey Corp. St. Louis, Mo.	7- 6-54	x	x		D-20

234

I	II	III	IV	V	VI
Licensee	Date	Without Air	Active Without Air on 10-11-56	With Air	Form Used
Defiance Automatic Screw Co. Div. of The Zeller Corp. Defiance, Ohio	5-29-52			x	D-9
Del-Val Div. J. W. Rex Co. Lansdale, Pa.	9-28-54			x	D-12
Delta Electric Co. Marion, Indiana	6-12-51	x	x		D-24
Detecto Scales, Inc.	3-26-48			x	D-1
Brooklyn, New York	3-26-48			x	D-1
Detroit Controls Corp.	7-12-48			x	D-1
Detroit, Michigan	6-14-54	x	x		D-29
Detroit Harvester Co.	5-25-55			x	D-16
Moto-Mower Div.	1-31-49			x	D-1
Richmond, Ind.					
Detroit Hdwe. Mfg. Co. Detroit, Mich.	2- 2-53	x	x		D-26
Dexter Industries, Inc. Sub. of Nat'l Brass Co. Grand Rapids, Mich.	2- 9-55	x	x		D-32
R. E. Dietz Mfg. Co.	11- 1-48			x	D-1
Syracuse, N. Y.	1-22-54	x	x		D-29
Diffler Color Div. Pittsburgh Plate Glass Detroit, Mich.	10- 4-50			x	Typed
Do-All Finishing Co.	12-26-51	x			D-25
Chicago, Ill.	4- 4-52			x	D-7
Doehler-Jarvis Div. National Lead Co. Pottstown, Pa.	2-17-55	x	x		D-32
Dominion Elec. Corp.	4-19-46			x	D-1
Mansfield, Ohio	8-25-53	x	x		D-29
Donaldson Co., Inc. St. Paul, Minn.	5-19-48			x	D-1
Dryden Rubber Div. Sheller Mfg. Co. Chicago, Illinois	11-12-53	x	x		D-29
C. A. Dunham Co.	4-13-51	x			D-23
Chicago, Ill.	1-21-55	x			D-32
E. I. DuPont de Nemours	1-18-49			x	D-1
Wilmington, Delaware	11- 4-49			x	D-4
	8-27-52	x	x		D-26
	11- 6-52	x			D-26
	9-23-55	x	x		D-35
	4-26-56	x	x		Typed
	9-23-55	x	x		D-35

235

I	II	III	IV	V	VI
Licensee	Date	Without Air	Active Without Air on 10-11-56	With Air	Form Used
Durham Mfg. Corp. Chicago, Ill.	3-27-56	x	x		D-35
Eagle Mfg. Co. Wellsburg, W. Va.	10-25-49			x	D-4
Eastern Venetian Blind	6-14-49	x			Typed
Baltimore, Md.	10-26-51	x	x		D-25
Eaton Mfg. Co.	4-14-48			x	D-1
Cleveland, Ohio	11- 3-48			x	D-1
	3-13-51			x	D-3
	11- 4-53	x	x		D-29
	11- 4-53	x	x		D-29
	4-19-54	x	x		D-29
	6- 4-54	x	x		D-29
Eaton Metal Prod. Corp. Omaha, Neb.	10-10-51	x			D-25
Eaton Metal Prod. Co. Denver, Colo.	10-23-51	x			D-25
Eldon Mfg. Co. Los Angeles, Calif.	9- 1-48			x	D-1
The Elec. Auto Lite Co.	11-15-48			x	D-1
Cincinnati, Ohio	9-27-50			x	D-5
	2-22-51			x	D-3
	2-22-51			x	D-3
	3- 5-51			x	D-3
	3- 5-51			x	D-3
	4-11-51			x	D-3
	12-22-53	x	x		D-27
	6- 4-56			x	D-20
Electrocraft, Inc. Mukwonago, Wis.	10-27-53			x	D-12
Electrolux Corp. Old Greenwich, Conn.	1-31-49			x	D-1
Embury Mfg. Co. Warsaw, N. Y.	11-16-48			x	D-1

236

Emerson Electric Co. St. Louis, Mo.	4-14-48			x	D-1
Enameled Steel & Sign	3-21-4[illegible]	x			Typed
Chicago, Ill.	1- 3-50			x	D-4
	6- 5-50			x	D-5
	2-19-51	x			D-23
	12- 1-52	x			Typed
	3-22-56	x	x		Typed
Enamelers & Japanners Chicago, Ill.	2-11-48			x	D-1
Endemano Plating Co., Inc. Huntington Park, Calif.	5-28-48			x	D-1

I	II	III	IV	V	VI
Licensee	Date	Without Air	Active Without Air on 10-11-56	With Air	Form Used
The Erle Art Metal Co. Erie, Pa.	11-14-55	x	x		D-35
Evans Products Co.	3- 5-54			x	D-12
Plymouth, Mich.	7-13-54	x	x		D-29
Excelsior Mfg. Co. Michigan City, Ind.	12- 4-52			x	D-9
F. & N. Lawnmower Co. Richmond, Ind.	8-16-48			x	D-1
	9-18-50			x	D-5
R. D. Fageol Co.	9-18-50			x	D-5
Detroit, Mich.	9-18-50			x	D-5
Federal Fabricators & Finishers	6-12-56	x	x		D-35
Chicago, Ill.	11- 5-51			x	D-7
Flat Metal Mfg. Co., Inc.	1-28-49			x	D-1
Long Island, N. Y.	11-16-48			x	D-1
237					
Fluorescent Fixtures of Calif. San Francisco, Calif.	10-21-54	x	x		D-31
Firecraft Corp. Chicago, Ill.	10-26-49			x	D-4
Forgee Metal Prod., Inc. Paulsboro, N. J.	12- 9-53			x	D-12
Free Sewing Mach. Co. Rockford, Ill.	3-21-50			x	D-5
Friden Calculating Mach. Co., Inc.	6-17-49			x	D-1
	6-17-48			x	D-1
San Leandro, Calif.	6- 7-56	x	x		D-35
The Frito Co. Dallas, Tex.	3-16-53			x	D-9
Frontier Mfg. Co. Dallas, Tex.	8-23-48			x	D-1
Fuller Brush Co. Hartford, Conn.	5-28-48			x	D-1
The Fyr-Fyter Co. Dayton, Ohio	12-11-48			x	D-1
Gabriel Co.	9- 7-46			x	D-1
Cleveland, Ohio	1-16-49			x	D-1
	7- 1-53	x			D-27
Gale Products Galesburg, Ill.	4- 7-52			x	D-7
Garland Mfg. Co. Detroit, Mich.	8-20-56			x	D-21

238

I	II	III	IV	V	VI
Licensee	Date	Without Air	Active Without Air on 10-11-56	With Air	Form Used
General Dry Batteries, Inc. Cleveland, Ohio	11-23-48			x	D-1
	4-13-54	x	x		D-29
General Elec. Co.	10-29-52	x			D-26
Schenectady, N. Y.	11-25-52	x	x		D-26
	6-22-53	x	x		D-27
	11-17-53	x	x		D-29
	4-13-54	x	x		D-29
	7-27-54	x	x		D-29
	11-29-54	x	x		D-31
	12- 1-54	x	x		D-31
	4- 4-55	x	x		D-32
	7-26-55	x	x		D-35
	8- 2-55	x	x		Typed
	2- 9-56	x	x		D-35
	3-12-56	x	x		Typed
	2- 9-56	x	x		D-35
	2-15-56	x	x		D-35
	2-28-56			x	D-20
	5- 7-56	x	x		D-35
	2-15-56	x	x		D-35
General Water Heater Co. Burbank, Calif.	6-29-54	x	x		D-29
Gerity-Michigan Corp. Adrian, Mich.	3-28-52			x	D-7
Geuder, Paaschke & Frey Lebanon, Ind.	4- 2-51	x	x		D-23
Gibson Refrigerator Co.	8- 2-49			x	D-4
Greenville, Mich.	8- 2-49			x	D-4
Gibson Mfg. Co.	9-25-56	x	x		D-36
Atlanta, Ga.	6-21-56	x			D-35
Glenvale Products Div. Malvern, Ark.	10-29-51			x	D-7
Globe Lighting Prod. Inc. Los Angeles, Calif.	2- 9-55	x	x		D-31

239

Goerlich's, Inc. Toledo, Ohio	8-11-49			x	D-4
Goodyear Aircraft Corp. Akron, Ohio	3-30-50			x	D-5
The Graber Co. Middleton, Wis.	10-22-51	x	x		D-25
Grammes, L. F. & Sons, Inc.	6-15-48			x	D-1
Allentown, Pa.	10-30-52			x	D-9
Grand Rapids Brass Co. Grand Rapids, Mich.	1-13-50			x	D-5
Grand Rapids Metalcraft Div. F. L. Jacobs Co.	4-16-56	x	x		D-30

I	II	III	IV	V	VI
Licensee	Date	Without Air	Active Without Air on 10-11-56	With Air	Form Used
Grand Rapids, Mich.					
Grand Sheet Metal Prods.	5-20-49			x	D-4
Chicago, Ill.	10-18-50			x	D-5
	11- 6-52			x	D-9
	11-12-54	x	x		D-31
Graphire Corp.	1-29-51			x	D-3
New York, N. Y.					
Griffin Wheel Co.	1-13-56			x	D-20
Chicago, Ill.					
Grigoleit Co.	1-24-51			x	D-3
Decatur, Ill.					
C. M. Hall Lamp Co.	3-12-52			x	D-7
Detroit, Mich.					
Hamill Mfg. Co.	9- 6-56	x	x		D-36
Washington, Mich.					
240					
Hamilton Beach Co.	7- 1-54	x	x		D-27
Div. of Scoville Mfg. Co.					
Racine, Wis.					
	7-24-52	x	x		D-26
Hamilton Mfg. Corp.	11-11-48			x	D-1
Columbus, Ind.	4- 5-50			x	D-5
	7-24-52	x	x		D-26
	10- 5-54	x	x		D-31
	4- 5-50			x	D-5
Hamilton Metal Prod. Co.	4- 5-48			x	D-1
Hamilton, Ohio					
Hampden Specialty Prod. Inc.	9-12-55	x	x		D-35
Easthampton, Mass.	8-14-56	x	x		D-36
Hardy Mfg. Corp.	2-21-56	x	x		D-35
Union City, Ind.					
Harvey Machine Co., Inc.	7-24-51			x	D-7
Torrance, Calif.	2-15-52			x	D-7
Herman Hassinger, Inc.	4- 3-50			x	D-5
Philadelphia, Pa.	1- 8-52	x	x		D-25
Health-Mor, Inc.	5-13-52			x	D-7
Cleveland, Ohio					
M. M. Hedges Mfg. Co., Inc.	11-16-54	x	x		D-31
Chattanooga, Tennessee					
Heineke & Co.	8- 6-49			x	D-4
Springfield, Ill.					
Heintz Mfg. Co.	12-18-53	x	x		D-29
Philadelphia, Pa.	6- 1-54			x	D-12
	4- 5-55	x	x		D-32
Wm. Heller Co., Inc.	2- 6-56	x	x		D-35
Altoona, Pa.					

241

I Licensee.	II Date	III Without Air	IV Active Without Air on 10-11-56	V With Air	VI Form Used
Hemp & Co. Macomb, Ill.	2- 6-51 11- 2-51 11- 1-55 11- 1-55			x x x x	D-3 D-7 D-20 D-20
Henry Furnace Co. Medina, Ohio	9-25-53			x	D-13
Hercules Bldg. Corp. Chicago, Ill.	11- 1-50			x	D-5
Hillgren Mfg. Co. Huntington Park, Calif.	1-19-48 7-13-54			x x	D-1 D-11
Hofmann Industries, Inc. Sinking Springs, Pa.	11- 2-51	x			D-25
The Hoover Company Kingston-Conley Div. No. Plainfield, N. J.	3- 6-50 4-11-56	x	x	x	D-5 D-35
Hotpoint, Inc. Milwaukee, Wisc.	1- 1-49 4- 7-52 2-17-53 2- 8-55 8-31-56	x x x x	x x	x	D-1 D-25 D-26 D-31 D-36
Houdaille-Hershey Corp. Buffalo, N. Y.	10-18-51 11- 1-54	x x	x		D-25 D-31
The Huffman Mfg. Co. Dayton, Ohio	2- 7-55 2- 7-55			x x	D-15 D-15
Hydraulic Tools Corp. Sheboygan, Wis.	11-25-52			x	D-9
Ideal Brass Works, Inc. St. Paul, Minn.	2-16-56	x	x		D-35
Illinois Fabricators Kankakee, Ill.	4-10-53	x	x		D-27

242

Ill. Watch Case Co. Elgin, Ill.	1-16-50			x	D-4
Imperial Lamp & Shade Co., Philadelphia, Pa.	6-10-49			x	D-4
Independent Lock Co. Fitchburg, Mass.	4-26-51			x	D-7
Industrial Lamp Corp. Elkhart, Ind.	10-29-51	x	x		D-25
Industrial Wire Cloth Prod. Corp. Wayne, Mich.	6-27-56	x	x		D-35
Inland Steel Co. E. Chicago, Ind.	4-20-55			x	D-32

I	II	III	IV	V	VI
Licensee	Date	Without Air	Active Without Air on 10-11-56	With Air	Form Used
I.B.M. Corp.	1- 5-48			x	D-1
Endicott, N. Y.	2-15-56	x	x		D-35
	2-15-56	x	x		D-35
Intl. Hdwe. Mfg. Co. Detroit, Mich.	7-22-54	x	x		D-31
Intl. Harvester Co. Chicago, Ill.	8-11-53	x			D-27
Interstate Prec. Prod. Corp. Anaheim, Calif.	4- 7-54	x	x		D-29
Ironrite, Inc.	3-15-50			x	D-5
Mt. Clemens, Mich.	12-11-52	x	x		D-26
Jackes-Evans Mfg. Co. St. Louis, Mo.	9- 8-53			x	D-12
243					
Jamestown Metal Corp.	10-18-48			x	D-1
Jamestown, N. Y.	7-10-51			x	D-7
Jaybee Mfg. Co. Los Angeles, Calif.	4-16-56			x	D-20
Johns-Manville Prods.	5-20-52	x	x		D-26
Waukegan, Ill.	5-20-52	x	x		D-26
Jones & Laughlin Steel Corp. Pittsburgh, Pa.	1- 5-56			x	D-20
H. L. Judd Co. Wallingford, Conn.	2-26-48			x	D-1
Kaywood Corp. Benton Harbor, Mich.	11-15-48			x	D-1
Keeler Brass Co.	8-19-48			x	D-1
Grand Rapids, Mich.	12-10-54	x	x		D-31
O. S. Keene Mach. Co., Inc. Middlebury, Ind.	4-26-55	x	x		D-32
Kent-Moore Organization, Inc. Jackson, Mich.	9-23-52	x			D-26
Keystone Elec. Mfg. Co.	2-20-52	x			D-26
Philadelphia, Pa.	9-20-54	x	x		D-31
King-Seeley Corp. Scio, Michigan	4-16-54	x	x		D-29
Kirsch Co.	3-22-50			x	D-5
Sturgis, Mich.	6-23-52	x	x		D-26
	8-14-56	x	x		D-35
Knox-Warrenton Co. Thomson, Ga.	1-26-51			x	D-3

244

I Licensee	II Date	III Without Air	IV Active Without Air on 10-11-56	V With Air	VI Form Used
Koppers Co., Inc. Baltimore, Md.	1-10-51			x	D-6
Kuehne Mfg. Co. Mattoon, Ill.	2- 6-51			x	D-3
	12-23-53	x	x		D-29
	8- 8-55	x	x		D-32
Kwikset Locks, Inc. Anaheim, Calif.	10- 6-53	x	x		D-29
L C N Closers, Inc. Princeton, Ill.	12- 3-53	x	x		D-29
Landers, Frary & Clark New Britain, Conn.	8- 7-48			x	D-1
	11-17-51	x			D-25
Lawn-Boy Div. of Outboard, Marine & Mfg. Co. Lamar, Mo.	11- 6-52			x	D-9
Lee Metal Prods. Co. Baltimore, Md.	10- 5-48			x	D-1
Lennox Industries, Inc. Columbus, Ohio	4-10-56	x	x		D-35
The Lima Register Co. Lima, Ohio	6-29-54	x	x		D-29
Lincoln Eng. Co. St. Louis, Mo.	8- 3-53	x	x		D-29
Lithonia Finishing Corp. Conyers, Ga.	9-14-56	x	x		D-36
The Lobdell-Emery Mfg. Co. Alma, Mich.	4-19-54			x	D-12
	4-30-54	x	x		D-29
	8-29-55	x	x		D-35

245

Lockvent Chester, Va.	5-26-53			x	D-10
Lonergan Mfg. Co. Albion, Michigan	10-23-51	x			D-25
Los Angeles Parkerizing Los Angeles, Calif.	2-14-55			x	D-15
Lyle Signs, Inc. Minneapolis, Minn.	5-16-56	x	x		D-35
E. J. McAleer & Co., Inc. Philadelphia, Pa.	1-27-48			x	D-1
Geo. F. McMurray Co. Burbank, Calif.	7-17-51	x	x		D-24
Manhattan Castings, Inc. Patterson, N. J.	2-17-49			x	D-1
Manitowoc Equip. Works	1-12-55			x	D-35
Div. of Manitowoc Co., Inc.	1-12-55			x	D-35
Maremount Automotive Prod., Inc. Harvey, Ill.	8-18-49			x	D-4

I	II	III	IV	V	VI
Licensee	Date	Without Air	Active Without Air on 10-11-56	With Air	Form Used
Markstone Mfg. Co. Chicago, Ill.	12-14-49			x	D-4
Martin-Parry Corp. Toledo, Ohio	6-30-48			x	D-1
	9- 1-48			x	D-1
	9- 1-48			x	D-1
The Maytag Co. Newton, Iowa	3-18-55	x	x		D-31
Meldrum Mfg. & Eng. Co. St. Paul, Minn.	2- 1-52	x	x		D-25
246					
Melrose Lighting Co. Philadelphia, Pa.	10-18-55	x	x		D-35
Metal Bed Rail Co. Lexington, N. C.	2-13-56	x	x		D-35
Metal Industries, Inc. Indianapolis, Inc.	10-12-51	x			D-25
	3-10-52			x	D-7
	6- 8-51			x	D-7
Metal Mouldings Corp. Detroit, Michigan	6- 8-51			x	D-7
	6- 8-51			x	D-7
	6- 8-51			x	D-7
Metalcraft Corp. Chicago, Ill.	4-23-54	x	x		D-29
Metalcraft Prod., Inc. Philadelphia, Pa.	9-10-56	x	x		D-36
Mid-City Processing Corp. Chicago, Ill.	1-29-48			x	D-1
Midwest Chandelier Co. No. Kansas City, Mo.	6- 8-56	x	x		D-36
Midwest Mfg. Corp. Galesburg, Ill.	7-26-55	x	x		D-35
Miller Company Utica, Ohio	10-16-53	x	x		D-29
Miller Bros. Co. Los Angeles, Calif.	7- 6-51	x	x		D-24
Mills Metal Compartment Co. Upper Sandusky, Ohio	3- 2-53	x	x		D-27
Mimar Prod. Inc. Brooklyn, N. Y.	2-25-49			x	D-4
Miro-Flex Co., Inc. Wichita, Kans.	1-30-52	x	x		D-25
	9- 9-52	x			D-26
	2-53	x	x		D-26
247					
The Mitchell-Bentley Corp. Ionia Mfg. Co. Div. Iona, Mich.	7- 2-56	x	x		D-35
	8-17-56			x	D-21

I	II	III	IV	V	VI
Licensee	Date	Without Air	Active Without Air on 10-11-56	With Air	Form Used
Mitchell Mfg. Co. Ft. Smith, Ark.	5-10-56			x	D-12
Modern Tool & Die Die Co. Cleveland, Ohio	3- 8-51			x	D-3
Moe Light, Inc. (Thomas, Ind.) Ft. Atkinson, Wis.	6-16-50			x	D-5
Mohawk Brush Co. Albany, New York	12-4-52	x	x		D-26
Monark Silver King, Inc. Chicago, Ill.	8- 5-54 11-30-54 11-30-54	x	x	 x x	D-31 D-14 D-14
Monroe Auto Equip. Co. Monroe, Mich.	1-25-51 1-11-54 6-12-16	x x x	x x x		Typed D-27 D-35
Monroe Calculating Mach. Orange, N. J.	4-26-48			x	D-1
Motor Products Corp. Detroit, Mich.	10-27-48 6-13-50			x x	D-1 D-5
Marion Industries Div. of Motor Prod. Corp. Marion, Ohio	6-13-50 6-13-50 6-13-50			x x x	D-5 D-5 D-5
Mouldings Div. of Thompson Industries Indianapolis, Ind.	5-14-56 7-30-56	x x	x x		D-35 D-35
248					
Mueller Climatrol Div. of Worthington Corp. Milwaukee, Wis.	2- 6-56	x	x		D-35
The Murray Corp. of Amer. Detroit, Mich.	7-27-49			x	D-4
Murray-Ohio Mfg. Co. Lawrenceburg, Tenn.	4- 1-54	x	x		D-29
Natl. Engineering & Mfg. Co. Kansas City, Mo.	7- 6-53 10-18-54			x x	D-12 D-14
Natl. Steel Construction Co. Seattle, Wash.	8-23-48			x	D-1
L. R. Nelson Mfg. Co., Inc. Princeville, Ill.	7-21-55	x	x		D-32
Nesco., Inc. Milwaukee, Wisconsin	5-14-51 5-18-55	x x			D-24 D-32
Newark Stove Co. Newark, Ohio	9- 5-56			x	D-20
Norge Div. Borg-Warner Corp. Muskegon Heights, Mich.	7-11-49 12-28-55 4-24-56	 x x	 x x	x	D-4 D-35 D-35

I Licensee	II Date	III Without Air	IV Active Without Air on 10-11-56	V With Air	VI Form Used
Norris-Thermador Corp. Los Angeles, Calif.	7- 6-54	x	x		D-20
Natl. Lock Co. Rockford, Ill.	9- 1-48 11- 8-50			x x	D-1 D-5
No. Vernon Industries, Inc No. Vernon, Ind.	3-22-56 4-25-56	x x	x		D-35 D-35
249					
No. Illinois Gas Co. Belwood, Ill.	6-22-56	x	x		D-35
Novi, Equip. Co. Novi, Mich.	3- 8-49 1-13-54	x		x	D-4 D-29
Nuside Metal Prod. Div. Sharon Coal & Ice Co. Sharon, Pa.	5-23-55			x	D-16
Ny-lint Tool & Mfg. Co. Rockford, Ill.	11-25-53 5-15-51	x	x	 x	D-29 D-7
The Ohio Can & Crown Co. Massillon, Ohio	1-31-52	x			D-25
Ohio Elec. Mfg. Co. Cleveland, Ohio	4-10-53	x	x		D-27
Olin Mathieson Chem. Corp. Olin Industries, Inc. E. Alton, Ill.	1-10-51			x	D-3
C. A. Olsen Mfg. Co. Div. Westinghouse Elec. Corp. Elyria, Ohio	4-20-53 2-28-56	x	x	x	D-10 D-35
Pacific All-Fiber Drums, Inc. Alhambra, Calif.	7- 5-51	x			D-24
Pacific Iron & Steel Corp. of Los Angeles Los Angeles, Calif.	3- 3-52			x	D-7
Pacific Paint & Varnish Co. Berkeley, Calif.	6-13-55	x	x		Typed
250					
Pal Products, Inc.	10- 8-51			x	D-7
No. Ind. Steel Supply Co., Inc., Michigan City, Ind.	5-31-55			x	D-16
Palmer Mfg. Corp. Phoenix, Ariz.	10-14-53			x	D-12
Paper Mate Mfg. Co. Culver City, Calif.	5-21-56	x	x		D-35
Pemco Corp. Research Div. Baltimore, Md.	8-21-56	x	x		Typed

I Licensee	II Date	III Without Air	IV Active Without Air on 10-11-56	V With Air	VI Form Used
Penberthy Injector Co. Detroit, Mich.	12- 3-48			x	D-1
Penco Metal Prod. Div. Alan Wood Steel Co. Philadelphia, Pa.	9-12-55	x	x		D-35
Peninsular Metal Prod. Corp.	9- 6-49			x	D-4
Detroit, Mich.	7- 7-52			x	D-9
Penn Metal Corp. of Pa. Philadelphia, Pa.	1-12-53	x			D-26
Penn. Range Boiler Co. Philadelphia, Pa.	4-30-56	x	x		D-32
Peoria Consolidated Mfgrs. Inc. Peoria, Ill.	9-11-52			x	D-9
Perfection Finishing Corp. Wauseon, Ohio	12-13-54	x	x		D-31
251					
Perfection Ind. Div. Hupp Corp. Cleveland, Ohio	3-30-56			x	D-20
Philco Corp. Dexter Div. Alliance, Ohio	9-10-51	x			D-24
Pioneer Gen-E-Motor Corp. Chicago, Ill.	8-14-50			x	D-5
Pitts. Corning Corp. Port Allegheny, Pa.	7-19-55			x	Typed
Pitts. Equitable Meter Div. Rockwell Mfg. Co. Pittsburgh, Pa.	4- 6-49			x	D-4
Pitts. Plate Glass Co. Milwaukee, Wisconsin	7- 1-55	x	x		Typed
Fayette R. Plumb, Inc. Philadelphia, Pa.	1- 4-49			x	D-1
Pollak Engineering & Mfg. Corp. Arlington, N. J.	1-30-48			x	D-1
Pollock Paper Corp. Middletown, Ohio	5-31-49			x	D-4
Poloron Prod. Inc.	7- 1-53			x	D-9
New Rochelle, N. Y.	9-22-55			x	D-20
Poray, Inc.	8-20-53	x			D-29
Chicago, Ill.	10-26-53			x	D-12

252

I	II	III	IV	V	VI
Licensee	Date	Without Air	Active Without Air on 10-11-56	With Air	Form Used
Porcelain Enamel Prod. Corp. W. Concord, Mass.	10-17-52			x	D-10
Precision Castings Co. Kalamazoo, Mich.	6- 4-52			x	D-9
Pressed Steel Tank Co. Milwaukee, Wis.	12-30-48			x	D-1
	12-20-48			x	D-1
Proctor Elec. Co. Philadelphia, Pa.	1- 4-49			x	D-1
	6-19-51	x	x		D-24
	8-15-51			x	D-7
Production Enterprises Inc. Brooklyn, N. Y.	1-28-49			x	D-1
Progress Mfg. Co., Inc. Philadelphia, Pa.	9-17-53	x	x		D-29
	1-18-56	x	x		D-35
Providence Metallizing Co. Providence, R. I.	12-11-51			x	D-7
Public Service Elec. & Gas Co. Newark, N. J.	8-24-51			x	D-7
Radio Steel & Mfg. Co. Chicago, Ill.	10-26-55	x	x		D-35
	6- 8-56	x	x		D-35
The Randall Co. Cincinnati, Ohio	5-10-50			x	D-5
	5-10-50			x	D-5
	5-10-50			x	D-5
Reading Hdwe. Corp. Reading, Pa.	1-10-50			x	D-5

253

Red Lion Cabinet Co. Red Lion, Pa.	1-31-55	x	x		D-32
The Regina Corp. Rahway, N. J.	5-10-56	x	x		D-35
Remington Arms Co., Inc. Bridgeport, Conn.	4- 7-51			x	D-8
	10- 5-51			x	D-8
	9-17-52			x	D-9
	9-17-52			x	D-9
Reo Motors Inc. Lansing, Mich.	7- 8-52	x			D-26
Paul R. Repath Co. Los Angeles, Calif.	4- 3-52			x	D-7
Republic Steel Corp. Canton, Ohio	4-20-55	x	x		D-32
Reynolds Metals Co. Louisville, Ky.	5-18-48			x	D-1
	8-31-48			x	D-1
	12-30-52	x	x		D-26
Quiet-Heet Mfg. Co. Newark, N. J.	11-20-52			x	D-9

I	II	III	IV	V	VI
Licensee	Date	Without Air	Active Without Air on 10-11-56	With Air	Form Used
Rheem Mfg. Co.	3-15-51			x	D-3
South Gate, Calif.	4- 7-55	x	x		D-32
	8-30-55	x	x		D-32
	5- 7-51	x			D-24
	8-25-51	x			D-24
	7- 6-51	x			D-24
	6-21-51			x	D-7
Roberts Mfg. Co. Cleburne, Texas	6-21-51			x	D-7
254					
Rockwell Mfg. Co.	5-30-50			x	D-5
Regulator Div. Norwalk, Ohio	3-22-51			x	D-3
Ronson Art Metal Works Inc. Newark, N. J.	4-21-49			x	D-4
Royal Vacuum Cleaner Co. Cleveland, Ohio	11-17-48			x	D-1
F. C. Russell Co. Columbiana, Ohio	12-28-55	x	x		D-35
Ruud Mfg. Co. Kalamazoo, Mich.	12-30-48			x	D-1
Safety First Prod. Corp. Elmsford, N. Y.	10- 5-51	x			D-24
St. John & Co. Chicago, Ill.	7-25-52	x			D-20
Sanymetal Prod. Co. Cleveland, Ohio	3-12-52	x	x		D-25
Savage Arms Corp. Chicopee Falls, Mass.	3-12-48			x	D-1
Sawhill Tubular Prod.	6-25-53			x	D-10
Sharon, Pa.	*10-19-49			x	D-4
Schlage Lock Co. San Francisco, Calif.	1- 9-48			x	D-1
Scott Paper Co. Chester, Pa.	3- 1 54			x	D-13
Scovill Mfg. Co. Waterbury, Conn.	5- 8-56	x	x		D-35
255					
Screw Machine Prod. Co.	8-14-51			x	D-7
Portland, Oregon	4- 7-54			x	D-13
Security Plating Corp. Los Angeles, Calif.	6-22-53			x	D-12
L. J. Segli Co. Chicago, Ill.	4-16-54	x	x		D-29

I Licensee	II Date	III Without Air	IV Active Without Air on 10-11-56	V With Air	VI Form Used
Servel, Inc. Evansville, Ind.	9- 2-48			x	D-1
	9- 2-48			x	D-1
Seymour Tool & Eng. Co. Seymour, Ind.	8- 8-49			x	D-4
	6- 6-50			x	D-5
	*11-17-50	x	x		Typed
Sheller Mfg. Co. Portland, Ind.	9-18-50	x			Typed
	11-12-53	x	x		D-29
	4-22-54	x	x		D-29
Shwayder Bros. Inc. Detroit, Mich.	7-20-50			x	D-5
	6-27-52			x	D-9
	5- 6-54	x	x		D-29
	5-11-54	x	x		D-29
	5- 3-55	x	x		D-32
	5- 6-54	x	x		D-29
Simonson Metal Prod. Co. Chicago, Ill.	1-23-50			x	D-5
A. L. Smith Iron Co. Chelsea, Mass.	5- 1-49			x	D-4
	6-27-55	x	x		D-32
Smith-Corona, Inc. Groton, N. Y.	4- 9-56	x	x		D-32
H. P. Snyder Co. Little Falls, N. Y.	10-26-51			x	D-7
256					
Soreng Sampsel Time Control Inc. Spring Valley, Ill.	6-12-50			x	D-5
So. Calif. Pipe & Steel Co. Los Angeles, Calif.	2- 5-53			x	D-9
So. Calif. Gas Co. Los Angeles, Calif.	8-15-55	x	x		D-35
So. Pine Lumber Co. Diboll, Texas	10-31-55	x	x		D-35
So. States Iron Roofing Savannah, Ga.	4- 8-52	x			D-26
	11-23-49			x	D-3
Speed Queen Corp. Ripon, Wis.	11-23-49			x	D-3
	4-24-51	x	x		D-23
	4-27-56	x	x		D-35
Sparo Elec. Corp. Cleveland, Ohio	4-22-49			x	D-4
Stamping Prods. & Mfg. Co. Detroit, Mich.	4-19-48			x	D-1
Standard Tank & Seat Co. Camden, N. J.	6- 9-55	x	x		D-32
Standard Thompson Corp. Vandalia, Ohio	10-18-52	x	x		D-26
Stanley Home Prods. Inc. Westfield, Mass.	2-18-48			x	D-1

257

I	II	III	IV	V	VI
Licensee	Date	Without Air	Active Without Air on 10-11-56	With Air	Form Used
Stanley-Judd Div. Stanley Works Wallingford, Conn.	6- 7-51	x	x		D-24
Stant Mfg. Co. Connersville, Ind.	3-28-51			x	D-3
	12- 3-51			x	D-7
Steber Mfg. Co, Broadview, Ill.	10- 5-53			x	D-12
Steelcase, Inc. Grand Rapids, Mich.	4-19-48			x	D-1
Steger Prods. Mfg. Co. Steger, Ill.	11-16-48			x	D-1
Stor-All Corp. Inglewood, Calif.	8- 4-51	x			D-24
Stratton & Terstegge Co. Louisville, Ky.	6-26-53	x	x		D-29
Structo Mfg. Co. Freeport, Ill.	11-12-54	x	x		D-31
	12-16-54	x	x		D-31
Studebaker Corp. So. Bend, Ind.	9-16-48			x	D-1
	5-22-55			x	D-7
	7-15-52			x	D-9
	9-12-52			x	D-9
	10- 7-52	x			D-26
	12-21-54	x	x		D-31
	7-15-52			x	D-9
Sun Engrng. & Mfg. Co., Inc. St. Petersburg, Fla.	8- 9-55			x	D-20

258

Sunbeam Corp. Chicago, Ill.	7- 8-53	x	x		D-27
	6-29-54	x	x		D-29
	3-27-56	x	x		D-35
Sunbeam Lighting Co. Los Angeles, Calif.	5-23-55	x	x		D-32
Swanson, Inc. Monroe, Ga.	5-15-52			x	D-7
Sylvania Elec. Prods. Inc. Ann Arbor, Mich. (formerly Argus Cameras)	6- 9-55	x	x		D-32
Taylor-Wharton Iron & Steel Co. Cincinnati, Ohio	4-28-52	x	x		D-25
Ternes Steel Co. Detroit, Mich.	9-15-55	x	x		D-35
Textile Machine Works Reading, Pa.	5- 9-49			x	D-4

I	II	III	IV	V	VI
Licensee	Date	Without Air	Active Without Air on 10-11-56	With Air	Form Used
Thomas Industries, Inc.	12-20-51	x	x		D-25
Princeton, Ky.	7- 8-53	x			D-27
	2- 8-55			x	D-14
Thompson Prods. Inc.	10-11-48			x	D-1
Cleveland, Ohio	5- 9-49			x	D-4
	6-16-53			x	D-10
Thor Corporation	12-29-52	x			D-26
Chicago, Ill.					
Timken Roller Bearing Co.	11-24-52			x	D-9
Canton, Ohio					
259					
Tonka Toys, Inc.	5- 6-55	x	x		D-32
Mound, Minn.					
Troy Sunshade Co.	5- 1-52			x	D-7
Troy, Ohio					
Turnbull Mfg. Co. & Distributing Co.	3- 8-48			x	D-1
Detroit, Mich.					
Turner Brass Works	10-19-48			x	D-1
Sycamore, Ill.					
Tusco Mfg. Co.	3- 2-48			x	D-1
Gnadenhutten, Ohio	12- 2-53	x	x		D-29
Twin Cities Arsenal	8-22-50			x	D-5
Federal	3-21-51			x	D-3
Cartridge Corporation	10-29-51			x	D-7
Minneapolis, Minn.	2-26-52			x	D-7
Underwood Corp.	2-21-56	x	x		D-35
Hartford, Conn.					
Union Hdwe. Co.	9- 7-49			x	D-4
Torrington, Conn.					
Union Metal Mfg. Co.	12- 6-48			x	D-1
Canton, Ohio					
Union Parts Mfg. Co., Inc.	4-26-55	x	x		D-32
New Brunswick, New Jersey					
Union Steel Chest Corp.	7-13-49			x	D-4
LeRoy, New York.					
260					
United Spec. of Birmingham, Inc.	2-11-53	x	x		D-26
Birmingham, Ala.					
United Spec. Co.	6-14-54	x	x		D-29
Chicago, Ill.	11- 1-54			x	D-13
U. S. Defense Corp.	2-26-52			x	D-7
St. Louis Ordnance Plant	1-12-53			x	D-9
St. Louis, Mo.	9-16-53			x	D-12

I Licensee	II Date	III Without Air	IV Active Without Air on 10-11-56	V With Air	VI Form Used
U. S. Rubber Co. Mishawaka, Ind	1-23-48 5- 5-50			x x	D-1 D-5
United Steel Barrell Co. Philadelphia, Pa.	8-10-49			x	D-4
United Stove Co. Detroit, Mich.	9-21-49			x	D-1
Van Brode Milling Co., Inc. Clinton, Mass.	3-10-55			x	D-15
Vernco Corp. Columbus, Ind.	6-12-56	x	x		D-36
Vickers, Inc. Joplin, Mo.	9-10-56	x	x		D-35
Virco Mfg. Corp. Los Angeles, Calif.	12-20-50			x	D-3
Vulcan Containers Inc. Bellwood, Ill.	9-19-51	x	x		D-24
261					
E. R. Wagner Mfg. Co. Milwaukee, Wis.	1- 2-49 5-23-55	x	x	x	D-1 D-31
The Walker Mfg. Co. Racine, Wis.	1-24-49 5-11-49			x x	D-1 D-4
Walker-Mich. Div. Walker Mfg. Co. of Wis. Jackson, Mich.	10-18-54	x			D-31
Wallkill Machine Works Inc. Walden, N. Y.	6-18-48			x	D-1
Waterman-Waterbury Co. Minneapolis, Minn.	4-27-56	x	x		D-35
Waverly Prods. Inc. Kansas City, Mo.	6-15-55	x	x		D-32
The Wayne Pump Co. Salisbury, Md.	10-17-55	x	x		D-35
The Weatherhead Co. Cleveland, Ohio	6- 3-48 5- 1-49			x x	D-1 D-4
Webcor, Inc. Chicago, Ill.	6-29-54	x	x		D-29
Webster-Chicago Corp. Chicago, Ill.	12-12-50			x	D-5
Western Tool & Stamping Co. Des Moines, Iowa	3- 1-50 5-11-56	x	x	x	D-5 D-35
262					
Westinghouse Elec. Corp. Metuchen, N. J.	6-27-55 5- 7-56 5- 7-56 7- 2-56	x x x x	x x x x		D-32 D-35 D-35 D-35

I	II	III	IV	V	VI
Licensee	Date	Without Air	Active Without Air on 10-11-56	With Air	Form Used
Wheeling Steel Corp.	7-26-48			x	D-1
	4-21-50			x	D-1
Wheeling, W. Va.	8-23-55	x			D-35
Whirlpool-Seeger Corp.	6- 1-49			x	D-4
St. Paul, Minn.	6- 1-49			x	D-4
	11- 8-51	x	x		D-25
	5- 8-52	x	x		D-26
	6-17-52	x			D-26
	12- 4-52	x	x		D-26
	12- 4-52	x	x		D-26
	4-30-54	x	x		D-29
	6- 3-55	x			D-31
	6-16-55	x	x		D-32
	2-15-56	x	x		D-35
	2-15-56	x	x		D-35
	3-16-56	x	x		D-35
Wilshire Mfg. Co. Los Angeles, Calif.	5- 4-53	x	x		D-27
Walter C. Williams Co. Wilkes-Barre, Pa.	3- 6-52			x	D-7
Winchester Repeating Arms Co. New Haven, Conn.	1-12-51			x	D-3
Window Controls, Inc. Millville, N. J.	6-19-53	x	x		D-29
The Wood Shovel & Tool Co. Piqua, Ohia	11-27-53			x	D-12
The Woodlin Metal Prods. Marshall, Mich.	10-14-53	x	x		D-29
263					
Albert Wright Defense Div., Accurate Screw Machine Products Emeryville, California	9-12-51			x	D-7
Yale & Towne Mfg. Co. Stamford Division Stamford, Conn.	9-19-50			x	D-5
Yoder Mfg. Co. Los Angeles, Calif.	5-11-48			x	D-1
	8- 9-51			x	D-7
L. A. Young Spring & Wire Corporation Detroit, Mich.	8- 9-51			x	D-7
	11- 6-51	x	x		D-25
	6- 1-49			x	D-4
	9-13-50			x	D-5
	3-27-52	x			D-26
	2- 7-55	x			D-31
	8- 9-51			x	D-7

I	II	III	IV	V	VI
Licensee	Date	Without Air	Active Without Air on 10-11-56	With Air	Form Used
The Youngstown Steel Door Co. Youngstown, Ohio	1-20-48			x	D-1
Youngstown Sheet & Tube Co. Youngstown, Ohio	8-13-48			x	D-1
	3- 7-50			x	D-4
	3-29-50			x	D-4
*Interstate Metal Prod. Inc. of Ind. Michigan City, Ind.	*3-20-51	x	x		D-23
*Rowe Mfg. Co., Inc. New York, N. Y.	*7- 6-53			x	D-9
	*7- 6-53			x	D-9
*Sundstrand Machine & Tool Co. Rockford, Ill.	*3- 1-56	x	x		D-35
*Russakov Can Co. Chicago, Ill.	*6-22-50			x	D-5
264					
*John C. Virden Cleveland, Ohio	*1- 7-54	x	x		D-29
Consolidated Gen. Products Inc. Houston, Texas	12-15-48			x	D-1
*Jeavons Japanning Co. Cleveland, Ohio	*6-11-52			x	D-9
Cleveland Heater Co. Cleveland, Ohio	5-16-48			x	D-1

NOTE.

There are certain discrepancies between this Exhibit E on the one hand and, on the other hand, the answer to Interrogatory 3 and Exhibit B filed with Defendant's Answers to Plaintiff's earlier interrogatories. Such discrepancies and the explanations thereof are as follows:

1. The number of licenses granted prior to the filing of the complaint is 733 and not 732 as was inadvertently specified in the answer to Interrogatory 3 (a).

2. The licensees marked with an asterisk in column I of this exhibit were inadvertently omitted from Exhibit B.

3. The dates marked was an asterisk in column II of this exhibit were inadvertently omitted from Exhibit B.

4. Where one licensee had more than one license of the same date, such date was not repeated in Exhibit B but is repeated in this Exhibit E.

5. In Exhibit B the Goerlich license dated February 25, 1948 is also listed under A. P. Parts Corp., the parent of Goerlich. In this Exhibit E this double inclusion is avoided and only the license under A. P. Parts Corp. is listed.

6. The Rockwell Manufacturing Co., Dubois, Pa., license dated October 21, 1946 was inadvertently listed in Exhibit B and has been omitted in this Exhibit E.

265

Exhibit F.

Licenses		Patents or Patent Applications Listed	
Crosley Div. of Avco Mfg. Corp. Richmond, Indiana	3-30-49	Patents	
		2,047,525	2,425,652
		2,097,233	2,428,991
(2 agreements)		2,221,338	2,442,986
		2,247,963	2,336,953
		2,334,648	2,463,422
		2,335,790	2,465,128
		2,417,798	2,466,906
		2,421,787	
		Patent Applications	
		33,371	50,407
		452,632	516,256
		541,579	542,503
		542,558	586,582
		589,719	596,870
		619,371	626,631
		629,608	632,473
		637,692	654,830
		662,319	671,037
		689,116	695,543
		702,452	714,830
		746,527	757,732
		768,014	791,582
Crosley Div. of Avco Corp. Nashville, Tenn.	2-2-54	Patents	
		2,097,233	2,221,338
		2,247,963	2,270,341
		2,334,648	2,335,790
		2,417,798	2,421,787
		2,425,652	2,428,991
		2,442,986	2,446,953
		2,463,422	2,465,128
		2,466,906	2,466,877
		2,509,276	2,509,277
		2,509,448	2,526,763
		2,526,780	2,531,542
		2,544,806	2,546,701
		2,550,657	2,551,035
		2,553,724	2,559,225
		2,567,781	2,568,611
		2,632,716	2,636,471
		2,650,329	2,651,287
		2,655,128	2,658,009
		2,658,472	2,662,883

266

Crosley Div. of Avco Mfg. Corp. (Cont'd)			
		Patent Applications	
		452,632	541,579
		626,631	662,319
		689,116	

Licenses		Patents or Patent Applications Listed	
E. I. Dupont De Nemours & Co. Penns Grove, N. J.	1-18-49	Patents	
		2,247,963	2,270,341
		2,334,648	2,335,790
		2,359,476	2,417,798
		2,421,787	2,425,652
		2,428,991	2,442,986
		2,444,144	2,446,953
		2,463,422	2,465,128
		2,466,906	
E. I. Dupont De Nemours & Co. East Chicago, Indiana	11-4-49	Patents	
		2,247,963	2,270,341
		2,334,648	2,335,790
		2,359,476	2,417,798
		2,421,787	2,425,652
		2,428,991	2,442,986
		2,444,144	2,446,953
		2,463,422	2,465,128
		2,466,906	
Durham Mfg. Corp. Muncie, Indiana	3-27-56	Patents	
		2,247,963	2,270,341
		2,334,648	2,359,476
		2,417,798	2,421,787
		2,425,652	2,428,991
		2,442,986	2,444,144
		2,446,953	2,463,422
		2,465,128	2,466,906
		2,466,877	2,509,276
		2,509,277	2,509,448
		2,526,763	2,526,780
		2,531,542	2,554,806
		2,546,701	2,549,927
		2,550,657	2,551,035
		2,553,724	2,559,225
		2,567,781	2,568,611
		2,632,716	2,636,471
		2,640,459	2,650,329
		2,651,287	2,655,128
		2,658,009	2,658,472
		2,662,833	2,684,656
267			
Durham Mfg. Corp. (Cont'd)		Patents	
		2,685,536	2,690,730
		2,695,002	2,697,411
		2,698,814	2,708,549
		2,706,964	2,711,155
		2,718,477	2,723,646
		2,723,921	2,724,661
		2,728,606	2,728,607
		2,728,689	2,729,191
		2,730,460	2,730,461
		2,730,968	2,731,589
		2,733,171	2,736,671

Licenses		Patents or Patent Applications Listed
Gibson Refrigerator Co. Greenville, Mich. (2 agreements)	8-2-49	Patents
		2,047,525 2,097,233 2,221,338 2,247,963 2,334,648 2,335,790 2,417,798 2,421,787 2,425,652 2,428,991 2,442,986 2,446,953 2,463,422 2,465,128 2,466,906
		Patent Applications
		33,371 50,407 452,632 516,256 541,579 542,503 542,558 586,582 589,719 596,870 619,371 626,031 629,608 632,473 637,692 654,830 662,319 671,037 689,116 695,543 702,452 714,830 746,527 757,732 768,014 791,582
268		
Huffman Mfg. Co. Dayton, Ohio (2 agreements)	2-7-55	Patents
		2,247,963 2,270,341 2,334,648 2,417,798 2,421,787 2,425,652 2,428,991 2,442,986 2,446,953 2,463,422 2,465,128 2,466,906 2,486,877 2,509,276 2,509,277 2,509,448 2,526,763 2,531,542 2,544,306 2,546,701 2,550,657 2,551,035 2,553,724 2,559,225 2,567,781 2,568,611 2,632,716 2,636,471 2,650,329 2,651,287 2,655,128 2,658,472 2,658,009 2,662 833 2,684,656 2,685,536 2,690,730 2,695,002 2,697,411

Licenses		Patents or Patent Applications Listed	
Scott Paper Co. Chester, Pa.	3-1-54	Patents	
		2,247,963	2,270,341
		2,334,648	2,417,798
		2,421,787	2,425,652
		2,428,991	2,442,986
		2,446,953	2,463,422
		2,465,128	2,486,906
		2,466,877	2,509,276
		2,509,277	2,509,448
		2,526,763	2,531,542
		2,544,806	2,546,701
		2,550,657	2,551,035
		2,553,724	2,559,225
		2,567,781	2,632,716
		2,636,471	2,650,320
		2,655,128	2,662,833
Stant Mfg. Co. Connersville, Ind.	12-3-51	Patents	
		2,247,963	2,270,341
		2,334,648	2,417,798
		2,421,787	2,425,652
		2,428,991	2,442,986
		2,446,953	2,463,422
		2,465,128	2,486,877
		2,509,276	2,509,277
		2,609,448	2,526,763
		2,531,542	2,544,806
		2,546,701	2,550,657
		2,551,035	2,553,724
		2,559,225	2,567,781

269 **Exhibit G.**

Record of Shipment

Ransburg Electro-Coating Corp. 5963
1234 Barth Avenue
Indianapolis 7, Indiana 5964

To be Shipped ppd. Via Motor Fr. Date 6-19-56

Order No. A56068

Ship to: Union Parts Mfg. Co.
U. S. Highway 1 at Black Horse Rd.
New Brunswick, N. J. Shipment completed.....

	Quant.	Part No.	Description	Price	Extension
√	1	212F	Voltage Spply #212F235 #H2477		
√	2	ML44E	Rectifier Tubes #H3106		Memo
√	1	136	Control Panel consisting of		#3
		1-112.	Spark guard control panel		
		1-114	Spark Guard Relay Panel		
		1-116	Voltage Control Panel		
		1-208	Pump & Rotator Controller Pump Controller		
√	1	RM-3586	Bypass Switch		
√	1	118	Constant Voltage Transformer		
√	1	230	Push Button Pilot Light Station		
√	2	135	Explosion Proof Switches		
√	1	133	Alarm Bell		
√	100′	RM-3	Shielded Cable		
√	75′	RM-36	3ø-High Voltage Wire		
√	1	RM-10	Drum, Transformer Oil		
√	10′	Rm-5	$\frac{1}{2} \times \frac{1}{4}$ Fluid Hose		
√	30′	RM-35	$\frac{3}{8} \times \frac{1}{8}$ Fluid Hose		
√	6′	RM-114	Polyethylene Tubing		
√	4	RM-414	Hose Fittings		
√	4	105/96	Hose Fittings		

270

√	1	143	Pump Unit #143265 w/1-105/a/Fluid Pump
√	1	143-1249	Drive Cover
√	1	143-1250	Pump Cover
√	1	138-300	Support Assy./1613 Insul. Tube w/1336-7 Trunions w/110-28
√	1	162-C	Disc Rotator Motor
√	1	1936-25	Upfeed Disc 25"
√	1	1709	Upfeed Tube
√	1	138-1119	Pedestal
√	1	128-1747	Terminal Puller
√	1	128-14	Snap Ring Pliers
√	1	128-15	Snap Ring Pliers
√	1	128-1745	Tube Puller

271

Spare Parts List.

√	1	MI.44E	Rectifier Tubes H6440
√	1	112-27	6x5 Rectifier Tube
√	1	112-30	2050 Thyratron Tube
√	1	105/94	Fluid Pump
√	1	162-C	Disc Rotator Motor
√	1	1936-25	25" Upfeed Disc
√	1	112-25	2 ampere Fuse

272 Exhibit H.

Name of Licensee	Date of Agreement
Aero Metalcraft Company (formerly Aero Muffler Corp.) Rockleigh, N. J.	July 13, 1945
Ainsworth Manufacturing Corporation Detroit, Michigan	September 5, 1945
Ainsworth Manufacturing Corporation Detroit, Michigan	July 14, 1947
Ainsworth Manufacturing Corporation Detroit, Michigan	July 14, 1947
All Lite Manufacturing Company Chicago, Illinois	November 2, 1945
Alside, Incorporated Akron, Ohio	July 27, 1947
American Cabinet Hardware Corp. Rockford, Illinois	May 2, 1947
American Radiator & Standard Sanitary Corporation Buffalo, New York	July 23, 1946
Arnold, Schwinn & Company Chicago, Illinois	October 2, 1947
Atlas Novelty Company Chicago, Illinois	August 8, 1945
Auto Specialty Manufacturing Company St. Joseph, Michigan	October 9, 1945
Auto Specialty Manufacturing Company Hartford, Michigan	October 9, 1945
Auto Specialty Manufacturing Company St. Joseph, Michigan	October 21, 1946

273

Balcrank, Inc. Cincinnati, Ohio	April 14, 1947
Barlow & Seelig Manufacturing Co. Ripon, Wisconsin	April 30, 1947
Barlow & Seelig Manufacturing Co. Ripon, Wisconsin	April 30, 1947
Bastian Blessing Company Chicago, Illinois	April 17, 1946
Blake Manufacturing Company Clinton, Massachusetts	October 5, 1945
The Brearley Company Rockford, Illinois	November 27, 1946
Burroughs Adding Machine Company Detroit, Michigan	December 19, 1947
Burroughs Adding Machine Company Detroit, Michigan	December 19, 1947
Burroughs Adding Machine Company Detroit, Michigan	December 19, 1947

Name of Licensee	Date of Agreement
California Parkerising Company Oakland, California	October 2, 1946
Carey-McFall Company Philadelphia, Pa.	June 14, 1946
Carey-McFall Company Montoursville, Pa.	September 4, 1946
Clarin Manufacturing Company Chicago, Illinois	February 26, 1946
274	
Clyde Porcelain Steel Corp. Clyde, Ohio	November 6, 1945
Clyde Porcelain Steel Corp. Clyde, Ohio	June 20, 1947
Columbia Mills, Inc. Saginaw, Michigan	November 25, 1946
Commonwealth Edison Chicago, Illinois	August 23, 1944
Consolidated Venetian Blind Co., Inc. Houston, Texas	November 27, 1945
Continental Scale Corp. Chicago, Illinois	October 3, 1947
Corona Corporation Jersey City, New Jersey	June 24, 1947
Day & Night Manufacturing Company Monrovia, California	July 30, 1946
Delco Products Division of GMC Dayton, Ohio	March 28, 1946
Delta Electric Company Marion, Indiana	September 18, 1946
Detroit Moulding Division of L. A. Young Spring & Wire Corp. Detroit, Michigan	October 30, 1945
Detroit Moulding Division of L. A. Young Spring & Wire Corp. Detroit, Michigan	May 7, 1947
275	
R. E. Dietz Manufacturing Company Syracuse, New York	September 14, 1945
J. E. Donaldson Manufacturing Co. North Kansas City, Missouri	August 27, 1946
Dusing & Hunt, Inc. Buffalo, New York	August 2, 1945
E. A. Laboratories, Inc. Brooklyn, New York	April 4, 1947
E. A. Laboratories, Inc. Brooklyn, New York	October 20, 1947
Eagle Manufacturing Company Wellsburg, West Virginia	April 23, 1947

Name of Licensee	Date of Agreement
Eastern Venetian Blind Company Baltimore, Maryland	March 9, 1946
Eastern Venetian Blind Company Baltimore, Maryland	December 11, 1947
Embury Manufacturing Company Warsaw, New York	November 16, 1945
Enameled Steel Sign Company Chicago, Illinois	February 24, 1945
Enameled Steel Sign Company Chicago, Illinois	May 10, 1946
Enameled Steel Sign Company Chicago, Illinois	June 2, 1947
Fisher Body-Ternstedt Division Detroit, Michigan	March 12, 1946
276	
Fisher Body-Ternstedt Division Detroit, Michigan	March 12, 1946
The Frick-Gallagher Manufacturing Co. Wellston, Ohio	September 5, 1947
Gabriel Company Cleveland, Ohio	January 16, 1946
Gate-Way, Inc. Los Angeles, California	June 6, 1947
General Electric Company Owensboro, Ky.	August 31, 1945
Geuder, Paeshke & Frey Company Lebanon, Indiana	July 18, 1947
Gabriel Company Cleveland, Ohio	September 7, 1945
Edwin F. Guth Company St. Louis, Missouri	September 22, 1947
Hamilton Manufacturing Company Columbus, Indiana	October 21, 1947
William H. Harman Corporation Wilmington, Delaware	July 23, 1947
William H. Harman Corporation Wilmington, Delaware	July 23, 1947
William H. Harman Corporation Wilmington, Delaware	July 23, 1947
M. M. Hedges Manufacturing Co. Chattanooga, Tennessee	September 19, 1946
277	
Hofmann Broom Works, Inc. Sinking Springs, Pa.	May 27, 1947
The Hoover Company No. Canton, Ohio	August 5, 1947
Hotstream Heater Company Cleveland, Ohio	November 1, 1947

Name of Licensee	Date of Agreement
Hotstream Heater Company Cleveland, Ohio	August 5, 1947
Houde Engineering Division of Houdaille-Hershey Corp. Buffalo, New York	June 7, 1947
Industrial Wire Cloth Products Wayne, Michigan	September 10, 1946
Inland Manufacturing Division General Motors Corporation Dayton, Ohio	August 9, 1945
International Business Machines Corp. Endicott, New York	January 5, 1945
Iron Fireman Manufacturing Company Cleveland, Ohio	November 28, 1945
The Ironrite Ironer Company Mt. Clemens, Michigan	November 3, 1947
The Ironrite Ironer Company Mt. Clemens, Michigan	November 3, 1947
Jamestown Metal Corporation Jamestown, New York	October 18, 1945
278	
The Japan Company Cleveland, Ohio	May 24, 1944
Kaywood Corporation Benton Harbor, Michigan	October 1, 1945
Keeler Brass Company Grand Rapids, Michigan	August 9, 1944
Frank I. King Los Angeles, California	November 17, 1945
Kingston-Conley Electric Company North Plainfield, N. J.	July 25, 1946
Kingston-Conley Electric Company North Plainfield, N. J.	June 30, 1947
Kingston-Conley Electric Company North Plainfield, N. J.	June 30, 1947
Kirsch Company Sturgis, Michigan	November 9, 1945
Kirsch Company Sturgis, Michigan	October 20, 1945
Kotler & Kopit, Inc. Pawtucket, Rhode Island	June 1, 1946
Landers Frary & Clark Company New Britain, Connecticut	August 7, 1944
Lennox Furnace Co. Machine & Tool Div. Lima, Ohio	September 30, 1947

279

Name of Licensee	Date of Agreement
Lennox Furnace Co. Machine & Tool Div. Lima, Ohio	September 30, 1947
Lennox Metal Mfg. Co., Inc. Maspeth, Long Island, N. Y.	October 4, 1947
Linmar Products Corporation Chicago, Illinois	December 30, 1946
Litecontrol Corporation Watertown, Mass.	March 25, 1947
Lloyd Manufacturing Company Menominee, Michigan	July 30, 1946
Macomber, Inc. Canton, Ohio	February 12, 1947
Manufacturers Enameling Company (formerly Auto Marine Mfg. Co.) Toledo, Ohio	September 27, 1945
Martin-Parry Corporation York, Pa.	July 1, 1946
Martin-Parry Corporation York, Pa.	July 1, 1946
Merriam Manufacturing Company Durham, Connecticut	January 18, 1945
Metal Office Furniture Co. Grand Rapids, Michigan	August 28, 1947
Miller Company Meriden, Connecticut	November 17, 1945

280-1

Miller Company Meriden, Connecticut	November 17, 1945
Mimar Products, Inc. El Monte, California	February 25, 1947
The Miro-Flex Company, Inc. Wichita, Kansas	March 18, 1947
Mission Appliance Corporation Los Angeles, California	May 21, 1946
Modern Venetian Blind New Bedford, Mass.	May 21, 1946
Motor Products Corporation Detroit, Michigan	May 16, 1947
Motor Products Corporation Detroit, Michigan	August 21, 1945
Motor Products Corporation Detroit, Michigan	August 15, 1944
Na-Ber Manufacturing Company Dallas, Texas	February 12, 1947
National Gas Equip. Company, Inc. (formerly Dallas Engineering Co.) Terrell, Texas	November 6, 1946

Name of Licensee	Date of Agreement
National Lock Company Rockford, Illinois	November 8, 1946
National Metal Products Company Carrollton, Texas	September 10, 1946
National Production Company Detroit, Michigan	July 19, 1945
282	
National Steel Construction Co. Seattle, Washington	November 7, 1947
National Tube Company Pittsburgh, Pa.	November 30, 1946
Norge Division of Borg-Warner Corp. Detroit, Michigan	July 24, 1945
Norquist Products, Inc. Jamestown, New York	July 1, 1947
Norris Stamping & Manufacturing Co. Los Angeles, California	September 10, 1947
Norris Stamping & Manufacturing Co. Los Angeles, California	September 10, 1947
Ohio Can & Crown Company Canton, Ohio	April 3, 1946
Peninsular Metal Products Corp. Detroit, Michigan	July 26, 1945
Peninsular Metal Products Corp. Detroit, Michigan	October 30, 1945
Peninsular Metal Products Corp. Detroit, Michigan	October 30, 1945
Peninsular Metal Products Corp. Detroit, Michigan	November 6, 1947
Peninsular Metal Products Corp. Detroit, Michigan	November 6, 1947
283	
Pennsylvania Range Boiler Company Philadelphia, Pa.	October 16, 1945
Pittsburgh Du Bois Company Rockwell Mfg. Co. Dubois, Pa.	October 21, 1946
Portland Manufacturing Co. Portland, Michigan	September 24, 1946
Progress Manufacturing Co., Inc. Philadelphia, Pa.	February 12, 1946
Radio Corporation of America Harrison, New Jersey	May 21, 1945
Radio Steel & Manufacturing Co. Chicago, Illinois	March 8, 1947
Reading Hardware Corporation Reading, Pa.	July 21, 1945
Rheem Manufacturing Company Sparrows Point, Md.	June 2, 1947

Name of Licensee	Date of Agreement
Rival Manufacturing Company Kansas City, Mo.	July 12, 1946
Russakov Can Company Chicago, Illinois	November 17, 1944
Security Manufacturing Company Kansas City, Mo.	July 11, 1947
Sheller Manufacturing Corporation Portland, Indiana	July 24, 1946
284	
A. L. Smith Iron Company Chelsea, Mass.	April 11, 1946
Steel Cooperage Company Detroit, Michigan	December 10, 1946
The Steelcraft Manufacturing Co. Cincinnati, Ohio	September 11, 1946
Steelcraft Manufacturing Co. Rossmoyne, Ohio	December 12, 1947
Stratton & Terstegge Company Manufacturing Division Louisville, Ky.	May 24, 1946
Sunbeau Heater Company Los Angeles, California	December 2, 1946
Sure-Heat Stove Company Dallas, Texas	November 1, 1946
Thompson Products, Inc. Cleveland, Ohio	February 28, 1946
Torrington Manufacturing Co. Torrington, Conn.	July 21, 1947
The Turner Brass Works Sycamore, Illinois	October 19, 1945
Union Steel Chest Corporation LeRoy, New York	April 3, 1946
U. S. Rubber Company Mishawaka, Indiana	April 26, 1946
285	
United Steel Barrel Company Philadelphia, Pa.	June 11, 1945
V-M Corporation Benton Harbor, Michigan	August 14, 1945
Venetian Manufacturing Company Baltimore, Md.	March 20, 1946
John C. Virden Company Cleveland, Ohio	July 7, 1945
E. R. Wagner Manufacturing Co. Milwaukee, Wisconsin	January 2, 1946
Waldes Koh-I-Noor, Inc. Long Island, New York	December 24, 1946

Name of Licensee	Date of Agreement
The Walker Manufacturing Company Racine, Wisconsin	May 11, 1945
The Walker Manufacturing Company Racine, Wisconsin	January 24, 1944
Waterloo Valve Spring Compressor Co. Waterloo, Iowa	October 2, 1946
The Weatherhead Company Cleveland, Ohio	May 1, 1946
The Weatherhead Company Houma, Louisiana	June 20, 1947
The Wheeler Insulated Wire Co., Inc. Bridgeport, Connecticut	February 13, 1947
Wheeling Steel Corporation Wheeling, West Va.	August 2, 1946
286	
Wheeling Steel Corporation Wheeling, West Virginia	August 2, 1946
Wheeling Steel Corporation Wheeling, West Virginia	February 17, 1944
Wheeling Steel Corporation Yorkville, Ohio	October 27, 1945
The White Motor Company Cleveland, Ohio	May 6, 1946
The White Motor Company Cleveland, Ohio	May 6, 1946
The Youngstown Sheet & Tube Co. Youngstown, Ohio	March 18, 1947

All of the foregoing are licenses granted by the Harper J. Ransburg Company and assigned to Ransburg Electro-Coating Corporation.

378 **Exhibit K.**

Identity of Licensee	Date	Terms
Westeel Products Ltd. Toronto, Canada	3/6/57	D-36
Motor Products Corp. Walkerville, Ont., Canada	8/20/47	Typed, attached as Exhibit K-1
	3/29/48	D-1
Office Specialty Mfg. Co., Ltd. Newmarket, Ont., Canada	1/ 7/50	D-5
Auto Specialties Mfg. Co. (Canada) Ltd. Windsor, Ont., Canada	9/11/56	D-36
Canadian Gen. Electric Co., Ltd. Barrie, Ont., Canada	3/13/58	D-27
Canadian Gen. Electric Co. Montreal, P. Q., Canada	5/29/56	D-35
Cooey Metal Prods. Ltd. Brighton, Ont., Canada	4/26/55	D-32
Curtis Lighting of Canada Leaside, Toronto, Canada	6/ 1/56	D-35
Dominion Foundries & Steel Ltd. Hamilton, Ont., Canada	3/15/54	D-13
Eastern Steel Prods. Ltd. Toronto, Canada	1/27/55	D-32
Electrolier Mfg. Co. Ltd. Montreal 10, Canada	5/21/57	D-36
Electrolux (Canada) Ltd. Montreal, P. Q., Canada	1/13/58	D-36
Fairgrieve & Son Toronto, Ont., Canada	8/31/48	Typed, attached as Exhibit K-2
Machine Prods. Corp. Montreal, Quebec, Canada	8/ 5/57	D-36
Outboard Marine Corp. of Canada, Ltd. Peterborough, Ont., Canada	9/ 6/57	D-36
Rest Glow Mfg. Co. Ltd. Town of Mt. Royal Montreal, P. Q., Canada	7/24/56	D-36
Sunbeam Corp. (Canada) Ltd. Toronto 18, Canada	4/26/55	D-32

379

Steel Co. of Canada Ltd. Hamilton, Ontario, Canada	8/22/47	Typed, attached as Exhibit K-3
Federal Pacific Mfg. Co. Ltd. Toronto, Ont., Canada	2/24/58	D-36

740 **Exhibit M.**

List of Defendant's agreements presently known to Defendant under which articles were painted for the United States government, showing name of customer, agreement number, and articles to be painted under agreement. Supplied in answer to Plaintiff's Interrogatory No. 190 (b) and (c).

Customer	Agreement No.	Articles
Baxter Metal Products, Inc.	4040	Army and Navy Lockers
Interstate Metal Products, Inc.	4027	Metal Chairs for Army Air Forces
Butler Manufacturing Co.	3988	Roofing, Siding, etc. for Navy Utility Steel Buildings
Chromcraft Div., American Fixtures & Mfg. Co.	4107	Metal Chairs for Army and Air Forces
Aluminum Goods Mfg. Co.	4202	3" 50-caliber Cartridge Tanks for Navy
C. A. Dunham Mfg. Co.	4064	155-mm High Explosive Shells
Industrial Lamp Corp.	4364	Military Black-Out Lamps
Van Brody Milling, Inc.	5681	Metal Food Packs
Thomas Industries, Inc.	5585	Shell Cases
U. S. Defense Corp.	6469 4527	
	4648 5107	Ammunition Packing Cans
Twin Cities Arsenal	3843 4026	
	4361 4526	Ammunition Packing Cans
Screw Machine Products	4245	Projectiles
	5267	Grenades
Russakov Can Co.	3787	Blitz Cans
	4060 4322	Ammunition Packing Cans
Olin-Mathieson Chemical Corp.	3929	Ammunition Packing Cans
	3947	Cartridge Cans

REQUEST FOR ADMISSIONS AND ANSWERS.

1

Request for Admissions	Answer
1. That Defendant does not sell electrostatic spray coating systems or components thereof in the United States.	1. Admitted.
2. That Defendant has never licensed for commercial use any airless electrostatic spray coating system employing non-rotating applicator head identical or substantially identical to the applicator heads shown in the drawings of the Starkey and Ransburg Patent No. 2,685,536 in suit.	2. Admitted.
3. That the first license granted by Defendant on an airless electrostatic spray coating system was granted on March 21, 1949.	3. Admitted.
5. That the Defendant has never issued a license in the United States for the manufacture of electrostatic spray coating systems by such licensee,	5. Admitted.
7. That electrical power packs, containers for liquid or paint, electrical wiring, and conduits for conveying liquid are available on the open market.	7. Admitted, except that no electrical power packs then available on the open market were deemed by Defendant's predecessor free from danger when used for electrostatic spray painting.
8. That the airless electrostatic coating system used by Plaintiff, the use of which is alleged to infringe the patent in suit comprises at least these elements: (1) an electrical power pack (2) a liquid emitter or sprayer of the type shown in Plaintiff's drawing SK-661 (Exhibit E) (3) a container for supplying coating liquid to be applied (4) electrical wiring connecting the emitter to the power pack for energizing the emitter and (5) conduit for directing liquid from the container to the emitter.	8. Admitted.
9. That the acts of Plaintiff alleged to infringe are (1) the use of the emitter or sprayer shown in Plaintiff's drawing SK-661 (Exhibit E) for airless electrostatic coating in Plaintiff's plant and	9. (1) Admitted.
(2) the Plaintiff's offer of sale of airless electrostatic spray coating systems to Ford Motor Company.	(2) Denied.

2

Request for Admissions	Answer
10. That Defendant notified Plaintiff that Plaintiff should not sell its emitter or sprayer shown in Plaintiff's Drawing SK-661 (Exhibit E) for electrostatic coating to any party who was not a licensee of Defendant.	10. Admitted.
11. That Defendant is presently charging with patent infringement each known supplier who has offered airless electrostatic spray coating systems for sale in the United States.	11. Other than the instant case, Defendant has charged with patent infringement one supplier in the United States of airless electrostatic spray coating systems, and knows of no other such supplier; otherwise denied.
13. That the Defendant has refused and still refuses to license the Plaintiff to supply Plaintiff's airless electrostatic spray coating emitter of the type shown in Plaintiff's Drawing SK-661 (Exhibit E) to the trade unless Defendant receives fees based at least in part upon the amount of coating material sprayed by such emitter or sprayer.	13. Defendant admits that it has refused to license the Plaintiff to supply its emitter SK-661 for electrostatic spray painting to persons other than Defendant's licensees, but denies the balance of request #13.
14. That an initial act of conception in connection with the subject matter of the Starkey and Ransburg patent in suit was the observation by Starkey of the behavior of a wet paint brush in an electrostatic field.	14. Admitted.
15. That prior to this suit Defendant's personnel in successfully leasing Defendant's airless electrostatic spray coating system, represented to the customer in writing, as follows: "For your information, our equipment is not available on the open market and whereas you could fabricate this equipment it would cost thousands of dollars to manufacture and you would not be guaranteed its functioning properly."	15. Defendant admits that one of Defendant's sales personnel wrote a letter on March 23, 1954, containing the quoted statement; otherwise denied.

Request for Admissions	Answer
16. That Defendant's personnel have failed to advise all prospective licensees of Defendant for airless electrostatic spray coating systems that licenses might be available under which such licensees would not be obligated to take equipment from Defendant.	16. Defendant admits that prior to the middle of 1953, some prospective licensees might not have been advised that licenses were available without equipment, but Defendant believes that since that time all prospective licensees have in some manner been advised by Defendant that licenses were available from Defendant without Defendant's equipment; otherwise denied.
17. That defendant has issued in excess of three hundred licenses in the field of airless electrostatic spray coating, and in each instance, the license provided for Defendant leasing equipment under each such license.	17. Admitted.
18. That as of the date of the filing of the Complaint in this cause, Defendant had licenses outstanding containing the following provision: "Future Inventions: User agrees that in the event User acquires, from any source, any inventions, improvements, or letters patent, domestic or foreign, relating to methods and/or apparatus involving the electrostatic atomization of liquids, Ransburg shall have with respect to coating apparatus and methods employing said inventions, improvements, and the subject matter of said letters patent, a royalty-free, non-exclusive, assignable license, with right to sub-license, such license to be irrevocable except upon voluntary surrender by Ransburg. Patents subject to Ransburg's rights under this paragraph shall include only patents acquired by User during the term of this agreement, patents acquired by User within two years following termination of this agreement, and patents whenever acquired by User which cover inventions and improvements made within the term of this agreement or within two years following its termination."	18. Admitted.
19. That as of the date of the filing of the Complaint in this cause, Defendant had licenses outstanding containing the following provision: "Future Inventions: User agrees that in the event User acquires from any source, any inventions, improvements, or letters patent,	19. Admitted.

4

Request for Admissions	Answer
19. (cont'd) domestic or foreign, comprehending subject matter usable in any way in connection with methods or apparatus for the electrostatic atomization of liquids or for coating with electrostatically atomized liquids, Ransburg shall have with respect to coating methods and apparatus employing said inventions, improvements, and the subject matter of said letters patent, a royalty-free non-exclusive, assignable license, with right to sub-license, such license to be irrevocable except upon voluntary surrender by Ransburg. Patents subject to Ransburg's rights under this paragraph shall include only patents acquired by User during the term of this agreement, patents acquired by User within two years following termination of this agreement, and patents whenever acquired by User which cover inventions and improvements made within the term of this agreement or within two years following its termination."	19. (cont'd)
21. That in response to a canvass of Defendant's licensees conducted by Defendant on or about May 27, 1953 and July 15, 1953, purportedly offering such licensees an opportunity to return Defendant's equipment and operate under a license wherein Defendant would not supply equipment, at least one such licensee termed the purported offer "ridiculous."	21. Defendant admits that between May and July, 1953, it notified all of its then licensees in writing that licenses were available from Ransburg without Ransburg equipment, and that a sales representative of Ransburg reported that one licensee had characterized the offer as a "ridiculous proposition": otherwise denied.
22. That Defendant's distributor in licensing efforts for the Defendant, reported on such efforts as follows: "Emphasis was placed on the fact that even if the patents were worthless, that we could get the system into profitable operation enough quicker than any other way of handling, that this differential speed was worth the price we were charging, i.e. at $1,000,000, saving per year, 3 month delay would be worth $250,000."	22. Defendant admits that the quoted statement is an excerpt from a communication dated March 11, 1949 from a distributor relating to the No. 1 Compressed Air Atomized Spray Process: otherwise denied.

5

Request for Admissions	Answer
25. Does the defendant admit that in connection with its earlier application, Serial Number 556,390, from which its process Patent No. 2,685,536 issued, no requirement for division as between process and apparatus claims was ever made by the Patent Office?	25 Yes.
26. Does the defendant admit that following the decision of the Patent Office Board of Appeals dated December 18, 1953, in connection with the earlier application Serial Number 556,390 from which process patent No. 2,685,536 issued, it cancelled all of its apparatus claims from said application on January 27, 1954, without the Patent Office having made any requirement for division?	26. Yes.
27. Does the defendant admit that Claim 4 of its apparatus patent No. 2,794,417 (which is the only claim of that patent specifically identified in the Counterclaim as being infringed) is based on the same disclosure of an airless electrostatic sprayer apparatus as were the apparatus claims 63, 65, 87, 95 that were cancelled from the earlier application, Serial Number 556,390?	27. Yes, to the extent that "same disclosure" means the specification and drawings considered as a whole. However, said cancelled claims 63, 65, 87 and 95 cover portions of such disclosure which are outside the scope of claim 4 of patent No. 2,794,417.
28. Between January 27, 1954 and June 4, 1954, does the defendant admit that it did not have pending in the Patent Office any claims on apparatus for airless electrostatic sprayer apparatus based on the disclosures of either of its process or apparatus patents Nos. 2,685,536 and 2,794,417 in suit?	28. Yes.
29. Does the defendant admit that as between January 27, 1954, and June 4, 1954, it did not have pending in the United States Patent Office any apparatus claims on an electrostatic airless sprayer apparatus	29.
(a) of a scope comparable to that of Claim 4 of its apparatus patent No. 2,794,417, or	(a) Yes.
(b) of a scope which it considered applicable to plaintiff's SK-661 emitter apparatus?	(b) No.

6

Request for Admissions	Answer
30. Does the defendant admit that it has never commercialized by sale or lease any electrostatic sprayer apparatus of the structure shown in any one of the figures of either its earlier process patent 2,685,536 or of its later apparatus patent No. 2,794,417?	30. Yes.
31. Does the defendant admit that the following statement, "as illustrated in the drawings the needles are sufficiently close together as to cause the coating material to bridge the spaces therebetween", was added by Amendment "C", filed August 23, 1956, to the original text of the application of its apparatus patent No. 2,794,417?	31. Yes.
32. Does the defendant admit that prior to August 23, 1956, neither the specification of the application of its process patent No. 2,685,536 nor the specification of the application of its apparatus patent No. 2,794,417, during their pendency in the Patent Office, described needles or points as being "sufficiently close as to cause coating material to bridge the spaces therebetween"?	32. No, but defendant admits that prior to August 21, 1956, the specification of the application of neither its patent No. 2,685,536 nor its patent No. 2,794,417 contained the specific words, "sufficiently close as to cause coating material to bridge the spaces therebetween".
33. Does the defendant admit that at the time it and its counsel prepare and file Amendment "C", filed August 23, 1956, in its application from which apparatus patent 2,794,417 issued on June 4, 1957, said counsel prepared such amendment with knowledge of plaintiff's airless electrostatic apparatus submitted to defendant in a letter dated July 23, 1956, identified in the Complaint hereof?	33. Defendant denies that at the time of the original preparation of Claim 18 of Amendment "C" its counsel had knowledge of plaintiff's airless electrostatic apparatus submitted to defendant in a letter dated July 25, 1956, identified in the complaint herein, but admits that at the time of the completion of the preparation and filing of said amendment, said counsel had knowledge of the drawing of plaintiff's sprayer designated SK-661, which had been transmitted to defendant by the plaintiff in said letter.
34. Does the defendant admit that as far as its charges of infringement in this case are concerned, none of plaintiff's spraying devices charged to be infringements employ any spaced mechanical elements in the tangible form of either needles or points?	34. Yes.

7

Request for Admissions	Answer
36. Does the defendant admit that in the case of each of the applicators or emitter heads illustrated in the drawings of both of its two patents in suit, there is provided in every instance mechanical structure either in the form of edges of spaced openings, spaced needle points or spaced strands of wire, for defining spaces through which droplets of liquid material emerge from the head?	36. No, however defendant admits that in every instance mechanical structure is provided for defining spaces through which liquid material emerges.
37. Does the defendant admit that it has never commercialized an electrostatic airless spraying apparatus with an applicator or emitter using (a) spaced needles, (b) spaced wires, or (c) mechanically spaced droplet holes?	37. Yes.
38. Does the defendant admit that (a) during the period of five (5) years preceding this suit it, in connection with its licensing program, charged initial fees of $5,000.00 to $40,000.00 and (b)	38. (a) Yes. (b) .....
41. Does the defendant admit that prior to the issuance of its process patent No. 2,685,536, as far as is known to defendant, it was the sole manufacturer and supplier in this country of airless electrostatic spraying systems?	41. Yes.
42. Does the defendant admit that after the issuance of its process patent 2,685,536, as far as defendant knows, it continued to be the sole manufacturer and supplier of airless electrostatic spraying systems with the exception of the system made by the plaintiff here in suit and the electrostatic spray coating system charged to be an infringement of said patent in the pending patent infringement and antitrust suit in Baltimore entitled Ransburg Electro-Coating Corp. *vs.* Proctor Electric Co., Inc. and Ionic Electrostatic Corp., C. A. 10181?	42. Yes.

8

Request for Admissions	Answer
44. Does the defendant admit that in its licensing of airless electrostatic spraying systems, it in each instance prepared the license and lease and submitted them to the licensee?	44. Yes.
45. Does the defendant admit that in the case of its printed licensing and leasing forms previously identified herein, such forms were printed by or for the defendant (a) and submitted generally to prospective licensees, and (b) not for or on behalf of any particular licensee?	45. Yes.
46. Does the defendant admit that it is presently attempting to enjoin the manufacture and sale of all competitive airless electrostatic spraying systems on the market known to defendant?	46. Yes.
47. Does the defendant admit that it commenced the suit in Baltimore, Maryland, entitled Ransburg Electro-Coating Corp. *vs.* Proctor Electric Co., Inc. and Ionic Electrostatic Corp., charging infringement of the process patent 2,685,536, after it had acquired knowledge of Zeleny's articles, of record herein?	47. Yes.
48. Does the defendant admit that as a part of its licensing program in connection with airless electrostatic spraying systems (a) it did, as exemplified by certain printed forms of licenses, require licensees to transfer to defendant patent rights relating to such systems and (b) that licenses with such conditions are still in force and effect?	48. (a) and (b) No, but Defendant admits that some of its agreement forms contained a provision whereby the licensee agreed to grant defendant a royalty-free non-exclusive license, with right to sub-license, respecting airless electrostatic spray coating, some of which agreements are still in effect.
51. Does the defendant admit that as far as it knows there are no second-hand dealers in the United States handling electrostatic airless spray coating systems?	51. Yes.
52. Does the defendant admit that as far as it knows there is no servicing organization in the United States outside of itself for servicing its so-called No. 2 airless electrostatic coating system?	52. Yes.

Request for Admissions	Answer
53. Does the defendant admit that under its licensing and leasing agreements with its existing licensees, it is obligated to furnish replacement parts on equipment that it furnishes such licensee?	53. Yes, subject to conditions specified in the agreement.
54. Does the defendant admit that in connection with its licensing and leasing program on airless electrostatic spraying systems it usually, as a part of the fees received by it, for the most part supplies the majority of replacement parts on the equipment furnished by the defendant to its licensees?	54. Yes.
56. Does the defendant admit that in granting licenses, licensees have not only been given the benefit of operating under the patents taken out by the defendant, but also under other patent rights acquired from third parties?	56. Yes, in such cases as such rights were applicable.
57. Does the defendant admit that in its licensing program on electrostatic spraying systems it has for the most part used printed forms of licenses which do not single out any particular patents, by number, of those in the portfolio of the defendant?	57. Yes.
58. Does the defendant admit that in no instance where it has acquired patent rights from other parties has any of such parties gone into competition with the defendant in the electrostatic liquid spraying field?	58. Yes.
9	
60. For the purpose of this law suit, does the defendant admit (as testified to by Dr. Emery P. Miller, R. 42 to 44)	60.
(a) that airless electrostatic detearing was used commercially before the making of the alleged Starkey et al invention of patent 2,685,536 in suit and	(a) Yes.
(b)	(b) .....
61. For the purpose of this law suit does the defendant admit that	61.

Request for Admissions	Answer
(a) airless electrostatic detearing was in public or commercial use more than one year prior to the original filing date, September 29, 1944, of the Starkey et al letters patent in suit, and	(a) Yes.
(b) that according to such detearing excess liquid on the previously coated given object was atomized, dispersed and deposited in liquid form on another object such as a grid?	(b) No, but incidental to the removal of excess material from coated articles by electrostatic detearing, on occasion some atomization, dispersion, and deposition of the material upon the apparatus and floor occurred sporadically and momentarily.
62. For the purpose of this law suit and in connection with defendant's previous admission 14 as to its use of a wet paint brush, does the defendant admit that when the paint brush was disposed in an electrostatic field, it emitted liquid paint which was atomized, dispersed and deposited on an article such as paper?	62. No. However, defendant admits that when the paint brush was effectively arranged as one terminus of the electrostatic field and the article was effectively arranged as the other terminus of the field, liquid paint was atomized from the brush and the atomized particles were dispersed and deposited on the article.
63. Does the defendant admit with regard to its original paper exhibit (PX-B) used in connection with the initial paint brush inception of the alleged Starkey et al invention, the paint that was applied to the paper was electrostatically atomized, dispersed and deposited on the paper?	63. Yes.
64. Does the defendant admit as to both of its two Starkey et al patents in suit, 2,695,596 and 2,794,477, that the earliest act of conception that will rely upon herein is the paint brush activity commencing on or about October 8, 1943, and documented in a notebook as of October 29, 1943, with the following notation, "Al Starkey suggested using the detearing action from the bottom of a brush as the atomizing agent to spray items passing under this arrangement"?	64. Yes.

10

Request for Admissions	Answer
65. Does the defendant admit for the purpose of this law suit (as testified to by Dr. Emery P. Miller, R. 154) that (a) in the use of its so-called air type No. 1 electrostatic coating system, such system had been tried and operated with a "jet of liquid adjacent the high potential electrodes in the area of the corona discharge" and (b) "and with the result that the material atomised off the device"?	65. No, but Dr. Emery P. Miller observed that, upon shutting off the operation of the air type No. 1 electrostatic coating system, when the flow of compressed air from the air spray gun ceased before the flow of paint ceased, a jet of liquid paint was momentarily discharged adjacent the high potential electrodes in the area of the corona discharge, with the result that some atomization occurred.
66. Does the defendant admit for the purpose of this law suit (as testified to by Dr. Emery P. Miller, R. 126) that liquid that is atomized in an electrostatic field is of necessity also dispersed?	66. Yes.
68. Does the defendant admit that (a) its so-called No. 1 or air type electrostatic coating system is prior art with reference to both of the patents in suit and (b)	68. (a) Yes. (b) .....
69. Does the defendant admit that its airless No. 2 electrostatic coating system has been used for spraying liquid materials in which (a) paint, (b) ..... (c) ..... (d) ..... (e) ..... (f) alcohol containing coating materials, or (g) water containing coating materials is included?	69. (a) Yes. (b) ..... (c) ..... (d) ..... (e) ..... (f) Yes. (g) Yes.

11

Request for Admissions	Answer
71. Does the defendant admit that in granting its licenses in the airless electrostatic coating field (a) it has not only granted licenses under its letters patent in suit, but has also joined with such licenses leases for equipment furnished by the defendant and (b) has at all times maintained title to all equipment it has furnished its licensees under its agreements with them and (c) in no case prior to the filing of this suit has it ever actually granted a license without the license being accompanied by a lease of equipment?	71. (a) Yes. (b) Yes. (c) Yes.
72. Does the defendant admit that it was a party plaintiff in a suit brought in the district court of the District of Columbia under 35 U. S. C. 145, formerly known as Section 4915 of the Revised Statutes, to adjudge Emery P. Miller as being entitled to receive a patent on an application, Serial Number 626,631, filed on November 5, 1945, and which case was decided adversely to defendant on March 2, 1955, in 129 F. Supp. 241, affirmed at 229 F. 2d 21?	72 Yes.
73. Does the defendant admit that its licensing program with respect to the use of an electrostatic field in the dispersing and depositing of an oil coating was urged as part of its commercial success picture in the aforesaid law suit, *Miller* v. *Weeks*, No. 1730-53, 129 F. Supp. 241?	73. No, but Defendant admits that it relied upon its oil-coating licenses as evidence of commercial success in such suit.
74. Does the defendant admit at the time of the pendency of the *Miller* v. *Weeks* suit (129 F. Supp. 241) that as to the three prior reference patents in suit referred to in the court's decision it had a license under the Wintermute patent 2,221,338 and owned the other two patents, namely the Pugh patent 1,855,869 and the Ransburg patent 2,334,648?	74. No, but defendant admits that, at the time of the pendency of the *Miller* v. *Weeks* suit (129 F. Supp. 241), of the three prior reference patents referred to in the court's decision, defendant had a license under the Wintermute patent 2,221,338 and owned the Ransburg Patent 2,334,648, the Pugh Patent 1,855,869 having previously expired.
75. Does the defendant admit for the purpose of this law suit that the electrostatic deposition process of its patent 2,685,536 can be used for the atomization, dispersion and deposition of a lubricant or oil coating on an article?	75. No, but defendant admits that the process of its patent 2,685,536 can be used for the atomization, dispersion, and deposition of a lubricant or oil coating on an article.

12

Request for Admissions	Answer
79. (a) The William A. Starkey et al application Serial No. 556,390 referred to in the E. M. Ransburg patent No. 2,658,009, which was issued November 3, 1953 from an application filed May 13, 1948, and was entitled "Electrostatic Coating Method and Apparatus", is the same parent application from which both of the Starkey et al patents Nos. 2,685,536 and 2,794,417 in suit were based, and	79. (a) Admitted.
(b) the process of said Ransburg Patent No. 2,658,009 is dominated by claims in suit of the Starkey process Patent No. 2,685,536, and	(b) Defendant admits that certain aspects of the process of said Ransburg Patent No. 2,658,009 are regarded by Defendant as dominated by claims in suit of the Starkey Process Patent No. 2,685,536; otherwise denied.
(c) the apparatus disclosed in said Ransburg Patent No. 2,658,009 is dominated by Claim 4 of the Starkey apparatus Patent 2,794,417 in suit.	(c) Defendant admits that certain features of one form of apparatus disclosed in said Ransburg Patent No. 2,658,009 are regarded by Defendant as dominated by Claim 4 of the Starkey Apparatus Patent No. 2,794,417 in suit; otherwise denied.
80. (a) The specific apparatus for electrostatic coating shown in the drawings of the Ransburg Patent No. 2,658,009 making use of a secondary electrostatic field between the jet propelling nozzle and the article has never been commercialized by the defendant,	80. (a) Defendant admits that it has never commercialized any apparatus exactly corresponding to any specifically disclosed in the Ransburg Patent No. 2,658,009; otherwise denied.
(b) but the defendant has commercialized the "general process" of the Ransburg patent 2,658,009 in its licensing and leasing of its No. 2 airless electrostatic coating system.	(b) Defendant has commercialized the process of Patent No. 2,658,009 to the extent that certain of its customers use a secondary electrostatic field to shape the spray; otherwise denied.
81. (a) Defendant received a letter dated December 17, 1952, from the American Wringer Company of Woonsocket, Rhode Island reading as follows:	81. (a) Admitted.
"Ransburg Company Indianapolis, Indiana Gentlemen: We understand that you are connected with an electrostatic painting process, and we are much interested to know if such process or equipment would be serviceable to us in the cotton flocking of latex dipped products.	

Request for Admissions	Answer
81. (cont'd)	81. (cont'd)
Our product requires a reasonably heavy evenly distributed coating of flock applied while the latex is wet and in such manner as it will not wash off or rub off. Please tell us what you may have to offer for such purposes, Yours truly," and	
(b) defendant replied to such letter in a letter dated December 29, 1952, reading as follows:	(b) Admitted.
"American Wringer Co., Inc. Woonsocket, Rhode Island Gentlemen: We have your letter of December 17 requesting information concerning the possibility of our being of help to you in the application of cotton flocking to latex dipped products. Our experience in this field has been extremely limited and therefore we would like to refer you to the Behr-Manning Corporation of Troy, New York, whose experience in this field has been very extensive. I believe they are in a position to advise you concerning the possibility of carrying out your operation with the use of electrostatic fields. I am certain that Mr. John Amstus of the Behr-Manning Corporation would be most happy to discuss your particular application with you. Very truly yours, Ransburg Electro-Coating Corp. Emery P. Miller EPM:ch CC: Mr. John Amstus Behr-Manning Corporation"	

14

Request for Admissions	Answer
82.	82.
(a) Defendant received a letter dated February 10, 1955 from the Dewey and Almy Chemical Company of Cambridge, Massachusetts, reading as follows:	(a) Admitted.
"Ransburg Electro-Coating Corporation 1204 Barth Avenue Indianapolis, Indiana Gentlemen: We understand that you manufacture equipment for charging drums electrostatically to be used with a floc spraying process in coating materials. Could you send us your literature on the equipment and whatever else you may have on the floc spraying process. We have an application which we are considering for use on this process and are interested in what you may have. Very truly yours, D. A. Trageser" and	
(b) defendant replied to such letter in a letter dated February 15, 1955 reading as follows:	(b) Admitted.
"Dewey and Almy Chemical Company Div. of M. R. Grace & Co. Cambridge 40, Massachusetts Gentlemen: We have your letter of February 10 and wish to thank you for your interest in electrostatic spraying. The application of flock with electrostatic methods is somewhat out of our field since we are primarily interested in the application of liquid coating material such as paints, lacquers, enamels, etc. The field of flock coating electrostatically has been quite fully and completely developed by the Behr-Manning Corporation of Troy, New York. I would like to suggest that you contact them concerning your problems. Mr. John Amstus of that company would be pleased to discuss these matters with you. Very truly yours, Emery P. Miller"	

15

Request for Admissions

83. The first contact the defendant had with Behr-Manning Corporation leading up to its cross-license with that company was in a letter dated November 22, 1940 from Behr-Manning to the defendant, reading as follows:

"November 22, 1940

Mr. Harper J. Ransburg
Harper J. Ransburg Company,
Indianapolis, Indiana

Dear Mr. Ransburg:

From several sources, it has come to our attention that your company has been interested in developing an electrostatic method for depositing paint in a finely divided or suspended particle form on irregularly shaped objects. For many years, Behr-Manning has been employing the electrostatic method to deposit finely divided material of all types and I am writing to you because of our apparent interest in the same development.

We have been manufacturing sandpaper made by the electrostatic process since 1926 and our developmental work of course preceded this date. From the propulsion of abrasive particles, we moved into new fields involving the deposition of finely divided or suspended particles and during the past few years, we have successfully developed electro-coated pile fabrics for use as automobile upholstery, dress material, etc. Many of our operations have been covered by patents some of which you probably may have seen and many patent applications are pending. We have been interested in the field in which you apparently are working and have done developmental work, namely, the electrodeposition of paint or other liquids and some of our patent coverage is directed to this art.

It has occurred to us that it would not be amiss to arrange for a meeting either in Indianapolis or Troy at the convenience of both parties to discuss our individual interests and positions in the electrostatic deposition field. We will be glad to have representatives visit you in Indianapolis on a mutually satisfactory date or we will be pleased to see you here if you prefer. Will you kindly let us have your reaction to our proposal.

Yours very truly,
Behr-Manning Corporation
E. C. Schacht
Vice President"

Answer

83. Defendant admits that the fi
contact either it or its predeces
had with Behr-Manning Corp. w
the letter dated November 23, 19
otherwise denied.

16

Request for Admissions	Answer
84. (a) Beginning around March 21, 1949, and for several years thereafter, defendant leased and licensed its No. 2 airless electrostatic coating system without having *issued* to it any letters patent affording the defendant exclusive patent rights as to airless electrostatic spray coating, and	84. (a) Admitted.
(b) defendant in its leasing and licensing of the No. 2 system during *said several year period*, included in every instance in its printed form of an agreement a provision that the lessee was being licensed under letters patent or patent applications of the defendant, and	(b) Admitted.
(c) during that period of several years, defendant in no instance notified any lessee and licensee in writing that the defendant had no letters patent affording it any exclusive rights on the airless No. 2 system.	(c) Denied.
85. (a) That as far as defendant knows, as of on or about July 15, 1953, there was no airless electrostatic spray coating system on the market outside of those being marketed by defendant, and	85. (a) Admitted.
(b) the only source, as far as defendant knew, for such systems was the defendant.	(b) Admitted.
86. (a) Initially when defendant granted its first license in both typed and printed form on its No. 2, or airless electrostatic system, defendant had no *issued patent* disclosing or claiming *airless* electrostatic spray coating, and	86. (a) Admitted.
(b)	(b) .....
87. (a) Defendant (in further regard to the subject of the foregoing Request No. 86) did at the time of the granting of its initial licenses (both typed and printed) purposely include the aforesaid terms "letters patent of the United States" (or the equivalent thereof) even though defendant then had no United States letters patent issued covering or claiming *airless* electrostatic spray coating, and	87. (a) Admitted.
(b)	(b) .....

17.

Request for Admissions	Answer
88.	88.
(a) Defendant has never leased any of its airless electrostatic spray coating equipment without at the same time granting a license under its patents and	(a) Defendant admits that it has never leased any of its airless electrostatic spray coating equipment without at the same time granting, at least by implication, license under its patents to use the leased equipment in accordance with the terms of the contract with the customer; otherwise denied.
(b)	(b) .....
89.	89.
(a) Defendant on January 18, 1954, wrote a letter to the Avco Manufacturing Corp. comprising a part of its leasing and licensing agreement No. 5228 with Avco for airless electrostatic deposition of liquid, and	(a) Admitted.
(b) included in said agreement Exhibit A comprising a list of patents and patent applications which Defendant owned and Exhibit B comprising a list of patents and application as to which Defendant had the right to grant licenses, and	(b) Admitted.
(c) that the majority of such patents so listed did not disclose or claim *airless* electrostatic atomization of liquid particles, and	(c) Admitted.
(d) such majority in reality related for the most part to air type electrostatic spraying.	(d) Defendant admits that the majority of patents listed in said Exhibits A and B related to processes in which the particles deposited were formed otherwise than by electrostatic atomization; otherwise denied.
90.	90.
(a) That of the thirty-six patents listed in Exhibit A embodied in defendant's agreement of January 18, 1954, comprising part of its airless electrostatic coating agreement No. 5228 with Avco Manufacturing Corp., only four, namely Turner Patent No. 2,651,287 and Crouse Patent No. 2,568,611, Ransburg patents Nos. 2,658,009 and 2,658,472, disclosed or claimed *airless* electrostatic spraying of liquid, and	(a) Admitted.
(b) none of those patents covered the No. 2 system leased and licensed to Avco Manufacturing Corp.	(b) Admitted.

18

Request for Admissions	Answer
91. Defendant entered into licensing and leasing agreements as to its electrostatic airless or No. 2 system with Enameled Steel and Sign Company of Chicago, Illinois (No. 3448) as of March 21, 1949, and with Eastern Venetian Blind Company of Baltimore, Maryland (No. 3530) as of June 14, 1949,	91.
(a) in each of which agreements the licensee or user was given a patent license to use Defendant's Process, with the express provision "but said right shall not include the use of said Process in the manufacture of abrasive articles, flock-coated articles or articles coated with fiber shaped particles", and	(a) Admitted.
(b) that as far as is known to defendant, the equipment furnished under the aforesaid two agreements was not used "in the manufacture of abrasive articles, flock-coated articles or articles coated with fiber shaped particles", and	(b) Admitted.
(c) at least in the case of the user Enameled Steel and Sign Company, such user was apprised of the fact that defendant was making such exclusion because of its agreement with Behr-Manning Corporation.	(c) Denied.
94.	94.
(a) As far as known by the defendant, at least since the execution of its predecessor's agreement dated September 26, 1944 with Behr-Manning Corporation, it has never experienced any competition by that company in the field of electrostatic spray coating of liquid particles and	(a) Defendant admits that to the best of its knowledge Behr-Manning Corporation has never attempted to market any system involving electrostatic coating with liquid particles; otherwise denied.
(b)	(b) .....
97.	97.
(a) The figure of forty percent of the initial leasing fee for a patent license without equipment set forth in the third paragraph of defendant's "Pricing Guide for No. 2 Process", dated July 15, 1953, was not dependent upon or varied by the number of patents or patent applications applicable to the equipment to be licensed, and	(a) Admitted.

19

Request for Admissions	Answer
97. (cont'd) (b) such figure was arrived at by management of defendant with the intention that it might be uniformly used by salesmen in future contacts with customers regardless of specific requirements of customers for the No. 2 system.	97. (cont'd) (b) Admitted to the extent indicated in the pricing guide; otherwise denied.
99. In the license agreement entered into by defendant with Research Corporation of New York on October 7, 1948, in which the defendant obtained a license to manufacture, use and sell apparatus embodying the inventions of patents Nos. 2,097,233 and 2,221,338 and to sublicense others to use the methods of said patents and to use and sell, but not to manufacture the apparatus of said patents; it was specifically provided that the license granted defendant "does not include use of any such invention in connection with flock deposition, flock-coated material or in the manufacture of abrasives and coated abrasives."	99. Admitted.
101. (a) In the negotiation for the license agreement dated October 7, 1948 between Research Corporation of New York and the defendant, a revised draft of the agreement was submitted to defendant's counsel by Research Corporation in a letter dated August 23, 1948, and wherein Paragraph 3 (c) of the agreement setting forth the license right given to defendant and the right to sublicense was modified to include the following: "• • • *provided nevertheless*, that such right shall be limited to apparatus employing one or more of the inventions of the Licensed Patents in the electrostatic deposition of liquid materials and shall specifically preclude any use in connection with flock-deposition, flock-coated material, or the manufacture of abrasives and coated abrasives." and	101. (a) Admitted.
(b) such agreement was executed with said quoted provision, and	(b) Admitted.

Request for Admissions	Answer
102.	102.
(c) defendant after the execution of said agreement did not violate the requirements of the aforesaid quoted provision.	(c) Defendant admits that it has not engaged, and has not purported to license any other to engage, in flock-deposition, or the manufacture of any flock-coated material, abrasives, or coated abrasives under the patents which were the subject of its contract with Research Corporation; but Defendant otherwise denies section (c) of Request No. 101, and specifically denies that its contract with Research Corporation expressed any commitment limiting its activities.
20	
(a) In the negotiations by the defendant's predecessor with Behr-Manning Corporation leading up to the agreement of September 26, 1944, the Ransburg Company, as of August 8, 1944, made the following representation to Behr-Manning Corporation:	(a) Admitted.
"Patent No. 2,270,341 is the one to which we referred as possibly interesting to you in the abrasive (pileous fabric field, or at least one in which you could contribute materially in the composition cork industry or the fireproof insulating single industry." and	
(b)	(b) .....
(c) defendant, after the consummation of said agreement, never did market or license or lease any equipment under its said patent 2,270,341 in the solid particle field, and	(c) Admitted.
(d)	(d) .....
103. In the negotiations of defendant's predecessor company with Behr-Manning Corporation leading up to the consummation of the agreement dated September 26, 1944,	103.
(a) the Ransburg Company in a letter dated November 3, 1944, to Behr-Manning Corpo[illegible]n indicated that its "greatest concern" was as follows:	(a) Admitted.
"Our greatest concern and that to which we have given the most thought and consideration was the question of just how to word our	

Request for Admissions	Answer
future license agreements so that there could be no question in the minds of our users that they were restricted from operating in your field, and still not create undue sales resistance for ourselves. It was originally our thought that this would best be accomplished by adding to our license agreements 'said right does not include the use of this process in the manufacture of abrasive articles or articles coated with particles of fibrous material of every kind.' "However in reading this from our customer's viewpoint it is conceivable that 'fibrous materials' could possibly be interpreted by one who was not present at our meetings to mean particles of any mate-	

103. (cont'd)	103. (cont'd)
rials in nature which are fibrous in character. This interpretation could bring into this category practically all organic materials or their derivatives and might even be broadly construed to include cellulose lacquers or paints inasmuch as fibrous materials are used in their manufacture. We are certain it was your feeling that this term should have included only those materials which were used in a filament-like shape regardless of their basic or molecular character. We feel it is more in harmony with the thoughts expressed at our meetings, therefore, to base our description of this particular field on the shape of the particles rather than upon their basic nature. We might point out that fiber-shaped particles would include glass fibers and possibly others which normally would not be considered as 'fibrous material'. "We, therefore, have in mind adding the following, 'said right does not include the use of this process on articles used as an abrasive or articles coated with fiber-shaped particles.' If you have any contrary views or suggestions for improvement we shall appreciate receiving them.	

Request for Admissions	Answer
"In view of the above and fostered by our thoughts along this line it occurred to us that the use of the phrase 'particles of fibrous material' throughout the agreement could well be misinterpreted by an outsider. We feel therefore that this might be more clearly restated following the same thought." and	
(b) further proposed in said letter changes in the draft of the agreement being considered so as to "be more in harmony with our meeting of minds in our recent meetings", and	(b) Admitted.
(c) made the following remarks in connection with Ransburg's licensees:	(c) Admitted.
"Another point which arises in our minds is that pertaining to our outstanding license agreements which were referred to when you were here but which are not mentioned in the agreement. While we feel it most improbable that any of our licensees will or can ever use the process which they are licensed to use, in such a way as to invade,	

22

103. (cont'd)	103. (cont'd)
even to the slightest extent, any of the fields in which you are operating, we nevertheless feel that there should be complete understanding in respect to such licensees. Our execution of the agreement is, therefore, necessarily upon the assumption that it is subject to these outstanding licenses. In order that you may have full information on the subject and because we feel also that doing so will reassure you as to the improbability of these licensees ever invading your fields, we enclose a list of such licensees, and the description of their rights to use the process under their respective agreements. We also have a few proposals outstanding which, if accepted, will fall into the same category."	

Request for Admissions	Answer
105. During the course of its negotiations leading up to the license agreement dated September 26, 1944, with Behr-Manning Corporation, defendant's predecessor company received in the usual course of business the following quoted letter dated November 24, 1944:	105. Admitted.
"November 24, 1944 Mr. Harper J. Ransburg Harper J. Ransburg Company Indianapolis 7, Indiana Dear Mr. Ransburg: "Enclosed you will find three copies of the electrocoating agreement which have been signed by Behr-Manning in the form in which the agreement was redrafted as outlined in your letter of November 13. We think that the suggested changes were in accord with our verbal discussion and reflect a true meeting of minds. "It is my impression that the copy of the electrocoating agreement which you have executed with your existing licensees or had under negotiation with prospective licensees at the time our agreement was being consummated, contains an indication of the purpose for which the licensed Ransburg equipment is to be employed by the licensee.	

23

105. (cont'd)	105. (cont'd)
"If this is the case and since no licenses have to your knowledge been granted in the flock or abrasive fields, we do not forsee difficulty or conflict with any of your existing licensees and it should not be difficult for you to so limit your future licensees as to prohibit the employment of the patents under which you have given us exclusive rights for abrasives and flock-coated articles, in these fields. "We are looking forward to a pleasant and mutually profitable association in this new cross license agreement. Yours very sincerely, Behr-Manning Corporation E. C. Schacht Vice President"	

Request for Admissions	Answer
106. Defendant's predecessor, Harper J. Ransburg Company, in connection with its licensing agreement with Behr-Manning Corporation, received the following quoted letter in the mails: "September 27, 1944 Mr. Harper J. Ransburg Harper J. Ransburg Company Indianapolis 7, Indiana Dear Mr. Ransburg: "In the proposed cross licensing agreement enclosed in an accompanying letter, you will note in paragraphs 3 and 4 that Ransburg and Behr-Manning have reserved unto themselves the right to bring infringement actions under and defend the validity of their own patents. If this provision is acceptable to you, it will solve our problem with DeVilbiss because we can separately guarantee DeVilbiss immunity from suit for infringement of Smyser which is all that they had previously negotiated for in their request for a non-exclusive license. "As soon as you have indicated that the proposed cross-licensing agreement is satisfactory, we will communicate with DeVilbiss and arrange to give them written assurance in regard to Smyser. We will also want to inform the General	106. Admitted.
24	
106. (cont'd) Electric Company of our contract with you and the settlement with DeVilbiss because we are anxious to continue to cooperate with the General Electric Company in several fields. Yours very truly, Behr-Manning Corporation Vice President"	106. (cont'd)
110. (a) Defendant in its licensing of its airless or No. 2 system does not separately license each applicable patent, but (b) licenses in blanket form all of its patents which it considers may be applicable in each instance.	110. (a) Admitted. (b) Admitted to the extent that each of Defendant's customers receives, in effect, a covenant that it will not be sued for infringement of any of Defendant's present or future patent rights so long as the customer does not operate beyond the scope of the use specified in its written agreement with Defendant; otherwise denied.

619 UNITED STATES DISTRICT COURT.
(Caption—56-C-262)

MEMORANDUM OPINION.

The defendant, pursuant to Rule 56 (b) of the Federal Rules of Civil Procedure moved the Court to enter summary judgment for it on the following separable issues raised by the pleadings:

1. Alleged misuse by defendant of its United States Letters Patent Numbers 2,685,536 and 2,794,417;

2. Alleged violation by defendant of the Anti-Trust laws of the United States;

3. Alleged unfair competition by defendant, upon the ground that with respect to each of said issues there is no genuine issue as to one or more material facts and that it is entitled to judgment thereon as a matter of law.

In support of the motion the defendant submitted the pleadings, the discovery depositions of Burke Bernard Roche, John W. Baur, and Benjamin J. Hedger, the answers to all interrogatories addressed by either party to the other, and the affidavit of E. M. Ransburg.

In opposition to the motion, the plaintiff offers the additional evidence to that offered by defendant of de-
620 fendant's certain answers[1] to plaintiff's request for admissions; certain questions and answers[2] from the discovery depositions of Elmer Houlberg, Andrew G. Hubbard, Clarence Goltermann; certain questions and answers[3] from the discovery deposition of Milton F. Pleva; ex-

1. Admission: 1-3, 6, 8-12, 15, 17-19, 21, 22, 30, 34, 41, 42, 44, 46, 53, 56-58, and 71.

2. See appendix to plaintiff's brief in opposition filed July 11, 1958.

3. See deposition pages 168, 172, and 173.

hibits to the original complaint; letter dated July 15, 1953 from defendant to Altex Corporation; pricing guide of defendant dated July 15, 1953; Certified Copy File Wrapper and Contents, of patents in issue.

The docket history of the action is: the action concerning United States Letters Patent Number 2,685,536 was commenced by plaintiff's complaint on October 11, 1956 which was amended October 26, 1956. Defendant filed its answer and counterclaim on December 3, 1956. Plaintiff moved to dismiss its complaint on December 10, 1956 which was granted January 29, 1957. Plaintiff also on December 10, 1956 filed his answer to the counterclaim and filed a cross-counterclaim. Defendant filed its answer to the cross-counterclaim on February 18, 1957. Plaintiff amended its cross-counterclaim and its answer to the counterclaim on March 5, 1958.

Because of another United States Letters Patent Number 2,794,417 having been issued to defendant on June 4, 1957, the defendant on March 31, 1958 filed its supplemental answer to the amended cross-counterclaim and on May 21, 1958 filed its supplemental counterclaim bringing the new patent within the issues. It was stipulated by the parties that all prior proceedings, pleadings, interrogatories and depositions apply where applicable to the supplemental counterclaim.

621 Defendant filed its motion for summary judgment on May 26, 1958.

Thereafter plaintiff on June 11, 1958 answered the supplemental counterclaim and on August 7, 1958 plaintiff amended its answer to the supplemental counterclaim and amended its cross-counterclaim. Defendant filed on August 7, 1958 its answer to the amended cross-counterclaim.

By agreement of the parties on August 7, 1958, the defendant refiled its motion for summary judgment and

the affidavit of E. M. Ransburg in support thereof. It was stipulated that the pleadings referred to in the motion be deemed to include all pleadings herein as amended and supplemented.

The issues of misuse of the patents in question are raised by rhetorical paragraph seven (7) of plaintiff's answer to the counterclaim, rhetorical paragraph eight (8) of plaintiff's answer to supplemental counterclaim, and rhetorical paragraphs eighteen (18) through forty-eight (48) of the cross-counterclaim.

The issues of violation of the Anti-Trust laws of the United States are raised by rhetorical paragraphs eighteen (18) through forty-eight (48) of the cross-counterclaim.

The issues of unfair competition are raised by rhetorical paragraphs nine (9) of plaintiff's answer to supplemental counterclaim of June 11, 1958, and among others paragraphs nineteen (19), twenty-two (22), and forty (40(c)) of the cross-counterclaim.

Upon hearing and argument plaintiff suggested that the affirmative defense of misuse of the patents in question is in equity and that no summary judgment can be granted under 56 (c) F. R. C. P. as the defendant moving party would not be entitled, as a matter of law, to a judgment. This phase of defendant's motion will be denied upon authority of *Seaboard Surety Co.* v. *Racine Screw Co.* (1953), C. A. 7, 203 F. 2d 532. Judge Major held at pages 533 and 534:

622 "Much of plaintiff's brief is devoted to an argument in support of its contention that there was 'no genuine issue as to any material fact' and that plaintiff, therefore, was entitled to a summary judgment as a matter of law. While we think there was a genuine issue of material fact involved, we find it unnecessary to resolve that dispute because, even though plaintiff's contention be accepted, it still was not entitled to a decree as a matter of law."

> "In a legal action, a party is entitled to all the law allows; in the instant action for equitable relief, plaintiff was entitled only to that which the Court in the exercise of a sound discretion concluded to be fair and equitable. And undoubtedly, in the latter situation the Court was duty bound to take into consideration many circumstances and factors which would be of no consequence in the former. It is not difficult to visualize that in an action for specific performance, one Court, on a certain set of facts and circumstances, might allow the relief sought, while another Court on exactly the same record might deny the relief. And it is possible that both Courts, on appeal, would be affirmed, because neither was shown to have abused its discretion."

This is authority that plaintiff filing the answer in question could not have summary judgment and I conclude that the defendant cannot for the same reason.

As to the second phase of the motion whether or not there is an issue of material fact concerning the alleged Anti-Trust violations the facts must be examined.

Among the many allegations of Anti-Trust violations the plaintiff alleges at paragraph thirty (30) of its cross-counterclaim, which is denied in defendant's answer, the following:

> "Defendant's predecessor, Harper J. Ransburg Company, entered into an agreement in restraint of trade with the Behr-Manning Corporation dividing the field of electrostatic coating between the parties thereto. Defendant has succeeded to all of said predecessor's rights under said agreement, and in furtherance of the purposes thereof, has coerced the trade into dealing only with the defendant in the field of electrostatic spray coating of liquids."

for which plaintiff asks for a money judgment under 15 U. S. C. A. 15.

The evidence offered on this issue discloses:

That on September 26, 1944, an agreement was executed between defendant's predecessor partnership and Behr-
623 Manning Corporation[4] at the time Behr-Manning Corporation was a leading manufacturer of abrasive articles and defendant's predecessor was engaged in the initial marketing of No. 1 Process electrostatic painting systems. Behr-Manning Corporation owned patent rights which, although they were directed primarily to the electrostatic application of abrasives, adhesives, flocks and fibers, defendant's predecessor anticipated might be asserted against it and users of its No. 1. Process. The agreement was entered into by defendant's predecessor to avoid such possible charges and to permit it to market the No. 1 Process without interference.

The defendant admits that Behr-Manning Corporation has not gone into competition with the defendant in the electrostatic liquid spraying field.[5]

The defendant admits that it has not issued any license in the field of manufacturing abrasive articles, flock coated articles, and/or artciles coated with fiber-shaped particles.[6]

The defendant admits receiving inquiries as to whether its processes and equipment are suitable for manufacturing abrasive articles, flock coated articles, and/or articles coated with fiber-shaped particles. Defendant replied in substance that its processes and equipment was primarily for electrostatic painting, and has informed them that Behr-Manning Corporation might be able to furnish the desired information.[7]

It is apparent that the contract set forth does not express the intent and purpose of the parties cross licensing

4. Exhibit "V" attached to affidavit of Ransburg.
5. Admission fifty-eight (58).
6. Interrogatory eighty (80(a)).
7. Interrogatory eighty-three (83(a)(b)).

their patents. The affidavit of Mr. Ransburg is not clear as to the intent and purpose. It recites, "anticipated 624 might be asserted against it" (Ransburg partnership) "and users of its No. 1 Process." It further recites, "The agreement was * * * to permit it to market the No. 1 Process without interference." Two inferences from these facts may be drawn. That it was a bona fide settlement of possible infringement claims, and/or that it was to prevent completion, create a monopoly and restrain trade in Ransburg's field of operation. If the latter inference prevails, then the remaining facts set forth above disclose a distribution between the contracting parties of the market into two fields of electrostatic spray coating and creating a monopoly forbidden by the Anti-Trust laws.

The facts clearly demonstrate that the defendant is the sole producer of its product in the United States and has complete dominance thereof. With complete dominance and the adopting of such inference for the purpose of showing there is an issue of fact, the defendant has illegally obtained the power to fix and maintain royalties which is tantamount to the power to fix prices.

The agreement for cross licensing used to effect a monopoly, or to impose an unreasonable restraint upon interstate commerce violates the Sherman Anti-Trust Act. *Bement* v. *National Harrow Co.*, 186 U. S. 70, 22 S. Ct. 747 46 L. Ed. 1058; *Cement Manufacturers Protective Association* v. *United States*, 268 U. S. 588, 604, 45 S. Ct. 586, 592, 69 L. Ed. 1104; *United States* v. *General Electric Co.*, 272 U. S. 476, 490, 47 S. Ct. 192, 71 L. Ed. 326; *United States* v. *Trenton Potteries Co.*, 273 U. S. 392, 397, 47 S. Ct. 377, 71 L. Ed. 700, 50 A. L. R. 989; *United States* v. *International Harvester Co.* (D. C., 214 F. 987; *Standard Oil Co.* (Ind.) v. *United States* (Ill.), 51 S. Ct. 421, 283 U. S. 163, 75 L. Ed. 926.

There is a genuine issue of fact where two inferences

may be drawn from an undisputed fact and summary
625 judgment cannot be granted on this phase of the case.
Taylor v. *Virden* (8 Cir.) 217 F. 2d 739; *United States* v. *Dollar* (9 Cir.) 196 F. 2d 551; *Ramsouer* v. *Midland Valley R. Co.* (8 Cir.) 135 F. 2d 101; *Rowan* v. *United States* (5 Cir.) 219 F. 2d 51; *United States* v. *General Ry. Signal Co.* (D. C. W. D. N. Y.) 110 F. Supp. 422.

As to the third phase of the motion whether or not there is an issue of material fact concerning the alleged unfair competition, the facts must be examined.

And among the allegations of unfair competition, the plaintiff alleges at paragraph twenty-two (22) of its cross-counterclaim, which is denied in defendant's answer, the following:

> "The defendant, its officers and • • • inventors of the Starkey et al. patent, • • •, have conspired • • • in restraint of trade and in the monopolizing, through patents and illegal agreements, of the electrostatic spray equipment business and in interstate commerce, contrary to the Anti-Trust and Anti-Monopoly laws of the United States, and in so doing have committed illegal acts of unfair competition, all to the detriment of the public and to the damage of the plaintiff."

There being an issue of fact on the alleged Anti-Trust issue of the Behr-Manning Corporation transaction, and the issue of alleged illegal contract of the Behr-Manning Corporation transaction, upon which this charge of unfair competition is based it follows that there is an issue of fact of unfair competition as to both patents in issue.

And among the allegations of unfair competition, the plaintiff alleges at paragraph forty (40(c)) of its cross-counterclaim, which is denied in defendant's answer, the following:

> "(c) That even then such vague and indefinite language was only adopted as a means of obtaining an additional claim with which to harrass plaintiff with an unwarranted charge of infringement."

626 The basis of this charge is the alleged harassment by an alleged unwarranted charge of infringement of the later patent. The infringement issue is unsupported factually in this summary judgment proceeding and the motion must fail. Infringement was specifically excluded from the issues of the summary judgment proceeding by defendant.

It is unnecessary to recite any other issue of fact.

What inference or inferences will be adopted upon trial will depend upon the weight of the whole of the evidence.

It is therefore, Ordered and Adjudged that the defendant's motion for summary judgment is denied.

Dated this 2nd day of September, 1958.

Cale J. Holder,
Judge, United States District Court Southern District of Indiana.

611 IN THE UNITED STATES DISTRICT COURT.
• • (Caption—56-C-262) • •

STIPULATION.

It is hereby stipulated that:

1. Soft copies of patents or photographic or photostatic copies of printed publications, or of parts thereof, may be used as evidence in the above identified action in place of the originals and without need for formal authentification wiht the same force and effect as the originals, subject to correction if error appears.

2. The parties hereto may retain custody of all their respective original exhibits, subject to inspection by the other party upon reasonable notice. Photostatic copies of all documentary exhibits, or parts thereof, may be offered

in evidence in place of the originals and without need for formal authentification with the same force and effect as the originals, subject to correction if error appears.

3. The dates upon which all printed publications (exclusive of patents), domestic and foreign, cited by plaintiff in its pleadings, were available as publications in this country are all more than one (1) year prior to September 29, 1944, the filing date of the Starkey and Ransburg Patent No. 2,685,536 in suit.

4. Defendant, Ransburg Electro-Coating Corp. is the owner by assignment of all right, title and interest in and to the Starkey and Ransburg Patents Nos. 2,685,536 and 2,794,417.

612 5. The parties are corporate entities as alleged in the pleadings, and this Court has jurisdiction over such parties and the subject matter in suit.

6. Insofar as any subject matter in this suit is concerned, defendant, Ransburg Electric-Coating Corp. is the successor in business to Harper J. Ransburg Co., a co-partnership consisting of Harper J. Ransburg Harold P. Ransburg, Edwin M. Ransburg, and Gregg Ransburg, and has succeeded to all rights and has assumed all obligations under agreements entered into by the Harper J. Ransburg Co. with respect to said subject matter.

Charles F. Meroni,
Hill, Sherman, Meroni, Gross & Simpson,
53 West Jackson Boulevard,
Chicago 4, Illinois,
Attorneys for Plaintiff,

Dated: July 25, 1958.

Howard W. Clement,
Byron, Hume, Groen & Clement,
38 South Dearborn Street,
Chicago 3, Illinois,
Attorneys for Defendant.

Dated: July 24, 1958.

613 UNITED STATES DISTRICT COURT.
• • (Caption—56-C-262) • •

ORDER FOR PRODUCTION OF DOCUMENTS UNDER RULE 34.

Defendant, Ransburg Electro-Coating Corp., is ordered to produce the following documents in the possession or control of Defendant for inspection, copying, or photographing by Plaintiff's counsel under the provisions of Rule 34, Federal Rules of Civil Procedure, at the offices of Defendant's attorneys, Byron, Hume, Groen & Clement in the First National Bank Building, Chicago, Illinois, at as early a time as Defendant may reasonably produce said documents, which time shall be agreed upon by counsel:

1. All correspondence between Harper J. Ransburg Company, and its successor in business, or its representatives and agents, or its attorneys and the Western Electric Company, or its attorneys, or any memorandum concerned in any way with the transfer of rights to the Pugh Patent No. 1,855,869 to the Harper J. Ransburg Company; and including the letters which Defendant has heretofore refused to produce during the course of depositions herein.

614 2. All correspondence between Harper J. Ransburg Company and its successor in business or its representatives or agents, or its attorneys and the Brush Development Company, or its attorneys, concerned in any way with the transfer of the rights to the patent application of Charles K. Gravley, Serial No. 313,914, filed January 15, 1940.

3. All correspondence between the Harper J. Ransburg Company and its successor in business or its representatives or agents, or its attorneys and the

Behr-Manning Corporation, or its attorneys, concerned in any way with the transfer of rights under patents and applications listed in the agreement dated September 26, 1944, between the two companies.

4. All correspondence between Defendant Ransburg Electro-Coating Corp., Harper J. Ransburg Company, their representatives, or their attorneys and Research Corporation, concerned in any way with the transfer of rights under patents listed in the agreement dated October 7, 1948, between Defendant and Research Corporation.

5. All correspondence, memoranda and reports, including those of Defendant's house attorneys and all past and present outside attorneys, relating in any way to the preparation and drafting of the printed license agreements herein previously identified as D-1 through D-38 in Defendant's answer to Plaintiff's Interrogatory No. 8, but excluding any privileged communications between attorney and client.

6. All correspondence, memoranda and reports of any and all past and present attorneys for Defendant having to do with the negotiations of any of the licenses herein previously identified in Exhibit E in Defend-
615 ant's answer to Plaintiff's Interrogatory No. 33, and not available through inspection of the customer and prospective customer files of the Defendant which have heretofore been made available to Plaintiff for inspection, and also excluding any privileged communications between attorney and client.

7. All reports, correspondence and written memoranda dated prior to this suit in the files of Defendant or any of its past or present counsel or agents showing in any way knowledge by Defendant of prior patents, patent applications and/or publications of third parties relating to airless electrostatic spraying,

but excluding any privileged communications between attorney and client.

Dated August 25, 1958.

Cale J. Holder,
United States District Judge.

Approved as to form
Charles F. Meroni,
Attorney for Plaintiff,
V. A. Trask,
Attorney for Defendant.

750 IN THE UNITED STATES DISTRICT COURT.
(Caption—56-C-262)

STIPULATION.

It is hereby stipulated that:

1. The printed publication entitled "The Ions Produced By Discharges At Liquid Surfaces" by Nolan and O'Keeffe, appearing in Volume XXXIX, Section A, of the Proceedings of the Royal Irish Academy, was available in this country at a date more than one (1) year prior to September 29, 1944, the filing date of the Starkey and Ransburg Patent No. 2,685,536 in suit.

Charles F. Meroni,
Hill, Sherman, Meroni, Gross & Simpson,
53 West Jackson Blvd.,
Chicago 4, Illinois,
Attorneys for Plaintiff,

Dated: October 13, 1958.

Howard W. Clemen,
Byron, Hume, Groen & Clement,
38 South Dearborn Street,
Chicago, Illinois,
Attorneys for Defendant.

Dated: 10/15/38

808 IN THE UNITED STATES DISTRICT COURT.
• • (Caption—56-C-262) • •

SECOND STIPULATION

It is hereby stipulated and agreed by and between the undersigned counsel for the respective parties that the plaintiff may, in the trial of this case, offer in evidence the attached letter dated March 4, 1955, from the Dewey and Almy Chemical Company of Cambridge, Massachusetts, to the Behr-Manning Corporation, without any need of formal proof of the sending of the letter or of its authenticity, subject only to the right of the defendant to object on the grounds of materiality and relevancy.

Charles F. Meroni,
Hill, Sherman, Meroni, Gross & Simpson,
53 West Jackson Blvd.,
Chicago 4, Illinois,

Howard W. Clemen,
Byron, Hume, Groen & Clement,
38 South Dearborn Street,
Chicago 3, Illinois,

Chicago, Illinois
Dated: Sept. 26, 1958.

809 March 4, 1955

Mr. John Amstus
Behr-Manning Corporation
Troy, New York

Dear Mr. Amstus:

The Ransburg Electro-Coating Corporation has referred me to you for information on a electrostatic method of fleck coating that might be used for coating paper with thermoplastic material.

We are interested to know if it is feasible to coat polyethylene, polystyrene, polyvinyl chloride, and like materials on paper in a continuous process where the paper is feeding through a process at perhaps 50 RPM. We understand that it might be possible to use an electrostatic method so that a plastic material can be deposited on the paper to provide a protective coating. Our chief interest is not in a completely impermeable coating, but rather a discontinuous coating of the plastic on the paper.

Do you believe that it is possible to consider your method for this kind of an application? I would appreciate any help you can give me in this matter.

Very truly yours,

D. A. Trageser,

DAT:ssp

810 UNITED STATES DISTRICT COURT.

(Caption—56-C-262).

FIRST STIPULATION

It is hereby stipulated by and between the parties, through their counsel, that the Binks airless electrostatic spray coating system here charged to infringe Starkey and Ransburg Patents Nos. 2,685,536 and 2,794,417, and one representative use of such system are accurately represented on the attached chart containing drawings forming parts of Plaintiff's Exhibits E, 28C and 28B.

The operation of the device can be explained as follows: The emitter takes the form of two sharp edged disks located on a generally cylindrical inlet body. A single cap nut threaded onto one end of the inlet body allows quick and easy disassembly of the two sharp edged disks.

Liquid coating material is fed into the inlet body through an inlet tube, the amount of flow being controlled by a valve located in the tube. Material issuing through the valve is directed to the space between the two disks by an angularly disposed passageway in the inlet body. The liquid coating material thereupon flows radially outward under a slight positive pressure to the outer, sharp edges of the disks from which it is atomized.

As indicated in the drawing of Exhibit 28C, the emitter structure is connected to a power supply which ap-
811 plies a potential in the range from about 25,000 to 110,000 volts. The emitter is spaced from an object to be coated, which object is at ground potential. The spacing between the emitter and the article has ranged from about ten inches to three feet.

As the liquid coating material is delivered to the sharp circular edges of the disk, the high voltage gradient pres-

ent forms the liquid material into discharge streamers extending outwardly from the disk edges. The tips of the streamers produced, as indicated in Plaintiff's Exhibit 28B, break off as atomized charged particles of liquid coating material outside the confines of the disk. As indicated in Exhibit 28C these particles, due to electrostatic forces, disperse in passage from the emitter disk to the article and form a spray whose dimensions are substantially greater than the length of the atomizing area along the disk.

Charles F. Meroni,
Otto R. Krause,
Attorneys for Plaintiff, Binks Manufacturing Company,

Verne A. Trask,
James P. Hume,
Attorneys for Defendant, Ransburg Electro-Coating Corp.

Date: November 7, 1958

BINKS' EMITTER DISK ELECTROSTATIC SPRAY SYSTEM

EMITTER DISK
PLAINTIFF'S EX. E

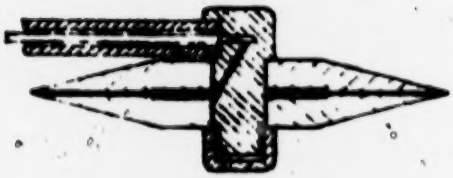

DISK EMITTER IN POWER SUPPLY CIRCUIT
SPRAYING ARTICLES PLAINTIFF'S EX. 28 C

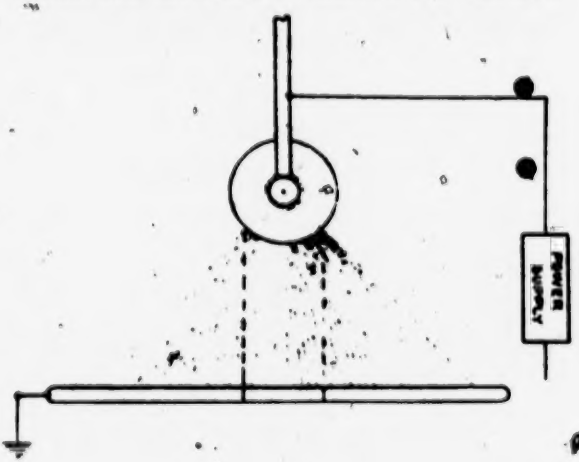

874 IN THE UNITED STATES DISTRICT COURT.

* * (Caption—56-C-262) * *

STIPULATION.

It is hereby stipulated by the parties hereto through their respective counsel, this Honorable Court consenting, that:

(1) Exhibits D-1 to D-45 inclusive, attached as Exhibit D to defendant's answers to plaintiff's amended interrogatories and referred to in the answer to plaintiff's interrogatory No. 8, are illustrative of the different forms of agreement which defendant has used in its licensing program relating to the electrostatic spray coating of articles;

(2) Exhibit E, attached to defendant's answers to further interrogatories of plaintiff and referred to in the answer to plaintiff's interrogatory No. 33, identifies by number the form of license in Exhibit D which was used in the case of each of the 732 licenses granted by the defendant, as set forth in the answer to plaintiff's interrogatory No. 3;

(3) The form of license so identified in Exhibit E is the same as the form of license actually executed in each instance and such form (or a photostat thereof) may be introduced as evidence in this case in lieu of the document actually executed;

875 (4) If it shall appear, however, that any particular license as executed embodied changes made in the

printed form employed, said changes may be shown as being part of said license.

James P. Hume,
Byron, Hume, Groen & Clement,
38 South Dearborn Street,
Chicago 3, Illinois,

Charles F. Meroni,
Hill, Sherman, Meroni, Gross & Simpson,
53 West Jackson Blvd.,
Chicago 4, Illinois.

Chicago, Illinois,
Dated: November 14, 1958.

876 UNITED STATES DISTRICT COURT.
• • (Caption—56-C-262) • •

STIPULATION REGARDING DEFENDANT'S KNOWLEDGE OF PRIOR ART.

The parties, through their counsel, hereby stipulate that the Defendant, Ransburg Electro-Coating Corp., had knowledge of the following communications during the pendency of the application which ultimately issued as Starkey and Ransburg Patent No. 2,685,536:

Letter of February 19, 1948 to Miss Louise C. Simmons, a copy of said letter being attached hereto;

Letter of William J. Stellman to Defendant dated September 21, 1953 and list accompanying said letter, a copy of said list and said letter being attached hereto.

Charles F. Meroni,
Attorney for Plaintiff,

Howard W. Clement,
Attorney for Defendant.

Date: November 25, 1958.

877 Air Mail

February 19, 1948

Miss Louise C. Simmons
1079 National Press Bldg.
Washington 4, D. C.
Subject: Darrah Patent No. 1,958,406

Dear Miss Simmons:

Thank you for your prompt attention to my recent request to forward the list of references cited during the prosecution of the above patent.

I wonder if you would now be good enough to procure for us, as prompt as possible, one copy of each of the following references:

U. S. Patents: 1,051,131 Lee
1,473,347 Hoskins
1,475,995 Heis
1,295,283 Diebold
1,056,045 Murray
398,327 DeVars
739,920 Pauling

Swedish Patent No. 51,988 of 1922, Diebold
Publication: Berichte der Deutsche Chemisch Gesellschaft, Vol. 41 (1908) Page 950.

Please charge the cost of the above to Ransburg Electro-Coating Corp. account.

Very truly yours
Ransburg Electro-Coating Corp.,
By _____

CAOrdway/eh

878 (Letterhead of Schroeder, Merriam, Hofgren & Brady, Chicago, Illinois.)

September 21, 1953

Ransburg Electro-Coating Corp.
1234 Barth Avenue
Indianapolis 7, Indiana

Attention: Mr. Harry E. Downer

Re: Prior Art Patents

Dear Harry:

As I mentioned to you over the phone recently, Mr. Arnold has made available to us his prior art file on what he calls "electrostatic projection." Accordingly we had one of our Washington secretaries go into the division and list all of the patents in these files. We enclose the list for your information. We would be interested to know if any of these patents is new to you.

Very truly yours,

Schroeder, Merriam, Hofgren & Brady
Bill
William J. Stellman

WJS/sn
Encl.

878½ U. S. Patents.

Re. 20,660—Schacht
645,786—Buck
668,792—Blake et al
705,691—Morton
892,188—Schwerin
894,070—Schwerin
945,917—Cottrell
1,099,934—Schmidmer
1,123,962—Walker
1,278,521—Tillyer
1,349,362—Chubb
1,360,654—Littlefield
1,416,929—Bailey
1,549,875—Horne
1,788,600—Smyser
1,958,406—Darrah
1,698,845—Gustin
1,575,165—Hopkinson
1,584,728—Case
1,650,105—Anderson
1,710,747—Smith
1,750,177—Klein
1,816,388—Mittasch et al
1,820,194—Huebner
1,832,096—Chaffee et al
1,854,071—Schacht
1,855,869—Pugh
1,861,475—Hopkins et al
1,884,110—Morehouse
1,886,234—Meissner
1,886,236—Meissner
1,911,808—Collins, Jr.
1,932,057—Wheeler
1,940,654—Stanton
1,954,995—Harrison
1,969,379—Meissner
2,027,087—Buchner
2,027,307—Schacht
2,027,308—Schacht
2,027,309—Schacht
2,033,991—Melton
2,047,525—Thode
2,048,651—Norton
2,049,940—Barthel
2,052,131—Chappell
2,070,972—Lindenblad
2,082,182—Schacht
2,087,260—Miller

879

2,097,233—Meston
2,109,333—Formbals
2,116,942—Formbals
2,123,992—Formbals
2,128,327—Russell et al
2,128,811—Foster
2,128,907—Benner et al
2,138,938—Plensler
2,146,025—Penning
2,147,824—Webb
2,152,077—Meston et al
2,157,478—Burkhardt et al
2,158,415—Formbals
2,158,416—Formbals
2,160,962—Formbals
2,166,385—Wintermute
2,168,027—Gladding
2,173,032—Wintermute
2,173,078—Meston
2,173,242—Young
2,174,328—Meston et al
2,184,348—Kirchner et al
2,187,306—Formbals
2,187,624—Melton et al
2,191,827—Benner et al
2,194,253—Benner et al
2,198,766—Gallagher

2,207,217—Fodor
2,215,145—Clayton et al
2,215,167—Sumner et al
2,217,126—Meston et al
2,217,444—Hill
2,221,338—Wintermute
2,221,776—Carlson
2,218,445—Wintermute
2,222,539—Meston
2,223,476—Amstuz
2,224,391—Huebner
2,231,324—Crompton, Jr.
2,239,642—Burkhardt et al
2,239,695—Bennett
2,245,200—Johnson
2,245,301—Schacht
2,247,963—Ransburg et al
2,248,064—Carlton et al
2,248,853—Carlton et al
2,270,341—Ransburg

880

2,274,726—Melton
2,279,361—Amstuz
2,279,187—Thompson et al
2,286,569—Pollack
2,287,837—Smyser
2,281,558—Cross
2,300,324—Thompson
2,302,185—Campbell, Jr.
2,302,289—Bramston-Cook
2,319,082—Nestor
2,334,648—Ransburg et al
2,306,105—Grave et al
2,318,570—Carlton
2,318,571—Carlton
2,328,577—Oglesby
2,338,570—Childs
2,352,252—Canetta
2,356,489—Amstuz
2,357,354—Penney
2,357,355—Penney
2,357,658—Johnsen et al
2,359,476—Gravley
2,368,706—Fountain
2,370,636—Carlton
2,371,605—Carlton et al
2,376,342—Carlton
2,376,343—Carlton
2,376,922—King
2,384,541—Fruth
2,385,873—Melton
2,405,249—Wilson
2,405,662—McManus et al
2,408,144—Huebner
2,417,798—Ransburg et al
2,417,850—Winslow
2,418,479—Pratt et al
2,421,787—Helmuth
2,425,652—Starkey
2,429,862—Woofter et al
2,431,629—Wind et al
2,435,273—Hatfield
2,438,561—Kearsley
2,446,953—Ransburg
2,447,664—Pegg
2,424,043—Meyer
2,425,652—Starkey
2,426,016—Gustin et al
2,428,868—Dimmick

881

2,433,116—Greenbowe et al
2,437,606—Kaufman
2,442,880—Schwartz
2,442,986—Ransburg
2,446,440—Swedlund
2,451,288—Huebner
2,456,708—Kellogg
2,456,853—Arbron

2,457,256—Melton et al
2,463,422—Ransburg et al
2,464,453—Lindquist
2,465,128—Starkey
2,466,906—Miller
2,476,145—Gwyn et al
2,477,947—Yodoff
2,483,462—Huebner
2,486,877—Ransburg et al
2,491,889—Bennett et al
2,493,073—Kinneen
2,499,467—DeForest et al
2,494,470—Carlson
2,501,563—Colbert et al
2,509,276—Ransburg et al
2,509,277—Ransburg et al
2,509,448—Ransburg et al
2,520,504—Hooper
2,522,082—Arnold
2,523,618—Gilman
2,523,650—Dickson
2,525,347—Gilman
2,526,178—Weber
2,526,763—Miller
2,527,501—Saks
2,528,087—Schoepe
2,531,542—Stone
2,538,562—Gustin et al
2,544,806—Ransburg
2,546,701—Ransburg et al
2,548,477—Kohaut
2,549,927—Ransburg
2,550,657—Ransburg
2,551,035—Miller
2,558,900—Hooper
2,555,519—Tolle et al
2,559,225—Ransburg
2,560,047—York et al
2,562,358—Huebner
2,567,781—Ransburg

882

2,568,611—Crouse
2,573,881—Walkup et al
2,589,034—Beedy
2,576,922—Camin et al
2,598,466—Tuttle et al
2,600,129—Richards
2,604,870—Blood et al
2,611,930—Hill et al
2,626,589—Lamm
2,636,471—Starkey
2,644,769—Robinson

883 **Foreign and Pubs.**

British 196,695—1923—Br. Metal Spray Co. Ltd.
339,913—1930—Lohaussois
378,014—1932—Behr-Manning Corp.
396,385—1933—Behr-Manning Corp.
407,978—1934—Behr-Manning Corp.
550,391—1943—Lumb
570,552—1945—Gravley (Brush Development Co.)
594,564—1947—Ransburg et al
599,466—1948—Smyth (The Birmingham Small Arms Co. Ltd.)

German 543,843—1932—Horn
571,004—1933—Siemens-Schuckertwerke A. G.

French 827,094—1938—N. V. Philips Glacilampenfabricken

C. A. 1950/1951 Vol. 45, p. 9910b.

Scientific American, Nov. 1933, pp. 216-7; "There is no sand in sandpaper."

Plastics, Jan. 1949, pp. 12-14; "Electrostatic process of plastics," by Dickinson.

Organic Finishing, June 1951, pp. 14-15, "Using radioisotopes to develop organic finishes," by Dickinson.

884 Pamphlet (15 pp.): "Ransburg Coating Processes," Pub'd by Harper J. Ransburg Company (Electric Coating Div.), 1204 Barth Ave., Indianapolis 7, Ind. (Rec'd in Pat. Off. 10-30-47.)

Pamphlet (15 pp.): No. 2, "Electrostatic Process—An Amazing Development in Spray Painting," Pub'd by Ransburg Electrocoating Corp., 1234 Barth Ave., Indianapolis 7, Ind. (Pubd. date: July 26, 1951; Rec'd in Pat. Off. Sept. 19, 1951.)

868 IN THE UNITED STATES DISTRICT COURT.
• • (Caption—56-C-262) • •

STIPULATION REGARDING PATENT RIGHTS OF DEFENDANT.

Defendant, Ransburg Electro-Coating Corporation through its counsel, hereby stipulates that it owns or has owned at the date of expiration of any expired patents, the following United States patents, and that this list is complete:

Patent No., Issue Date and Inventors:
1,855,869—4-26-32—Emerson Pugh
2,247,963—7-1-41—H. P. Ransburg et al
2,270,341—1-20-42—H. P. Ransburg
2,334,648—11-16-43—H. P. Ransburg et al
2,335,790—11-30-43—H. P. Ransburg
2,359476—10-3-44—C. K. Gravley
2,417,798—3-18-47—H. P. Ransburg et al
2,421,787—6-10-47—R. E. Helmuth
2,425,652—8-12-47—W. A. Starkey
2,428,991—10-14-47—H. P. Ransburg
2,442,986—6-8-48—H. P. Ransburg
2,444,144—6-29-48—E. M. Ransburg
2,446,953—8-10-48—H. P. Ransburg
2,463,422—3-1-49—H. P. Ransburg et al
2,465,128—3-22-49—W. A. Starkey
2,466,906—4-12-49—E. P. Miller
869 2,486,877—11-1-49—H. P. Ransburg et al
2,509,276—5-30-50—E. M. Ransburg et al
2,509,277—5-30-50—E. M. Ransburg et al
2,509,448—5-30-50—H. P. Ransburg et al
2,526,763—10-24-50—E. P. Miller
2,526,780—10-24-50—H. K. Stoddard
2,531,542—11-28-50—R. H. Stone
2,544,806—3-13-51—E. M. Ransburg
2,546,701—3-27-51—H. P. Ransburg et al
2,549,927—4-24-51—E. M. Ransburg

2,550,657—4-24-51—H. P. Ransburg
2,551,035—5-1-51—E. P. Miller
2,553,724—5-22-51—E. M. Ransburg
2,559,225—7-3-51—H. P. Ransburg
2,567,781—9-11-51—H. P. Ransburg
2,568,611—9-18-51—W. W. Crouse
2,605,982—8-5-52—E. P. Miller
2,632,716—3-24-53—W. A. Starkey
2,636,471—4-28-53—W. A. Starkey
2,640,459—6-2-53—H. K. Stoddard
2,650,329—8-25-53—J. D. Orndoff
2,651,287—9-8-53—R. H. Turner
2,655,128—10-13-53—E. M. Ransburg
2,658,009—11-3-53—E. M. Ransburg
2,658,472—11-10-53—E. M. Ransburg
2,662,833—12-15-53—R. E. Helmuth
2,684,656—7-27-54—E. M. Ransburg
2,685,536—8-3-54—W. A. Starkey et al
2,690,730—10-5-54—J. C. Marsh
2,695,002—11-23-54—M. R. Miller
2,697,411—12-21-54—H. P. Ransburg
2,698,814—1-4-55—E. M. Ransburg
2,703,549—3-8-55—E. M. Ransburg
2,706,964—4-26-55—E. M. Ransburg et al
2,711,155—6-21-55—W. A. Starkey
2,718,477—9-20-55—E. P. Miller
2,723,646—11-15-55—E. M. Ransburg
2,723,921—11-15-55—W. A. Starkey
2,724,661—11-22-55—J. W. Juvinall
2,728,606—12-27-55—W. L. Smart et al
2,728,607—12-27-55—W. L. Smart
2,728,689—12-27-55—E. M. Ransburg
2,729,191—1-3-56—E. M. Ransburg
2,730,460—1-10-56—H. P. Ransburg
2,730,461—1-10-56—J. E. Vawter
2,730,988—1-17-56—W. A. Starkey
2,731,589—1-17-56—J. C. Marsh
2,733,171—1-31-56—E. M. Ransburg
2,736,671—2-28-56—E. M. Ransburg et al
2,741,218—4-10-56—E. P. Miller
2,744,033—5-1-56—J. W. Juvinall
2,748,018—5-29-56—E. P. Miller

2,751,564—6-19-56—J. C. Marsh
2,751,851—6-26-56—Norman S. Curtis et al
2,752,883—7-3-56—Norman S. Curtis
870 2,754,226—7-10-56—J. W. Juvinall
2,754,227—7-10-56—E. M. Ransburg
2,759,763—8-21-56—J. W. Juvinall
2,759,764—8-21-56—R. C. Juvinall et al
2,761,544—9-4-56—H. A. Williams
2,764,125—9-25-56—J. W. Juvinall
2,764,712—9-25-56—J. W. Juvinall
2,769,728—11-6-56—J. W. Juvinall
2,770,210—11-13-56—E. P. Miller
2,777,784—1-15-57—E. P. Miller
2,780,565—2-5-57—R. C. Juvinall
2,781,279—2-12-57—M. R. Miller
2,781,280—2-12-57—E. P. Miller
2,784,114—3-5-57—E. P. Miller
2,785,088—3-12-57—E. M. Ransburg
2,788,081—4-9-57—E. M. Ransburg
2,794,416—6-4-57—J. B. Shepherd
2,794,417—6-4-57—W. A. Starkey et al
2,794,751—6-4-57—R. C. Juvinall
2,795,516—6-11-57—E. P. Miller
2,798,008—7-2-57—E. P. Miller
2,799,532—7-16-57—W. L. Smart
2,802,561—8-13-57—R. C. Juvinall
2,803,496—8-20-57—E. M. Ransburg
2,808,343—10-1-57—C. C. Simmons
2,809,128—10-8-57—M. R. Miller
2,809,902—10-15-57—E. M. Ransburg
2,812,269—11-5-57—E. M. Ransburg
2,839,425—6-17-58—J. W. Juvinall
2,842,460—7-8-58—J. W. Juvinall
2,859,701—11-11-58—H. A. Williams
D-173,073—9-21-54—J. C. Marsh et al

It is further stipulated that defendant had at the date of expiration a license, with a right to sublicense, under each of the following United States patents:

RE 22,419	2,097,233
2,047,525	2,221,338

has a license with a right to sublicense under United States Patent No. 2,548,477; and as of September 26, 1944, entered into an agreement with Behr-Manning Corporation to which a schedule was attached listing the following United States patents (or the applications which matured into said patents), under which defendant nominally had a
871 license with a right to sublicense, which license in fact and in law may have conferred no rights upon the defendant because of the limitations upon the license grant in said agreement:

RE 20,660	2,174,328	2,318,570
1,854,071	2,217,126	2,318,571
2,027,087	2,218,445	2,328,577
2,027,308	2,222,539	2,356,489
2,027,309	2,223,476	2,370,636
2,082,182	2,231,324	2,371,605
2,087,260	2,245,301	2,376,342
2,152,077	2,248,064	2,376,343
2,166,385	2,248,853	2,376,922
2,173,032	2,279,361	2,447,374
2,173,078	2,281,558	2,463,241
	2,287,837	2,463,242

Howard W. Clement,
Attorneys for Defendant.

Receipt of two (2) copies of the above Stipulation Regarding Patent Rights of Defendant is acknowledged this 24th day of November, 1958.

Charles F. Meroni,
Attorney for Plaintiff.

2 UNITED STATES DISTRICT COURT.
(Caption—56-C-262)

Be It Remembered, That in the United States District Court for the Southern District of Indiana, Indianapolis Division, at the United States Court House in the City of Indianapolis, Indiana, on the 15th day of December, 1958, at 9:10 o'clock A. M., CST, the above-entitled cause came on for trial before the Honorable Cale J. Holder, Judge of the said Court, and the proceedings had upon the
3 trial are in the words and figures following, to-wit:

• • • • •

7 The Court: Now, Mrs. Hadley, I am tendering to you a motion of the plaintiff dated November 15, '58 which you will prepare an entry on. It has been withdrawn this date by the plaintiff.

The next matter we have here, gentlemen, is a motion
8 by the plaintiff for an order to compel compliance with Paragraph 5 and 6 for order of production of documents under Rule 34 or in the alternative to produce papers and records claimed to be privileged for the Court's determination. This motion was filed November 14th also.

Mr. Meroni: That's right, your Honor. This is still pending.

The Court: I will hear your argument on that.

Mr. Meroni: All right, your Honor.

The Court: I have gone through your briefs.

Mr. Meroni: I am advised by Counsel that he has here the papers that are in dispute and he is willing to tender them to the Court for the Court to determine whether they are privileged, and that would be the motion. Our motion was to have them produced so the Court could determine whether or not they were privileged.

The Court: I don't know that that would quite level it

off. Your motion is in the alternative. First you put it square up. You have a motion for production.

Mr. Meroni: That's right, your Honor.

9 The Court: Do you want to withdraw that and leave it stand on your alternative motion? Your alternative motion is they be produced and shown to the Court in camera.

Mr. Meroni: I think I will withdraw the original motion for expediency and rely on the alternative one, your Honor.

Mr. Hume: That is based on the defendants voluntarily offering to present these papers to the Court and we tender them at this time, your Honor.

The Court: Mrs. Hadley, the first segment of this motion of November 14th by the plaintiff entitled "Motion for order to compel compliance with paragraphs 5 and 6," I will give this to you in a minute here.

The Clerk: All right.

The Court: Of the order for production of documents under Rule 34 that has been withdrawn.

Mr. Meroni: That's right, your Honor.

The Court: Let the record show, then, in connection with the alternative motion of November 14th the defendant now tenders—and I wonder if we shouldn't just have that identified by the Reporter here at this time as an exhibit.

10 (The Defendant, for purposes of identification, handed the Reporter a certain document for marking, and which was by said Reporter marked Defendant's Exhibit 1 in 42 pages.)

Mr. Hume: The record may show this as a group of documents that have been held together with a clip. They are all here, the type we have in the categories requested.

The Court: Exhibit 1 consists of 42 pages and you have initialed each page, Mrs. Liggett?

Mrs. Liggett: Yes.

The Court: Gentlemen, I wonder if it would not facilitate matters if I deferred ruling on the alternative motion until recess. Will you need the exhibits in the meantime?

Mr. Meroni: No, we do not need those until we reach our anti-trust case.

The Court: I will attempt to handle that on recess.

* * * * *

71 The Court: All right.

Gentlemen, during the recess I have reviewed the Exhibit 1 which was tendered by the defendant here voluntarily on the issue of the motion, the alternative motion pertaining to the production of documents there under the Rule 43 and the objection of the defendant thereto on the ground they were privileged. And the Court concludes that the exhibits tendered, the exhibit tendered consisting of 42 pages, are privileged communication between Counsel and the defendant and the motion for production is overruled. In this connection, however, I would call upon the defendant to assert of record in good faith that the tendered exhibit comprises the entire record of communi-

72 cations requested by the motion.

Mr. Hume: We make that representation in good faith, your Honor.

The Court: All right, sir.

* * * * *

226 DR. EMERY P. MILLER, a witness called by the defendant, being first duly sworn, testified as follows:

Direct Examination by Mr. Hume.

* * * * *

240 Q. Have you any knowledge as to what the correct size of paint particles is in the matter of producing a satisfactory coating of commercial painting?

A. For a satisfactory coating on an object like a refrigerator, for example, the particles would have to be of the order of approximately three mills or three one-thousandths of an inch in diameter.

Q. And are such particles produced by the compressed air type of gun that you have described?

A. In a compressed air type—in the spray produced by a compressed air gun that would be particles of that size and distributed above and below that.

Q. How much of a range can one tolerate in conducting a painting operation with respect to the particle sizes?

A. Generally I don't think that you would want to go much above possibly two or two and a half times as large as that, and certainly you wouldn't want to go much smaller than one-third that size. If you did you would obtain dry spray if the particles were quite small. If you went into the large side you would obtain what is known in the trade as orange peel or roughness of the finished
241 surface.

Q. Is the roughness that you have referred to productive of a satisfactory coating in commercial operations?

A. Generally speaking that is not—a large amount of this orange peel or a large amount of this roughness is not a desirable feature.

* * * * *

252 Q. Now, Dr. Miller, will you please refer to Exhibit No. 7 and tell us first what the coloration is on the drawing and what the significance of the coloration is?

A. This coloration has been added, as I understand it, to make the various components of this system stand out more clearly. The orange coloring is to represent the conveyor or the handling device for the parts, which are blue.

The green is added to show the high voltage supply and the conductor of the high voltage to the electrostatic
253 field which is also at high voltage. The yellow also represents the paint or fluid supply system. The brown is the air system. That is the atomizing air system.

The violet or purple is the air operating system which retracts the triggers or the valving mechanism of the gun. I believe those are the colors which are shown on this drawing.

The Court: You haven't named the color of the gun.

The Witness: It is red, sir.

Q. Now, you said this Exhibit 7 is a reproduction of a drawing in one of the bulletins of the Ransburg Company. Was the coloring on the drawing in the bulletin?

A. The coloring was not on the drawing in the bulletin.

Q. That has been added for visual aid in this suit, has it not?

A. That is correct.

Q. Now, will you proceed to describe what is shown in Exhibit 7 and tell us how it works, please?

A. This is a representation of a typical No. 1 electrostatic spraying process in which a pneumatic type gun or guns are used to break up the material and the electrostatic fields are used to precipitate that liquid on the objects to be coated.

254 In this particular arrangement the entire system is housed in an enclosure which is intended to confine

the spraying operation. The parts are hung on the conveyor by means of attachment hooks and part of that attachment hook is a spinner or rotating device. As the part moves into the enclosure, it makes a righthand turn and comes out toward the open front of the enclosure and that open front of the enclosure is diametrically opposed to the exhaust plenum chamber which is at the back of the enclosure and which, in turn, is connected to the stack part.

Inside of the enclosure there is located an electrode system which is designated as D. That system consists of a series across which is stretched a series of fine wires and it is located in this particular exemplification of it on the two sides and bottom of the article as the articles are carried through the spray zone and that area immediately below the conveyor, there is a rub rail "T" which is arranged to contact the rotators on the conveyor, and thus by virtue of the motion of the conveyor, the parts are set into rotation as they are carried across that particular portion.

Now, if the articles have been carried into the enclosure, then there exists between the articles and the electrode system a space, and by virtue of electrically connecting the voltage supply, G, by way of conductor, H, to the electrode system, there may be maintained across that space an electrostatic field. In other words, the conveyor is charged to a high potential and the articles on the conveyor are at ground potential so there is a difference in potential between the two parts.

The guns are positioned at the exit end of the enclosure and are arranged to introduce the coating material into the space which exists between the electrode system and the articles on the conveyor. As mentioned previously, those guns are arranged to be remotely operated by a valve end. Triggering the valve, pulls back the trigger

and allows the coating material to flow out of the gun simultaneously with air and breaks the paint up into a spr .y or mist and the impulse imparted to that mist by the air flow carries it into the space between the electrode system and the article on the conveyor.

When thus introduced the particles become charged electrically to the same potential, the same electrical
256 potential.

Under the interaction on the charge off the electrode and the charge on the particles, the particles are pushed away from the electrode system and attracted to the object on the conveyor, so that instead of being carried by the air blast, they will now experience a force toward the articles on the conveyor and obviously, under that gross attraction of the article for the particle and for the repulse of the electrode system for the particle, they will accumulate on the object to a greater extent than would be possible by ordinary mechanical spraying methods.

The rest of the equipment on the diagram, the container, O, is the paint pot to which air pressure is applied raising the paint up through the yellow line to the fluid regulator, and that is the regulator which is of the diaphragm type in this particular illustration which is to control accurately the flow of the paint to the gun.

As I mentioned, the purple line is the operating air line which is simply high pressure used to retract the needle in the gun and allow paint to flow.

The electrical equipment, electrical controls located in this picture, this is actually a housing for relays and
257 other type of electrical equipment which is activated by the buttons when one wants to stop or start or turn on or off the electrostatic field in this case.

* * * * *

263 Q. Is there an electrostatic field in existence in Exhibit 7 when it is in operation?

A. There is, sir. There is an electrostatic field.

Q. Where is it, please?

A. It exists in the space between the electrode system and the object. Electrically this system you might visualize as coming from the ground through a visual source of voltage which is the transformer as the secondary, through a tube or valve tube which is essentially a two-element tube that acts as a rectifier, comes out to the high line and is applied to the grid system, and at that point if nothing else could happen the electrical voltage would build up on the grid and stop. That would be the end of it.

And by virtue of that induction there then appears on
264 the can the opposite potential by virtue of the fact that they are now connected to ground, the same ground as the other side of the pack, through the conveyor and its support hook. So that you have that circuit, ground, transformer, electrode system, space, can, pack, conveyor, ground. That is your circuit which represents electrically the circuit you are talking about, and the opening or the space in that circuit is the space across which you build up electrical potential or electrostatic field.

Q. Are there any lines of force in that electrostatic field?

A. There are, sir.

Q. And they extend from where to where?

A. Such lines of force would extend from the electrode system to the article on the conveyor.

Q. Can you be a little more specific in your reference to the electrode system? Exactly what element in this illustration of Exhibit 7 do you refer to when you say "electrode system"?

A. The electrode system itself would be the element which is designated as D. That is a framework on two sides and the bottom of the path of the articles on the
265 conveyor, and including the small wire elements. They

are necessary to produce a particular type of electrostatic field, namely, a charging field, so that these particles which are originally introduced as uncharged particles will become charged.

Q. Is the frame element a part of the electrode system?

A. The frame element is a part of the electrode system.

Q. Now, with respect to the electrostatic field and the lines of force in the field, how in relation to that is the paint projected by air guns?

A. In this particular situation the field would extend from the electrode system, extend along the small wires of the electrode system. I visualize it as originating there and extending to the surface of the article on the conveyor. The paint is introduced generally perpendicular to that extension and parallel to the path of travel of the article on the conveyor.

• • • • •

273 (By Mr. Hume.) I will show you the Exhibit 8-A which is the drawings 1 to 6 of the patent in suit '536 and ask you if you are familiar with that disclosure.

A. Yes, I am, sir.

Q. Will you tell us what that is, please?

A. This is a reproduction of the drawings which appear in a patent application filed by Al Starkey and Ed Ransburg and is intended to show certain modifications, some of which were conducted, some of which were not conducted, to illustrate the invention which they put forth in this particular patent.

Q. Do you understand how it works?

A. Yes, I do, sir.

Q. Would you please explain it to the Court?

A. In this arrangement it was part of our effort as we went along in development to get rid of the troublesome troubles which arose in the No. 1 process from having air in the whole picture and in the system, and this was a de-

vice invented primarily to allow the electrostatic field to be the only agency which would be responsible for the breaking up of the coating material, the driving of the coating material from the atomizer to the object and for precipitation of that material on the object.

* * * * *

299 Q. In the Starkey-Ransburg Patent in suit, as represented by Exhibit 8-A and Exhibit 8-B respectively, what is the characteristic of the feeding of material to the atomizing zone?

A. Well, that is a regulated supply, wherein the material is fed to the atomizing zone at a controlled rate, which rate is the same as the rate at which the field takes that material away.

Q. And as to the extent of the atomizing zone.

A. The extent of the atomizing zone, of course, is distributed throughout the area where that liquid is fed to, and is generally an extended, stretched out arrangement, so to speak.

Q. What is the fact as to whether the entire cross-section, we might say, of the field at the atomizing head end of the field is supplied with paint or coating material?

A. Well, under these circumstances the entire field will have injected into it or will pick up from the site of
300 atomization particles of coating material and thus the entire field between the object and head, for example, as shown here in Fig. 1, will be filled or saturated, so to speak, with the small particles which originate at the site of atomization.

Q. What effect, if any, does this have on the character of the coating that is applied to the article being painted?

A. Well, obviously, this would result in a uniformly distributed deposition of these small particles over the surface of the object being painted.

301 Q. What would be the shape and size of the pattern of the application of the paint that was so distributed?

A. The shape and size of that pattern would be many times larger than the shape and size of any one individual atomization site.

Q. How would the shape and size of the pattern compare to the shape and the size of the article that was within the influence of the field?

A. That would be comparable to the size of the article actually. If the article had a field which completely covered it, the pattern would be again the size of the article or the size of the field.

Q. How about the shape?

A. The shape of it would be the same as the shape of that.

Q. Is there any wraparound effect occurring in the operation of the No. 1 type of system?

A. Yes, sir.

Q. Is that different from or the same as the wraparound you have talked about in connection with the patent in suit?

A. In the case of the wraparound which is effected by the No. 1 process, that wraparound which is created by the electrostatic field, you have basically the same elec-
302 trical phenomena except in the case of introducing the spray into the field, you have the problem of getting the particles on to the lines of force so that they then can obey the dictates of those forces and wraparound on the back surface of the article, whereas in the Starkey case they actually originate at the site of atomization, at the point of origin of the field, and are automatically, so to speak, predestined to follow a line of force.

304 Mr. Hume: I will ask the Reporter if he will please mark this physical exhibit as Defendant's Exhibit No. 9 for identification.

(The defendant, for purposes of identification, handed the Reporter an object for marking, and which was by said Reporter marked Defendant's Exhibit No. 9.)

Mr. Hume: And I will ask the Reporter to kindly mark the four photographs which I now hand to him as Defendant's Exhibits 10-A, 10-B 10-C and 10-D respectively for identification.

(The defendant, for purposes of identification, handed the Reporter four photographs for marking, and which were by said Reporter marked Defendant's Exhibits Nos. 10-A, 10-B 10-C and 10-D.)

Q. Dr. Miller, I will ask you if you will examine Defendant's Exhibit 9 and tell me, if you know, what it is?

A. Yes, this is the device which was built in our laboratory to effectively reproduce a showing of the patent, Starkey Ransburg patent.

Q. As represented in what drawings of what exhibit?

A. This was an effort to take—

Q. (Interposing.) What are the numbers of the figures?

305 A. Figure 5 of Exhibit 8-A, and attach that type of head to a handle such as shown in Figure 3 of that same exhibit.

Q. Well, now, would you tell us how that is made, please?

A. This was made as near as possible to the scale of this drawing and this particular device is made by taking a container and threading in an inserted fashion into the bottom of that container the spaced cylindrical pins, and openings have been provided between each of the pins at the base where they are attached to the container in order to

effectively simulate a situation such as shown in Figure 5 of Exhibit 8-A.

Q. Did you have anything to do with the construction of that device? Was it done under your supervision?

A. Yes, it was done under my supervision.

Q. Now, do I understand that those pins are screwed into a plate?

A. Yes, whereas in the case, the patent described then as being cylindrical pins which are compressed between the side walls of the container and the central separating wall and it becomes more easy to make it in this fashion. The machining of it is easier if done in this manner, so here each of the pins are screwed into the bottom 306 surface of the triangular container.

Q. Do these differences that you have pointed to involve any fundamental differences in construction?

A. No. Fundamentally this is a construction which was very closely or would very closely approximate the one shown in Figure 5.

Q. Would it in any way affect its operation as far as you can see?

Mr. Meroni: Objected to as leading. The exhibit speaks for itself.

The Court: It would be leading, would it not, sir? I will sustain the objection.

Mr. Hume: All right, Your Honor.

Q. Would you compare, as far as you are able to, in your judgment the operation of the device you hold in your hand and the one shown in Figure 5 and Figure 6 of Exhibit 8-A?

A. The operation of this device which I hold in my hand and which is designated as Exhibit 9 would in all essentials be the same as the operation of the device shown in Figure 5 of Exhibit 8-A.

Q. Does the device which has been marked for identifi-

cation as Defendant's Exhibit No. 9 have any relation
307 to the device that was demonstrated to the Court on Monday of this week in connection with this suit?

A. This is the identical device which was shown at that time.

Mr. Hume: Your Honor, I offer Exhibit No. 9 into evidence.

(DEFENDANT'S EXHIBIT NO. 9 offered in evidence by Mr. Hume.)

Mr. Meroni: Objected to as being insufficiently proven, not being the best evidence, as not corresponding to any disclosure made, any disclosure in the patent and is immaterial and irrelevant.

The Court: The objection will be overruled. Exhibit No. 9 is admitted and exhibited into evidence.

* * * * *

312 Q. I am going to hand you four photographs which have been marked for identification as Defendant's Exhibits 10-A, 10-B, 10-C and 10-D respectively, and ask you to tell us what they are, if you know.

A. Exhibit 10-A is a photograph of the device which has just been exhibited as Exhibit 9—side view, I might add.

Exhibit 10-B is a photograph of the end view of the atomizing head of that device. Incidentally, that photograph is enlarged over the original device itself.

Exhibit 10-C is a side view of that same atomizing device of Exhibit 9, and it also is slightly enlarged.

And Exhibit 10-D is a side view of that same device in operation showing the flow of the coating material
313 down the spaces between pins, the formation of the streamers and the atomization of the coating material out the end of those streamers under the influence of the electrostatic field.

Q. Incidentally, I don't think it has been mentioned here in this case,—what kind of current is used in the Starkey process and apparatus in suit, with respect to whether it is direct or alternating current?

A. It is direct potential and consequently will be direct current, as indicated in Figure 9 of Exhibit 8-B. There is shown there a transformer and then a rectifier tube indicating that the alternating current would be converted to direct potential.

Q. Will you explain for the benefit of the record what we mean by static electricity as compared to other forms of electricity?

A. Static electricity basically means electricity at rest. It has come to us in the art primarily from early history where the type of generation of static electricity was produced by rubbing amber and so forth with various materials, and so you had the possibility of charging bodies in space. You insulated them and put an electrical charge on them, and that charge existed as a static charge or
314 remained there. And it was called static because it appeared to remain at rest in one place as opposed to the kind of charges which you experience from dry cells or batteries where they flow through wires and light bulbs and that sort of thing. And that has been carried over in the art to designate any type of voltage condition where you have a charge placed on an object and that charge essentially remains intact with very little leakage.

Now, we know today, of course, that it is impossible, and was impossible even for the people of past history, to maintain a pure situation of static electricity because there were always conditions where the charge could leak off. It could flow down insulators or if the day was damp it might flow off the ground through the air. So that you have these small currents existing. And that same type of current exists here, even though we say we maintain a

static charge on the atomizing head. The fact that you have no electrical conductor, in the common usage of the word, between the atomizing head and the object, you have a very low current flowing across there. And we still call that a static situation, of course.

Q. Now, will you direct your attention once more to the Exhibit 10-D, which is the photograph showing the
315 paint flowing? How does this compare with what was demonstrated to the Court last Monday?

A. This is actually a photograph of a similar occurrence to what we saw at the demonstration.

Q. Does it differ in any way from what was demonstrated to the Court?

A. No, it does not.

Q. Is there any evidence here of the action of the force being exhibited on lines of force?

A. This was taken, of course, with the high voltage applied between the device and the article being coated and, as we noted here, the coating material actually becomes the furthermost part of this atomizing device once it is in operation, and becomes the electrode itself from which the field originates. And under the action of that field, which basically in this case is originating at the end of each of these streamers, these streamers are broken up into small particles which are evident on the picture and are projected into the field as small atomized paint particles.

Mr. Hume: Your Honor, I offer these exhibits, 10-A, B, C, and D.

(DEFENDANT'S EXHIBITS NOS. 10-A, 10-B, 10-C and 10-D offered in evidence by Mr. Hume.)

316 Mr. Meroni: Your Honor, I object to these exhibits as being immaterial, irrelevant and as being insufficiently proven. I further object to 10-B as embracing an

ex parte test or showing and as not being the best evidence.

The Court: Does your objection include the authenticity of the instruments—I mean, of the exhibits? Do we need to produce the photographer?

Mr. Meroni: I don't question that they are photographs of this device, Your Honor. Actually they are redundant, that is, Exhibit 10-A, B and C, because we have the device here. But 10-C which purports to show some action is some ex parte action that we weren't a party to, and I didn't see this when it was being done, and I object to it as not being good evidence.

The Court: I understand that you have no objection then to the authenticity of the four documents, and will not require the production of the photographer or the developer.

Mr. Meroni: That's right, Your Honor. That is not the ground of my objection.

The Court: What do you say about the objections?

317 Mr. Hume: Your Honor, this demonstration was made for the benefit of the Court. This witness is testifying here from his knowledge of this invention. He has testified that this exhibit, this model—that is Exhibit 9—was made inasfar as could be practical according to Figures 5 and 6. The exhibit is here to be witnessed by everybody. And the performance was demonstrated to the Plaintiff's counsel and to the Court, and this is to preserve the action under the testimony of this witness that was demonstrated.

Whatever objection he may have may run to the weight, but I don't think it runs to the admissibility.

Mr. Meroni: Do you contend, Mr. Hume, as to 10-C I actually saw this spraying when this particular picture was taken?

Mr. Hume: Well, I invited you to see it.

Mr. Meroni: I mean when this picture was taken.

318 Mr. Hume: No, you did not. The witness has testified it is the same activity and it is made on the same head. Now, this witness' oath is behind the similarity here, and there is no objection to the photograph itself.

The Court: You are referring to 10-D, aren't you? You have been referring to 10-C.

Mr. Meroni: Yes, Your Honor. I will withdraw my objection as to 10-A, B and C. My fundamental objections that I advanced in connection with Exhibit 9, of course, are preserved, Your Honor, and I assume that you would adhere to your previous position in overruling my objection in that respect as to these photographs, their merely being photographs of this same device. But I do insist on my objection as to 10-D on a different basis, and that is that it purports to show some action which was conducted when I wasn't there.

The Court: The objection will be overruled then and Exhibits 10-A, B, C and D are admitted in evidence.

* * * * *

373 Q. (By Mr. Hume.) Dr. Miller, have you had a drawing prepared to illustrate the system known as the No. 2 System of Ransburg employing bells?

A. I have, sir.

Q. I will hand you an exhibit marked Defendant's Exhibit 17-A for identification and ask you if that is the drawing.

A. This is the drawing.

Q. What does it illustrate?

A. It illustrates the elements involved in a typical installation of the No. 2 rotating bell system.

Q. How does the illustration contained in the drawing compare with the bell type of No. 2 system which was demonstrated to the Court on Monday of this week?

A. This system shown here would be essentially one half of the system which was shown in the demonstration; the other half being employed for the purpose of coating the opposite side of the panel. This certainly would be, however, an illustration of one half of the system which was used for coating one side of the panels.

Q. Would you explain the operation of the system shown in 17-A to the Court, please?

A. In this particular type of system the atomizer or the atomizing bell, as it is referred to here in Exhibit
374 17-A, consists of a bell shaped member or funnel type member which is mounted on a hollow shaft and arranged to be rotated by a motor so that the bell itself can be set into rotation about its central axis.

The bell, or in this particular showing a group of three such bells, are mounted in spaced relation to the blue article on the conveyor. Here again the bells are shown in red and the conveyor, as indicated here, in orange. They are spaced from the article on the conveyor in order to provide the space in which the electrostatic field will be eventually established. They are mounted on an insulated support so that they can be charged to a high potential by virtue of the power pack which is shown in green in this exhibit, so that the power pack when connected to the bells will establish the field that I spoke of between the front edge of the bells and the work on the conveyor.

Coating material is taken from a suitable supply, shown here in yellow, passed through a pump whose speed can be controlled so that it will be delivered to each of these bells individually at a controlled rate.

The operation of the whole mechanism is controlled
375 by means of remote push button stations, the control panel and the other electrical elements shown in this exhibit.

Now, the operation takes place in the following manner: the bells are set into rotation. The high voltage supply is energized so that they are placed in high voltage relationship with respect to the article on the conveyor. The pump is then started so that the coating material will be delivered at a controlled rate to the back end of the hollow shaft, to be carried through that hollow shaft and eventually exit on the internal surface of the rotating bell. The rotation will spread that around on the internal surface into a thin film and feed it into an extended distributed atomizing zone around the front sharpened edge of the bell.

The field then takes over and the particles are atomized and follow the lines of force across the space onto the article to be coated.

Q. Now, with respect to a single bell, is there an electrostatic field established?

A. Yes, there is an electrostatic field established from the front annular edge of the atomizing bell to the article on the conveyor.

Q. How is the paint presented to the electrostatic 376 field? In what form is it?

A. The paint is presented to the electrostatic field in the form of a thin, uniformly distributed film around the edge of the bell.

Q. And what causes the atomization of the paint?

A. The electrostatic field.

Q. Is there dispersion and conveyance of the paint?

A. Yes, there is dispersion of the paint and there is conveyance of the paint from the surface—from the edge of the bell to the article on the conveyor. And that is all accomplished by this electrostatic field, this single electrostatic field which exists between the two articles, the bell and the article on the conveyor.

377 Q. Is there a deposition of the paint?

A. It is deposited on the article by the action of the field.

Q. Taking any one bell, how many fields participate in that functioning of the atomization, dispersion and deposition?

A. Taking any one there is a single field that causes the atomization, dispersion and deposition of the coating material coming from that particular bell.

Q. How is the paint fed to the bell?

A. Paint is fed to the bell by a pump whose delivery is dependent upon its speed and whose speed is carefully controlled so you deliver paint to the bell at a controlled rate.

Q. What would be the fact as to whether the paint is fed when the electrostatic field is off and say the rotation of the bell is stopped?

A. The effect would be that the coating material fed to the bell under circumstances of no rotation, no electrostatic field, it would run out of the center orifice of the bell and down across the surface of the bell and drip to
378 the floor under the influence of gravity.

Q. What force feeds the paint from the time the paint enters the bell to the edge that you spoke of?

A. Now the rotation is responsible for the thinning out of the film and the carrying of that film from the orifice at the center inside of the bell to the outside edge.

Q. I asked you what force. Did you name the force?

A. That would be the centrifugal force.

Q. What would be the character of the shape of the paint material on the edge of the bell during atomization activity with the field on and rotation on?

A. The character of that coating material would be that it would exist as streamers extending outward from the edge of the bell and those streamers would be con-

tiguous liquid from the liquid on the surface, through the cusp or pyramid type of streamer to the end of that streamer and at that point the field has its origin and the coating material would be broken up into small particles and be distributed into that field and as we said, dispersed and deposited on the article.

Q. What would be the disposition of the paint ma-
379 terial between adjacent cusps?

A. There would be coating material existing in a curved surface type of arrangement from one cusp to the other.

Q. What is the economy of operating a system such as shown in 17A with respect to the paint that is sprayed?

A. In an arrangement of this type, essentially all of the coating material which leaves the atomizing device and therefore the coating material which leaves the pump or the source, all of that coating material, is deposited or collected on the article being coated.

• • • • •

380 Q. I now direct your attention to the drawing, 17B, and ask you if that is a drawing you had prepared to illustrate a Ransburg System?

A. This is a drawing which I have prepared to illustrate our reciprocating disc type No. 2 System.

Q. Tell us what 17B shows.

A. It shows the element of the typical reciprocating disc units as they are incorporated generally for a production operation. Actually, the parts on the conveyor have been left off in this circumstance in order to make the elements completely visible in this particular situation.

Q. Where would the articles to be painted appear on this drawing if they were shown?

A. They would be attached to the pendants which extend down from the orange conveyor and the conveyor passing in a loop around the atomizing disc, which is the

essential heart of the equipment, so to speak, and they would automatically preclude our seeing into that loop if we did not remove them from the conveyor as we have done here. It is also evident that some of these elements may be more or less far removed from the operation specifically, but in order to get them all in one drawing we have arranged them as we have in this particular situation.

382 Q. How does the disclosure Defendant's Exhibit 17B, compare with the reciprocating disc installation that was demonstrated to the Court last Monday?

A. This is essentially that type of a unit.

Q. The reciprocator is mounted on the floor in 17B, is it not?

A. That is correct, and in the demonstrations they were mounted overhead. Now that is a matter of convenience.

Q. Does that affect any difference in the operation or function?

A. No, it does not affect the operation or function of the equipment.

Q. Now, in this installation, 17B, is there an electrostatic field established?

A. Yes, there is an electrostatic field established by the power supply which is shown in green here, being connected to the red disc, atomizing disc and there would be an electrostatic field established between the disc element and the articles on the conveyor.

Q. How many fields are created?

A. In this particular case there would be one field created between the one disc and the numerous ar-
383 ticles on the conveyor as the loop was filled.

Q. What does the atomizing in the installation of the type represented in Exhibit 17B?

A. The electrostatic field.

Q. What does the function of the rotation of the head or disc, as it is called?

A. The rotation of the disc is for the purpose of taking that material which is introduced to the hollow shaft and exists at the center of the disc, taking that material and spreading it into a film over the surface of the disc and conducting or conveying that film, while in contact with the disc, to the outside edge of the disc.

Q. Did you see, on the occasion of the demonstration to the Court, the action that occurred when the rotation of the disc was discontinued but the electrostatic field remained on?

A. I did, sir.

Q. What happened?

A. Since the disc was mounted from overhead, and the coating material fed therefore at the top of the hollow shaft, the coating material ran down through the
384 hollow shaft, and, so to speak, just ran out of the center orifice onto the floor directly below the center of the disc.

Q. Can you explain why no atomization occurred at that time?

A. There were basically two reasons. There was no feeding of the liquids from the center orifice to the outside edge of the disc and no distribution of that material over the surface of the disc because there was no rotation, and in addition, the field was not on, so that there obviously was no atomizing force,

Mr. Meroni: I move to strike the last part of the answer because the question was based on the atomizing field being on and the witness now qualified it by saying the field was off and my recollection is the field was on.

Q. My question, I am sorry, was supposed to be related to the situation where the rotation was discontinued but the electrostatic field remained on.

A. In the case where the electrostatic field was on,
385 and the rotation was stopped the coating material still ran out of the center orifice and collected on the floor below the disc, ran out in the form of a stream.

Q. Now, I would like to know under those same circumstances, why that occurred and why there was no atomization?

A. It occurred primarily because there was no centrifugal force to distribute the film to the atomizing zone around the outside edge of the disc.

Q. When there was no feeding of the material to the edge, due to the disc being stationary, where was the electrostatic field in that arrangement?

A. The field was between the edge of the disc and the articles on the conveyor.

Q. And under such circumstances where is the atomizing zone?

A. There would not be any atomizing zone.

Q. Where must you put the paint to present it to the atomizing zone?

A. You would have to put it at that edge of the disc where the field originates.

Q. And what happened when the paint did not get to the edge by virtue of the disc being stationary?

A. Under those circumstances, the field would not act on it and would not atomize it.

* * * * *

389 Q. Now, are there—I withdraw that.

Is there any response in the system of Exhibit 17-A which is brought about through the action of what we have called "lines of force" here?

A. By "response" what do you mean, sir?

Q. Is there any behavior there that is dictated by what we have called "lines of force" in this?

A. The behavior which is dictated would be the behavior of the particles which are formed at the liquid surface as it is presented to this field; namely, the surface would be drawn out into liquid streamers and from the end of those streamers you would have particles formed, atomized particles, which would be introduced and distributed into the field; would be directed by that field toward the article and would be deposited on the article.

Q. What would be the situation with respect to the various lines of force throughout the whole entire edge of the bell? Would the action be the same or different?

A. The action would be the same throughout every length of the—for every unit length of the bell circumference.

Q. You stated there were streamers that would be formed on the edge of the bell shown in the Exhibit 17-A.

What is the fact as to the formation of the paint on 390 the edge of the disk in the device of 17-B?

A. The same situation would be existing. There would be streamers formed at the edge of the disk which would extend out into the space immediately adjacent that edge, and those streamers would be formed by the field and atomized particles required for painting would emanate from the end of those streamers.

Q. With respect to 17-A is there any compressed air involved in its action?

A. No, there is no compressed air used in 17-A.

Q. How about the device of 17-B?

A. There is none used in the device of 17-B.

Q. I mean in the atomizing action; I don't mean in the operation of some valves or other.

A. That is correct. There is none in connection with the atomizing action.

Q. Now, I will show you another drawing that is marked 17-C and I will ask you if that is a third drawing that was

prepared by you to illustrate one of the Ransburg airless type of systems.

A. Yes, this is such a drawing that I had prepared to illustrate a stationary rotating disk-type unit in which the disk is tilted. I mean by "stationary" it is not
390 reciprocated but permanently mounted on a stand of fixed height.

Q. Without duplicating any reference to the parts that are similar in the two illustrations, Exhibit 17-B and 17-C respectively, would you just tell us what is shown there and compare it with the system of 17-B which you have already described.

A. In 17-C the elements are essentially the same as those shown in 17-B with the exception of the fact the disk or—atomizing disk and disk rotator are mounted on a support of fixed height and therefore—as opposed to being mounted on a reciprocating mechanism as shown in 17-B. As indicated, this disk can be mounted from above or below. In the dotted figure it is shown as being mounted above. In the full figure it is shown as being mounted from below. Now, the disk is tilted basically to increase its pattern or the width of the pattern which it can apply to the surface of the articles that are carried around the loop.

Q. What would be the characteristic of that disk with respect to the streamers you have talked about in connection with the other disk in Exhibit 17-B?

A. This disk would function, as far as the formation of the streamers are concerned and the action of the
392 field on the formation of those streamers and atomization of the particles, it would function in exactly the same sense as that one shown in 17-B.

Q. Your answer was addressed to the showing in Exhibit 17-C?

A. That is correct, sir.

Mr. Hume: Your Honor, I offer in evidence the drawings that have been marked for identification as Exhibit 17-A, B and C as Defendant's 17-A, B and C.

(DEFENDANT'S EXHIBITS 17-A, 17-B and 17-C offered in evidence by Mr. Hume.)

Mr. Meroni: Object to them as being immaterial, irrelevant, incompetent because the Starkey, et al. Patents in suit presumably are concerned with the establishment of electrostatic deposition by the use of a field alone and are not concerned with electrostatic depositions making use of additional means such as air or rotary impellers.

Mr. Hume: Your Honor, there is no air here. The witness has testified to that.

Mr. Meroni: These are rotary impellers; they are not embodiments of the invention.

Mr. Hume: The witness testified that the rotary
393 impeller is just a matter of forced feeding which is called for in the patent in suit and the atomization is the result exclusively of the electrostatic field, so that the plaintiff's position here—the defendant's position here is that these are embodiments, full embodiments of the invention of the patents in suit.

Mr. Meroni: If your Honor please, in arguing for the allowance of the Starkey Patent it was pointed out that the heart of the applicant's invention lies in the spray painting of articles of manufacture by the use of single electrostatic field which will both atomize a liquid coating, disperse the atomized particles, and deposit the particles on a surface to be coated. The demonstration of these machines clearly establish if you did not have the rotary feature the field in itself would not effect deposition on the articles.

Mr. Hume: Your Honor, the patents provide as a necessary step the feeding of the paint and necessarily the system will not function if the paint is not fed, and we have

used pumps in some of the systems as shown in the patent, and this system, we use a pump plus centrifugal force purely for feeding forced feeding. This witness just
394 testified it was a single field that was responsible for the atomization, dispersion and deposition.

The Court: The objection will be overruled. 17-A, B and C are admitted and read and exhibited in evidence.

* * * * *

395 Q. (By Mr. Hume.) I will ask you to hold in your hand Defendant's Exhibit 3 and 4 respectively and to take figure, or, Exhibit 3, if you will please, and turn to column four thereof in Claim 1 of the patent, this being the method patent No. 536, and I will refer to certain nomenclature and terms that are used in this patent and I will ask you whether or not in view of your understanding of this art and the meaning of these terms that are employed you find the elements which respond to the terms, and if so, point them out. First, I will ask you if in the disclosure of the method patent 536, Exhibit 3, a method is disclosed for electrostatically distributing liquid as a coating.

A. That is correct, sir.

Q. Now, do you find there the step of supporting liquid coating material in spaced relation to the surface of the article?

A. Yes, that coating material is supported, referring to Fig. 8-A, along the front exposed edge of the atomizing head, 13, in Fig. 1.

Q. I am going to go back and ask you now to look at the plaintiff's system as it's been illustrated in Exhibit 11-A and ask you if that discloses a method for elec-
396 trostatically distributing liquid as a coating on an article.

A. It does, sir.

Q. Now, does that provide the step of supporting liquid

coating material in spaced relation to the surface of an article?

A. Yes, it does, sir, along the open or unrestricted edge of the atomizing head.

Q. In looking at the disk commercial system of the defendant, shown in Exhibit 17-B, and the bell type shown in Exhibit 17-A, does the disk type of 17-B show a method for electrostatically distributing liquid as a coating on an article?

A. It does, sir.

Q. How about 17-A?

A. It also shows such a system.

Q. And in the disk system of 17-B is there means for supporting liquid coating material in spaced relation to the surface of an article?

A. That is correct.

Q. What is the meaning there?

A. It means at the edge of the atomizing disk, the disk itself supports a film of coating material and in the case of the bell type in 17-A, that film of liquid is similarly supported by the bell on its inside surface.

Q. What determines the position of the article 397 being coated?

A. The location of the conveyor determines the position of the article being coated in this particular case.

Q. Is that true of the patent in suit, Exhibit 8-A?

A. That is correct, sir.

Q. What color is the conveyor there?

A. The conveyor is shown as orange and designated as "11" in Fig. 1.

Q. What is the color of the conveyor in 17-B and 17-A?

A. They are likewise shown as orange.

Q. Now, are the articles spaced from the supported paint in the plaintiff's system, as shown in 11-A?

A. Yes, the article is spaced from the point of support of the liquid.

Q. Now, I will call your attention to this language, "forming a spray by electrically atomizing such coating material from a plurality of points so closely spaced as to form substantially a continuous extended atomizing zone;" and first of all, do you find anything that responds to that in the disclosure of the method patent, 8-A?

A. Yes, such an extended atomizing zone is formed along the front edge of the device, 13, as shown as extending along its entire length.

Q. Now, would you find any response to the provi-
398 sion in figures 5 and 6 of Exhibit 8-A?

A. In figures 5 and 6 the extension would be along the length of the atomizing head again and would be along the length of the projections which are shown as 217 in the drawing.

Q. Now, does Exhibit 10-D bear any relation to what you have stated the conditions to be in the operation of figures 5 and 6 in Exhibit 8-A?

A. It does, sir, and the extended zone from which such atomization takes place is clearly shown on this picture.

Q. Now, do you find anything that meets that, or responds to that term, in the plaintiff's construction 11 in Exhibit 11-A?

A. Yes, in Exhibit 11-A that extended atomizing zone would be that zone which comprises the radiating dark lines in the figure 11-A as they extend outward from the red atomizing head.

399 Q. Looking for the moment at Exhibit 11-B, do you find anything there that illustrates closely spaced points distributed relative to the article's surface?

A. Yes, in so far as Figure 2 in Exhibit 11-B is concerned, there is shown there at least in part the type of thing which exists over the extended atomizing zone in this

device; and the black continuously colored extensions on the atomizing head are such atomizing points, plurality of points.

Q. Just as an expert in reading drawings, is there anything significant to the fact that there is space above and below these one, two, three, four, five streamers shown in the upper right-hand figure of 11-B, and only five are shown? Is there any significance to that in reading the drawing?

A. My conclusion would be that throughout that area the atomization or these individual points are distributed. It might well be interpreted that that is the end of it or it could be likewise interpreted that that would continue throughout the entire atomizing zone or the exposed edge of the disk emitter.

Q. Well, what would be the extent in length around the perimeter of the head or the appearance of the
400 streamers in relation to the opening that was provided by the spacer inside?

Mr. Meroni: I would like the record to show, Your Honor, that in presenting the question counsel pointed his glasses up and down across the two illustrations above Figure 2 on Exhibit 11-B.

A. It would indicate that the atomizing zone, the plurality of points, are distributed along the same area to which coating material is fed by virtue of the absence of the spacer—I'm sorry. I forgot what it is called technically.

Q. What is the fact as to whether there is anything to be found in the Exhibit 17-B to the language that I read about the points so closely spaced to form a substantially continuous extended atomizing zone, said points being distributed relative to the article surface?

A. In 17-B those points will be distributed around the edge of the disk, around its entire circumference, and cer-

tainly they would be distributed therefore with respect to the surface being coated.

Q. And what about the system of 17-A, the bell system?

A. Likewise the points would be distributed around the circumference of the front edge of the atomizing bell.

401 Q. Now, the claim continues with this language: "Electrostatically dispersing the discrete coating-material particles formed at each point of atomization."

Do you find any response to that in the patent system shown in Exhibit 8-A?

A. Yes, such dispersion is indicated by the small multiple streamers which extend out from the atomizing head and indicated at 17, I believe, in Figure 1 of Exhibit 8-A.

Q. What does the patent itself say, the specifications?

A. The specifications say that you need such dispersion and that you need spacing in which to allow that dispersion to take place.

Q. Do you find any response to that in the plaintiff's system illustrated in Figures 11-A and 11-B?

A. In Figure 11-B the dispersion which takes place at the end of the streamers certainly is shown as the dotted lines indicating atomized charged particles open up and spread as they pass out and away from the end of that discharge streamer.

Q. I think I said "figures." I meant to say "Exhibits" in my last question.

Do you find any response to that provision of the 402 claim in the system shown in Exhibit 17-B?

A. The actual showing in 17-B does not specifically show the existence of that dispersion, but such dispersion does exist in the operation.

Q. Where is it found in the system as operating and as represented by this drawing, that is, the system represented by Exhibit 17-B?

A. It is found to exist between the edge of the atomizing

bell and the surface of the article on the conveyor, as the article is carried past the atomizing bell in 17-A, and it is further found at the edge of the disk and between the edge of the disk and the article on the conveyor as those articles are carried around the loop in the modification shown in 17-B.

Q. Now, the claim says: "Electrostatically depositing such dispersed discrete particles and while still in liquid state on the article surface to form a finished coating."

Do you find any response to that provision of the claim in the system of Exhibit 8-A?

A. The intent of the patent shown in Exhibit 8-A certainly is to form a coating on the article, and the specification describes that the particles formed and dispersed
403 by the electrostatic field are deposited on the surface of the items, such as the blue can tin, as a film to form a finished film on the surface of the article.

Q. Do you find any response to that provision in the plaintiff's system illustrated in Exhibits 11-A and 11-B respectively?

A. Yes sir, there is indicated in the Figure 11-A that the article is being coated by the dispersed material emanating from the atomizing head, dispersing in the space and collected on the article being coated.

Q. Does that occur in the operation of the plaintiff's system as you have witnessed it to produce a finished coating which is still wet when it is deposited?

Mr. Meroni: Objected to as leading.

Mr. Hume: I will change the question.

Q. (By Mr. Hume.) What is the state of the liquid coating on the article as it is applied in the plaintiff's system as you have witnessed it in operation?

A. The coating material lands wet on the article.

Q. Is the deposition in a wet state of any significance in making coatings?

A. It is all important in connection with the applica-
404 tion of sprayed coating by virtue of the fact that a sprayed coating is the integrated result of the arrival on the article of many small discrete particles, and obviously if the first arrived particles were not in a liquid state when the second arrived particles sat down on top of them or adjacent to them there would be no opportunity for those particles to coalesce, flow out and form a continuous film which would be satisfactory for paint.

Q. Now, do you find any response to the electrostatically depositing dispersed discrete particles while still in a liquid state on the article in the Ransburg bell type of commercial device shown in Exhibit 17-A?

A. Yes sir, that is a system for producing finished coatings, and obviously, as I have mentioned, it is of necessity that the coating material paint arrive on the article in a liquid state so it has this opportunity to flow out and form such an acceptable painted surface. The same thing exists in the case of the disk device, 17-B.

Q. Now, the claim says: "Force feeding coating-material to the points of atomization at a controlled substantially uniform rate to maintain thereat a supply
405 of coating material for atomization."

Do you find any response to that in the plaintiff's patented construction shown in Exhibit 8-A—system, I should say.

A. In Exhibit 8-A the coating material is fed to the site of atomization by virtue of the hydrostatic pressure which exits to the differential and head through the containers 18 and the point of exit on the atomizing device 13, and it is significant to me, at least, that the containers are broken up into three containers so that the differential in that hydrostatic pressure will not be sufficiently great to allow any one portion of the head to get out of step with regard to any other portion of the head.

Q. Do you find any response to the provision I read about force feeding the coating material in the plaintiff's system as illustrated in Exhibits 11-A and 11-B?

A. It is indicated that there is a liquid coating material supply tube which in one of the exhibits, I believe, introduced, has a needle control. I am sorry, it's 11-B. It's the one here on the floor. Has a needle valve whose purpose is to introduce the coating material to this device at a controlled substantially uniform rate.

406 Q. Is there any response to that element or step in the bell type of commercial device of the Ransburg Company as shown in Exhibit 17-A?

A. In Exhibit 17-A the pump provides the control means whereby coating material is delivered at a definite rate.

Q. How about the disk type, Exhibit 17-B?

A. The pump likewise in that system provides such control.

Q. Then the claim continues to say: "Said atomization, dispersion and deposition all being effected in quiescent air by a single electrostatic field maintained between the supported coating-material and the article surface."

And before you answer that I would like to have you define for us, please, what quiescent air means to you.

A. In the sense of this specification, and from having read this specification, the term "quiescent air" would mean to me an absence of any air movement in the area between the atomizing device and the article being coated, which air would be responsible for carrying away from the process due to its excessive motion any particles from the atomizing device, or in their flight of those particles from the atomizing device to the article.

407 Q. Do you find any response to the provision that I have read in the patented system shown in Exhibit 8-A?

A. Yes, there is no indication of any air, compressed

air, any excessive air movement in the device shown in Exhibit 8-A.

Q. Well, I want to call your attention to the entire statement. It says: "Atomization, dispersion and deposition, all being effected in quiescent air by a single electrostatic field maintained between the supported coating material and the article surface."

A. Yes, my answer was only half responsive. There also exists in Figure 1 of Exhibit 8-A the single electrostatic field maintained between the supported coating material on the atomizing head indicated at 17 and the article on the support.

Q. Do you find any response to that provision involving the single electrostatic field and the quiescent air in the plaintiff's system illustrated in Exhibits 11-A and 11-B respectively?

A. Such a single electrostatic field exists between the atomizing head and the article being coated, and there is no evidence of any added air movement taking place in this device.

408 Q. Now, I am going to ask you to go back a minute to the provisions before where we talked about force feeding coating material, and I am going to direct your attention to the bell type of commercial system of the defendant shown in Exhibit 17-A.

What are the provisions there for force feeding the material as called for in this provision of the claim,—that is, force feeding coating material to the points of atomization at a controlled substantially uniform rate to maintain thereat a supply of coating material for atomization?

A. The pump will supply to the back end of the hollow shaft coating material at a constant substantially uniform rate, and at that point the rotation of the atomizing bell centrifugal forces which are active on the coating material

due to the rotation will take over and spread and extend that coating material out into a thin, uniform layer forcing it to move from the central point of the atomizing bell to the outside edge.

Q. What is the significance in response to that question with respect to the system of Exhibit 17-B?

A. In the case of Exhibit 17-B the coating material is again pumped to the hollow shaft of the disk—the
409 hollow shaft on which the disk is mounted, at a controlled rate by virtue of the constant speed of the pump, and at that point the coating material exits onto the surface of the disk and the rotation takes over to force that material to flow out into a uniform film and move from the center of the disk to the outside edge where it appears at the site of the atomization as a thin, uniform film.

Q. The claim further characterizes the process as follows: "The distance between the article surface and the supported coating material being many times greater than the distance between adjacent ones of the points at which atomization of the coating material takes place."

Do you find any response to that provision in the process of Exhibit 8-A?

A. Yes, as shown in Figure 1 of Exhibit 8-A, the distance between the article surface and the supported coating material is obviously many times greater than the distance between the adjacent points 17 appearing on the front head of the atomizing head.

Q. What is the significance with respect to that provision in connection with the plaintiff's system shown in Exhibits 11-A and 11-B respectively?

A. As shown in 11-B the sites of atomization or the points certainly are much smaller, much closer spaced
410 together, I should say, than the distance between the atomizing edge and the article being coated.

430 Q. Will you turn, please, to the patent, Exhibit 4, which is the apparatus patent, 417; and I will direct your attention to Claim 4 thereof and ask you to note that this is apparatus as distinguished from process, and there will be elements instead of steps. I will ask you if in the illustration of that patent you find apparatus for electrostatically spray-coating an article? Do you find that?

A. Certainly in the patent there is an apparatus shown for electrostatically spray-coating an article.

Mr. Hume: I might say, Your Honor, that I will continue to refer to 8-A and 8-B, if I may, for clarity of construction inasmuch as the drawings are identical in the two patents; whereas this particular showing in color, 8-A and 8-B, is of the method patent, it will suffice to illustrate the construction apparatus patent.

Q. Now, is the apparatus of the plaintiff as illustrated in Exhibits 11-A and 11-B an apparatus for electrostatically spray-coating an article?

A. It is such a device.

Q. And how about the three forms of commercial devices that have been illustrated here as Exhibits 17-A, 17-B and 17-C?

A. They are such devices.

431 Q. The claim continues: "Comprising an atomizing head."

Do you find that in the patent drawing of Exhibits 8-A and 8-B?

A. That is correct. Figure 1 of Exhibit 8-A, Item 13, is such an atomizing head.

Q. In what color is such an atomizing head shown in these drawings?

A. In these drawings that is shown as being red.

Q. Is that true for all the forms illustrated?

A. Yes, that is true.

Q. Do you find such a part in the plaintiff's construction, Exhibit 11-A and 11-B?

A. I do, sir.

Q. What color is it there?

A. Also red.

Q. How about the three commercial forms starting with 17-A?

A. The structure of the atomizing head is red in that particular drawing also.

Q. And how about 17-B and C?

A. 17-B and C likewise has such an element that is shown as red.

Q. Now, the claim continues: "Means for feeding liquid coating material to said head."

Do you find that in the patent drawings, Exhibits 432 8-A and 8-B?

A. Yes, there is a means shown in the patent drawings; Figure 1 of Exhibit 8-A, and that element would be the hose 19, that would be a means for feeding the coating material to said head, for example. And you might say the combination of the tank and the hose in that particular figure would suffice to meet this condition.

Q. How about the other figures on Exhibit 8-A?

A. In Exhibit 8-A that portion of the device would be indicated as the hose 119, for example, in Figure 3 which would certainly meet the condition of being a means for feeding liquid coating material to said head.

Q. How about Figures 5 and 6?

A. 5 and 6 are of the head themselves, and a means of feeding coating material to that head is not shown in this particular drawing.

Q. What does the patent teach with respect to that?

A. The patent teaches that there would be such a device such as 119 of Figure 3 or 19 of Figure 1 incorporated here to provide that means.

Q. Do you find any response to that element in the plaintiff's construction illustrated in Exhibits 11-A and 11-B respectively?

433 A. In 11-A and in 11-B there is shown in yellow a tube which is referred to as a liquid inlet tube which would be a means for feeding liquid coating material to said head.

Q. How about the commercial construction of the defendant illustrated in Exhibit 17-A?

A. A means for feeding liquid coating material to said head in this particular construction in 17-A would likewise be the tubes which extend from the pump and likewise from the coating material supplied to the pump, and then from the pump to the atomizing head; and they are shown in yellow on this particular drawing.

Q. How about the commercial construction illustrated in Exhibits 17-B and C respectively?

A. In Exhibits 17-B and C we likewise have shown in yellow a combination tank-pump tube arrangement which would be adequately complete to fulfill this means for feeding liquid coating material to the head.

Q. Now, the claim continues as follows: "Means including said feeding means for distributing coating material to an extended atomizing zone where it is atomized from a plurality of spaced points."

Do you find any response to that in the patented construction of Exhibits 8-A and B?

434 A. Yes, that would be the chambered portion of the atomizing head which would supply the means which in turn would include the tubes 19 and so forth as recited here for distributing the coating material to an extended atomizing zone, taking the material which comes in through tube 19, for example, and distributing it to that atomizing zone at the front edge of the atomizing head where it is atomized from a plurality of spaced points.

Q. Do you find any response to that provision of the claim in the plaintiff's construction of Exhibits 11-A and 11-B respectively?

A. Yes, the included feeding means would in this case, as shown in Figure 11-B—or in Exhibit 11-B—pardon me —would be the liquid inlet tube, and the means for distributing that coating material to an extended atomizing zone would be the respective passage created between the two disks in that portion which is not blocked out by the internal spacer. That combination would provide the element recited here which would be for the purpose of presenting the material to an extended atomizing zone where it is atomized from a plurality of spaced points.

Q. Where would you find in the plaintiff's device of Exhibits 11-A and B respectively an extended atomizing zone?

435 A. That extended atomizing zone would be the portion of the periphery of the slotted disk emitter which was opened, I might say quote unquote possibly, by the omission of the spacer.

Q. In describing the feature of the disclosure of Exhibits 8-A and B in response to my last question, re to "means including said feeding means for distributing coating material to an extended atomizing zone where it is atomized from a plurality of spaced points," do you find any satisfaction for that provision in that part of the disclosure which is represented by Figures 5 and 6?

A. Yes, the opening which is shown in yellow in Figure 5 and which is indicated as extending across the length of the atomizing device certainly would provide that distributing means for picking up the coating material that was introduced by a coating feeding means and distributing it to the extended atomizing edge—atomizing zone.

Q. Do you find any response to that provision in con-

nection with the commercial construction of the defendant illustrated in Exhibit 17-A?

A. Yes, that means would be the rotation of the atomizing head to provide a distribution of the coating material to the extended atomizing zone which exists around
436 the periphery of the atomizing bell, and that could be combined with the pump and the other elements discussed previously as being the means, including said feeding means for accomplishing that purpose.

Q. And where in that construction is the extended atomizing zone?

A. Around the periphery of the bell, the front edge of the bell presented to the article being coated.

Q. What is your answer with respect to the same question as applied to the constructions illustrated in Exhibits 17-B and C respectively?

A. The pump and the rotation likewise combine in these Exhibits 17-B and 17-C to provide the means described in this particular statement.

Q. Now, the claim continues: "Said points being sufficiently close together to permit the coating material to bridge the spaces therebetween."

Do you find any support for that statement in the patented construction of Exhibits 8-A and 8-B respectively?

A. In Exhibit 8-B certainly the points are shown as being close enough together to show the bridging—actually in Figure 7 of that Exhibit 8-B; and likewise in Figure 1 of Exhibit 8 the points are shown as being sufficiently
437 close together to provide such a condition.

Q. In that respect I will call your attention to the language of Claim 1 of the method patent, 536, which says: "A plurality of points spaced as to form a substantially continuous extended atomizing zone."

Do you place any different interpretation upon the lan-

guage of Claim 4 of the apparatus patent, 417, from that that I have just read to you from the method patent, 536?

A. No, I do not, sir, because, in order to form a continuous atomizing zone bridging is necessary so that you will get continuous and uniform feeding to the various atomizing points or sites.

Q. Do you find any response to the language that the coating material bridges the points in the plaintiff's construction as exhibited in Exhibits 11-A and 11-B respectively? Do you find any bridging there?

A. Such bridging exists and is shown between the discharge streamers in Figure 2 on 11-B; in particularly the lower figure of that exhibit.

Q. Referring to the lower right-hand figure of 11-B?

A. That is correct.

Q. Does that figure show bridging between the points of the material being atomized?

438 A. It does, sir.

Q. What is the fact as to whether or not you can find any response to that language in the commercial construction represented by Defendant's Exhibit 17-A—and I refer to the actual operation of the system?

A. In actual operation such streamers or atomizing sites exist on the front edge of the bell, as shown in Exhibit 17-A. And such liquid bridges from one atomizing point to the next at the base of the streamer.

Q. What is the answer to the same question with respect to the construction of Exhibit 17-B and C respectively?

A. Exhibit 17-B and C likewise in operation have between the adjacent streamers a bridge of liquid.

Q. The claim continues: "A support for supporting an article to be coated in spaced relation to said atomizing zone."

Do you find that in the patented construction of Exhibits 8-A and B?

A. Such a support exists in 8-A, Figure 1, and is designated as 11 in that figure. In Exhibit 8-B, Figure 8, the conveying device is shown as 311.

Q. Do you find any response to that element in the plaintiff's construction as illustrated in Exhibits 11-A and 11-B respectively?

A. There is no specific construction illustrated in
439 the drawing, but I presume such a construction would have to be necessary to support the article being coated and connect it to the ground.

Q. How about the construction of Exhibits 17-A, B and C respectively which represent various forms of the defendant's commercial construction?

A. Such supporting devices or conveyors as are indicated here certainly are shown and they are indicated in these three drawings as the orange elements.

Q. Now, the claim continues: "A means including a high-voltage source for creating over the surface of the article on said support an electrostatic field capable of atomizing the coating material into finely divided, electrically charged particles and electrostatically depositing particles atomized from said atomizing zone on the article while still in liquid state."

Do you find any response to that provision in the patented construction of Exhibits 8-A and 8-B?

A. Such means is certainly shown in Figure 1 of Exhibit 8-A as being the voltage supply. It is also shown in Figure 8-B—pardon me, Exhibit 8-B in Figure 9, the voltage supply there being indicated to establish such field.

Certainly that would be in those cases a means, includ-
440 ing a source of high voltage for creating over the surface of an article on the support such an electrostatic field.

Q. Well, does it create such an electrostatic field?

A. Yes, it does.

Q. And is the field capable of atomizing, and does it atomize the coating material?

A. Such field atomizes the coating material, atomizing the coating material into finely divided electrically charged particles, and electrostatically deposits those particles on the article while they are still in the liquid state.

441 Q. Do you find anything that responds to that provision of the claim in the plaintiff's construction of Exhibits 11A and 11B respectively?

A. Here also such a voltage is shown as connected between the ground and atomizing head or emitter to establish a field which would meet these conditions.

Q. What is the fact as to whether such a means is found in the construction of defendant's Exhibit 17A?

A. Here also a voltage supply or power supply, as designated on 17A, is also shown.

Q. And what does it do with respect to creating a field?

A. That power supply creates such an electrostatic field or electrostatic charge differential between the particles and the article of a strength to move the particles toward the article sufficiently rapidly to deposit them thereon while still in liquid state.

Q. What would be the answer to the same question with respect to the construction in 17B and 17C respectively?

A. Here also such a field is established by virtue of the disc being connected to the high voltage supply as shown.

Q. Now, the claim continues with the statement

442 "said atomizing head and support being so relatively disposed as to provide between the article and the atomizing zone a spacing great enough to permit substantial dispersion of the atomized particles by the electrostatic forces of the field." Do you find any response to that

characterization of the construction in the structure of the plaintiff's patent as illustrated in Exhibits 8A and 8B?

A. Such space is provided in the structure shown in Figure 1 of Exhibit 8A and also in the structure of Figure 7 of Exhibit 8B.

Q. Where and how is that space provided?

A. That space is provided between the atomizing head 13, and the article, 10, on the conveyor, 11.

Q. Now do you find any response to that provision in the plaintiff's construction exhibited in Exhibits 11A and 11B respectively?

A. In 11A that spacing or separation of the atomizing head and the supported article is certainly shown as existing between the red disc emitter and the article on the 443 conveyor being coated and in Exhibit 11B it is indicated as being sufficient by virtue or due to the fact that the actual dispersion is taking place off the edge of the discharge streamer.

Q. What is the fact as to that provision in connection with the construction of the defendant's commercial operation illustrated in Exhibit 17A?

A. Such spacing is provided by virtue of positioning the atomizing head in spaced relationship to the articles on the conveyor so that you have existing between the atomizing head and the support a sufficient spacing so as to provide between the article and the atomizing zone a spacing great enough to permit this dispersion that is referred to.

Q. What is your answer to the same question with respect to the constructions illustrated in Exhibits 17B and 17C respectively?

A. Such spacings are also provided in these devices shown in these two exhibits.

Q. Now, I want to direct your attention to the demon-

strations that were conducted Monday of this week and I want you to tell us, please, the voltages that were used in each test and the spacing between the atomizing head
444 and the article being painted in each case, if you know, and we will start with the No. 1 System that was the second demonstration we saw after the conventional compressed air hand gun.

The Court: Which exhibit is that here?

Mr. Hume: It would be the form of operation which is illustrated in Exhibit 7.

Q. What voltage was used in that demonstration?

A. In that particular demonstration a voltage of 90,000 volts was applied to the electrode system.

Q. And what was the spacing used between the electrode and the articles being coated?

A. In the demonstration which we saw on Monday, the spacing was in the order of 14 inches between the fine wire elements on the electrode system and the surface of the articles on the conveyor.

The Court: I know we have been referring to this demonstration and I recollect that the demonstration was part of the opening statement and not evidence yet. Do you want to make a record of that?

445 Mr. Hume: Well, Your Honor, in each instance I have had the witness tell us what occurred and I should think that the verbal representation of the demonstrations and supported by—

The Court: (Interposing.) We have three wheels of the car but the fourth one is the demonstration which is not in evidence. We have part of it in here but I don't know whether counsel here for the plaintiff wanted to stipulate that it be part of the evidence in this case, that demonstration, but as I understood it clearly was the opening statement.

Mr. Hume: There is no way we can preserve what was seen there short of a moving picture, I suppose, and I just use that reference to the demonstration to bring into focus the particular instance for the benefit of the witness and Court and all of us here. I think what happened has been pretty well represented in the language of the statements of the witness.

The Court: Well, I don't know that we can consider that demonstration as evidence and I just called that
446 to your attention. It is purely a part of the opening statement and if counsel on both sides want to get together and discuss it as to how you can make your record on it, you have been making continual reference to it trying to bring a part of it in evidence. It is not all there. I mean verbally.

Mr. Hume: Suppose we undertake to discuss that.

The Court: Over the evening you mean?

Mr. Hume: Yes, sometime before we dispose of this finally.

The Court: All right.

Q. (By Mr. Hume.) Will you tell us, with respect to the demonstration of the plaintiff's emitter head, which has been received in evidence here as Defendant's Exhibit No. 14, what voltages were used in that demonstration and what was the spacing, please?

A. The voltage used in that particular demonstration was 60,000 volts and the spacing between the article being coated on the conveyor and the front edge of the atomizing disc was 15 inches.

Q. What was the voltage used in connection with
447 the demonstration of the device received in evidence here as Defendant's Exhibit No. 9?

Mr. Meroni: Your Honor, I submit that that is immaterial and irrelevant from the standpoint of it being a demonstration. You see, we are put at a disadvantage.

We have the device here. It is no longer spaced from the work so we can check it to see whether or not the statement is correct, and I submit that that is improper examination to base it on a demonstration which we can't check with the witness on cross-examination.

The Court: You mean you are referring to the demonstration Monday again?

Mr. Meroni: Yes.

Mr. Hume: That is right.

The Court: I have a memory of some occasions, and I don't know whether it applies to this particular one where counsel for the plaintiff inquired of those in charge of the demonstration in some instances of voltage that I overheard and I don't know whether it is of record here. The Reporter was there. Also concerning spacing and
448 what happens to the paint when it was turned off and what happened when the voltage was turned off and different combinations. Whether this particular one you inquired of and saw, I don't know. Do you recall yourself?

Mr. Meroni: I think I was apprised of the voltage but not the spacing. This was the one where the operator manually went over the grid and held it and he moved it around and the distance could have varied all the time he was doing it and we didn't know what the spacing was.

The Court: Well, let's read this question then. You are in effect answering the question.

(The preceding question was read by the Reporter as follows: "What was the voltage used in connection with the demonstration of the device received in evidence here as Defendant's Exhibit No. 9?")

The Court: The question is solely as to voltage and you leaped over into spacing.

Mr. Meroni: I thought it was on spacing, too.

449 Mr. Hume: Only on voltage.

The Court: Then your objection extends itself to spacing, and as I understood it, you conceded here, in the discussion with the Court that you did inquire as to the voltage?

Mr. Meroni: Yes, Your Honor.

The Court: Do you maintain your objection then to this particular question?

Mr. Meroni: I inquired as to the voltage and was told by counsel here what it was but if they had produced this witness at the time of the demonstration and given me an opportunity to examine and check the meters and see what the voltages were, that would be one thing, but I had to take counsel's word for it.

The Court: I will sustain the objection, gentlemen. The demonstration is not in evidence and that is where I was afraid you were going to get some place along the line when you brought it up.

Q. (By Mr. Hume): Would you tell us, Dr. Miller, 450 what the voltage was that was used on the bell type of apparatus as represented in Exhibit 17A here?

Mr. Meroni: May I have it understood that my objection continues to apply, Your Honor, without repeating it each time, if he is going to go into these demonstrations.

The Court: This question doesn't even mention the demonstration as I recall it. Would the Reporter please read it?

(The preceding question was read by the Reporter.)

Mr. Hume: It doesn't mention the demonstration. I will rephrase it.

Mr. Meroni: Except he identified the illustration as being representative of the apparatus that was demonstrated, Your Honor. It is coming in the back door.

Q. What is the voltage that is conventionally used in conjunction with the operation of the defendant's com-

mercial bell type system, and for identification, I refer to the general type represented in Exhibit 17A?

451 A. Generally speaking, the voltage that would be applied to a typical installation of this type would be 90,000 volts.

Q. What is the spacing that is usually employed?

A. The spacing that is usually employed would be 12 to 14 inches.

Q. And what is the voltage that would be employed in the defendant's commercial installation as represented in Exhibit 17B?

A. The voltage in a typical installation of that type would be ninety to one hundred thousand volts.

452 Q. And what is the answer to that same question with respect to 17C?

A. Likewise would be that voltage in case of 17-C.

Q. What would be the spacing in 17-B?

A. 17-B, a normal installation would provide a spacing in the neighborhood of 15 to 18 inches.

Q. Now, at the time the defendant first put into practice the No. 2 system for commercial purposes, what was known generally with respect to the voltages required for electrostatic deposition of paint?

A. At the time the No. 2 process was first put into commercial use, people acquainted and working in the field of electrostatic painting would have been acquainted with the fact that voltages in the order of 90 to 100,000 volts would be necessary for such use.

Mr. Meroni: I move to strike his answer as being hearsay. He can testify to what he knows, your Honor, but not to what other people know.

The Court: Would you read the answer? And you might as well read the question, too.

(The preceding question and answer were read by the Reporter.)

The Court: The answer will go out. You may answer the question now, Mr. Witness, if you can.

453 A. At the time we put the No. 2 process into commercial use, every electrostatic painting installation of which I had knowledge used voltages in the neighborhood of 90 to 100,000 volts.

Q. (By Mr. Hume): Well, when it was put in operation actually what volts were used?

A. 90 to 100 thousand volts were used at that time.

Q. And how did that compare with the practices that existed before in connection with the No. 1 system?

A. The practices in connection with the No. 1 system likewise used 90 to a hundred thousand volts.

Q. What was the fact as to the types and grades of paint to which the No. 2 system was applied when the system was first adapted to commercial usage as compared to what was used in the past for the No. 1 system?

A. The paints that were used with the No. 2 process were essentially identical to the paints that were used with the No. 1 process.

Q. And what is the answer with respect to the rate of paint fed as compared to the No. 1 system?

A. The rate of paint fed generally would be slightly lower with the No. 2 system because of the added efficiencies which were objectionable with that process over pre-
454 viously existing systems but they would be the same order of magnitude.

Q. Would the same rates of feed that had been used in the No. 1 system affect the No. 2 system from the standpoint of operativeness?

A. No, sir.

Q. What was the practice in fixing distances between the work and the electrode as compared to what was known as used, or I should say, what was used in the past on the No. 1 type of system?

A. The distances between the electrode and the article on the conveyor in the No. 1 system were established by virtue of the fact you had to provide sufficient clearance between the electrode and the article on the conveyor, so that first of all you could introduce the coating material into that space without intentionally spraying the electrode system, and secondly, you had to be sufficiently far away so at the voltages applied you get the field sufficiently strong to precipitate your particles and still did not have the possibility of sparking over from the electrode system to the article on the conveyor.

In the case of the No. 2 process the requirement of
455 introducing the material into the space which is referred to as the electrostatic field in this discussion no longer exists because it originates in that field at one terminal thereof, but you still have the requirement of having sufficient spacing so that you get a precipitating—having sufficient spacing so that a voltage can be applied in the form of a single field which will give you these characteristics you desire and the spacing, therefore, must be sufficiently large to allow the dispersion and also must be sufficiently large so you did not spark over from the atomizing head to the article on the conveyor.

Mr. Meroni: I move to strike the whole answer with the exception of the last part having to do with "spacing" as being non-responsive, your Honor; volunteered.

Mr. Hume: Your Honor, the witness was just explaining his answer and making a complete full answer on a technical subject.

The Court: Overruled. Next question.

* * * * *

461 Q. Dr. Miller, since yesterday have you had an opportunity to look at the transcript of the testimony you gave yesterday afternoon?

A. I have read that, sir.

Q. Did you have something in there you stated in there yesterday you would like to correct?

A. Yes, it is on Page 436. There was a statement which I made which should be modified.

Q. Will you please tell us what the question is and what the answer was?

A. The question refers to a reference which I made to a figure and if I could have the record I could point out where that is.

Q. Tell the Court what you want the answer to say.

A. On Page 436, I was asked the question:

"Q. Now, the claim continues: 'Said points being sufficiently close together to permit the coating mate-
462 rial to bridge the spaces therebetween.'

"Do you find and support for that statement in the patented construction of Exhibits 8-A and 8-B respectively?"

I replied—"A. In Exhibit 8-B certainly the points are shown as being close enough together to show the bridging—actually in Figure 7 of that Exhibit 8-B; and likewise in Figure 1 of Exhibit 8 the points are shown as being sufficiently close together to provide such a condition."

I inadvertently referred to Figure 1 in that reply. The reply should have read—"In Exhibit 8-B certainly the points are shown as being close enough together to show the bridging—actually in Figure 7 of that Exhibit 8-B; and likewise in Figure 5 of Exhibit 8, the points are shown as being sufficiently close together to provide such a condition."

Q. Does your correction have any bearing on the next question I asked you?

A. The next question and my answer to that question should be a specific reference to the apparatus shown in Figures 5, 6 and 7.

Q. Now, in going through the claims yesterday, Dr.
463 Miller, and referring to the phrases thereof, and particularly one phrase in Claim 1 of the patent, 536, covering the method which is here marked as Defendant's Exhibit No. 3, I neglected to ask you as to whether or not you found the elements of this particular phrase in the patent in suit.

Now, the phrase is found in Claim 1 beginning in Line 73 where it says "* * * said points being distributed relative to the article surface * * *" I find that I neglected to ask you whether or not that element is found in the Defendant's patented construction as represented in Exhibits 8-A and 8-B respectively?

A. That element is found in those places in Exhibits 8-A and 8-B, since the points of atomization are shown as being distributed lengthwise over the head, 13, with respect to the article on the conveyor.

* * * * *

465 Q. I will hand you the two photographs, Dr. Miller, which have been marked for identification as Defendant's Exhibits 18-A and 18-B respectively and I will ask you if you know what those are?

A. These are photographs which were prepared by me of the clotted disk atomizer as it was being operated.

Q. When were these photographs taken?

A. These photographs were taken this morning, sir.

Q. Where were they taken?

A. They were taken at our laboratory on New York Street.

Q. What emitter was used?

A. The Binks slotted disk emitter which was provided to us, and I believe it was referred to as Exhibit No. 9, I believe in evidence.

Q. The one I hold in my hand?

A. Yes.

Q. This is Exhibit No. 14.

A. I stand corrected, Exhibit No. 14. That is the emitter used for these photographs.

Q. Was it the identical emitter as the one here, Exhibit 14?

A. It was sir.

Q. Now, how was it connected for operation, please?

466 A. It was connected for operation by being positioned essentially as shown in the figure, Exhibit 18-A, pardon me, and positioned above the object being coated which in this particular case was a flat plate that was positioned at a distance roughly 23 inches, I believe, below the disk itself and the disk was connected to a high voltage supply, the other side of which was grounded and the object being coated was likewise grounded. It is essentially the figure which is shown as the center showing in Exhibit No. 12.

Q. Was the disposition of the emitter in respect to the surface being painted in the same relationship as shown on Exhibit 12 when the legends with the Exhibit 12 are in proper position for correct reading?

A. That is correct, sir, and the distance was 15 inches instead of 23 inches from the disk to the work. It was 15 inches in that setup.

Q. Tell us the rest of the conditions for the operation of the emitter.

A. For the operation of the emitter, as I said, the voltage applied to the disk was produced by a suitable high voltage supply and maintained at 60 kilovolts with their respect to the grounded work. The coating material

467 which was a Glidden Japalac material, I believe it was referred to, which was identical to material that was used at an earlier exhibit of this device, at the Binks Manufacturing Company, was pumped to this device at a controlled rate of 37 cubic centimeters per minute and under

the action of the high voltage, the material was broken up into a fine spray and carried across and precipitated on the object 15 inches away.

Mr. Meroni: I move to strike the part of the answer as to what was done at Binks because it is hearsay as far as this witness is concerned. He wasn't present.

The Court: What do you say about that?

Mr. Hume: This witness was not there. I grant that.

The Court: You agree with the motion then?

Mr. Hume: I agree this witness has no personal knowledge of it. We have a stipulation as to what went on there, though, your Honor. We have the answer to the interrogatory as to what went on at that operation.

468 Mr. Meroni: That is right, but this witness has no personal knowledge.

The Court: Your question is directed at his demonstration here and he is going beyond that into another demonstration, and that portion of the answer will be stricken. The motion will be sustained.

Q. Will you continue to explain the characteristics of the operation that you are referring to?

A. Under the operating conditions which I have mentioned, the coating material was actually broken up into fine spray as indicated in the photograph which is here contained as Exhibit 18-A.

Q. Well, now, how many fields were employed in this setup you have just described?

A. There was a single field existing between the disk atomizer and the object being coated, and under the action of that field the material was broken up into a spray of fine particles and they were dispersed and carried across and precipitated on the oppositely disposed articles.

Q. Was any compressed air employed?

A. No compressed air employed.

Q. Now, will you tell us how the photographic
469 equipment was arranged, please?

A. The photographic equipment was arranged in such a way that the camera looked directly at the surface shown in Exhibit 18-A, the camera lens being positioned 23 inches away from that particular device and looking directly at its flat surface as indicated here. A light source was positioned at one side and arranged to eliminate the disk in this particular picture. The light source was flashed and the photograph, as herein shown on Exhibit 18-A, was taken on the film. That film was later developed and since the film actually was a reduced image of the head, that film was then taken and enlarged so as to represent the full four and one-quarter inch diameter of the device as it actually was, and this is the result of that enlarged photograph.

470 Q. Do I understand that the showing on Exhibit 18-A, therefore, is a one-to-one representation showing the same size of head as the actual head?

A. That is correct, sir.

Q. Who set up and conducted the painting operation?

A. I actually had that set up and conducted in my presence and I took the photograph and turned on the switch, and so forth.

Q. Who did the developing of the negative?

A. I did, sir.

Q. Who did the printing?

A. I did, sir.

Q. Now, will you turn to Exhibit 18-B and tell us what that is?

A. 18-B is an enlarged image of another photograph which was taken of the same device, and in order to obtain an enlargement of this type, it shows the details of this picture as necessary to actually conduct a double exposure arrangement, one exposure being intended to show the

blade or the outside surface of the atomizing disk, and the other exposure being primarily to show in shadow the streamers which are formed at the edge of the disk; so, for this purpose the disk was set up and put in operation
471 as described; the camera was positioned as identically before described at a distance of 23 inches away from the atomizing device. On the other side of the atomizing device where the camera was positioned, a strobe light which is essentially a very intense, very short duration light, aimed at illuminating the filament and entering into the camera on the other side of the filament.

Q. When you say "filament" you mean what?

A. I am sorry, I mean the streamers, these parts that come down, the liquid extensions on the edge of the head. The arrangement was such that I took the light of the previous experiment, positioned it on the same side of the disk as the camera, flashed that light while the shutter of the camera was open, so as to record the atomizing disk itself as seen at the top of the exhibit 18-B, and then, without further modification of the equipment, the field was on and everything under those circumstances, the liquid was fed to the atomizing disk and the light at the back of the disk was flashed so as to superimpose upon the original image in the camera the streamers which are shown in this picture. I actually took both of those pictures, manipulated the camera during the picture, developed
472 the film, and from this film which is actually 25 to 1, was actually taken.

Q. Now, as I understand it, you took two exposures, is that correct?

A. That's correct, sir.

Q. Which one was taken first?

A. The exposure on the, showing the disk itself, was taken first.

Q. Is that it on the camera side?

A. That is it on the camera side.

Q. Was the camera moved at all in relation to the head during the taking of the first—between taking the first and the second pictures?

A. It was not, sir.

Q. Will you make it a little more clear just why this first exposure was taken?

A. It is to show the location of the edge of the device in the photograph. If this is not done, that edge does not stand out clearly so you can distinguish specifically where the edge is located.

Q. Now, at the instant of this first picture being taken, is the device working or not working? Are there any streamers there or not?

A. There are not at this point. The field is on and 473 everything else is in function but there are no streamers.

Q. Now then, the second picture follows, and what is done again with that second picture?

A. It is actually the same picture. It is the same piece of film, the camera has not been moved, no modification, the film has been left in the camera. The only thing that has been done is that the pump has been turned on and the coating material is delivered to this device and when the device is in operation and has the showing of 18-B in an over-all view, the back, the light at the back of the disk, that is on the other side of the disk from the camera, is flashed for roughly a third of a microsecond so that the motion and everything is stopped and you see the situation.

Q. When was this second picture taken?

A. The second picture was taken this morning by myself.

Q. And where?

A. At the New York laboratory.

Q. And with respect to what piece of equipment?

A. With respect to the Binks slotted disk atomizer.

Q. Is that the same or different equipment from the equipment you describe in the equipment for the first photograph in Exhibit 18-A?

474 A. It was an identical piece of equipment. As a matter of fact, the piece of equipment referred to was not moved between the taking of these two photographs.

Q. Just to make the record absolutely clear, tell us what was the condition of the head from the standpoint of whether it was, the streamers were present when the first exposure was taken.

A. The first exposure which was taken there is with no streamers present.

Q. Why?

A. Because there was no coating material being delivered to the atomizing head under those circumstances.

Q. Was the light on the opposite side of the head from the camera on when the first exposure was taken?

A. It was not on, sir.

Q. What light was on?

A. The light that was on was the light on the same side as the camera and as I said, was there primarily for illuminating the atomizing device and bringing out the scratches and marks which are shown in this photograph.

Q. When the second exposure was taken what lights were on?

A. Only the light at the back, the strobe light.

Q. And the light on the near side was out?

475 A. That is correct. That is necessary because we use what is called a "dark field technique" in which the camera is left open and the light is flashed.

Q. What is the fact as to whether or not streamers were present when the second exposure was taken?

A. There were streamers present when the second exposure was taken.

Q. That is on account of what?

A. Because of the fact that we had started the pump and thereby delivered material at a controlled rate to this device.

Q. Now, is this photographic technique that you have referred to one that you have used ever before?

A. I have, sir.

Q. Is it—do you know whether or not it is a common practice with the defendant to use this kind of technique in making this kind of picture?

A. It is. It is a technique which has been developed by our organization for this particular purpose. I might say it wasn't specifically developed because the technique basically is old, but the specific application of the technique is used by our firm to study and to bring out the characteristic of such discharge phenomena.

476 Mr. Hume: Your Honor, I offer in evidence Defendant's Exhibits 18-A and 18-B.

(Defendant's Exhibits 18-A and 18-B offered in evidence by Mr. Hume.)

Mr. Meroni: Your Honor, may I ask the witness a few questions?

The Court: Yes, sir.

Mr. Meroni: Mr. Miller, what fraction of time is represented in the picture, Exhibit 18-A; in other words, how rapidly did you have to take that picture?

The Witness: Exhibit 18-A was taken at a 50th of a second with a F stop of 16 on the camera.

Mr. Meroni: How did you avoid showing in Exhibit 18-B the fact that the points are constantly changing on this when this type of an emitter is operating?

The Witness: This picture, 18-B, so far as the streamers were concerned, was taken in one third of a micro-second, a micro-second being a millionth of a second, so you have essentially a stopping of the motion during that

time, so you actually see in this picture the particles which are being formed off the end of the streamers as stop dots.

Mr. Meroni: If you had taken it for any longer
477 period of time, then the points would shift, wouldn't they?

The Witness: The points would not shift, no, sir.

Mr. Meroni: The streamers would shift?

The Witness: The streamers would shift only to the extent that is shown in the other Exhibit 18-A.

Mr. Meroni: What I am trying to find out is the streamers don't always remain in the same position, they don't always emanate on the same points of periphery of this disk, do they?

The Witness: That I can't guarantee. That is correct, sir.

Mr. Meroni: One more question: Did you make this test by feeding this paint through a needle valve or through a pump?

The Witness: We did not have a needle valve; we used a pump.

Mr. Meroni: What pressures did you use

The Witness: The pressures were just sufficient to
478 deliver the coating material to the atomizing head and cause it to ooze out of the slotted part of the disk.

Mr. Meroni: Were you aware of the fact in the answers to the interrogatories that it had been recited the Binks device had been operated at a 100,000 volts?

The Witness: I am not certain of that fact, sir. I read the interrogatories.

Mr. Meroni: Why did you operate it at 60,000 instead of 100,000?

The Witness: That is the most ideal conditions we have found for producing atomization with this device and this coating material.

Mr. Meroni: That is your own experimental work with this type of device here?

The Witness: With this device that was supplied to us as part of this work we investigated and found that was the most ideal conditions of operation for it.

Mr. Meroni: You are talking about Exhibit 14?

The Witness: I am, sir.

479 Mr. Meroni: You had never seen another device like that?

The Witness: No. This is the only one I have seen.

Mr. Meroni: In your experimental or testing work with the, with it, you only used this one device?

The Witness: On that particular device experimental work and testing work we carried out, we used only that device.

• • • • •

481 *Cross-Examination by Mr. Meroni.*

• • • • •

486 Q. Well, just so that the record is clear, would you say that it is correct to state that as of the summer of 1943 the No. 1 System and the detearing system of the Ransburg Company were already in commercial use?

A. If you mean by "commercial use" that we had licensees or that the company had licensees at that time I will have to answer no.

Q. Well, were they available to the market at that time?

A. They were, sir

Q. Had you demonstrated such systems to customers at that time?

A. When I came with the company in 1943 we were in a position to demonstrate such equipment to customers.

487 Q. Now, tell the Court what an electrostatic detearing system is, with particular regard to the summer

of 1943. In other words, the type of system that was already in existence at that time at the Ransburg Company.

A. I perhaps could best describe that type of system as illustrating the major use to which it was being put at that time. Since this was during the war years, the United States government had a problem of coating steel shell cases, that is, the powder container to which the projectile is attached and which is then used to propel a shell or the projectile. Brass had become a very restricted item, obviously, because of the shortage of copper; and the government found it necessary to make these shell cases out of steel, and the problem of coating them automatically arose. They were difficult to spray because of the internal cavity. Ordinary dipping procedures allowed a bead or a heavy edge to form around the bottom or the open mouth of that shell, which resulted in the shell casing sticking in the breech of the gun when the shell was breached and fired, and then during the process of rejecting the 488 shell case, of course, it would stick in and the gun would become inoperative. So this represented a major difficulty with the use of steel as shell cases since obviously they had to be coated, otherwise they would corrode and deteriorate in the field. Dipping seemed to be the ideal way of applying the material to the surface of the shell. The heavy edge around the bottom or the open mouth of the shell represented a major detriment to using that method.

The electrostatic forces between articles seemed to present the possibility of removing that heavy edge. And so we supplied that method in the form of our detearing process where the dipped shell, having previously been immersed in the liquid or a coating material, was then removed from that liquid, allowed to drain under the action of gravity until all of the surplus except the bottom heavy edge had left the shell. The shell was then carried by a conveyor over a charged grid system and the attraction between

the grid and the shell caused this material to blob off, and as it passed over the grid it would clean up that heavy edge and the shell could then be carried into a curing oven
489 and baked so that you had then a projectile or a finished item without a heavy edge.

Q. What happened there was that as the shell with this coating on it entered the field, the electrostatic field would atomize the surplus paint, wouldn't it?

A. It would remove the surplus paint, sir.

Q. It would atomize the surplus paint, would it not?

A. As the shell approached the grid the surplus paint came under the influence of the grid, and in many cases, and in most cases, it would blob off in rather large particles, and as the process continued to pass over the grid that material would be removed in various sizes depending upon what was available there on the grid.

Q. Getting back to my question, it would atomize the surplus paint, would it not?

A. What is your definition of atomization, sir?

Q. The same sense that you are using it here in coating.

A. In a sense of coating I would not say that that material was completely atomized.

Q. Well, would you say that the surplus material was broken down into small particles as it was removed by
490 the electrostatic field and dispersed?

A. I have to again qualify my answer in the sense that you have used the word "small." These particles were not of a diameter which would readily lend themselves to a coating application.

Q. Well, how small were they?

A. These particles might be the size of an eighth of an inch; some of them might have even been the size of three-sixteenths of an inch in diameter.

Q. By the way, while we are talking about that, does the Starkey Patent, either of the Starkey Patents, any place tell you what size the particles have to be?

A. No, but the Starkey Patents—

Q. (interposing) I just asked you if they did.

A. No. Pardon me, sir.

• • • • •

492 Mr. Meroni: All right, sir.

I have a patent here which I would like to have the Court Reporter mark for purposes of identification. It is Ransburg et al. Patent No. 2417798, and I would like that identified as Plaintiff's Exhibit four A.

(The Plaintiff, for purposes of identification, handed the Reporter a certain document for marking, and which was by said Reporter marked Plaintiff's Exhibit AAAA.)

Q. I hand you what purports to be a copy of Ransburg Patent 2417798, bearing an application filing date of June 25, 1943, and ask you if you are familiar with the detearing subject there shown.

The Court: Is that patent included in your brief?

Mr. Meroni: No, your Honor, but this is included in the patents owned by Ransburg as to which we have a stipulation.

Here is an extra copy for the Court.

(A document was handed to the Clerk of the Court.)

493 Mr. Meroni: Have you answered the question, Mr. Miller?

The Witness: I have not.

A. I am generally familiar with that patent, yes.

494 Q. You recognize the patent as disclosing a detearing apparatus?

A. Yes, sir.

Q. Now, is it true that the earliest activities in connection with the Starkey, et al. patent, the subject matter here in issue, occurred in October of 1943? Is that your recollection?

A. That is essentially right, sir, yes.

Q. Just to refresh your recollection, you recall during

the depositions identifying the first entry having to do with this development, Binks Exhibit B-1, the entry being dated 10-29-43—"Al Starkey suggested using the detearing action from the bottom of the brush as the atomizing agent to spray items passing under this arrangement—see figure" and there is an illustration there below. Does that refresh your recollection of the date?

A. Yes, sir.

Mr. Hume: Does that have an exhibit number?

Mr. Meroni: B-1.

Q. Now, did you say that detearing does not involve coating?

A. In the detearing process, articles are coated, yes.

Q. Well, isn't the detearing process essentially a 495 coating process wherein you remove the surplus paint and deposit it someplace?

A. It is one step of such coating operation.

Q. One step?

A. Yes.

Mr. Meroni: I would like the Court to see this Exhibit B-1, which we will, in due course, offer in evidence with the deposition.

Q. Now, as a matter of fact, didn't you have quite a bit to do with the original disclosure of the Starkey, et al. subject?

A. I actually received the information from Al Starkey and prepared a write-up, describing that disclosure which was sent to our patent attorneys.

Q. And you described it in several instances as a detearing operation, did you not?

A. I did, sir.

Q. I would like to refresh your recollection in that regard. Here is Exhibit XX dated, I believe, December 10, 1943. Is that a memorandum prepared by you on or about that date concerning this Starkey, et al. invention?

A. This is.

496 Q. And does that refresh your recollection that you referred to this in terms of "deteared" and "detearing edge"?

A. May I see the disclosure again, please?

Q. Yes.

A. Yes, I referred to it in this article as "deteared" and "detearing edge."

Q. Wasn't this article specifically prepared for transmission to the patent lawyers in preparing the application?

A. It was, sir.

Q. Did you transmit it to them?

A. I cannot answer that specifically, sir.

Q. Did you have any discussion with the patent attorneys in connection with the preparation of the Starkey, et al. patent?

A. I did, sir.

Q. Wasn't it part of your duties at that time to assist in the preparation of the patent applications on behalf of the company?

A. Prepare such technical information as was needed, yes, sir.

Q. You acted as a liaison between the company and
497 the patent counsel?

A. From the technical standpoint, yes, sir.

Q. Now, do you have a recollection of submitting to the patent attorneys the data and drawings for Figures 5 and 6 of the Starkey, et al. patent?

A. Such drawings were prepared, sir.

Q. Didn't you prepare them?

A. Some of them I did; some of them I directed their preparation.

Q. And doesn't this memorandum concern those figures? Do you want to look at it?

A. If I could, please.

The document in question was handed to the witness.

A. (Continuing.) This memorandum refers to certain drawings, engineering drawings, which were prepared for submission to the patent lawyer and from those rough drawings or those engineering drawings, this patent drawing was prepared, sir.

Q. And is this drawing, 4307, one of those that was prepared, this having been identified as Binks Exhibit J?

A. Drawing No. 4307 is one of those which was so prepared, sir.

498 Q. Did you prepare the specific drawings identified there as Figures 5 and 6 up in the right-hand corner?

A. Yes, I did, sir.

Q. And those are the figures that were used by the patent draftsmen or patent attorney in preparing 5 and 6 of the application, were they not?

A. They were.

Q. Now, you likewise supervised the preparation of this Exhibit 9 you produced here as being representative Figures 5 and 6, is that right, sir?

A. I did, sir.

Q. And you offered that to the Court as being a fair version of Figures 5 and 6, is that correct?

A. That is correct, sir.

Q. Well, now, I would like to read to you the description that you gave to the patent lawyer to prepare Figures 5 and 6, and see if that refreshes your recollection. "In drawing 4307, one modification of the electrostatic atomizer is revealed." Figure 1, which has been numbered by the attorney or the draftsman as Figure 5, you recall that, do you not, sir?

A. Could I have that copy while you are reading it?

Q. Yes.

499 "Figure 1 shows a cross section view of the arrangement. A supply trough, 2, carrying the paint supply,

has an elongated funnel shape. As indicated at the mouth, 3, of this funnel, there is rigidly fastened a member, 1, composed of fine wires wound about a fixed shaped mandril. The sides of the funnel are the only points in contact with the five wires so that when viewed below this arrangement presents the appearance of Section AA. The series of openings thus formed between the wires offer a group of passages through which the coating material can flow down to the lower edge. In this manner, one has a uniformly distributed source of material."

Did you prepare that information in those drawings for the draftsmen or the patent attorney to use in the preparation of Figures 5 and 6?

A. That is correct, sir. I was referring to the drawing Figures 5 and 6 as shown here when that was prepared.

The Court: That is 5 and 6 on your drawing, 4307?

The Witness: That is correct, sir.

Q. How does it happen then that Figures 5 and 6 show pins instead of wires, do you know?

500 A. That was a later development or thought concerning this particular device.

Q. Who gave that development to the patent attorneys?

A. I imagine Ed Ransburg did, although I am not certain.

Q. You don't know?

A. I do not know.

Q. It couldn't have been a mistake of the patent attorney, could it?

A. I cannot answer that question, sir.

Q. Well, as a matter of fact, isn't it true that the patent attorney showed hollow pins in Figure 6?

A. I cannot answer that specific question, sir, without reference to the showing in the patent.

Q. Well, don't you have the showing there in that Exhibit 8-A?

A. That is a drawing of what appears in the patent. The description of it probably clarifies the point you are referring to.

Q. I am asking you about the drawing. Doesn't that convey to you the impression, as a man familiar with drawings, of hollow needles?

A. They might be points of needles as far as I can tell from that drawing. That is a sectional drawing.

501 Q. I call your attention to the drawing as it appears in the patent application, which is Exhibit 5-A here, and ask you if that doesn't convey to you, taking into consideration that it is a section under Line 66 looking downwardly the appearance of those pins being hollow needles?

A. I have no way of telling that, sir. There is no information revealed in this drawing that those are solid or hollow.

Q. Well, you took it for granted they were solid when you made this model, did you not?

A. We went on the basis of the specification, sir.

Q. The specification doesn't say they were solid, does it? Do you want to look at the patent in that respect?

A. I would like to look at that description, sir.

Q. All right, here is Exhibit No. 3.

The exhibit in question was handed to the witness.

A. The patent specification recites that Figures 5 and 6 show a further modification of the applicator head indicated at 213. In this head, the orifices through which the coating material flows are provided by a plate, 214,
502 clamped between opposed rows or needles, 215. The needles are cylindrical so that the material will be caused to flow between them, the plate, 214, and the clamping walls, 216, so as to come out in the form of an inert droplet, 217, of coating material." I believe the specification clearly defines this or these as being needles.

Q. Doesn't say that they are solid needles, does it?

A. No, but the fact that the coating material flows down around the outside rather than that which would be indicated if they were hollow, certainly convinces me they were solid needles.

Q. We have some enlargements made of Figures 5 and 6 from the Patent Office photostat, and I hand you a copy.

Mr. Meroni: First I will have it marked for identification as BBBB.

(The plaintiff, for purposes of identification, handed the Reporter a certain document for marking, and which was by said Reporter marked Plaintiff's Exhibit BBBB.)

Q. According to that enlargement, 214 is a divider strip, is it not?

A. That is correct, sir.

Q. And on opposite sides of that strip, 214, apparently are some needles, is that correct, sir?

503 A. That is correct, sir.

Q. The needles appear staggered, do they not?

A. On opposite sides of the central plate, that is correct.

504 Q. If they were wires, they would also have appeared staggered, would they not?

A. I can't tell from this drawing, sir.

Q. Well, if that dividing strip, 214, had been wound by wire as described in your original description, then you would see strips or portions on opposite sides of the strip, 214, staggered with respect to each other, would you not?

A. That is correct.

Q. Now, assuming that Fig. 6 is taken on the line, 6-6, or Fig. 5, looking downwardly, the white areas would designate the absence of material, would they not, on the top of the pins, 215?

A. The white area designated as 216 is shown as white, and I am sure that is solid material.

Q. You say the white area designated as 216 is designated as solid material?

A. That is correct. That is the—

Q. (Interposing.) What about the little white circles in the middle of the pins, the pins being otherwise dark except for the white round holes in the middle?

A. I have no way of telling, sir.

Q. You couldn't say whether or not that is a hole or not?

505 A. I cannot, sir.

Q. Now, look at the lower end of the pins, 215. Do you notice how the globules of inert particles are collected at 217?

A. Yes, sir.

Q. The material is only at the extreme lower end of the needle, is it not?

A. I believe it shows that it is being fed down the side of the needle on the right-hand side.

Q. Wouldn't that material be solid up between the fingers, if it was coming down?

A. It would be liquid, sir.

Q. It is not shown that way, is it?

A. It is pretty hard to designate liquid in a drawing of this type, sir.

Q. 217 is liquid, isn't it?

A. 217 is liquid.

Q. If the liquid was continued up between the fingers, that darkening would have appeared between the needles, too, would it not?

A. Those needles are in two different rows, sir.

Q. There is no particles of liquid matter connected to the globules, 217, extending up into the area where the

506 partition strip, 214, is, is that right?

A. I would have to point out that the globule of the liquid at the bottom of the pin, shown in solid black, gradu-

ally tapers off as it goes up toward the top of the head, the black line being heavier as it goes along the side, as it is in the same line represented above the dividing strip, for example, which to me would indicate there is an effort on the draftsman's part to show the coating material flows down the side of the pin to the lower edge.

Q. Now, when the patent talks about projections, or points, the patent is referring to points like 217, is that correct?

A. Not necessarily, sir.

Q. What other points could—What other points could the patent be talking about?

A. The points formed at the—on the droplets or inert droplets of liquid.

Q. You mean to tell this Court that you are representing to the Court that when this patentee talked about globules or particles of liquid matter on points, he wasn't talking about the material being on mechanical points but was talking about it being on liquid material?

567 A. Both modifications are included in this disclosure, sir, to the best of—

Q. (Interposing.) Will you point out in the patent any place a description which says that they are liquid points?

A. Describes them as being points of atomization, as I remember, sir.

Q. Points of atomization on these projections like 217, isn't that right?

A. I would have to refer to the patent for—

Q. (Interposing.) You have a copy, I believe, before you.

A. (Continuing.) —various positions that are referred to.

Q. You referred to claims here. Let's take Claim 2 for example, of the apparatus patent, which is a division of this. I hand you a copy of that patent, which has been

marked as Exhibit 4, and call your attention to Claim 2, of, for example, of Exhibit 4.

Now, he talks about the wire wrapping having a series of spaced turns, portions of which constitute projections. Now, you understand that when he is talking about "wire wrappings" he is referring, for example, to showing like in Fig. 7.

A. That is correct.

Q. And when he is talking about projections, he is
508 talking about the lower ends of each turn of wire. Do you understand that?

A. The claim describes the means as a wire wrapping having a series of spaced turns, portions of which constitute projections and the spaces between which constitutes restricted orifices.

Q. Then, he says, "Electrostatically atomized finely divided particles from coating material on the surface of said projection," isn't that correct?

A. That is correct. "The said projections refers back to the statement."

Q. So that in this particular instance where you have the wire wrapping, the particles of matter are—that are atomized, are on the projection formed by the lower extremities of the wire wrapping, is that correct?

A. On portions of such wire wrappings.

Q. With that modification it is correct?

A. I do not know specifically where those portions are located from this disclosure.

Q. You have not studied this patent in detail?

A. I have. I am interpreting the patent, the wording that is being handed to me, however.

Q. In this same apparatus patent, Exhibit 4, col-
509 umn three, we find this statement, line 41, "As illustrated in the drawings, the needles are sufficiently close

together as to cause the coating material to bridge the spaces therebetween." Do you find that statement?

A. I do, sir.

Q. Do you find any corresponding statement in the original patent, Exhibit 3?

A. Such statement is not there, sir.

Q. Are you aware of the fact that that statement was introduced in the application of the apparatus patent, Exhibit 4, after the defendant, Ransburg, learned of the plaintiff Binks' emitter, SK 661? Are you aware of that fact?

A. Could I have that question repeated again?

The Court: Read the question.

(The preceding question was read by the Reporter.)

A. I am not aware of the fact as to specifically when this was introduced into the patent application.

Q. Well now, in constructing this exhibit that you have there—

The Court: (Interposing.) Exhibit 9.

Q. (Mr. Meroni continuing.) —9, did you con-
510 struct that in the light of the teaching of the patent, method patent, Exhibit 3, or in the light of the teaching of the apparatus patent, Exhibit 4, which was supplemented to include this statement about the coating material abridging the spaces?

A. Since this is a piece of apparatus, I went to the apparatus patent for disclosure.

Q. So you constructed this in the light of the entire description of Figs. 5 and 6, appearing in column three, of the apparatus patent, Exhibit 4, is that correct?

A. That is correct, sir.

Q. Now, is there any divider strip in there like No. 214?

A. There is a strip of metal between the two rows of pins, sir.

Q. Is that a separate strip of metal that was put in there with the fingers alongside of it?

A. As I testified earlier, this device was built in a manner which was most convenient to construct from a mechanical standpoint and the pins, or extensions and needles, as they are referred to, were actually screwed or tapped into the base of the triangular trough openings being provided, as indicated in the disclosure.

Q. In other words, you drilled some holes in the
511 bottom of the trough and stuck some pins in it? Is that what you did?

A. We screwed those pins in so they would be attached.

Q. You did not attempt to make it as shown in the patent by taking a separate strip of material, 214, mounted needles, 215, on opposite sides, and then crimping the sides, 215, to the trough thereto?

A. We produced as nearly as we could and in as easy a manner as possible in Fig. 5 and 6.

Mr. Meroni: Read the question and see if you can give me an answer to the question, please, sir.

(The preceding question was read by the Reporter.)

A. We did not.

Q. So you don't know whether it can be made that way or not?

A. I personally do not know specifically that it can be made this way.

Q. Then you admit this device that you have produced as Exhibit 9 is not an exact reproduction of Figs. 5 and 6?

A. That is not an exact reproduction of Figs. 5 and 6.

Q. Did you supervise the construction of this model?

A. I did, sir.

Q. Who was the man that made it?

512 A. I would have to get his name. (Referring to notes.) Mr. Downing and Mr. Moos, Al Moos and Dick Downing.

Q. Did you go out in the shop and tell them how to make it?

A. I did not.

Q. Who did?

A. I gave instructions to Jim Juvinall to have such device made and he in turn followed through from that standpoint.

Q. He is an engineer of the company?

A. He is an engineer of the company.

Q. He does not report to you?

A. In connection with this device he did.

Q. He does not ordinarily, does he?

A. Ordinarily, he does not.

Q. You say that was the extent of your supervision? Namely, you told this other engineer to go out in the shop and have it made?

A. When the device was completed, I was asked if this was what I wanted.

Q. So, after you told Mr. Juvinall you did nothing more about it until he handed you this device and said, "This is it"?

A. We discussed the possibilities of making the device.

513 Mr. Meroni: Your Honor, I don't think this is a fair reproduction of this patent and I objected to it before and I am going to renew my objection.

The Court: The objection is overruled.

Q. (By Mr. Meroni.) As far as you know, has the company at any time—and by "the company" I mean Ransburg—built any other device like this Exhibit 9?

A. No, sir.

Q. Are you aware of the fact that it has been admitted in answers to interrogatories or admissions, that none of the specific devices shown in the Starkey, et al. Patents here in suit have been actually commercialized?

A. Yes, sir.

Q. It is a fact, then, that you have never commercial-

ized a stationary atomizing applicator of the type shown in these patents?

A. That is not true, sir.

Q. You have commercialized and sold one like that shown in these patents?

A. No, sir, we have not commercialized a device like that shown in these patents.

* * * * * *

515 Q. Before the recess, Dr. Miller, we had two samples marked as exhibits here for identification; and I am handing you one of them marked CCCC and ask you from an external appearance would you consider this to be representative of the applicator head or atomizing head 13 in Figure 1?

A. It has the general external appearance of the applicator head of Figure 1.

The Court: In Exhibit 8A.

The Witness: In Exhibit 8A.

Mr. Meroni: Yes, Your Honor.

Q. I might state, so that you are not misled, that we were concerned with the external appearance and we have not put in there the partitions designated by the dotted lines in Figure 1 of 8A. With that exception, however, I believe that is a fair reproduction of it. Do you con-

516 sider it as such?

A. From an external appearance it would appear to be such, yes.

Q. Are the holes located in the proper manner in the vortex of the device, would you say?

A. They appear to be located in that way, sir.

Q. There is nothing in the patent that teaches how close the holes should be to each other, is there?

A. "So as to form essentially at the object a continuous dispersed coating" is the statement, I believe, in the disclosure.

Q. There is nothing in terms of inches or measurement with regard to the closeness of the holes, is there?

A. There is not, sir.

Q. Now, according to Figure 1 the liquid material comes out of the holes in streamers, as shown in Figure 1 of Exhibit 8A, is that correct?

A. The material is brought to these orifices in forms of inert droplets, as I understand the patents, sir.

Q. On each of the orifices?

A. That is correct.

Q. There is nothing in the patent that says how many orifices you need, is there?

517 A. No, there is not.

Q. And I believe in connection with the other forms there is nothing in the Starkey Patent that says how many pins or turns of wire you can use, is there?

A. No, sir.

Q. As far as the disclosure in the patent is concerned, if you had the device so formed that you got one droplet would that droplet atomize and be dispersed?

A. Yes, it would, sir.

Q. I hand you what purports to be a sample of another form marked Exhibit DDDD and ask you to compare it in a similar manner as you did the last one, but in this case with the showing in Figure 7, and state the results of your observation, referring to Exhibit 8B.

A. With the exception of the shape of the end plates, this appears to be generally the same exterior appearance as the device shown in Figure 7 of Exhibit 8B.

Q. There again you have no teaching in the patent as to how long it should be, have you?

A. Only insofar as the figure indicates that it would be comparable with the object you are coating.

Q. Well, if you were coating a penny would it be

518 the size of a penny?

A. It could be.

Q. Mr. Miller, I have here Defendant's Exhibit 6 which purports to be the file history on the Starkey Apparatus Patent, No. 2794417. I call your attention in this file history to Amendment C filed August 23, 1956, wherein Page 6 of the patent specification was amended to recite: "As illustrated in the drawings, the needles are sufficiently close together as to cause the coating material to bridge the spaces therebetween."

Now, I would like to ask you if you know of any place in the Starkey Patents or applications in suit where the needles were previously described as being sufficiently close as to cause the coating material to bridge the spaces there between? In other words, is this the first time that that description was ever incorporated in the Starkey et al. Patent disclosures?

A. I would presume that it is since in answering that question I haven't read this file in its completeness from the standpoint of answering your question, so I don't know whether it was ever entered before or not.

Q. Well, are you aware of the fact that there is an
519 admission to an admission or interrogatory stating that that is the first time that that specific language was used?

A. I know that such an interrogatory was presented.

Q. Now, I hand you copies of both of the patents in suit, Exhibits 3 and 4.

A. I have those, sir.

Q. And ask you if from your knowledge of those patents you know of any place at all in either of those patents where that language is used, except in the one point on Page 3, Lines 41 to 44, of Starkey Patent 2794417 which I have previously called your attention to. Do you know of any other place in either of these patents where that language is used?

A. There are no other places in these two patents where that language is used.

Q. Did you ever see detearing apparatus similar to that shown in this Ransburg Patent 2417798 previously identified as Exhibit AAAA in use?

A. Which particular figure, sir?

Q. Well, let's refer to all of them.

A. I don't believe I did see a single unit in which
520 all of these showings were incorporated.

Q. Well, did you see some of the units in use?

A. Yes, sir.

Q. You did?

A. Yes, sir.

Q. But you didn't see one installation embodying them all? Is that what your answer is?

A. That is correct.

Q. Now, I believe you said this patent is directed to an electrostatic detearing apparatus.

Mr. Hume: I object to what the patent is directed to. It calls for a legal conclusion. If he confines his questions to factual content of the patent that is a different matter.

Mr. Meroni: You have asked him about legal conclusions and opinions concerning the Starkey Patents in suit, and I believe you qualified him.

The Court: Let's have the question read.

(The Reporter read the following question: "Now, I believe you said this patent is directed to an electrostatic detearing apparatus.")

521 The Court: He can answer that. The question is before have you said this? It calls upon whether you have said it before here in testimony. "Yes" or "No."

Do you understand the question?

The Witness: Yes; I do; and I believe that I said that it did refer to such.

The Court: The objection will be overruled.

Q. Now, we had some difference of viewpoint here a while ago as to whether in detearing you can properly refer to it as a coating medium. Do you recall that discussion a while ago before the recess?

A. Yes, sir.

Q. Does this patent refresh your recollection in that regard, in that the first several paragraphs specifically say that the invention relates to apparatus for coating articles?

A. The detearing process relates to apparatus for coating articles.

Q. Yes, sir.

A. That was my answer, sir, that it does.

The Court: Well, the more correct terminology is
522 "decoating an article?"

The Witness: That is correct, sir.

Mr. Meroni: I would like to have this marked for identification as Plaintiff's Exhibit EEEE.

(The Plaintiff, for purposes of identification, handed the Reporter certain documents for marking, and which were by said Reporter marked Plaintiff's Exhibit EEEE.)

Q. I hand you what purports to be a catalog of the Ransburg Company and ask you if you have seen it or one like it before in the course of your work for this company?

A. I have, sir.

523 Q. Did you ever have anything to do with the preparation of any of the catalogs?

A. In a general way, sir.

Q. Now, on Pages 8 and 9, which are in the center of this catalog, I see some descriptive matter entitled "How Electrostatic Spray Works." Does that description correctly describe the No. 1 Electrostatic System as it was used prior to October 1943?

A. I believe that this does, sir.

Q. I don't want to mislead you. I don't believe this catalog was published in 1943. That is an article in the front here that is a reproduction of an Indianapolis News item reprinted January 27, 1947, so presumably this catalog was published some time after 1947, is that correct?

A. That is correct, sir. That is why I had to read the article to be certain that the disclosure was consistent with our practice before 1943.

Q. Have you any recollection as to when this was published by your company?

A. Shortly after that article which was supposed to have occurred in 1947, I believe.

Q. I notice on this page that you read here, which was Page 9, in the lower right-hand corner, reference is 524 made under Equipment to "When supply is necessary, specially designed electrostatic units * * *" etc. Were you supplying such equipment in 1943?

A. Yes, we were, sir.

Q. And you were supplying it continuously from 1943 through 1947, would you say?

A. That is correct, sir.

Q. And you still supply some, don't you?

A. Yes, sir.

The Court: You are in error on the page number. It is Page 8, isn't it? You said 9.

Mr. Meroni: The left-hand side, I would take it is 8 and the right-hand side is 9, I believe, Your Honor.

The Court: In your original question you asked him to read Page 8.

Mr. Meroni: I thought I asked him to read both pages.

Q. Did you read both pages 8 and 9?

A. Yes.

Q. Your answer was based on Pages 8 and 9, sir?

A. That is correct, sir.

Q. Now, this description of the No. 1 System that
525 is referred to on these two pages of Exhibit EEEE is applicable, is it, to the type of system shown on Exhibit 7?

A. It is, sir.

Q. That is the airless type that you described to the Court earlier in this proceedings, is it not?

A. No, sir.

Q. Or the air type, I mean.

A. Yes, sir.

Q. Now, by "air type" we mean where you use an air gun plus an electrostatic field? Is that a simple way of stating it?

A. That is correct, sir.

Q. By the way, while we are talking about this No. 1 type, if some of the paint strikes these bars (indicating) and accumulates on the bars, will that paint atomize off of these bars and become dispersed?

A. It depends upon the amount of material.

Q. Well, let's assume you get a substantial amount on one of these energized electrostatic bars, would it atomize off the bar and become dispersed?

A. In all probability it would run down the bar and would glob off the bottom of the bar.

Q. You wouldn't say it wouldn't atomize, would you?

526 A. That depends upon the word "atomize."

Q. Have you ever seen any instance where it did atomize off the bars?

A. I have seen instances where the particles which came off the bar, at least to a certain extent, could be considered to be in the size that might be usable for coating.

Q. From the standpoint of the physics principle of electrostatics there is no reason why you couldn't atomize material off the bars, if they had the right voltage, is there?

A. Conditions being correct, that would be true, sir.

Q. And once you atomize liquid particles, it follows they have to be dispersed, isn't that correct?

A. Yes, sir.

Q. You can't have atomization without dispersion?

A. That would depend upon the spacing, I would say, sir.

Q. But ordinarily it would be correct to say if you atomized the liquid particles, they would be dispersed?

A. I will have to qualify my answer to the extent that if the spacing were sufficiently large, such particles would disperse.

Q. Now, the particles have to go some place once 527 they are atomized, do they not?

A. Yes, they do, sir.

Q. And if they happen to lodge on an article then you say it is being coated, is that right?

A. I would say that particular particle is collected on the surface of the article.

Q. Well, when would you say an article is being coated?

A. In my language, I would say when the article is receiving a sufficient amount of these particles so as to form on its surface a coating in the trade sense of the word.

Q. Well, you have seen coatings that are not continuous or uniform, haven't you?

A. They would probably not be coatings in the sense we talk about them in the painting business.

Q. You sometimes have mottled finishes, don't you?

A. They are usually paint droplets over paint droplets.

Q. Can your No. 2 System be used for that purpose?

A. Yes.

Q. Would you call that, the use of the system, for coating purposes?

A. Yes, sir.

Q. So that coating is a relative term, isn't it?

A. It would depend upon the connotation in which
528 you found it, sir.

Q. Likewise, discrete particles is a relative term, is it not?

A. I would say a discrete particle is a rather specific thing to me.

Q. Now tell us what it means to you.

A. It means the particle which is isolated from surrounding matter other than possibly air or gas in which it finds itself, being discrete in the sense of being isolated, unique, which perhaps would be a word to use.

Q. Yes. From the standpoint of this Starkey device, it has to be more than that, doesn't it?

A. A discrete particle certainly doesn't have to be more than that?

Q. It does not? I sort of recollect your saying something about the range of size of particles, discrete particles, being in the order of three mils or three one-thousandths. I thought you said something about that the other day.

A. I did, sir.

Q. Isn't that what you mean by discrete particles?

A. Each of those particles in a sense would be consid-
ered to be discrete.

Q. Didn't you say if you got down to about a third of that size it might be too small so you would get a dry
529 coating and if you got them too large you would get an orange peel?

A. I did, sir.

Q. So that there is a range of useful discrete particles as far as this electrotsatic spraying process is concerned, isn't there?

A. Yes, sir.

Q. Does the Starkey patent teach that range?

A. The Starkey patent relates to the No. 1 process which was a coating operation and had by this time become rather

well-known, and the reference is made for the purpose of establishing this patent in the field of the art, I would say.

Q. That is your explanation. Now, I would like to have the question repeated to you and see if you can answer the question.

(The referred to question was read by the Reporter, as follows:

"Does the Starkey patent teach that range?")

A. The Starkey patent does not specifically teach that range.

530 Q. Now, you gave quite a discussion about your work in making power packs safer for usage. Do you recall that?

A. I do, sir.

Q. I didn't gather from your testimony that you intended to convey the impression that when you went with Ransburg in 1943 there were no power packs that could be satisfactorily used. Am I correct in that assumption?

A. Would you repeat the question?

The Court: Read the question.

Mr. Meroni: I will restate the question. I think I was rather mixed up there.

Q. (By Mr. Meroni): What I am trying to find out is this: I would assume from what you did on power packs from the standpoint of making them safer, that you were trying to improve them from a safety standpoint. Is that correct?

A. That is correct, sir.

Q. There were power packs available in 1943 for commercial usage, weren't there?

A. In what field, sir?

Q. In your field.

A. No, sir.

Q. You mean to say that in—that prior to the time 531 you designed a safe power pack, the Ransburg Com-

pany never marketed an electrostatic system without your pack?

A. That is correct, sir.

Q. In other words, before the company could ever market any electrostatic coating system at all you had to first design a power pack for it?

A. That is correct, sir.

Q. Am I to understand there were no power packs on the market that could have been used for that purpose?

A. I did not make that statement, sir.

Q. Actually there were power packs available that were used in x-ray work and other work, was there not?

A. Power packs were available for use in those fields.

Q. You could purchase power packs in the order of 100,000 volts, could you not, in the open market?

A. At what current?

Q. At a current suitable for electrostatic coating.

A. That is correct, sir.

Q. Well, actually, insofar as your work on the Starkey Patent was concerned in 1943, wasn't it a fact that you considered the power pack shown in Fig. 9 to be conventional?

A. Conventional in the sense of the pack which had been used in electrostatic painting applications up to that time.

532 Q. So there was no novelty in the pack as far as the Starkey Patent is concerned?

A. As far as the Starkey Patent is concerned, there was no novelty in the particular pack that was used.

Q. Was it due to an inadvertence you happened to show a power pack that had an air core?

A. I cannot answer that question.

Q. You do not know?

A. I don't know.

Q. As a matter of fact, the type that would be usable would probably be one with an iron core, is that right?

A. That is correct, sir.

Q. Now, you have talked about conveyance. Before this Starkey Patent was filed it was conventional practice in the industry to use conveyors in spraying, was it not?

A. Yes, it was, sir.

Q. And also conventional practice to use flow regulators of various types, was it not?

A. Yes, sir.

Q. Are you aware of what size orifices can be used in air guns, air spray guns?

A. Generally speaking, sir.

Q. How low do they run usually?

533 A. They can go down as low as a thousandth of an inch, would say, sir.

Q. What would you say was the average size?

A. I would have no way of knowing, sir.

Q. Referring again to this catalogue of Ransburg, that you identified as Exhibit EEEE, and more particularly to pages eight and nine, it was old in the art prior to the Starkey, et al. development to use an electrostatic field to get this wraparound feature, was it not?

A. That is correct, sir.

Q. And that is clearly portrayed in the illustration on page eight of this brochure, is it not?

A. In the upper right-hand illustration, that is correct.

Q. Do these particles, referring to this illustration, when they flow past the article sometimes set up their own field?

A. Since they are charged, they would in a sense have their own field established, although that in all probability would be extremely small because the charge is small.

Q. That would be true of both the No. 1 and No. 2 systems, would it not?

A. That is correct, sir.

Q. So, it is correct to say that there is a field within

534 a field there?

A. There is a field that integrates into a single field due to the presence of the charges.

Q. In the operation of your No. 2 system atomizing heads, is it not a fact that the paint will be atomized and dispersed whether there is an object in front of the gun or not?

A. Generally speaking you would have to establish a field between the atomizing head and some object in the vicinity.

Q. Well, isn't the room the other end of the field?

A. Yes, sir.

Q. In other words, you didn't have to have an object in order for the atomizing head to atomize particles and disperse them?

A. To produce a coating on that object you do, sir.

Q. Ignoring the element of a coating, if you have an atomizing head and paint is flowing into it, and it just is turned down, you can atomize paint and disperse it, even though there is no object in front of you, can you not?

A. Not without establishing a field between that head and some object.

Q. Yes. But you could establish it between the wall over there, couldn't you?

535 A. That wall is sufficiently far away. You may have no field.

Q. If there is a ground area, the area can be grounded, can't it?

A. If it is sufficiently conducting.

Q. Isn't that in reality what is taking place?

A. It is rather hard and difficult to isolate in the sense you have asked me.

Q. Well, I notice the little hand gun you were operating over there, the new one that came out recently—You know what I mean?

A. Yes, sir.

Q. That thing squirts paint whether an article is in front of it or not.

A. Yes, sir.

Q. And it is atomizing—it atomizes and disperses, does it not?

A. Yes.

Q. And it collects wherever paint happens to lodge?

A. Where the field dictates the paint goes to, yes.

Q. So that the atomizing head doesn't know what article the paint is going to lodge on after it is atomized and dispersed, does it?

536 A. It has no way of knowing that, sir.

Q. So from the standpoint of the illustration, shown in Fig. 9, which I believe you said was diagrammatic of the various types of heads and systems shown in the Starkey Patent—is that correct, that statement? Did you say it was diagrammatic?

A. That is correct.

Q. From the standpoint of what is shown there, it would not make any difference whether there was an article, 310, there or not as far as atomization and dispersion of paint is concerned?

A. You would have to have a field established between that head and another object.

Q. Assuming the conveyor is grounded as shown here, and your other terminal is grounded at 321, you would have a field, wouldn't you?

A. If the proximity were such we would have such a field.

Q. Let's assume this is the arrangement you have here. You have a flat article on the conveyor that is grounded. You take that article off. That paint is going to be atomized at 317 and dispersed on the conveyor, 311, is it not?

A. That is correct, sir.

537 Q. So, as far as that illustration is concerned, it does not make any difference whether there is an article there or not?

A. It will go on a conveyor, that is correct, because a conveyor is grounded.

Q. In other words, when the conveyor brings an article under the atomizing head, then the article gets coated as it moves out of the field, the paint is dispersed on the conveyor. Is that correct?

A. That is correct, sir. If the conveyor is of this type that is positioned directly opposite the atomizing head.

Q. The situation would be a little different, wouldn't it, if you reversed the connections and the conveyor was not grounded?

A. You have reversed the connection on me but you have not said what the other connection—

Q. (Interposing.) Suppose the head was grounded and the conveyor was the hot side?

A. The situation as far as the atomization is concerned would then be the same.

Q. It would be the same?

A. That is correct, sir.

538 Q. I would like to call your attention to Interrogatory 23-C. But before doing that I would like to ask you: Did you have something to do with the preparation of answers to interrogatories or admissions in this cause?

A. I did not, sir.

Q. You did not?

The Court: That is Plaintiff's Interrogatories, 23-C?

Mr. Meroni: Yes, your Honor.

Q. (By Mr. Meroni.) We asked the defendant this question: "What are the upper and lower limits of the voltages at which atomization can occur in the suse of said

process in the spraying of all different types of liquid handled thereby?" And the answer was: "As indicated in the above answer to portion A of this interrogatory, electrostatic atomization of a given liquid occurs over a wide range of voltages, the extreme limits of which defendant has not explored."

My question now is: Have you now even as of this day explored the limits of ranges of the voltages usable?

A. We have not, sir.

Q. Now, referring to the confines of the two Starkey, et al. Patents, is there anything in either of those pat-
539 ents, without reference to something else, that says anything about what range of voltages can be used?

A. There is not, sir.

Q. Is there anything in either of those patents that tells you what voltage you can use other than high voltage?

A. Only by reference, sir.

The Court: Which patent was it, that reference to a hundred thousand volts?

The Witness: The patent was the patent covering the process described in Exhibit No. 7, sir.

The Court: That is the detearing?

The Witness: No; No. 1, spraying.

The Court: All right. And the other two patents refer to that patent. That is what you meant?

The Witness: Yes, as well with reference to other patents in the field, sir.

Q. (By Mr. Meroni.) Is there anything in either of these Starkey, et al. Patents that specifically tells you that you can use the voltage that is set forth in any other patent?

A. There—does not specifically tell you that, sir.

540 Q. Merely gives a cross-reference to some other patents among which you say is a patent on the No. 1 system, is that correct?

A. Could I see that to be certain?

Q. Surely, surely.

The Court: Three and four under this exhibit over here. (Referring to exhibit table.) I saw you lay them down.

The Witness: I have such patent here.

The Court: Let's refer to the exhibits.

(Witness tendered Exhibits 3 and 4.)

A. In both of the patents in question specifically with respect to Patent No. '536, reference is made to the Pugh Patent No. 1,855,869 and to method and apparatus for coating articles by Ransburg and Green, Nos. 2,247,963 and 2,334,648 issued in July of 1941. A similar reference is made to the same patent in the Patent No. '417.

Q. Is there anything in that reference that says you can use the same voltages that are disclosed in these other patents?

A. In this specific reference there is not. They are entered there, one reading in the art—I suppose you would go back to those patents as you would to a preceding

541 scientific paper and inquire of such background as might be of interest.

Mr. Meroni: I move to strike the last part of the answer as being volunteered.

The Court: The latter part will go out.

542 Q. Now, in Plaintiff's Interrogatory 25(a), (b) and (c) we asked these questions: "Does temperature constitute a factor in the spraying of liquid by Defendant's aforesaid process of airless electrostatic spraying and, if so, (b) to what extent and (c) if a range of temperatures is involved, what is the range?"

And the answer was: "25(a) Temperature of the liquid constitutes a factor in the spraying of the liquid in Defendant's process of airless electrostatic spray coating. (b) To the extent that it influences viscosity. (c) Defendant has

not explored the limits of the range of temperature involved."

Is it still true that the Defendant Dansburg has not explored the limits of the range of temperature that should be involved and would be involved?

A. That is correct.

Q. And is it still true that temperature is a factor?

A. That is correct, sir.

Q. Does either of the Starkey Patents in suit, Exhibits 3 and 4, make any reference to temperatures at all as far as you know?

A. They do not.

543 Q. In Interrogatory 24 of Plaintiff this question was propounded: "(a) Will Defendant's aforesaid airless electrostatic spraying process atomize all kinds of known liquid and, if not, (b) what are the limits of the range of liquids that can be atomized by such spraying process?"

And the answer was: "25(a) No; 24(b) Defendant does not know the limits of the range of liquids which can be atomized by such spraying process."

Would you say it is still true that Defendant Ransburg does not know the range of liquids that can be atomized by the spraying process of the Starkey et al. Patent, Exhibit 3?

A. That is correct, sir.

Q. Is there any disclosure, as far as you know, in the Starkey et al. patents, Exhibits 3 and 4, that make any reference to the limits of the ranges of liquids that can be employed?

A. No, sir.

Q. Is it not a fact that there are some liquids that you could not atomize?

A. That is correct, sir.

544 Q. Can you give us some instances?

A. Molton glass.

Q. Any others?

A. Tar.

Q. In Interrogatory 117 of the Plaintiff propounded to the Defendant we have this question: "(a) Was the Defendant ever advised by Dr. Emery P. Miller or anyone else that prior to October, 1943, it was old in the scientific arts to use an electrostatic field for effecting atomization and spraying of liquid particles and, if so, (b) What was the name of such person, (c) The identity of such prior use and (d) The date when such advice or knowledge was received?"

The answer given was: (a)(b)(c) and (d) Since coming into existence Defendant has known that it was old prior to 1943 to use an electrostatic field for effecting atomization and spraying of liquid. At least one of the officers of the Defendant possessed such knowledge at the time of Defendant's incorporation on January 1st, 1948."

Are you aware of that knowledge, Dr. Miller?

A. Which specific knowledge are you referring to 545 in your question?

Q. That it was old in the scientific arts to use an electrostatic field for effecting atomization and spraying of liquid articles.

A. Yes, sir.

Q. Do you agree it was old prior to October, 1943 to do that?

A. Yes, sir.

Q. Now, referring to Claim Two of the Starkey et al. process patent, Exhibit No. 3, and more particularly to the single step there recited we find this: "The step of maintaining between the head and the article and electrostatic field which electrostatically effects said atomization, dispersion and deposition."

Is it your position that the novel part of that claim was the deposition of the electrostatically atomized and dispersed particles?

Mr. Hume: Your Honor, I object to the novel part of the Claim. This witness hasn't qualified as being a claim reader, interpreting legal aspects of a claim. If he wants to frame his question in terms of facts that is another
546 thing, but when we get down to claims, as to what their legal effect is and whether novelty resides in the claim is purely a legal interpretive question, Your Honor.

Mr. Meroni: I am astounded at that in the light of the interrogation on all of these claims, element by element, that went on for hours yesterday, Your Honor. It seems to me that this witness is well qualified and at the inception he was asked—

The Court: I don't know that he covered the subject of novelty, what the novelty was. He was asked whether these factors were present in the figures of Exhibits 8A and 8B, 11A and 11B and 17A, B and C.

Mr. Meroni: He was also asked at the start, Your Honor, if he knew the art.

The Court: All right, I will be interested in you correcting me on that, my memory on that.

Mr. Meroni: I have a note here. Just a minute, I will find it.

The Court: All right.

547 Mr. Meroni: My recollection is—I can't put my finger on it right now, but I will—that he was asked initially if he made a study of the art and he said he had.

Mr. Hume: Your Honor, this question is directed to the novel part of a claim, and a claim is a legal statement which is to be interpreted in the light of legal considerations that concern claim writing and claim reading; and

to phrase the question on the basis of a novel part of a claim is improper for this witness.

Mr. Meroni: He was qualified on this basis and he has had with him, I believe, the whole time the prior art.

Mr. Hume: I don't direct my objection to any questions that deal with this witness' knowledge of factual statuses of matters.

Mr. Meroni: Here it is, Your Honor. I am reading from Page 229 of the record.

"Q. Did you have anything to do with the research that led up to the development of the No. 1 System?

"A. The No. 1 System was actually developed and
548 I helped advance it, I'd say.

"Q. Did you have occasion at that time to make a study of the state of the art generally as it existed in the commercial field with respect to electrostatic painting?

"A. After I came with the organization I did look into that art, yes, sir, and make myself acquainted with it."

Now, I am entitled to know in the light of his study and background whether he considers this part novel.

Mr. Hume: Your Honor, the question is still couched in terminology of the part of the claim that is novel, and I submit that that involves a legal interpretation of the claim writing. The testimony that he gave yesterday does not justify any basis for the calling of a conclusion of this kind.

The Court: Will you read the question and the objection?

(The Reporter read the following: "Is it your position that the novel part of that claim was the deposition of the electrostatically atomized and dispersed particles?

549 "Mr. Hume: Your Honor, I object to the novel part of the Claim. This witness hasn't qualified as being a claim reader, interpreting legal aspects of a claim. If he wants to frame his question in terms of facts that is

another thing, but when we get down to claims, as to what their legal effect is and whether novelty resides in the claim is purely a legal interpretive question, Your Honor.")

Mr. Meroni: May I make one further comment, Your Honor. You will recall, Your Honor, that in the extensive examination of this witness they endeavored to first show what the state of the art was by Chart 7, and also with reference to the spray gun system of Binks using air alone. Then they endeavored to show what Starkey had, then they endeavored to show where it was embodied in the No. 2 System. Now, they were trying to show what was new in the field as between what went before and what went afterwards. And they asked him about his claim. They went through all of these claims, element by element. And all I am asking him now is if he considers that a novel part of the claim. I don't think that requires any legal interpretation. That is a comparison with his back-
550 ground and knowledge.

Mr. Hume: Your Honor, these claims are combination claims, we submit, and where the novelty of a claim resides is purely a matter for this Court to determine. There are steps here that Mr. Meroni chooses to call the single step. It is phrased in the language of the step of atomizing, dispersing and depositing from a single field. But the point as to where the novelty resides is purely an interpretation of this legal document.

Mr. Meroni: I am not asking if it is invention, Your Honor. The prerogative of the Court is to determine whether it is invention. But this is a fact question which he can answer, whether it is a matter of fact.

Mr. Hume: This question is woven with all sorts of inuendo, and I submit it is an improper question.

The Court: I will overrule the objection. I believe the

witness can take care of himself. We don't have a jury here.

You may answer that, sir.

The Witness: Could I have the question read again, sir?

551 Mr. Meroni: Certainly.

(The Reporter read the following: "Is it your position that the novel part of that claim was the deposition of the electrostatically atomized and dispersed particles?")

A. Obviously, since I am going to be calling upon my background and my feelings in this regard to decide this question, in answering it I would have to go to the specification and read that specification, which I have done. In addition I would have to call upon my own background in the field and in my training as a physicist. I'd also have to call upon what reading I had done and what other people acquainted in the field had to say about it. And integrating all that experience, that reading, I am convinced that the steps of using an electrostatic field to atomize, disperse and deposit material represented a new and novel step in the art.

552 Q. You admitted before that it was old prior to October 1943 to atomize and disperse liquid particles, did you not?

A. That is correct, sir.

Q. And do it electrostatically, is that correct, sir?

A. Yes, sir.

Q. Now, when we add the word "coating" to that series of two things, you say, calling upon your background, that that is novel, is that correct?

A. That is correct, sir.

Q. Yet you admitted in connection with Figure 9 that the Starkey, et al. process would work equally as well as

far as atomizing and dispersing paint was concerned, whether it was coating an object or not, did you not?

A. This figure in my estimation is representative of a system of coating which embodies all of the steps of atomization, dispersion and application of that material under the influence of a single electrostatic field.

Q. Do you recall testifying during the deposition as follows:

"Q. 160: Then what, if anything, was considered by you and Mr. Starkey at that time to be sufficiently new about the idea that would cause you to record it?"

And your answer was:

"A. The concept of using electrostatic forces alone 553 to atomize, disperse and deposit these materials."

Do you recall that answer?

A. I do, sir.

Q. Now, you say, as to the No. 1 System, shown in Exhibit No. 7 that that is different because you use another means in the process of painting, namely, air means, to get the paint into the field, is that right?

A. This device in this system does not incorporate the atomization, deposition and the dispersion of materials by a single field.

Q. You are not using the forces alone to atomize, disperse and deposit paint, is that right?

A. That is correct, sir.

Q. Now, in the No. 2 System, such for example as shown on this Exhibit 17-B, wasn't it a fact that the electrostatic field alone, without the use of centrifugal force, was unable to throw paint at the article?

A. Could I have the question reread?

(The preceding question was read to the witness by the Reporter.)

A. This system represents a combination of actions and

steps, and when you omit any one of those steps, obviously the system is not going to work.

554 Q. Well, you are not using electrostatic forces alone in that system, are you, to effect painting?

A. That is correct, sir.

Q. And as I remember, the operation of this device, if you arrested the rotation, but left the paint on, and the electrostatic field on, the paint dripped out of it without being dispersed from the edge of the disk, is that right?

A. That is correct, sir.

Q. How fast do those disks turn?

A. The disks that were demonstrated generally use 900 rpm.

Q. Isn't that fast enough to effect some breaking up of liquids alone?

A. Yes, sir.

Q. Now, I hand you Exhibit 8-B. In that exhibit you have testified that Figure 9 is a diagrammatic illustration of the system that is common to all forms of the Starkey et al. device, is that correct?

A. That is correct, sir. This is a diagrammatic representation of the manner in which these various devices are to be employed.

Q. You have also stated before that if you had one point or one aperture where you had a globule or particle of
555 liquid, that that would atomize off at one point. Do you recall so stating?

A. I remember a statement concerning that matter.

Q. I beg your pardon?

A. I remember a statement concerning those points.

Q. Well, you don't deny the fact that the Starkey, et al. device will work if you only had one pin or one point, do you?

A. The process embodied in this invention does not visualize the use of a single point.

Q. Yes, but as far as the atomization, dispersion and coating, it would work, wouldn't it, as to one point or one globule of matter?

A. That is correct, sir.

Q. If you wanted more than one, you could add a number of points, couldn't you?

A. You would then be establishing a situation which would be under this particular patent.

Q. The patent doesn't teach how many to use, does it?

A. It indicates that generally it should be distributed over an extended atomizing zone, I believe, the patent.

Q. Well, does it give any dimensions or numbers in that regard?

556 A. It does not give any dimensions or numbers.

Mr. Meroni: I would like to have this chart marked as Exhibit FFFF.

(The plaintiff, for purposes of identification, handed the Reporter a certain document for marking, and which was by said Reporter marked Plaintiff's Exhibit FFFF.)

Q. We have here a chart, and I will ask you if you recognize on the right-hand side of this chart Figures 8 and 9 as being figures taken from the Starkey patent 2685536, Exhibit No. 3?

A. These figures appear to have been taken from that application.

Q. You are familiar with Mr. Zeleny's articles, are you not?

A. I am.

Q. You are familiar with these illustrations that are here portrayed as having been portrayed in the articles, or would you rather I showed you one of his articles to make a comparison?

A. There are similar figures in those articles and I presume you have taken it from them.

Q. Well, to save time, you have read the articles deal-

ing with these figures, have you not? Haven't you
557 got copies?

A. I have read the articles dealing with some of the figures.

Q. Have you got copies of them?

A. Yes, I have, sir.

Q. Now, according to Mr. Zeleny's article, he feeds liquid through this glass tube down to Point A, doesn't he?

A. That is correct, sir.

Q. And he has Point A as a part of the electrostatic circuit, which is grounded at G, is that correct?

A. That is correct, sir.

Q. And he states that "Upon activation of the electrostatic circuit, liquid is atomized and dispersed at Point A and collects on B." Are you aware of that?

A. I don't recall that he uses that specific wordage, sir.

Q. Do you recall his stating that it collects on B?

A. After a long time he states it does collect.

Q. Is that electrostatic atomization, dispersion and precipitation of liquid?

A. I have no way of telling from Zeleny's article, sir.

Q. His articles were published in the Physical Re-
558 view. Is that a well-known publication?

A. A very well-known publication, sir.

Q. Do you physicists subscribe to that, sir?

A. We do.

Q. Do you deny that he disclosed at least as early as 1915 the idea of electrostatically atomizing, dispersing and precipitating liquid particles?

A. In order to deny or not deny any statement, I have to rely upon my reading and interpretation of Zeleny's articles.

Q. Based on that, what would you say?

A. Since they appear in the Physical Review I feel I am qualified to read them and my understanding is that Mr.

Zeleny undertook this particular problem basically to investigate the nature of the discharge which occurs at a point in space. He started out by using, and this accumulates from a series of these articles, by using metal points. The metal points were sporadic in their current and emission, electrical emission, which occurred from them, so he conceived the idea of producing such points which would be reproducible which would remain clean without oxidation by using a capillary tube such as shown in A in this particular picture, and drawn down to a fine point, and pre-
559 senting there a liquid surface, and his whole interest now was to try to decide what would be the characteristic of the electrical discharge which would take place from such a pointed surface. He knew what they were in connection with the metals. They were sporadic and indefinite, and he hoped to find out additional information concerning this phenomena by making an arrangement of this type and he set up this device which is shown in Figure 1. The distances and number of points involved are rather definitely set out. A is a single small point which is presented as you have indicated to an electrostatic field, sir. His interest was in no way connected with the fact that liquid accumulated on B other than the fact that after he ran the thing for a long period of time, liquid appeared. To the best of my knowledge, he does not say how it got there, by what technique or method it got there. He simply cites it does occur there and this brings to his mind, at least the fact that this collection might be used for the determination of whether or not the current from Point A to Point B, thence is carried across there by air or by
560 these liquid particles, and as a result, a very long drawn-out examination where he observed Point A under a microscope whose magnification was quite large, and he detected certain disturbances at Point A and he drew certain conclusions concerning the electrical surface

density at that point, certain conclusions concerning the vibration of the liquid at that point, and certain conclusions concerning how the current is carried from A to B. He put nothing, as I could find, concerning the use of this process as a coating operation. Certainly, I would not have gone to Zeleny to learn what I did about electrostatic coating.

Q. It was available?

A. It was available if I wanted to go there.

Q. It was widely circulated, was it?

A. Widely circulated in the field, yes.

Q. He said in the article, you recall in this Volume 18, Page 75, "After the current from the conical form of discharge with alcohol has been allowed to flow for some time, the plate underneath the point becomes wet with a disk of liquid which has a diameter about equal to the distance between the point and the plate. From the amount of liquid thus carried over, it appeared possible that 561 the whole current from the alcohol point might result from the charges carried by minute drops leaving the charged surface and impinging on the plate."

Do you recall that?

A. I recall that statement, sir.

Q. Do you recall that he had numerous photographs showing the character of the discharges?

A. Which were not too clearly distinguished as being electrical discharges or liquid.

Q. But there are such illustrations?

A. Such illustrations as you have shown there in the article.

Q. When did you first become aware of that article or those articles of Professor Zeleny?

A. I knew Professor Zeleny was working in this field in 1931. I learned of it.

Q. Were you acquainted with him?

A. I was not acquainted with him but I knew of his work through another outstanding man in the field; Professor Lowe from the University of Southern California.

Q. Was Professor Zeleny well recognized in the field?

A. In the field of electrical discharges, he was.

Q. In that book of patents or material that you have
562 before you, is there a copy of the Heis patent?

A. There is, sir.

Q. Have you studied the Heis patent?

A. I have read the Heis patent, yes, sir.

Q. And that is Heis patent No. 1475995?

A. That is correct. I presume that is the one you are referring to.

Mr. Meroni: We have constructed what purports to be a model and I will ask the Court Reporter to make this for purposes of illustration and identification as Plaintiff's Exhibit GGGG.

(The plaintiff, for purposes of identification, handed the Reporter an object for marking, and which was by said Reporter marked Plaintiff's Exhibit GGGG.)

Q. Do you understand in Figure 3 of Heis, there is shown a head or applicator comprising two disks, 12 and 13, held together with spacers, 14, therebetween so as to define a peripheral discharge at 15?

A. I do not understand that this particular device is an applicator head at all.

Q. You understand it is an atomizing head?

A. I do not so understand.

Q. You say it does not atomize?

A. There is no indication in this that this device
563 is used in any way for atomization.

Q. Isn't it used to break up particles of gas?

A. Not specifically described as such.

Q. You say it does not break up gas particles?

A. It is not described as such.

Q. Do you understand that fluid is fed through the central opening into the space between the disks? Do you understand that much?

A. That is correct, sir.

Q. And do you understand that an electrostatic field is set up in the disk at the edge, with the voltage gradient at the edge?

A. There is no showing of that in Figure 3.

Q. Is it shown in Figure 4?

A. Yes, it is also shown in Figure 4.

Q. There it shows it in the circuit, does it?

A. It does. It also indicates that the fluid, as you have described it, is entering the slot rather than leaving it.

Q. In that particular form?

A. In the form indicated in the patent.

Q. Now, in the form shown in Figure 3, the fluid enters at 16 and progresses downwardly and then into the 564 passage, 15, isn't that correct?

A. That is correct, sir.

Q. So that the fluid there enters the opposite direction from what is shown in Figure 4?

A. Could I ask are you using the word "fluid" in the broad physical sense?

Q. In the broad sense, yes.

A. It does.

Q. Let's be in accord on that. I think it is common practice in the arts to refer to fluid as embracing both gas and liquid, isn't it?

A. That is correct.

Q. It is a generic expression for both?

A. That is correct.

Q. I have here a model which I would like to have you compare with Figure 3 and to state whether as far as the disk construction goes, you would consider it representa-

tive of the device. You may undo the screws. You might know that we just use the screws as spacers so it could be taken apart.

A. This device is generally the same as that shown in the Figure 3 with the exception of the fact that there is incorporated in these two disks a central cavity
565 which is not shown here specifically, and that the entrance tube is not specifically attached to the top disk, sir.

But it shows two disks that are held together with a spacer between them?

A. That is right, sir.

Q. And broadly that is what Figure 3 shows, is it not?

A. That is right. I don't know that the sizes are comparable, but generally speaking the structure is as shown.

Q. I am talking about the structure apart from any functions or purposes.

A. That is correct, sir.

Mr. Meroni: Now, then, while we are on that point, I would like to have this chart marked for identification as Exhibit HHHH.

(The plaintiff, for purposes of identification, handed the Reporter a certain document for marking, and which was by said Reporter marked Plaintiff's Exhibit HHHH.)

Q. Now, Mr. Miller, I would like to know if you remember or recollect during Mr. Hume's examination of you that he interrogated you about Exhibit 12?

A. I do, sir.

Q. You recognize the left-hand side of this chart, Exhibit HHHH, as being a reproduction of Exhibit No. 12?

A. It apparently is, sir.

566 Q. Now, on the right-hand side do you recognize the top figure as Fig. 3, being a reproduction of Fig. 3, of the Heis Patent No. 1,475,995?

A. I do, but I object to the legend you place on that figure.

Q. But disregarding the legend, you agree that the illustration is a reproduction of that drawing matter?

A. The drawing matter below the legend is certainly a reproduction of Fig. No. 3.

Q. Referring to the drawing matter on the lower right-hand part of the chart, under the heading "Electrostatic Liquid Atomizing and Spraying," do you recognize those as being Figs. 1 and 2 of the Zeleny publications?

A. They are figures which appear in the publication. I don't know that it is specifically Figs. 1 and 2. That could be checked.

The legend, likewise, I object to in Fig. 2.

Q. I didn't ask you about the legends; I asked you about the drawing matter. I understand you object to the legend.

A. That is correct, sir.

Q. Now, referring to the lower-most illustration, Fig. 2, do you recall from Professor Zeleny's articles the fact that he illustrated and mentioned these streamers that emanated from the end of the atomizing point?

567 A. As I recall, he describes this figure as a phenomena which occurred and which he observed under the microscope at the end of the tube, immediately above the letter "C" here, which tube was about a fraction of a millimeter in cross-section, and he does not specifically describe those points as being anything other than dark streaks which occur in his field of view.

Q. Do you object to his use of the microscope?

A. I do not, sir.

Q. Didn't you, as a matter of fact, find it necessary in connection with 18-B to amplify that? What was it? Twenty-five times?

A. That is correct, sir.

* * * * * *

568 Q. (By Mr. Meroni.) I think the Court would like to know in your own words how Mr. Starkey came to make this original conception back in '43. Do you recall testifying about that before?

A. I do, sir.

Q. Will you tell— Do you remember the paint-brush incident?

A. I do, sir.

Q. Will you tell the Court about it, please?

A. At that time in October, 1943, the Ransburg organization was preparing an exhibit of the No. 1 process which was to be taken to a metal show in Chicago, primarily to, shall I say "kick off" or introduce our process on a public scale to industry. As a part of that operation it was
569 our desire—of that preparation, perhaps, I should say, it was our desire to conduct a demonstration which would convey the advantages and the over-all operational characteristics of our process to the general public or people interested in the field. We constructed at that time a platform upon which there was located a high voltage unit and a column on which there was mounted a spray gun, and it was so arranged that a spray booth would be positioned diametrically opposite the gun, so that in a sense, or in essence, an object such as a small canister, a small can-type container, could be hung from a grounded support centrally in an electrostatic field and it was our purpose to project into that field the atomized coating material from the spray gun, and would have it collected on the can on all surfaces without rotating the can so as to portray to the observer the wraparound characteristics and, therefore, the increased efficiency of our process. Likewise, there was incorporated into the device a detearing arrangement to demonstrate the detearing process. In the process of preparing that particular exhibit there were a number of boys working on it. Mr. Starkey happened

to be one of them, he was charged specifically with the responsibility of painting or finishing that particular
570 device. There were other people present, working on the device, whose obligation it was to see that the electrical part of it was so designed and wired up that it would effectively work. Consequently, a number of people were working around the device at that time. As a part of the spraying—Pardon me—As part of his painting operation with the brush, Mr. Starkey was going over the control cabinet and the platform on which it was with a paint brush, actually finishing the preparation for the show. At the same time there was one of the other boys, as I said, involved in attaching and testing the high voltage supply. In the process, the paint brush Mr. Starkey was using came into the influence of the field and positioned opposite the metallic grounded side wall of the control panel, and he observed that the, under those circumstances, the coating material atomized and broke up off the ends of the brush and was collected on the surface, the grounded surface of the control panel, and the invention, I think, was born at that point.

Q. In other words, the paint brush was acting as an atomizing head?

A. In the sense we have been using "atomizing head" here, that is correct.

571 Q. And the bristles of the brush constituted points from which the globules of paint were atomized and dispersed?

A. That's correct, and a point to which the material was fed from the back side of that brush.

Q. Now, we have certain admissions here, I would like to read to you to see how they compare with your recollection of the facts as you stated them, sir.

"No. 14. The initial act of conception in connection with the subject matter of the Starkey and Ransburg Patent

in suit was the observation by Starkey of the behavior of a wet paint brush in an electrostatic field."

The answer was: "Admitted." Do you agree with that statement?

A. I do, sir.

Mr. Meroni: My attention has been called to the fact that I stated erroneously, and I want to correct it—it should have read:

"That an initial act of conception in connection with the subject matter of the Starkey and Ransburg Patent in suit was the observation by Starkey of the behavior of a wet paint brush in an electrostatic field."

Do you agree that is an accurate statement as far
573 as your knowledge goes?

A. That is correct, sir.

Q. Now, it didn't take two people to make that conception, did it; it only took one?

A. The development of the process of the system actually took two people in the form presented in this patent.

Q. As far as the paint-brush incident, that was only by Mr. Starkey?

A. That is correct, sir.

Q. 62: "For the purpose of this lawsuit, and in connection with defendant's previous admission 14 as to its use of a wet paint brush, does the defendant admit that when the paint brush was disposed in an electrostatic field, it emitted liquid paint which was atomized, dispersed and deposited on an article such as paper?",

The answer was: "No. However, defendant admits that when the paint brush was effectively arranged as one terminus of the electrostatic field and the article was effectively arranged as the other terminus of the field, liquid paint was atomized from the brush and the atomized particles were dispersed and deposited on the article."

573 Is that admission by the defendant in accord with your recollection of the facts?

A. That admission is, sir.

Q. 63: "Does the defendant admit with regard to its original paper Exhibit (PX-B)—"

Mr. Meroni: I might state for the record, your Honor, that will be produced in depositions and before I read this I had better call the witness' attention to what that was.

Q. (By Mr. Meroni:) Do you recollect when we took your deposition we had the original piece of paper that had been used in connection with the Starkey paint-brush incident?

A. That is not my recollection, sir.

Q. You have no recollection of that?

A. I remember your having a piece of paper, but that piece of paper was not a piece of paper used in connection with the Starkey paint-brush incident.

Mr. Meroni: I believe the evidence will show that. Do you disagree with that?

Mr. Hume: I think that piece of paper came subsequent to the activity there. Actually my personal recollection at the moment is a little hazy but the record will show 574 that I think it came a little later.

Mr. Meroni: You have the original exhibit PXB. You have the original. We only have a copy of it. I will pass that one for the time being. We can't find it right now.

(Mr. Meroni tendered photograph.)

Q. (By Mr. Meroni.) I hand you what purports to be a photograph of a piece of paper with some paint deposits on it, marked "11/5/43" signed, "Emery Miller, Al Starkey, and Hillman." Will you tell us what that is, this being a photographic reproduction furnished by Ransburg Counsel?

A. This is a piece of paper which was coated by being positioned on top of a conductor electrode in spaced relation to a paint brush wet with paint and which was charged to high voltage and it happened to have the date so indicated. I observed that and my signature appears on it.

Q. (By Mr. Meroni.) And the deposits on this came from the bristles on the paint brush?

A. That is correct, sir.

Q. Now, referring back to the Admission 63:

"Does the defendant admit with regard to its original paper exhibit (PX B) used in connection with the 575 initial paint-brush inception of the alleged Starkey, et al invention, the paint that was applied to the paper was electrostatically atomized, dispersed and deposited on the paper?"

And the answer was, "Yes."

Do you agree with that admission?

A. I do, sir.

Q. 64: "Does the defendant admit as to both of its two Starkey, et al Patents in suit, 2,685,536 and 2,794,417, that the earliest act of conception that it will rely upon herein is the paint brush activity commencing on or about October 8, 1943, and documented in a notebook as of October 29, 1943, with the following notation, 'Al Starkey suggested using the detearing action from the bottom of a brush as the atomizing agent to spray items passing under this arrangement'?"

The answer is, "Yes."

From your knowledge of the facts and to the extent you participated, do you agree with that admission?

A. I do, sir.

* * * * *

582 Q. Mr. Miller, I hand you this bulletin which has been identified as Exhibit IIII and ask you if you have seen it or one like it before, and, if so, to identify it.

A. I have seen a bulletin like this one before, sir.

Q. Do you recognize it as an official bulletin of the Ransburg Company?

A. Yes, it is, sir.

Q. Does it relate to No. 1 process equipment of the type you have been testifying about in this proceeding?

A. It does, sir.

Q. More particularly, does it relate to equipment such as that illustrated in these charts 17A, 17B and 17C which you produced here in Court?

A. It does, sir.

Q. On the next to the last page of this bulletin I noticed under the heading "Equipment" this statement: "Ransburg supplies the complete automatic coating equip-
583 ment consisting of the source of electrostatic potential, electrical controls, insulators, atomizing heads and coating material handling system."

Is that equipment that is supplied of the order that is shown in these charts, 17A, 17B and 17C?

A. That is right, sir. The equipment referred to that you have just read would be of that order.

Q. The statement further asserts: "All that the user needs to furnish is the conveyor, work holders and solvent ventilation means. Drawings of the proposed setup are included in our engineering services." And I assume that the conveyors and work holders that are alluded to are similar to those generally represented on these charts, 17A, 17B and 17C.

A. That is correct, sir.

Q. Now, it was my understanding that these charts, 17A, B and C, were produced under your supervision. Is that correct?

A. That is correct.

Q. How did you go about producing them?

A. Original drawings were made by our draftsmen and these drawings appeared as part of our service manual
584 for this type of equipment. When it was desired to have such drawings produced for reproduction here in the Court they were handed to our attorneys, and they in turn had them photostated, I understand, in Chicago.

Q. Did you have anything to do with the actual making of the charts such as the blowing up of the pictures and the coloring of them?

A. I had something to do with the coloring of them, sir.

Q. Tell the Court just what you did have to do in that regard.

A. I checked and approved the coloring and had the draftsman who was responsible for that coloring make certain changes that I thought were consistent with the program that was outlined here.

Q. Now, I take it you did that in collaboration with the attorneys?

A. I did, sir.

Q. Now, let's refer to this chart 17A. There you have three bell type atomizing heads, do you not?

A. That is correct, sir.

Q. Do you call them bell type or cone type? What is the terminology usually used?

585 A. We refer to it as the bell type system.

Q. Now, let's assume we took off two of these bells and just left one there. Would you get a satisfactory coating job on that sheet using only one bell?

A. On a portion of that sheet you would, sir.

Q. Isn't it a fact that when you operate the bell you deliver to the sheet a series of overlapping holes or circles of paint?

A. I would have to ask you to read that question again, please.

(The preceding question was read by the Reporter.)

A. The pattern of the bell on a stationary sheet would be an annulus or donut-shaped pattern, and the motion of the sheet through that pattern possibly could be referred to as a series of overlapping circles such as you referred to, I think.

Q. If you used only one bell wouldn't you have a situa-

tion where the paint that went,—where the middle of the donut is would be thinner than the paint where the annulus is?

A. That is correct, sir.

586 Q. So that in order to get a correct satisfactory painting job, you use multiple heads and lap them?

A. In order to obtain the ideal painting job which would have absolute uniformity we'd have to use the multiple patterns in order to overlap them. That's correct, sir.

Q. Just so that the Court will understand what occurs in coating when you use multiple bells, I am going to ask you to repeat just what transpires in the application of these circles or ovals of paint and how they are overlapped to make a uniform coating on the sheet.

A. The coating material, as previously described, is delivered from a source—in this Exhibit 17A shown in yellow—and is pumped by a pump unit, which is so designated on this exhibit, through a hose or carrying device to the back of the atomizing bell. That coating material appears on the inside surface of the atomizing bell as a small cross-sectional fluid flow, and that is spread out into a thin uniform film on the inside surface of the atomizing bell. At that point the film comes under the influence of the electrostatic field gradient, and it is atomized from there, dispersed into that field, and it is precipitated on the

587 surface of the article positioned opposite the atomizing device.

Q. In what shape?

A. In the special case of a flat sheet that shape would appear to be an annulus, which would essentially appear as a donut laid upon a sheet. And in other cases, however, it would take the shape of the object on the conveyor. In the case of the special object which is a flat sheet that annulus, if the sheet were stationary, would appear as a stationary annulus. As the sheet moved past the atomizing

head, obviously the sheet in a sense collects and integrates the coating material which is distributed to the various positions in that annulus. And the result would be that a coating would be applied to the sheet from the outside of the pattern at the top, let's say, to the outside of the pattern at the bottom. And that would have continuous, complete uniform coating throughout.

As pointed out, it would not be absolutely uniform in film thickness from the top to the bottom of that area, but might well be considered a satisfactory coating if one did not require such uniformity.

In the case of large flat sheets which are finished
588 white that uniformity might be apparent, and so, in order to avoid that lack of uniformity one combines several of these donuts in overlapping fashion so that by a process of integration the voids in one will be supplemented by the high spots in the others, so that from the top of the pattern of the outside—correction—from the top of the pattern of the first bell to the bottom of the pattern of the last bell you will have a completely uniform film thickness.

Q. In order to illustrate this point for the purpose of the record, would it be correct to say this: That if you lay down a donut of paint and you advance the donut on the sheet that it is being laid, as the succeeding donuts lap that you would have a multiple of thickness where the donut material exists but only a single thickness or a lesser thickness where the holes are if you had just a single bell? Is that a clear explanation of that?

A. I am sorry, sir. You lost me when you talked about the combining of the patterns and then ended up by referring to a single pattern.

Q. Well, what I am trying to say, let's assume you
589 have just one bell and you are laying down a series of ovals and your sheet is moving progressively for-

ward. As those ovals lap each other, where they lap over the hole there is less material than where they lap over the annulus of the paint; and isn't that the reason why you have to have staggered lapping using a multiple of bells?

A. If I might explain it in my own words perhaps that would be a better thing.

Q. That is all right.

A. One has from the bell an annulus which is in the shape of a donut. The hole in the donut may be large or may be small. Because you have a void, however, in the hole of the donut, a sheet or an area of the sheet which is carried diametrically through the donut will obviously only receive the coating material which is distributed into the side portions of the annulus.

Now, if you consider the same sheet to be moved through that portion of the donut which is above the hole then it will receive the coating material which is distributed into the solid portion of the annulus which is above the hole. Obviously, those two amounts of material would be different. And in the case of an object or a pattern with
590 a small hole they would be slightly different. In the case of a pattern with a large hole they will be considerably different.

And so, as you integrate that coating over a flat sheet you end up with a covered band of coating on the sheet which has a peak at the top and a peak near the bottom with a valley in the center, so to speak.

591 Q. Now, let's assume you are using only one bell and let's assume you start moving the bell farther and farther away from the sheet. How far can you move it away from the sheet and still deposit paint on the sheet?

A. That would depend upon the proximity of other objects in the vicinity.

Q. Well, even if you removed it so that the voltage existent on the bell would no longer be effective to project

the paint onto the sheet, wouldn't the paint, by virtue of the particles being oppositely charged, seek some surface and endeavor to establish a field of its own?

A. Those paint particles would originate primarily because of a field which existed between this bell and some other object in the vicinity. Now, if the sheet happens to be that object, then the paint which originates will follow those lines of force to the sheet. If you back the head sufficiently far away from the sheet, the floor becomes the closest object. It likewise now becomes an object to be painted so far as the bell is concerned. There is a single field which exists between the bell edge and the floor and the paint will come off and go to the floor.

592 Q. So that if we move the sheet out away from the bells, you don't interrupt in any way the atomizing and dispersing of the paint unless you turn off the field and turn off the paint, isn't that right?

A. You have destroyed your coating operation as far as that sheet.

Q. You are not coating the sheet but you might be coating the framework or the floor?

A. That is correct, but that is a different process.

Q. Well, you say it is a different process. It is not coating the sheet in that event? Is that clear?

A. That is correct.

Q. But it is coating something else?

A. Some other object, that is right, sir.

Q. And as far as the atomizer is concerned, it doesn't know what object is being coated?

A. Being inanimate it has no such knowledge.

Q. Now, let's proceed to the chart, 17-B, that shows a centrifugal type disk emitter instead of a rotary bell, doesn't it?

A. This is an atomizing disk emitter, that is correct.

Q. And it is a rotating disk?

A. Yes.

Q. And it effects discharge of paint to the edge of
593 the disk by centrifugal force?

A. It sends the material to the edge of the disk at a controlled rate by the centrifugal force due to rotation, that is correct, sir.

Q. Now, let's assume that you didn't have this reciprocator and just had the rotary disk. Can you imagine a condition of that sort?

A. Such a condition is shown in 17-C.

Q. But there you have the disk mounted at an angle. You have it tilted, do you not?

A. You assume that we stopped the reciprocation in this picture?

Q. Yes.

A. All right.

Q. And you disposed an object to be coated in front of the disk, say, a letter H, that was of a greater height than the dimension of the edge of the disk. Now, could you effect complete coating of that letter H if you didn't reciprocate the disk up and down?

A. Obviously if the letter H extended from the conveyor to the floor and the disk was stationary, I couldn't possibly coat that letter H completely.

Q. So that in order to effect a complete coating of an article that is of a dimension greater than the thick-
594 ness of the pattern of paint coming from the emitter, you have to provide some other medium of movement, do you not?

A. That is correct, sir.

Q. And that can be in the form of relative movement between the object and the emitter?

A. That is correct, sir.

Q. The Starkey patents make no disclosure of any such movement, do they?

A. No. This is certainly not a new invention with the Starkey patents since movements of all sorts for spraying devices were found necessary in past experiments.

Q. And the Starkey patent does not show any disclosure of using a plurality of emitters and having the patterns overlap, do they?

A. In the case of the Starkey patent, it specifically recites establishing an extended atomizing zone so that you essentially get the overlapping of the various elements of the atomizing zone to form over-all integrated pattern of the device.

Q. I didn't mean to interrupt you, but you don't mean to contend that there is any reference in the disclosure of Starkey to overlapping the patterns?

595 A. I don't know that it specifically exists there.

Q. Now, with reference to Exhibit 17-C, there you have an inclined rotary type of disk emitter, do you not?

A. That is correct, sir.

Q. And the action of that disk is such that on one side, let's say on the right side, where the disk is tilted downwardly as the paint is emitted, it covers the lower part of the articles and as the articles are moved you progressively cover the article in diagonal fashion upwardly with the rotation of the disk, isn't that right?

A. As the article is carried around the conveyor, that portion of the part which is coated, as it moves into the loop, will be that portion which is exposed to the pattern from the atomizing disk and if the disk is tilted as the object is carried around the loop, that portion shifts the pattern and the pattern in a sense moves up over the object and it completes its coating.

Q. In other words, the paint coats upwardly on the object as the articles relatively orbit around the disk?

A. Or downwardly.

Q. Depending upon the angle of inclination of the disk?

A. That is correct.

596 Q. So there you have to depend, in order to get complete coverage of the article, on an orbital movement of the article about the disk, do you not?

A. Relative movement of the two. I don't like the word "orbital," sir.

Q. Well, the articles go substantially in a circular path around the disk, do they not?

A. That statement is correct.

Q. And you try to get it as completely a closed path as is possible, do you not?

A. There are other factors which influence it. However, the path is closed.

Q. But it is desirable to get it close to the greatest extent you can, isn't that correct?

A. Consistent with the operation, yes.

Q. So there you have, in addition to the centrifugal action of the disk emitter, you have the problem of inclining it and you also have the problem of providing a specific type conveyor for causing the articles to navigate around the area of the disk, is that a correct statement?

A. You have combined so many factors on it there that I would like it repeated.

597 Q. I will take each one separately. First, you have a centrifugal disk?

A. There is a rotating disk, that is correct.

Q. And in order to get the liquid to the edge of the disk, you have to have rotation of the disk?

A. In this case, if the disk were stopped some of the liquid would flow to the outside edge because of it being tilted.

Q. But to give you the action you want to use a rotating disk?

A. We use the force of rotation to spread the film.

Q. That does it by centrifugal force, by virtue of this revolving at 900 rpm, does it not?

A. That is correct.

Q. In addition, in this particular embodiment, you have to incline the disk if you are going to cover the article from the top to the bottom, do you not?

A. Even with the disk inclined the article may be too large to be completely coated.

Q. Well, if the article is of a height that is greater than the edge thickness of the disk, you would have to incline the disk to get any sort of coverage?

A. No, that is not true, sir.

598 Q. Well, when do you have to incline the disk in order to get coverage?

A. When the spread and dispersion of the spray pattern from the edge of the disk to the object exceeds or is exceeded by the height of the object, then it becomes necessary to tilt the disk or go to some other method of adequately covering the entire object.

Q. Assuming that it does exceed the height, then it is inclined?

A. That is correct, sir.

Q. Now, in this particular embodiment, in addition to having the disk rotate, and having it inclined, you have to have a further condition of providing a specific type of conveyor which will bring the articles in a substantially closed circular path around the disk?

A. That is correct, sir, if you want to apply this method in production.

Q. Do you have anything like that disclosed in the Starkey, et al. patents?

A. Not the complete combination of elements you have recited, sir.

Q. You have other patents on those things, do you not?

A. That I cannot answer, sir.

599 Q. You are not acquainted with the patents your company has taken out on these devices?

A. I am, sir.

Q. Well, let's take this particular type of conveyor system and this inclined emitter. You have a patent disclosing that, do you not?

A. I am not absolutely certain that the patents disclose the inclined emitter.

Q. You have a patent that discloses the idea of the conveyor enveloping the disk, going substantially around it?

A. Such a patent does exist.

600 Q. And do you also have a patent that shows the use of bells?

A. We have, sir.

Q. Those patents aren't here in suit, as you understand?

A. To the best of my knowledge they are not.

Q. As a matter of fact, in these electrostatic devices for coating, when you turn off the juice, or the electric power, the particles that have been energized just prior to the turning off of the power, will seek a field even though the power is turned off, will they not?

A. You have raised the point of how fast the field disappears in such a device wherein the power is turned off.

Q. Yes.

A. And this would depend upon the construction of the voltage supply, the nature of the device connected to the voltage supplied, the size of the articles on the conveyor and many factors which would not permit me to answer your question categorically.

Q. Let me put it to you in another way: Let's assume we have some particles of liquid that have been charged that are in mid air, and at that instant you turn off the power.

A. Yes.

Q. By virtue of the fact those articles have been
601 charged, they, even though the field has been turned

off, will seek their own terminal, will they not? For deposition? They do not lose their charge right away?

A. They do not lose their charge, nor does the field disappear entirely instantaneously with the shutting off of the power supply.

Q. Well, as a matter of fact, in these processes, the electrostatic coating processes, it is possible for some of these particles to go astray from the normal field that is established, is it not?

A. If they go astray, they probably go astray by some extraneous force, if they go astray, by virtue of following the line of force that has gone astray.

Q. If they go astray, they still have their charge and will be deposited on something?

A. They will follow the electrostatic field to that object, yes.

Q. Isn't that called establishing their own field?

A. It would depend entirely, sir, upon whether or not they are still within the influence of this particular charged object.

Q. If they are outside the influence of it, they would establish their own field, then?

602 A. They would have to be separated from this by a conducting shield of some type in order for that condition to exist.

Q. Well, if you take the object away, they could discharge onto the conveyor, couldn't they?

A. Then the field exists between the atomizing device and the conveyor.

Q. The conveyor might be a ground?

A. The conveyor normally would be a ground, yes.

Q. Now, referring to this photograph that you produced yesterday, Exhibit 18-B, this photograph makes it perfectly evident that the streamers are not uniform, nor is the spacing uniform. Isn't that correct?

A. The spacing is not uniform, sir.

Q. So that the points of atomization are not equally spaced, are they?

A. They are not, sir.

Q. And in the actual use of this device, that spacing constantly is changing, is it not?

A. It could be, sir.

Q. Well, there is nothing mechanical to fix the spacing, is there?

A. Nothing mechanical, sir.

Q. In the Starkey device and, for example, as ex-
603 emplified by your models, Exhibit 9, the spacing of the points of atomization is more or less predetermined by the pins or the needles?

A. And other factors, sir.

Q. But you do have equally spaced or substantially equally spaced pointed needles in that device, do you not?

A. That is correct, sir.

Q. And on each of those points a particle or globule of inert liquid material will form during the electrostatic process, isn't that right?

A. There is a site of atomization so formed, sir.

Q. Well, doesn't the drawing of the patent, Exhibit 3, actually show in 5—

The Court: (Interposing.) Exhibit 8-A.

Q. (Mr. Meroni continuing.) Fig. 5 and as exemplified by Chart 8-A, doesn't it actually show the paint globules, 217, on the tips of the pin?

A. Is that during operation you are referring to, sir?

Q. Well, at any time they are shown in this drawing as being located on the ends of the pin, isn't that right?

A. That is correct, sir.

Q. And is that paint at 217 atomized during the operation of the device?

604 A. It is, sir.

Q. And Fig. 1, you have points or globules of paint that are located at spaced apertures, isn't that right?

A. That is correct, sir.

Q. And the spacing of those apertures predetermines the spacing of these globules, isn't that right?

A. That is correct, sir.

Q. Now, in this device of the plaintiff, Exhibit No. 14, will you point out to the Court by pointing to it, any spaced points along the periphery of the disk on which paint can collect, such as 217, 17, 117, of the Starkey Patent?

The Court: Exhibit A, he is referring to.

Q. (Mr. Meroni continuing.) Referring to Exhibit A.

A. There are no—

The Court: Interposing.) He is now handing the witness Exhibit 14, isn't it?

Mr. Meroni: That is correct, the witness has in his hands Exhibit 14 which is the plaintiff Binks' device here charged to infringe.

The Court: Do you recall the question now, sir?

605 The Witness: I believe so.

A. There are no such mechanically spaced projections or orifices which would determine the location of those sites.

Q. Now, I hand you a copy of the Starkey, et al apparatus, the Patent No. 2,794,417, Exhibit 4, and call your attention particularly to Claim 4. Do you have that claim before you?

(Witness tendered Exhibit 4.)

Q. Do you have it before you now?

A. I have it now, sir.

Q. Now, you will note that claim specifies "said points being sufficiently close together to permit the coating material to bridge the spaces therebetween." Do you notice that statement in that claim?

A. I do, sir.

Q. And by the way, do you understand that is the only claim of that patent that the plaintiff is here charged to infringe?

A. That is my understanding, sir.

Q. Now, bearing in mind that statement, I hand you Exhibit No. 14, which is the plaintiff's atomizer, and ask you to point out to the Court where in this piece of 606 apparatus is there any such points?

A. I believe the claim calls for distributing coating material to an extended atomize zone where it is atomized from a plurality of spaced points. Now, on this particular device, those points would be formed by the liquid itself as it comes out of this device.

Q. The part I read to you was the points being sufficiently close together to permit the coating material to bridge the spaces therebetween. Can you put your finger on that device on any such points?

A. The points referred to here are not a part of this device.

Q. And the device you are referring to is Exhibit 14?

A. That is right, sir.

Mr. Meroni: I would like to have the Court Reporter mark for purposes of identification at this time as Plaintiff's Exhibit JJJJ a copy of the Ransburg Patent No. 2,658,009.

(The plaintiff, for purposes of identification, handed the Reporter a certain document for marking, and which was by said Reporter marked "Plaintiff's Exhibit JJJJ.")

Q. (By Mr. Meroni.) Mr. Miller, I hand you a copy of this Ransburg Patent 2,658,009, identified as Plaintiff's Exhibit JJJJ, and ask you if you are familiar with the 607 subject matter of that patent.

A. Generally speaking I am familiar with the subject matter of this patent.

Q. And you note that it issued on November 3, 1953

which is ahead of the issue date of the Starkey Patent in suit? Is that clear from the patent it issued ahead?

A. I note the issue date is November 3, 1953.

Q. And that the application was filed May 13, 1948.

A. That is correct, sir.

Q. Now, in the first paragraph of that patent, you notice there the statement, "This general process of applying coatings is disclosed in the U. S. Applications of William A. Starkey, et al., Serial No. 556,390, filed September 29, 1944."

I hand you a copy of the Starkey Patent process, Exhibit 3, and ask you if the application of that patent is the one referred to in the Ransburg Patent Exhibit JJJJ?

A. That appears to be the case, sir.

Q. To put it in different language, this Ransburg Patent is also asserted to embody the process of the Starkey, et al. patent in suit, isn't that correct?

A. I would have to have that question read over, sir.

608 Mr. Meroni: Will you read the question to the witness, please?

(The preceding question was read by the Reporter.)

A. I can't say specifically; the patent certainly refers to this in the wording of the first paragraph.

Q. Does the process in the Ransburg Patent 2,658,009 embody the step of maintaining between the head and the article an electrostatic field which electrostatic field effects said atomization, dispersion and deposition?

A. Such may be disclosed here. I do not know if the patent claims that, however.

609 Q. Well, let's look at Figure 1. Doesn't that figure disclose that step to you in the light of your knowledge of that patent and this art?

A. This shows a figure in which coating material is presented to an electrostatic field and in which that ma-

terial is atomized, dispersed and precipitated on an article oppositely disposed.

Q. And doesn't this patent specifically set forth the voltage that is required to do that? Do you recall, or would you have to read the patent?

A. I would have to read the patent to answer your question specifically, sir.

The Court: It will speak for itself if you offer it in evidence.

Mr. Meroni: I will, Your Honor. I just thought I could save time.

The Witness: There is a statement in Column 4, Line 57 which says: "With 60 kilovolts applied to the tube." So I presume that some voltage is referred to in that patent, yes.

Q. (By Mr. Meroni.) Now, in this particular disclosure of this electrostatic process you have a single 610 atomizing point at 216, 16—let's confine it first to 16. At 16?

A. That is the orifice from which the coating material issues, sir.

Q. So that you can with a single orifice have an electrostatic atomization, dispersion and deposition of particles if you have got the proper electrostatic field?

A. That is correct, sir.

Q. Would it make any difference if the tube containing the orifice 16 was made of glass?

A. It would, sir.

Q. It could be made of glass and still work, could it not?

A. Depending upon the cha acter of the liquid it might work, yes.

Mr. Meroni: Your Honor, we are not going to offer these at this time. I thought it would keep the record straight if I offered all these things in my case.

Q. I now hand you a copy of another patent of the Ransburg Company which has previously been identified during the depositions as Exhibit O and, which has
611 been taken out in the name of Mr. Smart and Mr. Juvinall, Patent No. 2728606,—there is a copy of that, Your Honor, I believe in that binder you have there, 2728606—and ask you if that patent doesn't disclose one of the Ransburg rotary disc type of electrostatic emitters?

A. It does, sir.

Q. It is my understanding that that is one of the first patents that was obtained by the Ransburg Company showing the rotary disc type emitter. Does my understanding agree with your own?

A. This would be in the group of patents which originally is perhaps described as one of the first, yes.

Q. Now, you didn't mean to intend by your direct examination to convey the impression that the No. 2 process of the Ransburg Company was the cure-all for all spraying problems, did you?

A. No, sir.

Q. As a matter of fact, there are many types of articles which do not lend themselves to satisfactory coating by the No. 2 process, isn't that correct?

A. There are some such articles, sir.

Q. Well, for example, let's assume you have a pail
612 and you want to cover the inside of a pail. You couldn't do that with the No. 2 process unless you put the emitter down inside the pail, could you?

A. That is correct.

Q. And likewise, if you had an article with a very sharp edge, with a right angle shoulder or flange leading into that edge you couldn't satisfactorily cover the flange or shoulder at right angles to the surface being coated, could you?

A. With adequate modification of the process that can be done, sir.

Q. Well, as a matter of fact, don't they frequently have to use what they call a touch-up procedure with the No. 2 System?

A. That is correct, sir.

Q. And they touch-up frequently with air guns, don't they?

A. They do, sir.

Q. Yesterday I examined you concerning this chart, Exhibit 7, which purports to show your No. 1 type of installation. You recall my showing this to you yesterday?

A. I do, sir.

Q. And at that time I asked you if paint collecting on the green bars would be atomized and, as I recall it,
613 you said there would be a tendency for the paint if it did accumulate on the bars to slide downwardly and then it might atomize. Do you remember that?

A. I said that then it would come off in globs or particles, yes.

Q. How about paint accumulating on these sharp fine wires that are carried by the bars?

A. They likewise might run down to the bottom of the wire and be globbed off the end of the wire.

Q. They likewise might do that, but being a sharp edge isn't it more likely that they would be atomized off of that edge?

A. That depends on many things, sir.

Q. But you wouldn't say that such particles would not be atomized off the wires, would you?

A. If the conditions were correct that might happen, sir.

Q. And if that happened the particles would be dispersed and would be applied to the article being coat would it not?

A. Or they might go off the wire to the wall of the booth there also.

Q. But they could lodge on the article being coated, couldn't they?

614 A. That is correct.

Q. Now, yesterday when I was interrogating you you asked me what I meant by atomization. Do you remember that?

A. I certainly do, sir.

Q. As far as this electrostatic art is concerned, is there more than one kind of atomization?

A. I think generally the term "atomization" would have to be read in the connotation of the particular application that you were speaking of, sir. And in the case of painting, coating objects as we are doing here, coating objects with paint, that implies to me a suitable breakup so that you get the type of finish that you want on the surface.

Q. Well, you don't understand that the Starkey Patents are limited to paint, do you?

A. The application of coating, sir.

Q. And that coating could be ink or wax, according to the Starkey disclosure, couldn't it?

A. That is correct, sir.

Q. You might even have a coating of alcohol, might you not?

A. So far as the Starkey Patent is concerned, I doubt if alcohol would constitute a coating.

Q. Well, if you sprayed a coating of alcohol it
615 would remain there unless it evaporated, wouldn't it?

A. It undoubtedly would evaporate.

Q. Well, shellacs have alcohol in them, do they not?

A. Shellac and alcohol are two different things.

Q. Well, do you have any coating where there is alcohol as a carrier?

A. Alcohol is a portion of the shellac. Normally the shellac resin is brought into solution in alcohol.

Q. But you have endeavored throughout your direct examination to tie the Starkey Patent up to paint.

A. To coating, sir.

Q. Yes. There isn't one word in the Starkey Patent that says it is particularly desirable for use in paint coatings as distinguished from any other type of coatings, is there?

A. Not directly, sir.

Q. As a matter of fact, aren't you aware of the further fact that in this electrostatic field of atomization of liquid particles it was old in the Littlefield Patent to atomize liquid particles electrostatically, and it was also old in the Darrah Patent to do it?

A. In the Littlefield Patent the atomization, as I read this patent, occurs from the coating material—pardon
616 me—the liquid material that is being used in that particular case being emitted from an orifice, hitting certain blades in the same sense as water coming out of a spray nozzle on the end of a hose is broken up.

Q. There is an electrostatic field there, isn't there?

A. That broken up material is then supposed to be in the electrostatic field.

Q. There is an electrostatic field in the area of the orifice, isn't there?

A. That is correct, sir.

Q. Now, are you aware of the fact that we have an admission in this suit in connection with interrogatory No. 152 that the Darrah Patent does disclose atomization of liquid?

A. I believe that is correct.

Mr. Meroni: Interrogatory 152, Your Honor.

Q. Let me refresh your recollection on that. In connection with Defendant's answer to Interrogatory 117

wherein the defendant has known that it was old prior to October, 1943 to use an electrostatic field for effecting atomization and spraying of liquids: (a) What is the name of the officer or officers who had such knowledge;
617 (b) What is the identity of the source or party or persons from whom such knowledge was derived; and (c) Was any of such knowledge acquired in written form or reduced to writing; and (d) If so, what is the identity of each and all such papers in writing bearing in any way on such knowledge?"

Answer: (a) E. M. Ransburg. (b) (c) and (d): Such knowledge was acquired from the United States Patent to Darrah, No. 1958406 cited by the Patent Office examiner in the file wrapper of Starkey Patent No. 2685536 in suit."

Does that refresh your recollection in that regard?

A. That is correct, sir.

Q. And you admit that Darrah does disclose the idea of an electrostatic field of atomizing and dispersion of liquid particles?

A. I would say he does, yes.

Q. Have you in the course of your work for the Ransburg Company ever undertaken to purchase any patents for the company or acquire any patent rights for the company?

A. Personally you mean, sir?

Q. Yes.

A. I have not.

618 Q. Have you participated in such proceedings?

A. To a minor degree, sir.

Q. By the way, referring again to this Ransburg Patent 2658009, Exhibit JJJJ, is it true that in addition to the normal field for electrostatically atomizing, dispersing and depositing the liquid there is an auxiliary field shown?

A. There is introduced into the apparatus and device an electrode which is maintained at a different potential from the central orifice from which the coating material flows,

and in that sense the two fields combine and integrate into one field. As in any electrostatic case the shape of the electrodes between which the field is established establishes the shape of the field, the potential of those electrodes likewise will influence the shape of the field.

619 Q. According to this patent, reading from Column 2 of Page 1, Line 8, "It is an object of the present invention to provide an electrostatic method and coating apparatus of the character * * *." Let me correct that. "It is an object of the present invention to provide in the electrostatic method and coating apparatus of the character above set forth a secondary stabilizing field adjacent the electrostatic spray atomizing projecting and depositing field."

Isn't it perfectly clear that it is treated as a secondary field, apart from the main field in that patent?

A. It says "secondary field" and doesn't say anything about it being apart from the main field.

Q. It is characterized as a secondary field?

A. Yes, as a secondary field.

Q. The fact that you use such a secondary field, does that detract from the efficiency of the main field?

A. The secondary field becomes part of the main field, sir.

Q. Does the fact that you incorporated that so-called secondary field in this process of Ransburg detract from the operation of the device over what would be accomplished if it wasn't there?

A. It certainly doesn't detract from the operation.

620 Otherwise it wouldn't be much of an invention, I wouldn't think, sir.

Q. So whether you have one or two fields, as far as the practicing of the process of electrostatic depositing, or electrostatic atomizing—let me start over again.

So that as far as the use of a field for atomizing, dis-

persing and depositing fluid is concerned it doesn't make any difference whether you have one field or several fields, does it?

A. It does with regard to the origin source and the operation of the over-all method which requires establishing a single field between the site or point of atomization and origin of the coating material, and the extension of that single field from that point to the object being coated.

Q. Well, let me put it another way: The fact that you have got several fields here in Ransburg doesn't in any way detract from the operation of electrostatically atomizing, dispersing and depositing the liquid material?

A. In so far as you have a secondary field, that situation is true, sir.

Mr. Hume: May we have the record show what you mean by "here in Ransburg"?

621 Mr. Meroni: It is the same Ransburg patent, JJJJ, that I was examining this witness about right along.

Q. You so understood it, did you not?

A. That is correct.

* * * * * *

Redirect Examination by Mr. Hume.

* * * * * *

623 Q. Now, in reading over the testimony that was given yesterday did you find an answer that you wanted corrected?

A. I did, sir.

Q. Will you tell us what it is, please?

A. It has to do with the size of orifices in a spray gun.

Q. Where does that question that was asked appear and tell us what the question was, please?

624 A. The question appears on the bottom of Page 532. The question was "How low do they run usually?" Perhaps I had better read several previous ques-

tions in order to put the answer in context. The question above that was:

"Q. And also conventional practice to use flow regulators of various types, was it not?

"A. Yes, sir.

"Q. Are you aware of what size orifices can be used in air guns, air spray guns?

"A. Generally speaking, sir.

"Q. How low do they run usually?

"A. They can go down as low as a thousandth of an inch, I would say, sir."

I would certainly like that question to read they can go down to thousandths of an inch, indicating they can be of the order of ten or fifteen or twenty thousands.

• • • • •

630 *Recross Examination by Mr. Meroni.*

Q. I show you Ransburg Patent 2,658,009, Exhibit
631 JJJJ, and ask you if the orifice, 16, was made of the same size as the orifice that is used at A in Zeleny, how long it would take to paint, using the Ransburg device.

A. If the orifice were made of the same size as that indicated by Zeleny, and I presume you would pick one of the various sizes he illustrates and talks about, the time would be shorter by the amount dictated by the applied feeding device at the controlled rate, as indicated in this device.

Q. Well, how much shorter? Would it take a half day, quarter of a day, or all day?

A. I have no way of telling since I do not know what the pressure would be in this particular case, or what the delivery would be.

Q. Do you know of anything in that patent that tells you what size the orifice has to be?

A. I would have to check that, sir.

Q. Do you recall if there is anything from your knowledge as to that?

A. As of the moment, I do not recall such disclosure.

Q. Is there any statement in any of the Starkey Patents in suit, two Starkey Patents in suit, Exhibits 3 and 4, as to what size the orifices have to be in terms of unit of
632 measurement?

A. Perhaps I had better clarify my last statement.

Q. Well, before you do that, in order to keep the record straight, I will have this question read to you and, then, you can clarify your previous one, if that is agreeable to you.

A. Fine, sir.

The Witness: Will you read the last question to me?

(The preceding question was read to the Witness by the Reporter.)

A. There is no specific disclosure as to the size of the orifice in the Exhibit No. 3 patent and I would suspect that the same is true in Exhibit 4.

Q. Now, referring back to the previous question, having to do with Exhibit JJJJ, is there a reference to size in that patent? You were going to clarify your answer.

A. As I find it in column three, that the tube, 12, is referred to as being 3/16 inch outside diameter, and it recites that the outer nozzle, or tip 14, is formed by beveling the outer surface of the tube from a point adjacent the end, gradually toward the end and toward the interior sur-
633 face of the bore 15 (the bore being of a diameter on the order of 1/16 inch).

Q. Is that dimension critical?

A. That dimension is critical from the standpoint it must be correlated with the rate of feed, the rate of controlled feed to the orifice.

Q. Well, is there any attempt made in the Starkey

Patent as far as you know to correlate the size of the orifice to the rate of feed?

A. Only insofar as the patent discloses a system, all of which factors would have to be correlated to make the system operative, I presume.

634 Q. But there is nothing stated dimension-wise?

A. Nothing stated dimension-wise.

* * * * *

DONALD COLIN HOWARTH, a witness called by the defendant, being first duly sworn, testified as follows:

* * * * *

641 *Cross-Examination by Mr. Meroni.*

Q. Are you the same Mr. Howarth that testified in a deposition in these proceedings on February 4, 1958?

A. Yes, I am.

Q. I hand you what purports to be a bulletin of the Ransburg Company on the No. 2 System identified as Plaintiff's Exhibit JJJJ, and ask you if that is a sales bulletin of your company with which you are familiar?

A. Yes, it is.

642 Q. Does it refer to equipment of the type that you referred to in that two and a half million dollar figure?

A. It refers to some of it.

Q. Well, does that figure include the leasing of equipment such as is embraced in that bulletin?

A. Yes, it does.

Q. Now, in the two and a half million dollar figure you referred to in every instance has the equipment been leased?

A. Yes, it has.

Q. And as far as the No. 2 process equipment is concerned, would you say that this description appearing on

the next to the last page of that bulletin, quadruple I, is properly descriptive: "Ransburg supplies the complete automatic coating unit, consisting of the source of electrostatic potential, electrical controls, insulators, atomizing heads, and coating material handling system"?

A. Yes, it would.

Q. And as to those systems, does the user or licensee usually furnish the conveyor, workholders, and the solvent ventilation means?

A. Yes.

Q. And as to those leased and licensed systems, does your Engineering Department supply service, particu-
643 larly with regard to drawings and the set-up of equipment?

A. Yes.

Q. Is your field of operation limited to only the No. 2 System or have you also participated in the licensing of the No. 1 System?

A. I have also participated in the licensing of the No. 1 System.

Q. Then this is still an item of business with your company, isn't it?

A. Yes, it is.

Q. Do you still do some volume in it?

A. Yes.

Q. Roughly, can you state what percentage the volume is on the No. 1 System?

Mr. Hume: Your Honor, I object as being irrelevant. It doesn't tend to prove or disprove any issue fact in this case.

Mr. Meroni: I believe it tends to show the relationship of this two and a half million dollar figure to the over-all business, your Honor.

The Court: He has made a representation here.
644 The witness' answer is that two and a half million dol-

lars has been the income from these three hundred licensees, and I believe they would be entitled to break it down. I will overrule the objection.

Mr. Hume: Those are all confined to the No. 2, your Honor. This isn't a breakdown of that figure. This is other business.

The Court: I see. Is that your understanding of it, or would you think it was in the two and a half million dollars?

Mr. Meroni: No, your Honor. I admit that what counsel has said to the Court is accurate, that the two and a half million dollar figure was limited to the No. 2 System. That was my understanding, and I didn't intend—

The Court: It would be improper cross-examination at this time, wouldn't it? If you will state your purpose in it, show the relevancy of it—

Mr. Meroni: I think it is proper to show the relationship of that two and a half million to the over-all business of the company and find out what proportion it is with regard to the No. 1 System. It is only part of the story.

645 I think they are examining this man as a salesman of the company, and we are entitled to show the picture.

The Court: What is the relevancy now? Would you put your finger on it for me?

Mr. Meroni: The relevancy?

The Court: Yes.

Mr. Meroni: Well, they are trying to make it appear that the No. 2 System is a cure-all for all painting problems, and the No. 1 System is still a major item. And in submitting this two and a half million dollar figure they are trying to overwhelm the Court with the fact that all these companies are taking the No. 2 System which is the cure-all without showing to the Court that they are still selling the No. 1 System to these same licensees.

The Court: All right, we will overrule the objection.

You started to say something, Mr. Hume?

Mr. Hume: (Negative nod.)

Mr. Meroni: Will you read the question?

(The Reporter read the following question: "Roughly, can you state what percentage the volume is on the No. 1 System?")

646 A. Dollarwise about 15 percent.

Q. And that would be over and above the two and a half million dollars?

A. No, sir.

Q. Would that be included in the two and a half million dollars?

A. No, sir.

647 Q. Well, is the revenue for this 15% in addition to the $2.5 million?

A. Yes, the 15% is a percent of the total revenue.

Q. And would it be correct to say that many of these licensees that you mentioned here have both the No. 1 and No. 2 processes?

A. Certainly some of them do.

Q. You say you have been employed by the company since January of 1948?

A. Yes, by Ransburg Electro-Coating Corporation.

Q. Are you in charge of the installation and service and purchase and manufacture of equipment and the sales engineering, labor and drafting?

A. Yes, I am.

* * * * * *

804 Mr. Meroni: Your Honor, this morning I offered as OOOO Pages 1 to part of Page 28 of the Darrah deposition. I was under the impression opposing counsel might offer the balance of it, but since then I have concluded I would like to offer certain excerpts which are 805 rather short and I would like to read them into the record. On Page 42, the lower part of the page:

"Q. Now, when you used the red ink was the liquid medium employed with the red ink in all instances water?

"A. As far as I recall, yes.

"Q. Now, what did you find out when you ran the tests with oil?

"A. Similar results.

"Q. What kind of oil did you employ?

"A. I can't tell you now what I used. I think probably some oil from around the house.

"Q. Lubricating oil?

"A. Yes.

"Q. Was this transformer that you employed capable of producing different voltages?

"A. Yes, that's right.

"Q. What kind of a transformer was it, do you know?

"A. I think it was made by the Thor Company.

"Q. What voltages could be realized with its use?

806 "A. Well, as far as I can recall, somewhere in between 10,000 and 50,000, something of that range.

"Q. Did you ever use the red ink in conjunction with oil?

"A. No, as far as I recall."

Now, turning over to the bottom of Page 44:

"Q. Now, referring once more to the use of that red ink, a piece of paper was put in front of the nozzle to determine the shape of the pattern, I think you said, when Mr. Meroni asked you something about whether that was in the area of the field. Now, would you take that Exhibit UUU that you have identified here and would you draw on there with this red pencil just where the paper was put?"

I might say that UUU has been offered in evidence.

"A. I can only guess it at this time, but I would say here (indicating).

"Q. So the red mark you have put on Figure 1 represents the disposition of it?

"A. Approximately.

"Q. And you would say that was how far away from the nozzle in inches?

807 "A. You are getting very specific for something that happened 30 years ago. As a guess, I would say between two and four inches."

Turning to Page 46, a further excerpt:

"Q. And at what point would it coat the ring and at what point would it not coat the ring?

"A. Well, I had to adjust that back and forth. I can't tell you the exact point.

"Q. Referring now to your patent once more, Plaintiff's Exhibit UUU, and particularly, say, to Figure 1 thereof, did you ever determine whether or not the liquid would flow out of the nozzle 4 when there was no voltage on at the time, the potential was disconnected?

"A. With a very fine point it would flow very slowly, sometimes a little drop forming on the end.

"Q. It would ooze out of that little capillary opening of the tip?

"A. Yes.

"Q. And was that adjusted by the liquid head you had provided?

"A. Well, that would control it.

"Q. That would control it?

"A. Yes."

808 Now turning over to Page No. 48, and this is on redirect examination by Mr. Meroni, as follows:

"Q. On this Exhibit UUU you drew a red line in Figure 3?

"A. Figure 1.

"Q. In Figure 1? Thank you. You drew a red line

there which intersects the spray. That is the line you drew, isn't it?

"A. That's correct.

"Q. Would you mark the line 'paper'?

"A. Yes.

"Q. And would you also mark the red liquid particles that were being sprayed on the paper, if you can, from this drawing? Mark the red liquid particles.

"A. Well, I can only approximate it and just show dots, if you want.

"Q. Well, will you just write there 'red liquid particles'?

"A. All right."

That concludes the offering on the Darrah deposition, Exhibit OOOO.

• • • • •

832 Mr. Meroni: Now, your Honor, I would like to offer in evidence as Plaintiff's Exhibit IIIII a certified copy of a final judgment comprising 14 pages and an appendix listing patents comprising nine pages in the case of United States of America, plaintiff *versus* Minnesota Mining & Manufacturing Company, Behr-Manning Corporation, The Carborundum Company, Armour & Company, Durex Abrasives Corporation and Durex Corporation, civil action No. 8119, and this judgment is dated July 5, 1959, the opinions involving this judgment appear at 92 Fed. Sup. 947 and 96 Fed. Sup. 356.

(Plaintiff's Exhibit IIIII offered in evidence by Mr. Meroni.)

Mr. Gilliom: If the Court please, the defendant objects to Plaintiff's Exhibit IIIII on the ground that the exhibit is or purports to be a certified copy of a final judgment in a case entitled United States of America, plaintif, *versus* Minnesota Mining & Manufacturing Company, Behr-Manning Corporation, the Carborundum Company, Armour &

Company, Durex Abrasives Corporation and the Durex Corporation, defendants. The objection is on the ground that the defendant in this case was not a party to the proceedings out of which the judgment which constitutes
833 this exhibit was issued, nor was the defendant's predecessor a party to that proceeding and the final judgment in this cause could not be binding upon the defendant or its predecessor in any way and does not tend to prove or disprove any issue in this case.

Mr. Meroni: May I respond to that, your Honor?

The Court: Yes, sir.

Mr. Meroni: If the court please, it is our position that this judgment is directly pertinent to this subject matter and that moreover, while the defendant, Ransburg, was not specifically named, it was in privity with Behr-Manning and moreover, some of the patent rights that Behr-Manning obtained emanated from Ransburg under the Behr-Manning agreement here in controversy.

Now, on page three the Court sets forth nicely the definition of what is involved patent-wise, has some very nice definitions in here; and after defining letters patent and so forth owned or controlled by any of the defendants and all letters patent which may issue on or result from said applications, and so forth, and as relating to any applications for letters patent issued to or filed by any of the defendants relating—Now, these list three categories and they say
834 relating to coated abrasive products and any method, material, equipment or process involved in the production or manufacture of coated abrasive products.

Now, as we shall show, the Behr-Manning Company obtained part of its exclusive rights in this field from Ransburg under some of the Ransburg patents and there is one specific patent, and I will give you the number of that in a minute, that was referred to in the actual correspondence with Behr-Manning that is already in evidence and that is

Patent No. 2,270,341, of January 20, 1942 which relates to a method of coating granular materials and under which Behr-Manning acquired exclusive rights from Ransburg and which rights were automatically included in the terms of this judgment in its broad sweeping language.

Now, proceeding with that judgment, that was a definition of what subject was involved. The Court said: "The provisions of this judgment applicable to any defendant shall apply to such defendant, its successors, subsidiaries, assigns, officers, directors, agents, employees and all other persons acting or claiming to act under, through or for such defendant." And further on the Court lists numerous agreements. It is true it didn't list this particular Behr-Manning agreement that is here in issue but if the
835 Court had been apprised of it no doubt it would have listed it; but its language is so broad it includes it. It says, "Each of the patent licenses and cross-license agreements relating in whole or in part to Coated Abrasive Products or any method, material, equipment or process involved in the production or manufacture of Coated Abrasive Products, to which any of the defendants is presently a party, as licensor"—notice, it says "to which any of the defendants is presently a party"—"including, but without limitation, the following agreements, is hereby terminated and cancelled in its entirety."

Then the Court went on to order these parties to dissolve this illegal relationship and to grant reasonable licenses to the whole industry under all the patent rights that were in this pool of patent rights. Now, under the terms of these agreements, any rights that Behr-Manning had, relating to electrostatic coating of solid particles, whether it acquired it from Ransburg or someone else, was automatically included in this combine and, as I have indicated before, under the terms of the Behr-Manning agreement, Behr-Manning did get all of Ransburg's exclusive rights in at

least this one patent method of coating granular materials which was one of the inducements for Behr-Manning
836 giving Ransburg the exclusive rights in the liquid field and in fact, the correspondence spells that out. It says, "Here we have this patent; you ought to be interested in that." That was one of the sugar-coated pills that was held out to Behr-Manning.

Now, by the same token, in the Behr-Manning agreement we find all these patents listed of Behr-Manning as being patents under which Ransburg got exclusive rights and those are specifically spelled out in this judgment. They are listed in the appendix and I will enumerate them: Schacht No. RE. 20,660; Buckner Patent, 2,027,087; Schacht Patent 2,027,308; Schacht Patent 2,027,309; Schacht Patent 2,082,-182; Schacht Patent 2,245,301; Amstuz Patent No. 2,279,-361; Smyser Patent No. 2,287,837; Carlton Patent No. 2,318,570; Carlton Patent No. 2,318,571 and Oglesby Patent No. 2,328,577.

Now, I would like to offer those patents as a group. There is one more Carlton Patent No. 2,376,342, although not specifically spelled out, issued from an application serial No. 422,065 issuing from original 401,484, which is listed in the judgment.

Now, I would like to offer this group of patents which I have just identified as Plaintiff's Exhibit JJJJJ-1,
837 2, 3—through 12, I think it is. Now, there are patents, your Honor, that are identified in this judgment and they are also identified either the patents or the applications are identified in the Behr-Manning agreement that you have already received in evidence and I offer this group of patents at this time since I have just identified them.

(Plaintiff's Exhibit JJJJJ offered in evidence by Mr. Meroni.)

Mr. Gilliom: If the Court please, there is an objection pending to the offer of Plaintiff's Exhibit IIIII. Does the

Court wish to dispose of that objection before the offer of Plaintiff's Exhibit JJJJJ? I would like to reply briefly to Mr. Meroni's argument on that point.

The Court: I will hear you on I, then.

Mr. Gilliom: Plaintiff argued in substance the defendant in this case was in privity with the Behr-Manning Corporation at the time Behr-Manning Corporation was a party to the proceeding from which plaintiff's Exhibit HHII resulted. I would point—And based upon that supposition a contention as we understand it, that therefore this judgment in that proceeding has some effect upon this
838 defendant although I am not sure what effect plaintiff's Counsel contends it has.

I woud like to deal with that premise. The only agreement between Behr-Manning Corporation or its defendant, or its predecessor which is in evidence in this case, and the only one which exists as a matter of fact, is plaintiff's Exhibit UU and if the Court will recall, that agreement was a completely executed agreement at the time that it was signed and delivered by the parties inasmuch as it at that time conferred one party to the other licenses under certain patents and there remained nothing under that agreement to be executed after the date of its delivery. Therefore the effect of it was after that agreement was executed between Behr-Manning Corporation and defendant's predecessor, Behr-Manning Corporation had some rights under certain patents which were owned by the defendant's predecessor. After it had acquired those rights apparently contemporaneously with that, it entered into some kind of an arrangement with other defendants in the proceedings named in Plaintiff's Exhibit IIIII, which arrangement was condemned apparently in this final judgment; in other words, after it had some property which it had acquired from the defendant's predecessor, it appar-

ently did something wrong with that property, the
839 same way as any person might use property wrongfully that it bought from someone else previously. Now, the judgment in the case of the United States of America *versus* those various defendants could have no effect in this case at all unless it is binding on somebody and specifically since it is offered by the plaintiff in this case, unless it is binding upon this defendant.

And under those circumstances, we submit that it simply can have no binding effect upon the defendant in this case and therefore would not tend to prove or disprove any issue in the cause.

840 Mr. Meroni: It is our position it is binding, Your Honor and that under the terms of this agreement, the Ransburg people were obligated, in so far as their patent was concerned under which Behr-Manning had exclusive rights in the solid particle field is involved. Under Patent 2270341 they should have granted licenses to the trade and have not done so. We say it is a matter for the Court to determine the legal effect of this judgment in the light of the facts as stated.

We don't have to, of course, offer the decisions because the Court can take notice of the decisions but this judgment is not published.

The Court: Was Behr-Manning a party defendant to that?

Mr. Meroni: Yes, your Honor.

The Court: I misunderstood you.

Mr. Meroni: Furthermore, Minnesota Mining is a defendant and in the Behr-Manning correspondence we offered in evidence Minnesota Mining is referred to several times in that correspondence, too.

The Court: What do you say about the argument just presented here that there was some additional infraction

of the law incurred here by Minnesota Mining and
841 these defendants that in no way involved the defendant in this case.

Mr. Meroni: I think it did involve them, Your Honor, under the terms of this judgment. They empowered Behr-Manning to grant rights under this Ransburg patent. This patent is automatically embraced within the scope of this judgment and under the language of this judgment it clearly falls within the definition set forth there even though it is not spelled out. It involves all patent rights that Behr-Manning has relating to the solid particle field, and in the opinions of the Court specifically discusses the electrostatic field and I say that this patent is directly involved in this judgment and that, therefore, Ransburg was in privity with Behr-Manning and this judgment was binding on Ransburg and they should have granted, collaborated with Behr-Manning to fulfill the terms of this judgment, by granting the public licenses under this Ransburg patent on a reasonable royalty basis and they did not do so and, therefore, they likewise are tarred with the same brush.

The Court: I would sustain the objection to the offer of Exhibit IIIII.

* * * * *

851 Mr. Gilliom: The defendant objects to the answer of the witness Roche commencing at the top of Page 345 on the grounds that all of that answer is a volunteered statement by the witness which is not responsive to the question preceding it and states a conclusion of the witness which he was not asked to state in the course of that question, and upon the same grounds the defendant moves to strike all of that answer.

I might elaborate briefly if the Court please, by pointing out—does the Court have the question and answer before him?

The Court: I just authorized the Reporter to take the original deposition out because he is trying to keep up.

Mr. Gilliom: The question appears at the bottom of Page 344, Your Honor, and the answer at the beginning of the top of Page 345. This was a discovery deposition taken by the defendant and the examination is of Mr. Roche who is the president of the plaintiff corporation, and in an effort to know what facts this witness knew to support a conclusion which was alleged in the pleading, the Court will note that the question asks specifically that he stick to the facts and the question is:

852 "What facts, if you have any, are there that you can relate within your knowledge to support your statement that Ransburg insists that the licensees take their equipment? What have you got to support that, that is, facts?"

The answer, evades the question entirely and says:

"Well, actually, sometimes it isn't a question of insisting. It is just a question of what is practical and expedient."

Then the witness goes on to state what his conclusions are upon matters which are necessarily hearsay, so that it appears that the witness did not answer the question to state facts, but simply stated a conclusion and to that extent it is a voluntary statement not responsive to the question which is not admissible.

The Court: What do you say about that, sir?

Mr. Meroni: Your Honor, this was a deposition. Whether it was discovery or factual, we don't kno r.

They endeavor to get a lot of facts, and it seems to me that if they thought there was something wrong formiy about the answer they should have objected at

853 the time so that we would have had an opportunity to clear it up on cross examination. That is the purpose

of depositions, and any objections as to form should be voiced at the time of the deposition.

They made no motion to strike the answer at the time. We assumed they had no objection as to form and that the only objection, if any, they might advance would be relevancy, and moreover, we think the answer is responsive to the type of question that was asked.

The question asked him, "That is just a conclusion you have reached. * * * I want you to stick to the facts. * * *"

And then he stated what he thought his basis was, and I think that the answer was proper, and I think that if there was any grounds for objection they should have voiced them at the time rather than wait until the trial.

The Court: I take it, then, you concede it is objectionable?

Mr. Meroni: I wouldn't concede it is wholly objectionable, Your Honor.

The Court: Let's hear your argument that it is objectionable, other than the technical—

Mr. Meroni: Well, Your Honor, I don't have the decisions at my fingertips, because I didn't anticipate
854 that counsel was going to raise this point, but it is well established that in a corporate entity there is great liberality on this hearsay rule, greater than there is with individuals contracting and doing business. A man that is the head of a corporation, and Mr. Roche was the president, he acquires his information from people in the organization, and everything comes to him in that capacity of president through people in his organization and there are ample decisions that say that that is part of his duties, part of his work, and that is not hearsay, or you never could get any testimony about the activities of a corporation.

Now this man is testifying to things that come to his attention as leader of his corporation. And I say that

there is nothing in here that necessarily says it is hearsay. He might have got it by independent investigations and research that he made. It doesn't say that somebody told him this. He says, "It would appear to me * * *" and he makes statements of that type. It isn't clearly couched in language that would make it objectionable as hearsay anyhow, so I think the whole premise for the objection is bad.

I think it is a proper answer; the head of a corporation would be expected to know the things that he has set forth here as part of his duties in managing that corporation.

855 The Court: I would sustain the objection and the motion to strike the answer out on the grounds of objection here or your counter objection, let's put it that way; that the objection is ill-timed here on the part of the defendant, that you have been taken advantage of; there is no indication that there would be any objection to this answer in question. The Court would afford the plaintiff the opportunity and the time without closing the gates here in this trial for you to bring Mr. Roche here for further cross-examination if you have been deprived of that right.

Mr. Meroni: It is the question of having him come to that expense, he is not in that jurisdiction.

The Court: He is an officer of the litigant?

Mr. Meroni: I think the law is well established, the party can elect to take the deposition of an officer that is outside, or he can make a demand that he appear in Court. They can't have both rights.

The Court: I don't know that that would hold true in the case where the litigant is involved himself, itself in this case.

856 Mr. Meroni: I have had occasion to brief that recently, Your Honor, and the—

The Court: Bad law.

Mr. Meroni: In California.

The Court: I can understand where a party is not a litigant where you would be taken advantage of, but where —what is the title of this man here in the company?

Mr. Meroni: He is president.

The Court: I would afford the president the opportunity to come here and hold the gates open for such time within reason, if he is out of the jurisdiction and out of the country, or even delaying the trial to give you the opportunity of cross-examining him, if you have been taken advantage of by this untimely objection.

But I will sustain the objection at the time being and I will rely on you to tell me before we close the trial here whether you do need time to bring Mr. Roche here.

• • • • •

857 Mr. Meroni: We will now proceed with that same volume, but with the second deposition, namely that of Mr. Baur—before doing that, Your Honor, may I make an offer of proof on that particular question and answer that has been stricken so that the record will show that?

The Court: Well, your deposition will show it. You don't need—

Mr. Meroni: (Interposing.) We are not offering the whole deposition, Your Honor, and rather than to have to take up the whole volume, may we have that particular question and answer typed in the record? Otherwise, we would have to submit the whole volume to the Court of Appeals.

The Court: Whichever way you want to do it, but it is already there. It is in writing. It is just in a written exhibit.

(The referred to question and answer are as follows:)

"Q. That is just a conclusion you have reached, Mr. Roche. I want you to stick to the facts here.

"What facts, if you have any, are there that you can relate within your knowledge to support your statement that Ransburg insists that the licensees take their equipment? What have you got to support that, that is, facts?

858 "A. Well, actually sometimes it isn't a question of insisting. It is just a question of what is practical and expedient. If it appeared to the customer that the only practical and expedient thing for him to do, that he was, you might say, practically forced into buying or into, you might say, leasing the Ransburg equipment or at least using, perhaps I should say, the Ransburg equipment, if that was really the only intelligent choice left open to him, it would appear to me that he was more or less forced into using the Ransburg equipment actually, even though the Ransburg management may not have deliberately insisted that he use it."

* * * * *

965 MR. HAROLD RANSBURG, a witness called by defendant in rebuttal, being first duly sworn, testified as follows:

Direct Examination by Mr. Gilliom.

Q. Will you please state your name?
A. Harold Ransburg.
Q. Where do you live, Mr. Ransburg?
A. The postal address?
Q. Yes?
A. Rural Route 17, Box 530, Indianapolis.
Q. What is your age?
A. Forty-eight.
Q. What is your occupation?
A. I always call myself a manufacturer.

Q. What position do you hold with the defendant in this case?

A. Vice President.

966 Q. And will you state who your father is?

A. Harper J. Ransburg.

Q. And who are your brothers?

A. Ed Ransburg and Gregg Ransburg.

Q. When you refer to Ed Ransburg, is that Edwin M. Ransburg?

A. Right.

Q. How long have you been a Vice President of the defendant?

A. Since 1948.

Q. That is the date on which it was organized?

A. Yes.

Q. And were you a member of the partnership, Harper J. Ransburg Company, which preceded the defendant corporation in the conduct of the business which is involved in this case?

A. Yes.

Q. Who were the other partners in that partnership?

A. Harper Ransburg, Gregg Ransburg and Edwin M. Ransburg.

The Court: May I interrupt you to read this entry here which I have?

(Short pause.)

The Court: All right, Mr. Gilliom.

967 Q. (By Mr. Gilliom.) Will you tell us in what year this partnership was formed, Mr. Ransburg?

A. 1941.

Q. What other business was that partnership engaged in, that is, aside from the business of developing and marketing electrostatic spray painting processes?

A. We were in the business of manufacturing and mar-

keting bread boxes, canister sets, and wrought iron flower pot holders, household kitchenware items and gift items.

Q. And prior to the formation of the partnership in 1941 by whom was that business conducted?

A. Harper J. Ransburg Company.

Q. What sort of legal entity was it?

A. Sole proprietorship of my father's.

Q. Were you and your brothers associated with your father in that business at some time prior to the formation of the partnership in 1941?

A. Yes.

• • • • •

975 Q. Licensing people to use the No. 1 Process, did you supply them the compressed air spray guns that were used with it?

976 A. We did only where it was necessary. During the war, we had very slow delivery on those, and we put in a small stock of them to supply urgent needs, if someone was pressed for them, and as soon as deliveries became loosened up, we had them get them directly from one of the standard suppliers.

• • • • •

982 Q. Now, in marketing your electrostatic spray process and particularly your air process, Mr. Ransburg, has the basic method of licensing changed any since the defendant was organized January 1, 1948?

A. I would say basically it has not, no.

Q. And, of course, the various forms of agreements and so forth that you have executed with your licensees are in evidence in this case. You are familiar generally with those forms, are you not?

A. Yes, in general. Now—

Q. Now, how did and how does the defendant go about interesting prospects in its electrostatic painting systems?

A. We do some advertising; we are occasionally invited to give papers or talks before different meetings, asso-
983 ciations. We get what free publicity we can by offering editorial stories to magazines and then we have some field sales engineers who call on prospects in the field trying to interest them in our processes. Do you want me to carry that on through to the consummation?

Q. Just how you get people interested in the first place is what I meant to cover, by that question.

Have you answered that fully?

A. I think so.

* * * * * *

994 Q. Now, what is the policy of the defendant with respect to your process and system performing satisfactorily once a licensee has agreed to enter into one of your agreements with you?

A. Well, there has never been a case where the customer has given us the proper facilities and the proper cooperation, and where we had to admit that we fell down on the job we expected to do, that we haven't given them back their initial fee. In effect we have guaranteed a considerable number of them that they would get satisfaction.

Q. Now, as of the present time if any prospective user asks you to guarantee that your process and system will coat his product satisfactorily, assuming that he uses it in accordance with your recommendation and with the equipment which you furnish, do you give him a guarantee?

A. Yes, to the extent of the fees he has paid us.

Q. And is that guarantee placed in writing if he requests it?

A. Yes.

Q. If he doesn't request it, but your system does not do a satisfactory job on his product, assuming proper use, what is your policy?

A. Well then, I suppose there have been four or
995 five cases of that kind where we have given them back the initial fee.

Q. Even though there was no written guarantee in the contract or otherwise?

A. Yes.

Mr. Gilliom: I will ask the Reporter to mark these two documents for identification as Defendant's Exhibits 22 and 23.

(The Defendant, for purposes of identification, handed the Reporter certain documents for marking which were by said Reporter marked Defendant's Exhibits 22 and 23.)

The Court: We will have a short recess at this time.

(At this time a short recess was taken.)

996 After Recess.

Q. Mr. Ransburg, I will hand you what has been designated Defendant's Exhibit 23 which is a copy of a letter dated November 17th, 1958, from Ransburg—I should say signed by Harry E. Downer to Morrison Steel Products, Incorporated, and I will ask you to refer to the second paragraph of that letter and state whether or not that is a typical provision guaranteeing the performance of an airless electrostatic coating installation embodying the guarantee to which you have testified?

The Court: This is Exhibit 22 instead of 23.

Mr. Gilliom: I beg your pardon. It has been mismarked, Your Honor. Is that marked 22?

The Court: This appears to be marked 22, dated November 17th.

Mr. Hume: It should be 22.

Mr. Gilliom: Will you remark this No. 22.

(The Reporter remarked the exhibit as Exhibit No. 22.)

Mr. Meroni: If Your Honor please, I would like to interpose an objection to this line of examination on

997 this premise: In the course of this law suit the defendant was served with a subpoena duces tecum and was also served with interrogatories and they were obligated to produce all of their agreements and forms, and we have closed our case with the assumption that all such forms have been produced.

None of the agreements that we were furnished in response to the interrogatories in which we agreed and stipulated could be accepted as typical contain this paragraph which is apparently some practice that has been put into effect recently or since the filing of the suit.

Now, Your Honor, as evidence of the practice that was in existence prior to the filing of the suit and of which we were apprised, pursuant to the various processes is this Exhibit MMM-2, a letter dated April 28th, 1953 wherein we find this statement, this is a letter written by Ransburg to Altex Corporation:

"As you well know, the operation of the equipment and the manner in which the equipment is used as well as the type of coating material used etc. is entirely within
998 your control and completely beyond ours. This being the case, there is no reasonable basis on which we could possibly guarantee satisfaction."

Then as late as October 17th, 1956 we have a letter here which has not been identified but it is from the files of the Ransburg Company written to Emery Miller from Miller Brothers, a distributor, "You should be receiving in a few days signed agreements from the subject company together with their purchase order. You will note that they have added amendments to the agreement which was intended to substitute for a guarantee from you that the equipment would do their part satisfactorily. I explained to this that such a guarantee was impossible and that the best we would be able—the best we could do would be to state that the equipment would do the same kind of a job for them as it is doing for American Cabinet Hardware and

others.'" And that was directed to the attention of Mr. Harold Ransburg, and he replied to it on October 29th, 1956. Now that was at the time of the filing of the suit. We have had no knowledge at any time that any agreement that has been brought to our attention contained a guarantee provision such as this and we closed our case without such knowledge.

The Court: What do you say about that, Mr. Gilliom? It appears the letter is dated November 17th, 1958, long after the issues in this case were closed.

Mr. Gilliom: Well, that is correct, Your Honor. I think, however, that the matter of the present practice of the defendant would be relevant, because of the fact that one of the remedies which the cross counterclaim seeks is an injunction against practices which the plaintiff claims are in violation of the anti-trust laws and so forth.

Therefore, the present policy of the defendant would be a relevant fact, certainly with respect to any forward looking relief.

Now with respect—

The Court: I don't have a supplemental answer on your part to the cross counterclaim here bringing any issue up to date here disclosing any change in practice or anything or admission of practice.

Mr. Gilliom: If the Court please, I think that whenever there is a request for injunction that the time as of which the relief is adjudged is at the time of trial, and if there are facts which have been developed since the filing of the pleadings those are always relevant to show what the present practice is, even though there may not have been any allegation to the change and practice.

1000 The objection which counsel makes on the ground that in discovery proceedings there were efforts to obtain all of the agreements, I think is not well founded.

I doubt whether it would be a ground for objection to the

exhibit in any event. But the fact is simply this, that in the discovery proceedings, as I recall, the request was that all forms of agreement be provided and they were, all of the printed forms were provided.

Further, all of the customer files of the defendant were opened to the inspection of the plaintiff as the Court will recall, so that the plaintiff could have inspected any of the files and could have found in that inspection, examples of these letters of which Defendant's Exhibit 22 is one, so that certainly they have been placed at no disadvantage from that standpoint. I just wanted to make that clear.

The Court: What do you say about—

Mr. Meroni: If Your Honor please, we were furnished these some 45 forms, and were advised that they were representative of all the agreements. We asked them to produce all of the defendant's agreement forms relating to electrostatic spray coating articles.

The Court: What date was that?

1001 Mr. Meroni: This is the paper they filed and this was filed with the Court, this is their answer to Interrogatories 1 through 32 signed by Gregg Ransburg and filed somewhere around the 15th of November, 1956.

In answer to Interrogatory 8, they said, "All of Defendant's agreement forms relating to electrostatic spray coating of articles are attached as D-1 through D-45 and such exhibits are self-explanatory."

We acted on that assumption and in good faith, that they were truly representative, and now as recently as a month ago, they have adopted another form with which we are not familiar and on that basis we closed.

The Court: We can amend that, but the question of your objection that this is beyond the date of the issues of this case—

Mr. Meroni: That is right.

The Court: The point you raise, I am concerned about,

and Mr. Gilliom's response that the equitable injunction you have sought remedy here, that this evidence is admissible, that the injunction is based upon the day of trial or the day of judgment, at the close of the evidence rather than the date of the closed pleadings, the issues in the case.

What do you say about that?

1002 Mr. Meroni: Well, it is our position that the injunction is based on the findings of the Court and if the defendant is submitting this as something that purges itself that can be taken into consideration in the judgment, but I say we should have been apprised of it.

The Court: Well, it appears that the interrogatories were answered the 15th and filed the 15th of November, and this letter is dated November 17th.

Mr. Meroni: This is '56, Your Honor, whereas this letter is '58.

The Court: '56?

Mr. Meroni: Yes, these interrogatories were filed in '56.

The Court: Well, they speak the truth then, don't they?

Mr. Meroni: Yes, but we have never been apprised of any changes in the forms, but it seems to me when we offered these, we offered them at the trial and we offered these as being representative of the forms they were considering. They didn't step forward and say that as of November 17th they issued some new forms.

1003 Mr. Gilliom: If the Court please, just so that is amply clear, all of the forms, that is printed forms have been furnished to counsel for plaintiff. Now, of course, in the printed form there are insertions, etc.

This Exhibit No. 22, to which reference is made in the pending question is not a change in the form, in the printed forms. I think, as I recall it that the answers to the interrogatories indicated themselves that there were necessary changes and insertions, etc. in the various agreements. We have never represented those printed forms just as

they are listed there, represented every single agreement that the defendant executed, and certainly the interrogatory was answered correctly, and, as I say, the plaintiff was placed at no disadvantage at all because of the fact they had the right to inspect and this is not a change in forms.

The Court: I am not so concerned about that phase of the plaintiff's objection. I am about the phase of his objection here that this is an instrument of November 17, 1958, and a practice followed long after the commencement of the action in the filing of the amended and supplemental pleadings in the case, and that I am interested in.

Do you concede that you are wrong in your objection
1004 on that?

Mr. Meroni: I don't concede that, Your Honor. I would like to respond to my opponent's comment. We asked for the typed forms, too, and we offered those in evidence, those that we were furnished. I say they were duty-bound, in fairness to the Court, and we are in a Court of equity, and at least when we filed the substitute pleadings, and we say there is this fact to be considered, otherwise how are we going to proceed in an orderly manner?

The Court: I interpreted the request in the interrogatories to be the existing material requested on the date the interrogatory inquired into and not the change in the practice of the company following where they have to keep running in and amending the interrogatory answer to include new ideas and new things they have accomplished. I don't agree with you on that, Mr. Meroni, but your objection on the basis that this is beyond the issue in the case—

Mr. Meroni: (Interposing.) That is my objection.

The Court: That is what I am concerned with, but in your come-back argument here you conceded some to Mr. Gilliom's argument that they can purge themselves.
1005 What did you mean by that?

Mr. Meroni: Well, it is always possible for a party that is in violation of the anti-trust laws to come in and purge itself or attempt to and then say from that time on they have purged themselves.

The Court: What is the purpose of your evidence on this Exhibit No. 22, Mr. Gilliom? Is it that purpose?

Mr. Gilliom: No. I would certainly not say to the Court that our purpose is to establish that we have purged any practice which was unlawful. Our position is that there has never been any practice which was unlawful under the anti-trust laws. In meeting the broad charges which have been leveled at us in the cross counterclaim, we feel that it is relevant to bring before the Court all of the provisions of the license agreements between the defendant and its licensees which might have any bearing upon the nature of that relationship, that whole program having been called into question by the cross counterclaim and this policy of a guarantee is a standard practice of this defendant, as this witness has testified, and we feel it is a fact which is relevant on the general consideration 1006 of the arrangement, the contract, between the defendant and its licensees.

The Court: Well, I thus far have evidence from this witness, and three or four questions and answers to the effect that it has been the practice of the company generally to guarantee the performance of installed equipment to the extent that they would reimburse their customers to the extent of the amount of the down payment.

Mr. Gilliom: Initial fee.

The Court: Initial fee, yes. Maybe I was wrong in assuming from those answers that this has been the practice since the organization of the defendant company here.

Mr. Gilliom: That can be clarified, I think, by further testimony.

The Court: If so, why do you want to offer an exhibit

here of November 17, 1958? Certainly you have instances existing before the joinder of the issues in this case.

Mr. Gilliom: The exhibit is simply offered as typical and not as speaking of any particular time. It was simply an example.

The Court: I will sustain the objection on the 1007 further ground it is cumulative evidence.

Do you want to clarify that which you just suggested here that you would?

Mr. Gilliom: As to how long that policy has been in effect?

The Court: Yes.

Mr. Gilliom: Yes, I will.

Direct Examination by Mr. Gilliom (continued).

Q. Mr. Ransburg, I think that you testified in substance that this guarantee policy that you referred to is or has been the policy of the defendant with respect to licensees who might want a guarantee, and I think you said that even when they did not ask for it at the time the agreement was negotiated, that they in effect received that agreement or that treatment, is that correct?

A. Yes, if we failed to do the job that we considered we should do, and that the customer should have reason to expect in their plant, we have in every case I can think of—and I can think of no case where we didn't refund their initial fees.

Q. Can you state to the Court approximately how long that has been practice of the defendant, if you recall?

1008 A. I know that it has happened ten or twelve years ago. I think the first one was Guth in St. Louis and I believe that was back in 1947 or 1948 or 1949, along in there.

Q. And so far as the management of the corporation is

concerned has there been any change in that policy since that time?

A. I would say not in that policy, no.

Q. Mr. Ransburg, I will hand you what has been identified and received in evidence as Plaintiff's Exhibit MMM-2, a letter to Altex Corporation dated April 28, 1953, signed by Ransburg Electro-Coating Corporation by D. C. Howarth. In that exhibit, reference is made to the matter of a guarantee. Will you examine that exhibit so that I may ask you a question based upon it, please?

A. Yes.

(At this point the witness examined the above referred to exhibit.)

Q. Mr. Ransburg, have you examined Exhibit MMM-2?

A. Yes.

Q. Will you state whether the statement in the fourth paragraph of that letter with respect to guaranteeing satisfaction to Altex Corporation of the installation which they had was at variance with the policy which you have just described?

1009 A. Well, on the surface, it does appear so, but I think that given enough time, I could explain it.

Q. Go ahead and state whatever facts are relevant to that.

A. Well, this business of satisfying a customer is a very nebulous and difficult and complicated thing when it is made completely general. There are many elements of the success of an operation that are well outside of our hands so far as the specific operation, and whether or not the proper ancillary equipment to complement the operation is handled in the correct way. For instance, temperature control on the paint could be a very effective part of giving or not giving the adequate finish or satisfactory finish, and in the case of Altex, as is witnessed by this letter, evidences that they were in arrears on their busi-

ness and had had our engineers up there numerous times unnecessarily for minor maintenance problems that they should have handled themselves. They were the type of customer who was apt to give an unsatisfactory performance out of perfectly good equipment. I think like any other fine tool that can be used to an excellent degree of performance or to a very unsatisfactory degree of performance depending upon its usage and treatment, and in that sense I think Mr. Howarth followed the policy of the company in saying that in their case they could not guarantee satisfaction to them, and I think it is well implied here unless they do their part in operating it efficiently and under our recommended techniques.

1010 Q. In other words, it appears from Exhibit MMM-2 there was some failure at least in the opinion of the defendant upon the part of the licensee to follow the recommendations and procedures which were a necessary condition of your standard guarantee?

A. Right—I would not say it is a condition of the standard guaranty as given at the point of sale such as that example you showed me. The only thing there is they returned the equipment before getting their refund.

• • • • •

1034 Q. Can you state for the Court approximately how many copies of Plaintiff's Exhibit VVVVV-1 and UUUU or any reprintings of the same have been distributed by the defendant to prospective licensees since the year 1953?

A. We have been using something like 10,000 a year.

• • • • •

1037 Q. I will hand you what has been designated as Defendant's Exhibit No. 30 and ask you to state briefly, for purposes of identification, what that is?

1038 A. This is a license agreement with the Hilgren Manufacturing Company between them and the Ransburg Electro-Coating Corp.

Q. And at or about the time the Exhibit No. 30 was dated, which on the second page appears to be July 13, 1954, were you generally familiar with the transaction from which this license and agreement arose?

A. Yes, in a general way.

Q. Will you state just briefly what the facts were which preceded the execution of this license?

A. Well Hilgren had installed Ashdee Unit, and we brought suit and in the settlement, the new agreement was part of the settlement as I recall it.

Q. Now, when you refer to an Ashdee Unit, what type of process was that?

A. Electrostatic air spray process.

Q. When you say you brought suit, what was the general nature of the suit, just to characterize it?

A. I am sure it was for infringements. Ed would know more of the particulars.

Q. Infringement of the patents?

A. Yes.

Q. Owned by whom?

1039 A. Ransburg.

Q. And you say that in the settlement of that patent litigation this license was consummated between the parties?

A. Yes.

* * * * * *

1058 Q. (By Mr. Gilliom.) Will you state what the purpose of the Harper J. Ransburg Company was in negotiating and entering into Plaintiff's Exhibit UU, the agreement with the Behr-Manning Corporation?

Mr. Meroni: Your Honor, I believe that constitutes a varying of that written agreement. The agreement speaks for itself and the correspondence speaks for itself.

Mr. Gilliom: If the Court please—Excuse me—Does the Court wish to hear argument on that?

The Court: No. The objection will be overruled. Do you understand the question, Mr. Ransburg?

The Witness: Yes, I think so.

A. We wanted to remove this roadblock which was almost synonymous to—obstacle which was almost synonymous to Pugh in that they owned a patent which Pugh's issued patent showed it had been disclaimed, one or two claims, and it was that obstacle we wanted to overcome to our own marketing of our process, plus the saving of any hazard of litigation or trouble to our prospective users.

Q. You made reference to one patent with respect to which I think you said a couple of claims were dis-
1059 claimed. Do you remember the name of the patent?

A. Yes, that was the Smyser Patent.

Q. Did your corporation, did your partnership have any other purpose than the one which you have stated in negotiating and entering into the Behr-Manning agreement?

A. No.

• • • • •

1073 *Cross-Examination by Mr. Meroni.*

• • • • •

1077 Q. Now, I believe you said you circulate bulletins of your company having to do with electrostatic coating at the rate of about 10,000 copies a year or some such figure, is that about right?

A. I believe that is correct, yes.

The Court: Are there any industrial displays that are made in conventions around the country here?

The Witness: Yes, we annually go to the Metal
1078 Show which is held usually every third year at Philadelphia, Cleveland and Chicago and there have been other displays we have attended.

The Court: Did you attend those prior to the years of the filing of the suit here?

The Witness: I believe we have continuously attended the annual metal show since about 1948.

The Court: Did you display and dispose of those bulletins at those sessions?

The Witness: Yes, in large quantities.

The Court: Who attends those conventions?

The Witness: Our sales engineers, Bob Stone has always headed it up; John Maxwell sometimes, Emery P. Miller; some other supplemental sales engineers are there.

The Court: Aside from personnel of the defendant here, who attends those conventions?

The Witness: I believe it's something like that. If I recall the figure rightly, the figure that comes to my mind is something like 176,000 engineers and manufacturers representatives from all over the country in the metal working field.

Q. (By Mr. Meroni.) I call your attention to two 1079 bulletins, Plaintiff's Exhibit IIII and EEEE. You recognize these as bulletins of your company, do you not?

A. Yes, I do.

Q. Bulletin EEEE relates to your No. 1 system and to detearing, does it not?

A. Yes.

Q. Whereas this other bulletin, IIII, relates to the No. 2 process, isn't that right?

A. Correct.

Q. Now, in both of these bulletins you have got a separate heading entitled "Equipment." In Bulletin EEEE under the heading "Equipment" you say, "We supply the necessary specially designed electrostatic unit, the air and fluid air pressure controls, electrical controls, electrode systems, appropriate insulators and limit switches. The

customer supplies the other pertinent equipment. Drawings of the proposed unit are supplied as part of our engineering service."

Was that statement in the bulletins you released like Exhibit EEEE?

A. I believe so, yes.

Q. Now, similarly in the bulletin on the No. 2 system, IIII, under the heading, "Equipment" it is stated:

1080 "Ransburg supplies the complete automatic coating unit, consisting of the source of electrostatic potential, electrical controls, insulators, atomizing heads, and coating material handling system. All that the user needs to furnish is the conveyor, work holders, and solvent ventilation means. Drawing of the proposed set-up are included in our Engineering Service."

Was that statement contained in all the bulletins that were released like Plaintiff's Exhibit IIII, as far as you know?

A. I believe it was, yes.

Q. Now, in your current type of bulletin on the No. 2 process, which you previously referred to, Plaintiff's Exhibit UUUU, under the expression "Equipment," you now say: "When desired * * *" —what occasioned that change in that language?

A. You mean for what reason did we change the language?

Q. Yes, for what reason did you insert the words "when desired" before the expression?

A. My personal opinion is it was an excess of zealousness to make sure there was no possibility of mistake on that question of getting the equipment or not getting the equipment.

Q. Do you know any facts other than your opinion?

A. Well, I know that sort of thing was recom-

1081 mended by Ed and our attorneys.

Q. You were advised to make the change, in other words, were you not?

A. I didn't personally make the change, if that is what you mean.

Q. I mean your company was advised by your legal counsel to make the change, was it not?

A. I think they had been in on every writing of the bulletin we ever had.

Q. Let me put it another way: do you know whether your company was advised by legal counsel to make that change?

A. No, specifically I do not.

Q. Who would know in your company?

A. Ed Ransburg.

Q. Now, in this bulletin on the No. 2 system which is the more recent one, identified as Plaintiff's Exhibit UUUU, referring to page seven I notice an installation of the Hamilton Manufacturing Corporation. Is that one of the companies that you supplied equipment to under—as to your No. 2 process?

A. Yes, it is.

Q. Do you know about when you first licensed that company?

A. Well, it would be a guess. It's been several
1082 years ago. I would—I can guess at a date, if you would like for me to.

Q. Well, if you can give us a pretty good guess.

A. I would say it was perhaps in '47.

Q. Now, according—Does that company still have a license?

A. Several of them.

Q. Does it still have this type of equipment that is shown in this picture for coating table tops?

A. Yes, I believe it has.

Q. Now, in connection with the answer to Interroga-

tory 33, the defendants submitted a Schedule E which is now in evidence and which lists the Hamilton Manufacturing Company as being in Columbus, Indiana. That is the one you are referring to?

A. Yes.

Q. And according to this schedule they obtained a D-1 license on November 11, '48. How does that fit in now with your recollection? Does that refresh it?

A. It could have been '48 instead of '47, yes.

Q. And that license was at a—for a No. 1 system?

A. I would think that that would apply to detearing.

Q. Then a license was granted on your D-5 form with —and on April 5, '50. Does that refresh your recol-
1083 lection? If you want, you may look at the schedule.

A. Are these symbols in the right-hand corner identifying the license?

Q. Yes, there is a column or tabulation.

A. That would not mean anything to me.

Q. In the first column, without air, active air, active without air, with air, and then the last column is form of license used and the first column, under the date, is the date of the license. Now, referring only to this entry for the Hamilton Company, will you refresh your recollection from that and see if you can tell us more accurately when that company had a No. 1 license?

A. Well, it looks like December 11, 1948—November 11, 1948.

Q. I show you the form D-1 that has been offered in evidence here and which was adopted January 1, 1948 and ask you if that does not relate to the No. 1 system.

A. I think so.

Q. So that in 1948 you apparently leased and licensed equipment for the No. 1 system to this Hamilton concern, is that correct?

A. I would think so, yes.

Q. Now, was that—now that system was of the
1084 type that used an air gun and electrostatic grid?

A. Yes.

Q. Then at a later date you apparently licensed and leased a No. 2 airless system, since the system that is portrayed in this picture on page seven of UUUU is apparently a No. 2 system?

A. That is correct.

Q. And that is what you call the bell-type system?

A. We call that the triple head system.

Q. Triple head system?

A. Yes.

Q. Just so the Court knows what we are talking about, would you say it is generally of the order represented by this exhibit, 17-A?

A. Yes.

Q. And that system was one where you used centrifugal force and an electrostatic field, is that right?

A. Yes.

Q. In other words, you used both of those mediums to effect spraying?

A. Well, we used the one, the centrifugal force, to feed the paint to the head and the electrostatic force to
1085 effect the spray.

Q. But you would have to use both of them to get the paint out on the object?

A. If the centrifugal force was not present you would have to use some other means to get the paint there, yes.

Q. So the field alone does not effect spray in that type of a device?

A. I guess in a broad sense that is correct.

1086 Q. I have been referring to this bulletin as UUU and I should have said UUUU. You understand it was the bulletin, UUUU, I was referring to, showing on Page 7 the illustration of the Hamilton Installation?

A. Right.

Q. Now, referring again to this air type or No. 1 System, and just so that we are in accord as to what we are talking about, I'd like to show you a chart, Exhibit 7; and ask you if that doesn't generally represent a so-called No. 1 type of system?

A. Yes, it does.

Q. That is a system where you use an electrostatic, energized grid and you use air guns to project the paint into the grid area?

A. Right.

Q. Now, at the time you came out with that system in 19—what year was that?

A. 1944. I might say we came out with it before that but that was the first time we made a commercial installation that stayed in.

Q. Would you consider that that was a new process that resulted in a substantially improved distribution of paint as compared with say the air type systems?

A. When you say "improved distribution" you 1087 mean uniformity of paint film?

Q. Whatever interpretation you want to place on the term, substantially improved distribution of paint. Did it effect a substantially improved distribution of paint over the conventional air gun system?

A. I think it definitely aided the uniformity of paint film thickness.

Q. Would you say that that No. 1 thickness, as compared to the existent air guns or air spraying enabled a deposition of approximately 25 percent more paint in a single pass than was possible with just air guns alone?

A. You mean in a single pass of the conveyor or single pass of the gun?

Q. A single pass of the conveyor, yes.

A. Yes, I would think that it would be capable of that.

Q. Could you effect with the No. 1 System a coating job that would require less touching up than would be true with the conventional air system?

A. When you talk about touching up, it implies that the piece has been already automatically painted and needs some hand reinforcing, is that what you mean?

1088 Q. Yes. You used touch up in your direct examination. I am using it in the same sense.

A. It would depend altogether on your article involved. In cases where the electrostatic field gives an effective wrap-around to the article that might very well do a more complete job than air spray. In cases where there are deep recesses or electrically shielded areas, the straight automatic air spray might in some cases do a more complete job.

Q. Would it be possible with some articles being sprayed by that No. 1 System to dispense with the booth?

A. No.

Q. You still have to have a booth?

A. Yes.

Q. As a matter of fact, in many instances even with your No. 2 airless system, they still use booths to carry away the fumes, don't they?

A. That is the practical way to do it.

Q. In fact many states require they have booths?

A. I don't think any specific requirement has been made in that regard to the No. 2 process.

Q. But from a fire standpoint and a life hazard standpoint, it is better to have a booth?

A. Yes, that is definitely the usual practice.

1089 Q. Now, I believe you said that when you adopted the No. 2 System such as that shown in Exhibit 17A, you had less of a clean-up problem, is that right?

A. Correct.

Q. Well, tell the Court what you mean by a clean-up problem.

A. Well, with the conventional hand manipulated air spray gun very large quantities of paint misses the object and goes onto the conveyor or the floor, or the work holders and in some cases, in large installations into water wash spray booths to be collected, and from getting out into the air and contaminating the neighborhood. All of that must be cleaned and where cleanliness and quality finish is required such as on refrigerators for instance, it is a daily job and a constant and continuous job. We have one installation that comes to my mind where a crew of five men came in at Studebaker every night and spent the full shift cleaning up the two booths they were using with an air type conventional automatic spray and when they converted to our bell type of electrostatic, they only had to clean their booth once a week except for a minor cleaning of the inside of the bells at lunch time and coffee break time.

Q. Referring to that part of the cleaning, it is true 1090 that no matter whether you use an air gun or a bell or a disk, if you let the spray device or emitter stand overnight, you have to clean it, don't you? The paint congeals?

A. In general it is good practice and good housekeeping. It isn't always done. The paint won't congeal, no. Usually it will not congeal.

Q. Don't you in some instances even provide special equipment for dipping the applicator head in a solvent to clean it?

A. Are you talking about the automatic equipment?

Q. Yes.

A. Not to my knowledge.

Q. Well, aren't there devices on the market for dipping the emitter device in a solvent to clean it?

A. Oh, yes, there are solvent cleaning cans for cleaning off spray gun nozzles and things. We have never supplied any such.

Q. In order to show the Court what we mean about cleaning a gun, we have here, and I believe this is the only sample available, Exhibit No. 9. Do you recognize that as an applicator, or do you not?

1091 A. Yes.

Q. Does that present any cleaning problem?

A. That would be a difficult cleaning problem, yes.

Q. Probably be so difficult that it would be almost impossible to use one, wouldn't it?

A. I don't like to use the word "impossible".

Q. You never commercialized a device like that?

A. I have never seen it used commercially, no.

Q. Do you know whether your company has ever sold a device like this Exhibit No. 9?

A. I don't believe we have sold a device like that.

Q. To clean that, you would have to get in there and clean out all of these little holes, wouldn't you?

A. Either that or flush it out with sufficient solvent so you would be certain all the residue would be out of there before you stopped flushing.

* * * * *

1097 Q. Now referring to your No. 2 System of the bell or disk type, I believe that is the type you market, isn't it, the bell or the disk type?

1098 A. Yes.

Q. When did you first market that type, that is, grant a license and a lease?

A. I believe it was 1949.

Q. Now as of that time, that is when you first came onto the market with the No. 2 System, how many licenses would you say you already had outstanding on the No. 1 System, approximately?

A. When you say when we came on the market, I would have to put that date at the middle of 1951 instead of 1949.

Q. Yes. Because in 1949 you were on the market with Kurt Simons, but that was not of a bell or disk type, was it?

A. That is right. And between that period, we had changing models and modified equipment sent out experimentally between '49 and '51, and I would say that we finally put it on the market in '51, so I think if I understand your question right as to putting it on the market, I think we should relate the date to '51.

Q. All right, let's relate it to '51. When you came out on the market with your present type, the No. 2 System after your experimental work was over, let's say in 1951, how many licenses did you have outstanding, roughly, in the No. 1 field?

A. I would guess that we had around 150, 175
1099 units. I think Don Howarth might answer it more accurately.

Q. But there was no doubt that by 1951 you were well established in the electrostatic coating field and market?

A. Yes.

Q. Were you able to take advantage of your establishment in that field, that is the momentum of it in introducing your No. 2 System?

A. Well, I am sure that that did help, just like General Motors, each new model enjoys the benefit of their reputation prior to that model.

Q. You were able to sell a great many of your customers on the No. 1 System, your No. 2 System, weren't you?

A. Yes.

• • • • •

1106 Q. Will you turn over to a letter dated May 20th to Harper J. Ransburg, May 20, 1941, from Behr-

Manning wherein they refer to Mr. McKnight and the Minnesota Mining Company as apparently having an interest in some of these patent applications? What do you know about that?

A. Well, during our negotiations with Behr-Manning there was a considerable amount of sparring and shuffling around. They were, perhaps both of us, were doing a certain amount of whistling in the dark. I suppose. And they were trying to show themselves extra strong in our area and I suppose there was some vice-versa, in the nature of negotiating to get the best sort of an arrangement, each company for the other, looking out for each company's own interest, and after a certain amount of that I recommended that we both disclose our pending patent application to each other so we could ascertain what we each had for each other, if anything; and this was in connection with that. Apparently Mr. Schacht or somebody over there got in touch with Minnesota Mining Company, who had some interest in the Smyser Patent originally and I think then was assigned to Behr-Manning
1107. from the Minnesota Mining Company or some such arrangement, and I don't know whether the Minnesota Mining Company retained some interest in it or what that connection was; but in any event, the reason that they demurred on disclosing their, or, refusing to disclose their patent applications was due to this reference to Mr. McKnight of Minnesota Mining which; as I recall it, rather closed off our negotiations at that time.

Does that fully answer your question?

Q. Well, one phase of it. I will propound another question. In this letter of May 20, 1941, and we are still talking about this Behr-Manning file which is Exhibit—

The Court (Interposing): PPPP.

Q. (Mr. Meroni continuing.) • • • PPPP, it says referring—it gives a quotation of Mr. McKnight. "I have

a very strong feeling that it is unwise to disclose these pending applications, particularly where there may be a conflict of interest and my natural inclination in this matter is that it would be a mistake to make these disclosures."

Is that what you are talking about in regard to these applications?

A. Yes. You see, while the Smyser Patent had 1108 taken a claim or two away from Pugh, as I showed on the face of the Pugh issued patent there was no way of knowing what the reissue might issue with. It was back again on the pending basis and, of course, since it took a claim or two away from Pugh, that seemed to be pertinent to our activity and our field that we were interested in. We were very interested in seeing what else Smyser might have that might be of interest to us on our redevelopment work. But they refused to go along with that thinking.

Q. Well, you didn't consummate any deal for the purchase of the Pugh Patent as of May 20, 1941. As a matter of fact, you didn't buy that patent until a much later date, isn't that a fact?

A. Yes, that is true. I think it was 1943 sometime.

Q. So that you weren't concerned with the Pugh Patent at that time because you had not acquired it, had you?

A. We were concerned with it, although I think the negotiations drug out for some time, didn't it, Mr. Meroni, on the Pugh Patent?

Q. Yes. It ran for a considerable time beginning with April 1, apparently, and this last page SSSS, is June 23, '43. But it does not appear as of May 20, 1941 you 1109 had acquired the Pugh Patent.

A. No, we had not, that is correct.

Q. Now, in this same letter of May 20th referring to that quotation, it says: "This quotation refers, as I have previously explained, particularly to the Symser reissue application and to one or two other pending electrostatic applications which Minnesota Mining Company is solely prosecuting but over which Behr-Manning will eventually exercise control due to the acquisition by assignment."

Do you know of your own knowledge that the Smyser reissue application that was referred to was the one that ultimately reissued in the Smyser Reissue Patent RE-22419 which I showed you a little while ago?

A. I am confident the one you showed me is the one in question, yes.

Q. And that reissue came out as of January 11, 1944, isn't that right, sir?

A. That is my recollection, yes.

Q. Now, did they tell you at any time that they had a deal or some sort of a contract with Minnesota Mining Company?

A. We knew there was some connection there but we didn't delve into it, what the connections were.

Q. Just what did they tell you and when?

1110 A. Well, of course, this letter probably is more revealing on that question than anything I can recall, but we did know that the Symser Patent, I believe on its face, on its original issuance was assigned to Minnesota Mining but that it was then procured, or rights under it was procured by Behr-Manning somehow or other; I don't know how.

Q. Did they tell you they were in joint venture with Minnesota Mining in the solid particle electrostatic field, or words to that effect?

A. They may have; I don't recall.

Q. You would not say they hadn't told you that?

A. I would not say either way, Mr. Meroni. All of our dealings were directly with Behr-Manning and our only interests were the rights they could give us.

Q. Now, the next paper, there is a letter dated July 3, 1944. By that time you had acquired the Pugh Patent. Is that in accord with your recollection?

A. Yes.

Q. So that this hiatus in this, in these negotiations with Behr-Manning were more or less held in abeyance pending your consummation of the deal on the Pugh Patent, were they not?

A. Does "hiatus" mean stalemate?

1111 Q. No. I mean the interval of time there, the gap between May 20, 1941 and July 3, 1944; it was in that interval of time you acquired the Pugh Patent?

A. We did acquire it during that interval of time, yes.

Q. Did you hold up the negotiations between May 20, 1941 and July 31, 1944 because you were trying to get the Pugh Patent first?

A. No. As a matter of fact, as I said before, I thought that the sensible and fair way to proceed in these negotiations was for us both to show each other what patents we had pending. They claimed to have patents that would worry us in our field and we felt we had some that might read on some of their work in their field; but they were pending and I proposed we show each other those pending applications, which they refused to do by this last letter we discussed.

Q. They didn't want to put their cards on the table but wanted to play poker?

A. Well, I guess so. There was some mixed feelings on our part as to whether we should or not, but we did proffer that as a solution as to our getting together on some arrangement, if we could understand what they had

and they understand what we had, we would have more of a basis for negotiating.

1112 Q. I didn't mean to interrupt you, so if I interrupted anything you were going to say, go ahead and say it, in response to the last question.

The Court: Do you want to read the question and answer thus far?

Mr. Meroni: I am sorry I interrupted him.

(The preceding question and answer was read by the Reporter.)

The Witness: I have it straight.

The Court: The witness has indicated he has it straight. Now show the answer continuing.

A. (Continuing.) The other thing I would like to supply in answer to that question, what we really were waiting for during that length of time was the Smyser reissue. We expected our attorney at that time, and in fact he told us he would watch for it because we were very anxious to see what it had in it when it issued. It turned out that I believe, in a subsequent letter to my letter to Mr. Schacht on July 3rd, 1944, I think in probably a letter responding to that my guess is they told us that the Smyser

1113 patent had issued. Right after that time, after I first wrote Mr. Schacht we found out it had reissued and we cabled Mr. Lockwood when he was out of town on a holiday, and I believe there is a telegram responding to that.

Q. The issue date of that Smyser reissue is January 11, 1944, if that is any help, and if there are any letters that bear on that that you want to call attention to or telegrams, do so.

A. I am sorry. They wired us on July 22nd and asked for a meeting in Chicago in response to my letter and it was at this meeting that they told us the Smyser patent

had issued. We got a copy of it and sent it to Lockwood on his holiday.

Q. Then actually when you picked up the thread, so to speak, in this negotiation with Behr-Manning, by writing this letter of July 3rd, after a lapse in the correspondence, you had acquired by that time knowledge of the fact that the Smyser patent had issued on January 11?

A. No, we acquired that knowledge at our next meeting, right after July 22nd.

The Court: What year?

The Witness: 1944.

1114 Q. Then your attorneys, or someone else had not appraised you of the issuance of the Smyser reissue on January 11th?

A. That is correct. Behr-Manning appraised us of that.

Q. So you feel that when this letter of July 3rd, 1944, was written, you did not as yet have knowledge of the fact that the Smyser patent had issued?

A. That is right.

Q. Referring again to that letter of July 3rd, 1944, and we are still talking about PPPP, you say "Our work has progressed considerably and we are now preparing to launch an increasingly aggressive operation in the application of various coating materials to manufactured articles in the industrial finishing field. You may or may not have heard that some of the preliminary installations we have made have proven highly successful and are attracting some worthwhile attention." Were you referring to some No. 1 installations?

A. Yes.

Q. Continuing in the letter "I know that you will be interested to learn that our patent picture has been improved by the issuance of five patents to us and the ac-

quisition of the Pugh patent. We have also been
1115 fortunate in effecting some very constructive improvements on which we have applied for additional patents." Did you advance that information to them in the hope that you could renew their interest in your situation?

A. Well, you see when our negotiations bogged down in 1941, we had several patent applications pending and they had several patent applications pending which they either implied or told us might be of some concern to us and we certainly knew of one they had pending that was of serious concern to us and I think that probably the next paragraph explains my personal feelings on the matter better than any other.

Q. Would you read that?

A. It says, and this is my letter of July 3rd to Mr. Schacht, 1944, the next paragraph—"Notwithstanding the wide separation of the fields in which we have been operating, it is easily possible that certain aspects of our patent protection might well overlap, particularly in view of the present Pugh status."

Q. You had no definite knowledge at that time that they would overlap? You were conjecturing that they might?

A. We were apprehensive about it in view of the
1116 fact that on, or at this stage, July 3rd, we had by that time licensed several people with full patent infringement indemnification and every time we licensed them with full patent infringement indemnification, naturally we didn't know what the Smyser reissue was going to come up with.

Q. You go on to say "We mutually can expect every advantage from resuming the discussion to some mutually satisfactory conclusion so that each of us may aggressively pursue our endeavors without concern." There is no question from this statement that you were seriously endea-

voring to reopen the negotiations with Behr-Manning at that time.

A. That is correct.

Q. Now, would you refer in Plaintiff's Exhibit PPPP to the letter dated August 8, 1944. There you send the Behr-Manning Company copies of four patents, do you not?

A. Yes.

Q. Are those patents some of those you had issued that you were referring to, do you recollect?

A. I presume they were.

Q. Now, in the second paragraph you said "We'd like to point out that the claims in our Patent No. 2334648 1117 are of considerably greater significance * * *" and here my copy is faded "* * * than one not well versed in our particular field could possibly appreciate." What did you mean by that?

A. I don't know.

Q. Then you go on to say "Patent No. 2270341 is the one to which we referred as possibly interesting to you in the abrasive or pileius fabric field or at least one in which you could contribute materially in the composition cork industry or the fireproof insulating shingle industry." Do you know anything about that patent?

A. Yes, I do.

Q. Tell us what you know about that patent.

A. Well, I was the inventor of it. It looked like it might have some potentials, but needed some work on it. It was a little outside of the field that we were really interested in. It was coating in a sense but it was coming closer to coating abrasives than articles, which was our main concern.

Q. Well, I hand you this patent, 2270341, identified as KKKK and ask you if that is the patent you are talking about?

1118 A. Yes.

Q. That is KKKKK rather.

A. Yes.

Q. The patent is entitled Method of Coating Granular Materials. I take it from that title that it related to solid particle material, is that right?

A. That is right.

Q. Do you know if that was the only patent you had procured in the solid particle field?

A. I believe that is right.

Q. And you were willing to give the exclusive rights under that patent in the solid particle field to the Behr-Manning Company in exchange for liquid coating rights from them?

A. This wasn't in the abrasive field. It was designed for applying an adhesive to composition cork and we thought that it might be applicable as well to shingles, etc., but it was primarily directed at making a material that was comprised of small fragments of cork that were coated electrostatically with an adhesive and then comprised in different shapes for composition cork.

1119 Q. Did you or did you not give the exclusive rights in the solid particle field under this Patent 2270341, to Behr-Manning Corporation?

A. I don't think solid particle field is the terminology used in the agreement. I think it says something about pileius and fibrous abrasives and fibrous shaped particles or something like that. It wasn't as broad as solid particles, as I recall.

Q. Well, we will get the agreement here and I will show it to you. I will hand you Plaintiff's Exhibit UU which is an agreement dated September 26, 1944, and ask you if that is the agreement you refer to?

A. Yes, I am sure it is.

Q. Does it refresh your recollection as to what language

was used in that regard and if so state wherein it is refreshed?

A. It says "Such exclusive license shall apply and be limited to

"(a) Abrasive articles of every kind involving the electrostatic propulsion, dispersion, orientation, deposition, or classification of solid and/or liquid particles;

1120 "(b) Flock coated articles or articles coated with fiber-shaped particles of material of every kind involving the electrostatic propulsion, dispersion, orientation, deposition, or classification of liquid particles and/or solid fiber-shaped particles and/or comminuted fiber-shaped particles; and

"(c) For the separation, grading, or classification of abrasives or fiber-shaped particles of material used in connection with the fields described in (a) and (b) above, according to kind, size, and/or weight."

Q. There is no doubt in your mind but what that would embrace granular materials, is there?

in the liquid coating field for yourself and give the solid materials, which is too broad for me to accept.

Q. Well, roughly speaking, didn't you retain any rights in the liquid coating field for yourself and give the solid particle rights to Ransburg? Wasn't that the intent of the arrangement?

Mr. Gilliom: The defendant will object to that question on the ground it calls upon the witness to interpret the written instrument which speaks for itself.

1121 Mr. Meroni: I will withdraw the question.

Q. Would you refer now in that agreement, which is before you, Exhibit W to Exhibit A. There is listed in that section under U. S. Patents five patents, is there not, of your company?

A. Yes.

Q. And you granted the exclusive rights in the fiber-

shaped particle field under those patents to the Behr-Manning Company, isn't that right?

A. Yes.

Mr. Gilliom: May I have the answer stricken for the purpose of an objection?

The Court: The answer will go out for the purpose of an objection.

Mr. Gilliom: The defendant objects on the ground it calls upon the witness to place a legal interpretation upon a written instrument which speaks for itself.

Mr. Meroni: I am asking if they executed the agreement and gave the rights to Behr-Manning.

1122 The Court: If there is something ambiguous about this exhibit, the contract there, I would permit some testimony on that, but there has been no objection to this instrument. Has it been stipulated?

Mr. Meroni: I will withdraw the question and present it another way.

Q. (By Mr. Meroni.) There is no question that your company consummated this agreement?

A. No.

Q. There is no question but what the agreement is still in force and effect, referring to this agreement, UU?

A. I think it is, yes.

Q. Now, it appears on the top of the agreement, and from the answers to certain of the interrogatories that it went into effect as of the 26th day of September, 1944. What is your recollection of that?

A. That conforms.

Q. The 26th day of September, 1944?

A. That is about the time I recall.

Q. Well, I was in a little quandary about that from
1123 these papers here because it appears from this file PPPP that after September 26, 1944 there were

further changes and drafts discussed in the correspondence. Do you know anything about that?

A. Well, the details of that were handled by our attorneys under Ed Ransburg's direction and I think he might be more competent to explain that. I don't recall unless we agreed in principle on that date of September 26th, but the attorneys wanted to clean up some language later, or something.

1125 Q. Well, I would like to call your attention to a letter dated November 13, 1944 in this Exhibit PPPP which is written to the Behr-Manning Corporation and more particularly to the second paragraph reading as follows:

"Our greatest concern * * *"

A. (Interposing.) November 13th?

Q. Yes, 1944. Do you have it before you, sir?

A. Yes.

Q. Second paragraph, "Our greatest concern and that to which we have given the most thought and consideration was the question of just how to word our future license agreements so that there could be no question in the minds of our users that they were restricted from operating in your fields and still not operate—and still not create undue sales resistance for ourselves. It was originally our thought that would best be accomplished by adding to our license agreements, 'said right does not include the use of this process in the manufacture of abrasive articles or articles coated with particles of fibrous material of every kind.'"

Do you know anything about that?

A. Yes, we did include such wording or some similar wording as this in our printed formal agreement.

Q. Did you participate in any way in the drafting
1126 of this letter of November 13, 1944?

A. I think I probably did.

Q. Is it correct to say that as highlighted in Paragraph 2 that the point they make there was your greatest concern?

A. I don't believe I would have personally used that language. It seems undue emphasis on the matter of wording of a rather simple thing to me, I don't know.

Q. Who wrote the letter?

A. My father.

Q. Well, did he consult with his sons when he wrote it?

A. I imagine he surely did and probably, no doubt, with our attorney to some extent.

Q. Well, you were acting in this transaction by and with advice of counsel, were you not?

A. Yes.

Q. Now I call your attention to the letter of November 24, 1944 from Behr-Manning to your company. Would you turn to that, sir, on Exhibit PPPP? Do you have it?

A. Yes.

Q. Now that letter is dated November 24th and it says: "Enclosed you will find three copies of electro-coating agreement which has been signed by Behr-Manning in the form in which the agreement was re-drafted as 1127 outlined in your letter of November 13th."

Do you have any way for accounting for the fact that the agreement was still dated as of the 26th day of September of 1944 even though it was being sent back to you signed on November 24?

A. Well, I presume that we agreed to that date as the official date of our agreement and then had some tidying up of words to do here with our attorneys afterwards.

Q. Well, now, refer to the third paragraph of that letter, he says:

"If this is the case, and since no licenses have, to your knowledge, been granted in the flock or abrasive fields, we do not foresee difficulty or conflict with any of your existing licensees and it should not be difficult for you to

so limit your future licenses as to prohibit the employment of the patents under which you have given us exclusive rights for abrasive and flock coated articles in these fields."

I presume the patents he is talking about are the ones that are identified in Exhibit A as the ones you previously referred to in Exhibit UU, is that correct?

A. I don't think this is referring to patents, I think it is referring to licensees, employment of patent.

1128 Q. It says "prohibit the employment of patents under which you have given us exclusive rights."

A. Yes, I imagine that is true.

Q. Now do you still have before you Exhibit UU which is the agreement, or have I?

A. No, I have it.

Q. Referring again to Exhibit A, I would assume that the list—

A. Which is Exhibit A?

The Court: That is in the agreement.

Q. That is the Exhibit UU, sir. I will wait until you have it. Exhibit A is at the end of it.

A. Oh, yes.

Q. Do you have it before you, sir? There are nine applications listed there. Do you know if those were all the applications you had pending at that time?

A. I think they were all at the time of the agreement.

Q. In Exhibit B, there is listed the patents of Behr-Manning under which you obtained certain exclusive rights, and there is also listed applications. Did your company grant licenses under some of those patents as far as you know?

A. To the extent that they applied to our license, I expect so, yes.

Q. Well, did you ever determine definitely that

1129 any of them did apply?

A. I personally didn't, no.

Q. Well, did you ever receive any advice from your attorneys that any of them did apply?

A. We felt that the Smyser reissue patent did apply, yes.

Q. Was that the only one?

A. I wouldn't be sure of that.

Incidentally, in reading this last letter, Mr. Meroni, if I may expound on that, I think it refreshes my memory to the point, one point of considerable concern was the fact that we had put out several agreements that had no limitations at all prior to the Behr-Manning agreement and it was of some concern to us as to whether or not, and actually I think Dad felt the concern was more than I did, with the technical matter of principle with him, that we had officially given out, let's say, ten or fifteen or perhaps twenty licenses without any limitation on it as far as this flock coating and fiber shape particles were concerned, so we had in effect, technically given them an agreement that we had already put ourselves in the position that we technically couldn't perform 100 per cent. And I think that is what is meant by our greatest concern.

Q. Well, whatever it was, you rectified it, didn't you?

1130 A. Yes, we satisfied them by giving them a list of all of our outstanding licenses and then they were satisfied to accept them.

Q. Have you ever received any complaint from Behr-Manning that you have—that you had not performed under the agreement?

A. No.

Q. Have you ever in turn complained to Behr-Manning that it has not performed under the agreement?

A. No.

The Court: Have any of your licensees ever complained that they were shut off from the abrasive field?

The Witness: No, they have not.

Q. Now I hand you a printed agreement—or pardon me, a typewritten agreement, No. 3448, which is identified as ZZ-1 and ask you if you included it in this agreement, if you included in this agreement this provision in order to comply with the agreement with Behr-Manning Corporation, referring to Article 1, the last line says, last three lines, "But said rights shall not include the use of said process in the manufacture of abrasive articles, flock coated articles or articles coated with fiber shaped particles."

A. Yes, that was in order to comply with the Behr-
1131 Manning agreement.

Q. Does that particular license relate to a No. 2 System or not?

A. Is this Ransburg atom spray process? Is this our form that was typed up?

Q. It purports to be an agreement between your company and the Enamel Steel and Sign Company, isn't it?

A. Yes, that is probably before we had any printed form and this was a different contract altogether anyway.

Q. This was a special deal, wasn't it?

A. Yes.

Q. As I understand it at that time you didn't have in existence the centrifugal bell or centrifugal disk type applicators, is that correct?

A. We didn't have the bell or disk type applicators in March of '49.

Q. Now I call your attention to an agreement here, Exhibit ZZ-2, which purports—well, that is the one you just saw.

I will show you ZZ-3 which is another one with the Enamel Steel and Sign Company and it contains this provision, "But said rights shall not include the rights of

said process in the coating of any articles which Ransburg may designate at any time during the period of this
1132 agreement." What was meant by that, do you know, referring to Paragraph 1?

Mr. Gilliom: If the Court please, I believe the defendant will object to the question on the ground it calls for the witness to make a legal interpretation of the written instrument that speaks for itself.

Mr. Meroni: I am asking what he meant by the technical language. I think we are entitled to explain that.

The Court: The objection will be overruled. You may answer.

A. Mr. Meroni, I think I would rather you would ask Ed Ransburg about this than I. It was written by him and signed by him and negotiated by him and I really don't know what was intended by that paragraph.

Q. All right, sir. I hand you what purports to be another agreement with the Pittsburgh Corning Corporation, Serial 5860 entitled Exhibit ZZ-4 in the first paragraph I note this limitation, "But said license shall not include the right to use said process in the manufacture of abrasive articles, flock coated articles or articles coated with fiber shaped particles." Was that provision put in that in order to comply with the Behr-Manning agreement?

1133 A. It would have to be, yes.

I would like to see it again, if I may.

Q. Yes, sir.

A. This certainly appears to be a No. 2 process experimental unit, which I believe is outside of the Behr-Manning agreement. I don't think the No. 2 process was involved in the Behr-Manning agreement—it is my recollection.

Q. Well, you have the limitation in that agreement, do you not, that you were incorporating in these agreements pursuant to your arrangement with Behr-Manning, isn't that true?

Mr. Gilliom: Excuse me, may I have the question read, please?

(The preceding question was read by the Reporter.)

Mr. Gilliom: May I ask a preliminary question at this time, preliminary to an objection?

The Court: No, the exhibit is already in evidence. It isn't any question of admissibility. If it pertains to cross examination, we can wait until we get in it. But you may state your objection, if you wish.

Mr. Gilliom: I have no objection to the question. My purpose was to ask the question of whether or not he had personal knowledge.

The Court: You can straighten that out on cross examination, otherwise we will just be interrupting time and time again.

1134 Q. Mr. Ransburg, if it might straighten you out on this point, I have another one here which is definitely on the No. 2, Exhibit ZZ-7, and which likewise says, "But said rights shall not include the use of said Process in the manufacture of abrasive articles, flock coated articles, or articles coated with fiber-shaped particles." And I am referri to the top of page two. Does that refresh your recollection as to that limitation having been included in your No. 2 license agreement?

A. I know in general it was not. These must have been a few of the—This is dated 1955, isn't it? I frankly can't explain that. In the printed form it is not.

Q. Do you admit that the ZZ-7 is clearly for the No. 2 system?

A. Well, there is nothing on the face of it to make it obvious. By checking this drawing number it could be ascertained.

Q. Doesn't it right on the face of it say "electrostatically atomized"?

A. Not that I see. It has—

Q. (Interposing.) I call your attention to the second paragraph, where it says, "and covering methods and apparatus used in coating articles with electrostat-
1135 ically atomized and electrostatically deposited coating material"—Doesn't that spell it out?

A. The second paragraph I have not found it, I find "electrostatically depositing of materials."

Q. May I assist you, sir?

A. Yes.

Q. You are looking at the Pittsburgh agreement and I was referring to ZZ-7. You are looking at ZZ-4.

A. Oh.

Q. Now, on ZZ-7, I call your attention to the second paragraph where it says the apparatus of coating materials were electrostatically atomized and electrostatically deposited. Is there any question about it being the No. 2 agreement?

A. No. That would be the No. 2 agreement.

Q. There is no question about that agreement including this restriction on the top of page two: "But said rights shall not include the use of said process in the manufacture of abrasive articles, flock coated articles or articles coated with fiber-shaped particles." That is the same limitation you were putting in these agreements pursuant to your agreement with Behr-Manning, isn't it?

A. I don't believe it was in pursuant to the agreement with Behr-Manning. I think some of our over-
1136 zelous attorneys kept on using every phrase that was in the standard form or certain excerpts copied from our standard form in the specialized agreement for the first experimental No. 2 units that were put out. This was dated June of '49 which would mean that it was one of the very first experimental No. 2 units to be installed. It was put out on a confidential and experimental basis.

Q. But it is there?

A. Yes, it is here.

Q. The agreement went into effect. You don't quibble about that?

A. No.

Q. Now, you later started printing your agreements, isn't that true?

A. Well, we had printed them long before that, as our agreements became standard forms.

Q. Well, starting with your form D-1 and going up through, say for example up through D-20-A that you furnished in this cause, you used a, regularly in these printed agreements, this expression or one substantially like it: "But said rights shall not include the use of said Process in the manufacture of abrasive articles, flock-coated articles, or other articles coated with fiber-shaped par-
1137 ticles." And if you want to examine D-1 to D-20-A you are free to do so. You can identify them as you want to as you go along.

The Court: That seems to be quite a package, gentlemen, and we have had Counsel on his feet for an hour and one half and the witness in the witness chair. Suppose we just recess.

Mr. Meroni: Thank you.

(At this time there was a short recess.)

1138 After Recess.

Mr. Meroni: By agreement with counsel, I will withdraw that previous question because I believe the printed documents will be self-explanatory in that respect, Your Honor, and save time.

Cross-Examination by Mr. Meroni (continued).

Q. I hand you what purports to be some notes identified herein as Plaintiff's Exhibit HH and which has been offered in evidence. I will ask you if you can identify those notes?

A. Yes, I can.

Q. Are those your notes?

A. Yes.

Q. It is entitled "General Electric Company Refrigerator Presentation Notes" and I believe there is a date in the upper right-hand corner of January 2, 1954, is that right?

A. Right.

Q. Those notes that you made in connection with a speech and a film that you gave to a meeting?

A. It wasn't a speech. It was a conference around the table, yes.

Q. Who were present at the conference?

A. There was Jim Juvinall, Robert Juvinall, Don
1139 Howarth and I believe John Maxwell and myself from our company.

Q. Your sales people?

A. My sales and development engineer.

Q. Did you have a secretary take down the notes?

A. These notes were given in preparation for that meeting. They were made up to get my thoughts together for the meeting.

Q. Did you dictate them?

A. Yes.

Q. Did your dictation for that meeting include this statement: "We submit to you, therefore, that in most of the industry those who have been through this confusing mill don't take these things too seriously, and that most people realize that there is a very considerable probability of error in this field"? Did you dictate that?

A. Yes. I would like to add "this field" means the refrigerator industry in particular.

Q. And you were referring there to the matter of efficiency, were you not?

A. Yes.

Q. What was the purpose of that meeting with these people of your organization?

A. The purpose of the meeting was to stimulate their interest in the No. 2 process.

1140 Q. Were you sort of giving them a sales pitch?

A. I guess you might call it that, yes.

Q. Now, I hand you a group of papers which have been identified and offered in evidence herein as Plaintiff's Exhibit RRRR which purport to relate to negotiations with the Brush Development Company. Did you participate in those negotiations at all?

A. Yes, I did.

Q. And was that in connection with the Gravley patent on detearing?

A. Yes.

Q. I call your attention to a copy of Gravley patent No. 2359476 which appears in Plaintiff's Exhibit GGGGG, and ask you if that is the Gravely patent you finally acquired from Brush Development Company?

A. Yes, I believe it was.

Q. Now, as I understand from this group of papers here, which I have handed to you in connection with the negotiations, namely, Exhibit RRRR, you did not immediately

acquire that patent but first entered into an agreement with the Brush people? Do you remember that?

A. My understanding is that initially we got exclusive or nonexclusive rights in the paint field.

1141 Q. Well, can you turn over in the group of papers to the agreement entitled "Memorandum Agreement" and that follows the letter of September 22, 1942. Is that the agreement you are talking about?

A. It says September 19th, I believe.

Q. This agreement seems to be dated, I think the 17th, isn't it, of September, 1942, or is that the 19th? It looks like the 17th on my copy.

A. There is a letter here to Mr. Lockwood on September 18th, and a letter from him of September 19th, and then the Memorandum Agreement.

Q. And the agreement is dated September 17th, is it?

A. That is correct.

Q. Is that the agreement you are talking about?

A. Yes.

Q. And there we find identified the Gravley subject matter which was then pending in the Patent Office its application, Serial No. 313914 that corresponds to the application of this Gravely patent, 359476 which I called your attention to a moment ago?

A. Yes, it surely does.

Q. And the patent issued on that apparently on October 3, 1944, which is after the date of your agreement?

1142 A. That is right.

Q. Now, under the terms of this agreement, more particularly Paragraphs 2-A and 2-B, the parties had certain particular license rights, is that what you were referring to when you said awhile ago you had some license or something?

A. Yes.

Q. And then under Paragraph 4 we find this provision:

"Both parties agree that they will not until the final determination of said interference"—

A. (Interposing:) Something seems to be missing. 4 seems to be missing in mine. It skips from Paragraph 2 to Paragraph 6.

The Court: Just turn over a page. Maybe it is out of place there.

The Witness: Yes, here is 4.

Q. It is out of place, is it?

A. There is a duplication in here, I believe.

Q. You find Paragraph 4 and the one I am referring to?

A. Pages 1 and 2 are in here twice.

Q. Both parties agree that they will not until the final determination of said interference grant any license, any license to others under their said respective applications to manufacture or sell the apparatus covered by said 1143 applications without first obtaining the approval in writing of the other party. Did you live up to that obligation? I mean by "you" the Ransburg Company.

A. How long is this agreement in effect, do you know, Mr. Meroni?

Q. You apparently acquired the patent some time in May of 1943. It was the assignment at the back of these papers, the last two pages.

A. Well, I feel confident that we did live up to that although we must have gotten their approval on several licenses that we issued between September 17 and you say April of 1943?

Q. No. The assignment doesn't show the date of execution but appears to be May of 1943.

A. I would be confident that we did live up to this but it would seem to me we must have gotten their permission for several licenses in the interim time between September 17th and May of 1943.

Q. Do you know whether you got the permission or not, or don't you recall?

A. I don't know of my own knowledge, but I would assume that we did.

Q. Let's see if we can explain to the Court here what was involved. As I understand it, the Brush Com-
1144 pany had a patent application Serial No. 313914 filed January 15th of 1940 involved in a patent office interference with your application, Harold P. Ransburg, Serial 3—and it looks like 66 or 86—529, filed November 22, 1940. Do you recall that you were in the interference?

A. Yes.

Q. That was a conflict in the Patent Office between your application and Mr. Gravley's in which the issue was who was prior in point of time? You so understood that?

A. Yes.

Q. Do you remember the outcome of that interference?

A. I believe that Gravley issued but I don't believe the interference was finally determined as an interference. I have a vague recollection.

Q. In any event, Gravley got the patent and you eventually bought it, is that right, or did you?

A. I don't believe it was a purchase. I think it was another legal terminology. I don't believe it was a pur-
chase.

1145 Q. Well, the last paper in that file that I gave you there on this matter had an assignment. Does that refresh your recollection at all?

A. Well, are you considering an assignment and a purchase synonomous?

Q. Well, did you acquire an assignment of the patent? Let's put it that way.

A. I believe we did except for shop rights for them.

Q. I beg your pardon?

A. I believe we did acquire an assignment except for shop rights for them, that is my recollection.

Q. I believe that the patent is still in force and effect, isn't it?

A. I—yes.

Q. (Interposing.) We can verify that.

A. It would have to be, because it was '43 that it still wasn't issued—in '43, wasn't it?

Q. That is right. It issued in '44 so it wouldn't expire until '61?

A. Right.

Q. Do you have any way of explaining this situation? You were apparently primarily interested in obtaining rights under a Smyser application or patent from
1146 Behr-Manning, yet in the cross license there is listed a great many patents of Behr-Manning. How did it happen that you got rights under all of the others?

A. I think in both cases we didn't try to determine each and every one of those patents and their possible eventual effect in the field of electrostatic painting, and I think that they had the same attitude regarding our patents and applications. We both wanted a free hand to proceed in our different fields without any thread of infringement from somebody in some other field to us or our customers, and I believe the attitude was more or less that we were happy for them to include all of their patents and applications and we were happy to include all of our patents and applications because neither of us had any interest in the other's field.

Q. Would you say that it would be accurate to state that in the case of better than three-quarters of the patents under which you obtained certain exclusive rights from Behr-Manning you never did grant any rights to anyone else in the trade?

A. I would think that would probably be true. I don't

know. I don't know all the patents that we gained rights from on there. I don't think we ever examined them.

1147 Q. You didn't care?

A. I didn't care.

Q. But it is a fact that even to this day, Behr-Manning has not, as far as you know, entered the field of liquid particle electrostatic spray coating?

A. That is right.

Q. And even as of this date, your company has not entered into the field of fibrous or solid particle coating, let's say?

A. That is right.

Q. As distinguished from liquid particle, is that right?

A. Yes.

Now, I think they may use electrostatic application in the coating of some of their adhesives.

Q. But that is adhesive particles, isn't it?

A. No, adhesive liquids, liquid adhesives for the abrasive particles to adhere to.

Q. It is not a coating though?

A. Yes, it would be a coating, but it is not a coating in the sense of painting an object.

Q. Did you ever have any patents on that subject?

A. In the way of applying liquids, liquid adhesives?

Q. Yes.

1148 A. Oh, yes, and that I think is what they were mainly interested in.

Q. And you gave them the rights under those?

A. Yes.

Q. To the exclusion of all others?

A. Yes.

Q. Now you understand, I believe it was in December of 1956, that your company filed a counterclaim in this cause, you understand that to be a fact?

A. I know that there were some counterclaims filed, yes.

Q. Do you recall just prior to that litigation the start of that counterclaim, namely along about October that you had some correspondence relative to the Ajax Hardware Manufacturing Corporation?

A. I remember that name. Is that on the West Coast?

Q. Los Angeles, yes.

A. Yes.

Mr. Meroni: I have two papers that I would like to have the Court Reporter mark for purposes of identification:

One of them is dated October 17th, 1956 and the other is dated October 29th, 1956, as Plaintiff's Exhibits XXXXX and YYYYY.

1149 (The plaintiff, for purposes of identification, handed the Reporter certain documents for marking, and which were by said Reporter marked Plaintiff's Exhibit XXXXX and Exhibit YYYYY.)

Q. (By Mr. Meroni.) You recall testifying in response to some queries by Mr. Hume or rather Mr. Gilliom as to the matter of guaranteeing satisfaction?

A. Yes.

Q. I hand you these two papers that have just been identified as XXXXX and YYYYY and ask you if you can identify them, these being copies furnished to us by your counsel?

A. Yes, this is a letter from Herm Miller to Dr. Emery Miller on October 17th, 1956, regarding Ajax Hardware and makes reference to a stipulation they put on the bottom of the agreement relating to a guarantee of satisfaction which Herm Miller explained that he understood we could not accept.

Q. Was that letter referred to you for answering?

A. No, I believe not.

Q. Did you answer it?

A. Yes, I see my name on the bottom of it; I didn't realize I had, but I was familiar with it.

Q. And you agreed with him?

A. No, this other letter stipulates what the word-
1150 ing of the guarantee was that we would give them, which in effect says that we will give them the same quality of finish achieved at American Cabinet Hardware, but wouldn't give them a blanket guarantee of satisfaction without any qualifications.

Q. So that as of that date, you were not giving any of your licensees a blanket guarantee of satisfaction without any qualifications?

A. We had done—

Q. What is that?

A. We had done—it wasn't a standard procedure for us to do it with every agreement, no.

Q. In the majority of agreements you did not do it, isn't that a fact?

A. That is true.

The Court: Are you offering these?

Mr. Meroni: Yes, I offer those two documents in evidence on behalf of the party plaintiffs as XXXXX and YYYYY.

(Plaintiff's Exhibit No. XXXXX and Exhibit No. YYYYY was offered in evidence by Mr. Meroni.)

1151 Mr. Gilliom: No objection.

The Court: XXXXX and YYYYY are admitted and read into evidence.

(PLAINTIFF'S EXHIBIT NOS. XXXXX and YYYYY were admitted and read into the evidence, and made a part of the record in this case, said exhibits being in the words and figures following, to-wit:)

(Here Insert.)

1152 Q. (By Mr. Meroni.) Now you testified in considerable length about the licensing and leasing of No. 2 Units and I believe you agreed this morning that you had never licensed or leased any units with applicator heads in this, in Exhibit 9, do you recall that?

A. Yes.

Q. Now have any of the No. 2 leases or licenses that you were testifying about in response to queries by counsel embodied applicators like Exhibit CCCC or Exhibit DDDD?

A. I believe not.

Q. Is it accurate to state that with the exception of the installation at the Enamel Sign Company in Chicago that all of the installations that you have made of the No. 2 Processes involved either a rotating bell or a disk?

A. Yes, I believe that is correct.

Q. Now I understood from your testimony on direct examination that it was always your policy to hold yourself available to grant licenses without furnishing equipment, is that understanding correct? Is that what you meant to say?

A. Yes.

Q. Why then was it necessary in 1953 for your company to go to the expense and trouble of circularizing the
1153 entire trade with form letters as to the availability of a license without equipment?

A. I don't believe it was necessary.

Q. Why did you do it? Was it on advice of counsel?

A. Yes.

At least, I didn't hear the advice of counsel, but it was on the urgence of Ed.

The Court: By "Ed" you mean your brother?

The Witness: Edwin Ransburg, yes.

Q. Also, why was it necessary to issue special bulletins to your distributors in 1953 telling them that if any customer wanted a license alone that the customer could have

it if it returned the equipment, if it was known that licenses alone were available?

A. Well, I think in that case—I think in that case there was some necessity for keeping that thought before the salesmen, and I was highly in favor of an occasional bulletin on the subject to all of our salesmen which was started in '47, and I believe approximately once a year continued doing that and still offered to state that so that they
1154 would be constantly reminded of it. I think that the necessity or the reason we were anxious to make sure that they were reminded of it at fairly frequent intervals was so that, in the desire of getting business and in their practice of realizing that nobody wanted our license without equipment, that they wouldn't overlook and forget that that was available if anyone should want it.

1155 The Court: Do you have a change in personnel from year to year?

The Witness: We do have some occasionally but I think even men who have been with us, even though they have been with us for some time, if over a period of several years no one had ever asked for a license without equipment, they might easily forget they had been given such advice; so, about once a year we put out the bulletin with my hearty approval so they could not forget that it was available and it would include any person that would come into the organization and might have overlooked that particular fact.

Q. (By Mr. Meroni.) Now, when I refer to these form letters I was referring to these forms such as letter E, F, G and H appearing as a part of this Exhibit 26. Did you understand that I was referring to such forms when I presented the question to you?

A. This last question?

Q. The one having to do with the form letters that were circularized to your customers in 1953.

A. Yes, I believe that these are reproductions of those form letter paragraphs.

Q. You apparently sent such a form letter to
1156 Webcor and they characterized it as ridiculous?

A. That is my understanding, yes.

Q. Did you ever have anybody take advantage of that offer?

A. No.

Q. If they had taken advantage of it, they would have had to forfeit all of their initial expenditure for the equipment, would they not?

A. We don't term that they have any expenditure for equipment in the initial fee.

Q. Isn't it a fact that you receive initial fees varying from five to $40,000 for an installation?

A. Yes.

Q. Now, supposing a customer had paid you $40,000 for an installation, and if it wanted to return the equipment and just pay you a monthly fee or royalty, they would not get any of that $40,000 back, would they—cash?

A. No, there would have been some forfeiture there, that is correct.

Q. The only benefit they would have had would have been a lowering in the monthly fee?

A. Yes.

Q. For example, in Form E here, I might read this one as being an example: "We wish to inquire whether
1157 you would like to convert the subject electrostatic spray licenses to licenses under which we would furnish you no equipment and under which we would assume no obligation for replacement parts, supervision or service, or patent infringement indemnification. If you should elect to assume responsibility for these items for yourself and return our equipment, your basic minimum monthly fee of $100 for each unit would be reduced to" —I believe that is $80.

A. That would be $80.

Q. "—for each unit, and your initial fee under number" —that would be the contract— "would be reduced from $2,600 to $800." Is that correct?

A. Yes.

Q. That would be true only where they were approaching you for a new installation. If they already had an installation they would not get the money back, is that right?

A. Frankly, I'm not sure. That is five years ago. I don't know if we intended giving back some of their money or not.

Q. But in any event, if they had elected to take advantage of it, the offer you were making to them, they would not only have lost their investment but also would have lost your service for replacement of parts, super-
1158 vision and service, your patent infringement indemnification? They would have lost all those things, wouldn't they?

A. Yes.

The Court: May I interrupt you for another five minute recess? I have Counsel from out of the city.

(Whereupon, there was a short recess.)

1159 After Recess.

Cross-Examination (continued) by Mr. Meront.

Q. A moment ago we were referring to Webster or Webcor. I would like to hand the witness Exhibit LLL-1, 2, 3, and 4 and ask him if he can identify that as the correspondence relating to this Webcor situation?

A. Yes, I believe it is.

Q. The first letter or paper, LLL-1, which comprises two pages, is a typical letter making an offer to them in

which the initial fee is spelled out alternatively as being either $8,400 or $10,400, depending upon what the customer took, is that right?

A. Right.

Q. And Webcor apparently took a license, or did it not?

A. I know they have been a customer of ours. I don't know whether they took a license under this transaction right here. I believe they did.

Q. That was for the No. 2 System?

A. Yes.

Q. Now, in this next letter, LLL-2, it is one of these typical form letters that you sent out to your customers telling them about the fact that they could convert to 1160 a license alone, if they wanted to by returning the equipment?

A. Yes.

Q. And then in response to that form letter, you received a letter from Webster Chicago Corporation which is Webcor which is marked LLL-3, is that correct, sir, indicating interest?

A. Yes.

Q. And apparently you had your sales representative, Mr. Pleva, call on Webcor, isn't that right?

A. Yes.

Q. And LLL-4 is the report he rendered to you after the call, is that so?

A. Yes.

Q. This is the letter that referred to the ridiculous proposition we talked about before, that I mentioned to you?

A. Yes.

Q. Now, in this letter, LLL-4, I notice this statement: "I explained to him that we have always offered our process either with or without equipment, but our records indicated that certain customers had not been advised of

this, and we were simply trying to give everyone the same opportunity to select whichever proposition they preferred." Now, how did your records indicate that, or
1161 is that just a figure of speech?

A. Well, our records certainly indicated that we had no written notification to all customers of this possibility.

Q. Prior to these form letters you sent out in the summer of 1953, you didn't send them out any letters to tell them they could alternatively have either a license with or without equipment, did you?

A. Not all of our customers, no.

Q. Now, I hand you what purports to be a pricing guide for your No. 2 System dated July 15, 1953, marked JJJ-2. Is this the first pricing guide that you sent out in connection with the No. 2 spray process wherein you spelled out to your distributors the difference in fees where equipment was supplied and where equipment was not to be supplied?

A. I recall that there was one earlier than July of 1953.

Q. We haven't seen any here. You say there was one earlier than that where you divided it in that fashion?

A. Not in that fashion because the earlier one, as I recall, related to the detearing process, and the No. 1 process.

Q. This is limited to the No. 2 process? As far as the No. 2 process, I believe this is the first bulletin you sent out? Am I correct in that?

A. I believe that is correct.

1162 Q. Now, in this typical example here, if the customer wanted equipment he would pay an initial fee of $10,000 and a basic monthly fee of $200, monthly fee, 25 per cent of the cost of coating material used, is that correct, in that typical example?

A. Yes, in the case of our supplying the equipment.

Q. Now in that same example where you didn't supply

the equipment, the customer would still have to pay a basic initial fee of $4,000 for the license, and a basic monthly fee of $140, is that correct?

A. That is correct.

Q. Now, the customer, if he elected to not take your equipment, he would lose the benefit of any indemnification, as I understand it?

A. We didn't give patent infringement indemnification.

Q. And they wouldn't get any replacement parts?

A. We didn't give it to them if they took—we didn't give patent infringement indemnification in any case.

Q. Didn't I see some letter this morning where you said something about them losing that?

A. That probably related to the No. 1 process rather than the No. 2 process, and we are now talking about the No. 2 process.

1163 Q. Was your procedure different on the No. 2?

A. Yes. On the No. 1 process we gave patent infringement indemnification up to the amount of fees paid. For the No. 2 we gave no patent infringement indemnification.

Q. On your No. 2 process were you supplied the equipment, you furnished services and maintenance and replacement of the parts?

A. Yes.

Q. And if someone doesn't take the equipment, they lose the benefit of all of that, don't they?

A. That is right.

Q. Now, take this typical example: The customer would apparently in this particular example pay $4,000 regardless of the number of patents that might be applicable, isn't that correct?

A. I presume that is true.

Q. Well, you would have no way of knowing what patents were applicable if you were merely giving a cus-

tomer a license and you didn't know in advance what equipment he was going to use?

A. That is correct, and the sales force never knows what patent is applicable unless specifically asked for.

Q. If you did grant such license for $4,000 the customer would have a license under all of your patents?

1164 A. Well, —

Mr. Gilliom: (interposing) May we move the partial answer be stricken for the purpose of making an objection?

The Court: It will go out for the purpose of the objection.

Mr. Gilliom: The defendant objects on the ground that the question calls for a legal interpretation of the effect of granting a license of a certain type and this witness has not qualified himself to testify as to the legal effect of transactions between parties.

The Court: Read the question, please.

(The last preceding question was read by the Reporter.)

1165 Mr. Meroni: Well, I think he answered that and there was another question if I remember right, your Honor. I think there was another one. I may be mistaken.

Mr. Gilliom: That was a question to which the objection was directed.

Mr. Meroni: Was there a question after that?

The Reporter: No, that was the last question.

The Court: Then the objection was that the question calls for a legal conclusion on the part of the witness?

Mr. Gilliom: Yes, that is correct.

The Court: Your question is directed to policy of the company generally?

Mr. Meroni: That is right, your Honor.

The Court: On all of its licenses issued for $4,000 on the basis of price guide JJJ-2?

Mr. Meroni: That is right.

The Court: The objection will be overruled if it is limited to this exhibit.

A. My understanding is that they would be li-
1166 censed under any patent that would be applicable to their operation.

Q. (By Mr. Meroni.) In other words, as I understand this situation, your salesmen were authorized by this letter to go to a customer and say, if you want a license under our patent for some No. 2 System, even though you may not have it developed yet, we will give you that license for $4,000 plus a monthly fee of $140.00?

A. Yes.

Q. As a matter of fact, you didn't school your salesmen in how to apply patents to devices, did you?

A. Certainly not.

Q. And they wouldn't know what patents were applicable, would they?

A. No.

Q. I now hand you what purports to be another letter NNN Plaintiff's Exhibit NNN to Westinghouse written by one Harold Ransburg, and if you can identify that letter, I will ask you if you can identify that letter as being one that you wrote?

A. Well, it certainly went out over my signature. I can't from my own memory recall whether I dictated this letter. I think that was probably prepared, at least in part, for me by our legal counsel.

1167 Q. No question but what you sent it out though?

A. That is correct.

Q. You don't remember the incident, do you?

A. I vaguely do; I don't remember the particulars. I remember that we had some trouble with their attorney in

Pittsburgh over some of the phraseology or wording or the terms of the agreement.

Q. Well, he didn't like the provision about licensing back the inventions, wasn't that it?

A. No, I think before this time we had omitted any future inventions clauses, is that what you mean?

Q. Yes.

A. No, that had been deleted from the agreement prior to this time, I feel confident.

Q. Prior to 1955?

A. I think so, if my memory serves me rightly.

Q. Well, your difficulty, I take it then with Westinghouse had to do with whether or not that company would acknowledge the validity of your patents?

A. That would be indicated from that letter, yes.

Q. Wasn't there some problem because the patents weren't spelled out and they didn't know what were applicable?

1168 A. I don't recall that detail, no.

Q. You don't have any recollection on that?

A. No, I do not. As a matter of fact, I doubt if that is the case, because I don't remember anyone asking us to spell out which patents were applicable. If there were a case or two, I don't recall it. I don't think that was involved in the Westinghouse situation. I just think they wanted to absolve themselves from any recognition of the validity of our patents.

Q. You say here, "It is our policy not to agree that a licensee con contest the validity of our patents."

I would take it from that that they would be, they wanted to be able to contest the validity of your patents?

A. That sounds like it, but I don't think that they would license under any particular patent.

Q. You say you have no recollection of a customer wanting to know what patents were applicable, is that correct, or what did you say in that respect?

A. I don't believe, I don't personally recall any customers who have asked for which of our patents applied to their operation. If it has happened, it has been—

Q. Well, I would like to refresh your recollection.

1169 You wrote this letter to Avco which is Exhibit XXXX, did you not, and which is part of their agreement No. 5228?

A. Since it relates to a discussion between their Mr. Redfield and Mr. Cutter and our Mr. Downer, I doubt very much if I wrote it. It did go out over my signature.

Q. Well, you were responsible for it?

A. That is correct.

Q. No question about that letter having been sent?

A. No, I wouldn't question that.

Q. And that concerns a No. 2 airless system?

A. You know whether this applies to their Richmond or their national operation?

Q. I can tell you from this document here.

A. No, this relates to the No. 2 Process.

Q. It does?

A. Yes, I can tell from the drawing number.

1170 Q. I believe the forms that you furnished us here indicate that it is, too?

A. Yes.

Q. That is a division of Crosley, isn't it?

A. Crosley is a division of Avco.

Q. And it does relate to the Number 2 System?

A. Yes.

Q. Now, are you—In that case Avco asked for a list of the patents that were applicable, and you sent that list, and it is attached to the letter, is it not?

A. Yes.

Q. Are you aware of the fact . . .

A. (Interposing.) I don't know if they asked if they were applicable. I do recall there was an inadvertence in something to do with Avco that was later corrected.

Q. 'I don't know of any correction on it. But I would like to ask you another question on it.

A. Is this a list of the purported, patents we purported to be to their operation?

Q. That is what your counsel furnished us, the only list furnished us.

A. All right.

Q. Now, according to this letter it constitutes a part and a revision of an agreement, No. 5228; doesn't it?

1171 A. Yes.

Q. Under it they say: "Whereas, Ransburg is the Owner of the United States Letters patent and patent applications set forth in attached Exhibit A, and has the right to grant licenses under the United States Letters patent and patent applications set forth in attached Exhibit B * * *"

These are the two exhibits containing the list of the patents; one contains the patents owned by you, and one contains the patents under which you have rights. Do you recollect that?

A. I don't recall that. It is, no doubt; was negotiated by Mr. Downer.

Q. He is your legal counsel, house attorney, I believe.

A. Yes.

Q. Now, were you aware of the fact that this list included—most of the patents in this list were on the Number 1 System and had nothing to do with the Number 2 System?

A. No. I think like many other things, Mr. Meroni, he might have phoned me and said his secretary was going to bring up a paper for me to sign, that had to do with Avco we were trying to sell, and was down there for a meeting, and I probably signed it without reading it.

Q. There was not any intention to overwhelm it with a large list of patents, was there?

1172 A. No. My part, I don't think I knew in detail what it was all about.

Q. Were you aware of the fact that there was not a single patent in that list that was applicable to the airless installation involved?

A. I was not aware I had signed that letter until you showed it to me. I had • • •

Q. (Interposing.) Were you aware of the fact that one of the patents had to do with the manufacture of carbon paper?

A. No. I wouldn't recognize any of the patent numbers, if I saw them.

Q. You • • •

A. (Interposing.) I believe that that is the inadvertence that has been corrected.

Q. If there has been a correction of it, I have not been apprised of it. I have not seen any paper correcting this. Do you know of any paper correcting it?

A. I believe when we found we had made that error, they were written, and I think a list was made up as to all the patents we own, whereas the contents of the letter or inquiry applied to the patents applying to them, or the wrong ones were used, or the right ones were not pulled out.

1173 Q. Were you aware of the fact that as of January 18, 1954, that the Starkey Patent in suit hadn't issued? You were aware of that fact, were you not?

A. 1954?

Q. Yes, January, 1954. Here's the chart. It shows it issued August 3, '54.

A. All right, I thought • • •

Q. (Interposing.) Were you aware of the fact at that time you did not have a single patent on airless atomization that was applicable to the installation that was involved in this agreement of Plaintiff's Exhibit XXXX? Were you aware of that fact?

A. What is the date of that letter?

Q. January 18, 1954.

A. Yes, I am aware of that.

1178 Q. Mr. Ransburg, in the course of these proceedings, the defendant has answered Interrogatory 4(a) which reads as follows: "Has the defendant ever granted a patent license relating to airless electrostatic spraying as to which it did not enter into a lease agreement with the license?" And the answer was "To date all agreements by which defendant has licensed the use of its airless electrostatic spray coating process contained a provision requiring defendant to furnish to the licensee some but not all of the equipment for using the process."

Have the sales bulletins that you have issued from time to time to your sales personnel and distributors been consistent with the answer there given?

A. I believe so. I don't think the sales bulletin that we ever issued told the salesman that every license that we consummated required us to supply the equipment. I don't think that is what you meant, though, was it?

1179 Q. No, but has your practice been consistent with the answer there expressed that I quoted?

A. Yes.

Q. Now, in answer to Interrogatory No. 3, which is as follows, and I will quote the statement made:

"(a) How many licenses have been granted by defendant on electrostatic spraying, and

"(b) How many of those licenses are still in force and effect?"

And the answer was:

"(A) Seven hundred and thirty-two up to the date of the filing of the complaint." And "Four hundred and sixty-four up to the date of the filing of the complaint."

Have all of those licenses been issued under your jurisdiction?

A. You mean with my knowledge of the details of it?

Q. Have you been in charge, during the entire time of the issuance of these 732 licenses of sales?

A. Yes.

Q. And from the standpoint of the echelon of your company, have all of those licenses been issued under your jurisdiction?

A. I am a little concerned about your terminology
1180 of jurisdiction. If I were gone from the company for six weeks, I am sure licenses were given without my being involved in it.

Q. Let's put it this way: Except for your absence, you were primarily responsible for the issuance of those licenses and leases in the company? That was the phase that was delegated to you, is that right?

A. Yes.

Q. Now, as distinguished from your duties, what did your brother Edwin do?

A. He had charge of all of the research and development and legal aspects of the business.

Q. I want to read to you an admission and ask you a question about it.

No. 7—"The defendant has issued in excess of 300 licenses in the field of airless electrostatic spray coating and in each instance the license provided for the defendant leasing equipment under each such license." And the answer was "Admitted."

Now, I believe you said in that connection that while you granted the first airless license around 1948 that that was an experimental license and that you really got seriously into the matter of this airless type licensing
1181 in 1951, wasn't it?

A. That is when we first publicly announced it, yes.

Q. So that these 300 licenses that are referred to would have been licenses that really commenced around 1951, is that right?

A. Yes, I think we may have had 10 or 12 experimental units out prior to that.

Q. Now, I want to read another admission and ask you a question concerning it with regard to your practice. It is Admission No. 71—"Does the defendant admit that in granting its licenses in the airless electrostatic coating field?

"A.—It has not only granted licenses under its letters patent in suit but also joined with such licenses, leases for equipment furnished by the defendant."

And the answer was "Yes." Would you say that was your general practice in those 300 licenses?

A. Would you reread the last part of that?

The Court: Read the question, please?

(The preceding question was read by the Reporter.)

A. I presume so although we never distinguished 1182 what part was a lease and what part was a license and we normally don't call it a lease in sales work.

Q. You don't dispute that you were leasing equipment, do you?

A. No, I don't dispute that.

Q. Now, continuing with that admission—

"B—Has at all times maintained title to all equipment that is furnished its licensees under its agreement with them." And the answer is "Yes." Is that generally true as to all 300 of those licenses?

A. Yes.

Q. "C—In no case prior to the filing of this suit has it ever actually granted a license without the license being accompanied by a lease of equipmen and the answer was

"Yes." Is that always generally true of all 300 of those licenses?

A. I am not sure, of my own knowledge. I know we do have several No. 1 Process licenses without equipment and I don't know when the first one was effected.

Q. This refers to matters transpiring before the suit was filed, this 300. Now, there was one exception in the settlement of the Hilgren suit, you said.

1183 A. That is true.

Q. And you understand this was limited to the airless matter?

A. Oh, on the airless, I think that would be correct.

Q. That Hilgren installation was an air type, wasn't it?

A. That is correct.

Q. So that I will read this again:

"C—In no case prior to the filing of this suit has it ever actually granted a license without the license being accompanied by a lease of equipment" and the answer was "Yes." Now, assuming that that was limited as stated in the preamble of this admission to the airless electrocoating field, that would be true as to all of them?

A. That is correct.

Q. I would like to read to you Interrogatory No. 10 and the answer and then ask you a question.

"What part of the defendant's cost of each piece of leased equipment is recovered by the defendant at the time of its granting of a lease and a license under its patents" and the answer was "All of it." Was that true without exception?

1184 A. That relates to cost of equipment?

Q. Yes.

A. That would be correct.

Q. Well then yesterday when you said you lost money initially when you commenced your operation, you in every

instant didn't recover all of your money in the initial fees from licenses, but you didn't lose money on any of the licenses?

A. Initially we do.

Q. Then I can't reconcile this answer with that statement because it says here, and I will read it again, "What part of defendant's cost of each piece of leased equipment is recovered by the defendant at the time of its granting a lease and a license under its patents" and your answer was "All of it."

A. I think I could explain that to you.

Q. Do so.

A. Well, I think that the misunderstanding comes about from your lack of appreciation of what is involved in our type of business. Our greatest expense is by far our engineering of these jobs and the sales engineering and laboratory engineering and the development engi-
1185 neering far exceed, and the installation supervision, those expenses far exceed the cost of the equipment. The cost of the equipment we have always considered as more or less a necessary evil or incidental to our operation. I could give you some idea of the negative of that by mentioning the square footage of area involved in the manufacturing of the equipment. For instance, the company occupies two buildings, one of 65,000 square feet and another one of 80,000 square feet of which on the automatic equipment not more than oh, two or three thousand square feet is devoted to assembling and testing and improving the actual equipment we ship, so the cost of the equipment is a very small part of what we supply to the customer in the way of our expenses, and when you go rate all of our expenses against the initial fees we collect, our expenses far exceed the initial fees we collect, so if you supply that to an average condition we have made some studies to indicate it takes us two or three years to turn it in to a

profitable picture considering the development and engineering work and installation work that we do in connection with an installation.

Q. Well, you are doing a lot of development work
1186 in anticipation of future activities, aren't you?

A. Oh, yes.

Q. So that not all of it is charged to current activities?

A. That could be said.

Q. In other words, you are trying to develop additional improvements to expand your business, are you not?

A. Yes.

Q. Now, you don't mean to convey the impression that if you charge a fee of $5,000 to $40,000 initially for the license and lease that there isn't some part of that that is attributable to engineering research, do you?

A. Some part of it should be attributable to it. We haven't tried to break it down on a specific installation.

1187 Q. Now according to the answer to Interrogatory 40 prior to the issuance of the Starkey patent on August 3, 1954, that is the Starkey patent here in suit, your company had issued 171 airless electrostatic spray coating licenses and leases. Does that fit in with your recollection?

A. I wouldn't be surprised that that would be a correct figure, yes.

Q. Would it be accurate to say that prior to the issuance of the Starkey, et al. patent you had no patent applicable to the airless spraying?

A. I believe that there may have been one or two issued prior to the Starkey patent, but I am not sure.

Q. I want to now read to you Interrogatory 52 and its answer and then ask you a question about it:

"Q. Has defendant ever submitted a license under its

Starkey patent alone without an accompanying proposed agreement for furnishing of equipment by the defendant?"

And the answer was:

"A. Defendant has never submitted any license limited to the Starkey patent alone."

Would that be true of all of the airless electrostatic
1188 coating licenses and leases that your company has issued?

A. I believe that we have never submitted a license under any specific single patent.

Q. Well, as a matter of fact, did you bother in your department to keep any record of what patents were applicable to each of the licenses as you granted them?

A. No, we did not.

Q. Did anybody keep any such record?

A. Not to my knowledge.

Q. I would like to read you Admission No. 84 and the answer and then ask you a question, sir:

"84-A. Beginning around March 21, 1949 and for several years thereafter, defendant leased and licensed its No. 2 airless electrostatic coating systems without having issued to it any letters patent affording the defendant exclusive patent rights to airless electrostatic spray coating." And the answer was admitted.

As far as you know, was that true of most of those 171 licenses that we referred to a moment ago?

A. Yes.

Q. Now I would like to read to you another admission and ask you a question about it.

1189 "57. Does defendant admit that in its licensing program on electrostatic spraying systems it has for the most part used printed forms of licenses which do not single out any particular patents by numbers, of those in the portfolio of the defendant?" And the answer was yes.

Is that true of practically all your licenses?

A. Yes.

Q. In other words, you never did incorporate in the printed forms any patent numbers as far as you know?

A. I believe that is correct.

Q. Wouldn't you say the vast majority of the licenses you have granted have been printed?

A. Yes.

Q. Now I would like to read to you two other interrogatories and ask you some questions about them, 160 and 161. First we will take 160:

"A. Did the defendant or its predecessor ever receive in writing any notices of patent infringement from Behr-Manning?" The answer was "No."

Do you know of any document or written notice of infringement from Behr-Manning?

1190 A. No, I don't believe there was any.

Q. As a matter of fact, did they ever specifically charge your company with infringement of any patent?

A. No.

Q. Now in connection with Interrogatory 161:

A. Did the defendant or its predecessor ever notify in writing Behr-Manning of its infringement of any of defendant's patents?" And the answer was "No."

Do you know of any document where you notified Behr-Maning of infringement of any Ransburg patents?

A. No, I do not.

Q. As a matter of fact, did you at any time advise them in any way that Behr-Manning was infringing on any of your patents?

A. No.

Q. By the way, were you ever advised or your company advised in any way that some of the patents under which you were licensed by Behr-Manning were involved in the suit in Boston?

A. Not to my knowledge.

Q. You never received any communications from Behr-Manning or any representatives of Behr-Manning
1191 of the existence of such a suit or the judgment or anything connected with it?

A. I frankly don't recall it.

Q. Well, who would know about that if there was such a thing?

A. If we were formally and officially advised, our counsel would know. Of course, Ed might know.

Q. Well, ordinarily if letters come into the company of that order from Behr-Manning, who do they go to first?

A. It would depend upon who it was from. I think it would probably go to Ed Ransburg if they were of the nature that you are describing.

Q. But as far as you know, you never recall hearing about such letters or communications and none came to your attention?

A. I don't say that none came to my attention. If they did, it was of some little consequence to me or to us.

Q. Do you recall if you had the licenses with Behr-Manning or executed them, having any correspondence with them at all?

A. I think we have received some correspondence, yes.

Q. Well, you had some in connection with that patent under which Behr-Manning inadvertently gave you rights and you had to go to Research Corporation to get the rights?

A. Yes, I am sure we had some correspondence on that.

Q. Now since that, have you had any other correspondence with them that you know of?

1192 A. I presume we have had some.

Q. Well, you wouldn't be prepared, then, to state under oath that your company was not advised of the existence of that Boston litigation and of the judgment entered therein?

A. I could not say that we were not advised. As a matter of fact, I would gamble that we were, because our attorneys tried to watch those things closely, I mean, those are all publicized, are they not?

Q. Yes.

A. I think we probably knew about it.

Q. You have several house attorneys, do you not?

A. Two.

Q. Part of their duties is to watch for such things?

A. That is right.

Q. Now I notice most of your licenses have a termination provision of three to five years. I believe most of them are three years, which you can terminate for any reason. Are you acquainted with that?

A. Yes.

Q. Whose idea was it to incorporate such a termination in the licenses?

Mr. Gilliom: If the Court please, I think the defendant will object to the question on the ground that the mat-
1193 ter of whose idea originated a certain provision in written contracts, would speak for themselves and would not be relevant to any issue.

Mr. Meroni: In anti-trust actions, Your Honor, I think it is pertinent to show the circumstances if there were any.

The Court: Well, if it is a disclosure of witness, that is one thing. I will overrule the objection and you may answer that, if you know.

A. Well, I think that, in general, I can say that it was Ed's idea to make it three years, and my idea to make it five years.

Q. Why did you want to be in a position to terminate any of these licenses without cause?

A. Well, it was a gradually growing thing, I think, that originally we admitted and knew that we didn't know what we were doing in marketing these processes. We didn't

know whether our charges were right; we didn't know what legal hazards we might be effecting, we had rather serious fright, I believe it was in 1944, when we found that the Smyser patent reissued some five or six months before we were aware of it—six or eight months, and during that time we were giving full indemnification. It was just
1194 largely a matter of being conservative and giving ourselves some latitude to be fair and reasonable later, if terms should change. It did give us the option of making everyone in a given field conform to the same terms if we deemed it the fairest way to do the job.

Q. Well, even after the patent expired and others started to come on the market with the air type electrostatic systems, did you make any effort to take that provision out of your No. 1 contracts?

A. I think to some extent it was habit by then, and industry had accepted it as being fair and reasonable, and we have never taken advantage of it. I think industry has wholly become less apprehensive about a short term.
1195 Q. In other words, you have got the industry accustomed to your way of doing business?

A. I think they are.

Q. And that momentum carried on to airless picture when you first started and had no patent protection, isn't that right?

A. I imagine that momentum had its influence on our thinking, yes.

Q. Now, when you came out with your printed forms on the No. 2 or airless type systems, you commenced inserting in them a paragraph 11, having to do with future inventions by the licensee. Do you remember that?

A. Yes.

Q. What occasioned that to change in your practice?

A. We knew that we had a development that was very basic and broad and had some large future implications and

we knew that there were possibilities that anyone in using it might develop some minor improvement that would be useful to all other customers and all future customers, and we wanted to make it, the arrangement, so we would have those advantages and our other customers would have those advantages without any penalty to ourself; and we chose to take whatever sales resistance there might be in
1196 offering it with that term in return for the free ability to extend any such minor developments to everyone as they came along.

Q. Well, initially when you came out with your No. 2 system you had no patent protection on it and were you anxious by this provision to get some protection from others, if you could?

A. I think before 1949 we probably had some claim granted, if that is what you mean.

Q. I mean issued patents, you had no issued patents.

A. No.

Q. As a matter of fact in all of these hundreds of licenses that you granted under the No. 2 system, has a single licensee actually ever made any improvement that they turned over to you?

A. As a matter of fact, a normal licensee has never to my knowledge.

Q. There was not any incentive for them to do it, was there?

A. Only to improve their own operation.

Q. But they would have to give you free rights so you could license their competition, wouldn't they?

A. That is correct.

Q. Now, I hand you what purports to be a sales
1197 bulletin No. 132, Binks Exhibit III-1, and ask you if you issued that bulletin, to your sales personnel.

A. Yes, I did.

Q. This bulletin concerns itself with reciprocators, does it not?

A. Yes, in part.

Q. Just so the Court will know what we are talking about when we talk about reciprocators, let's refer to this Chart 17-B. The reciprocator would be the mechanism by which the atomizing head is moved up and down, is that correct?

A. Right.

Q. You didn't manufacture reciprocators, did you?

A. We made the first eight or twelve.

Q. But for the most part those that have been used by your licensees have been furnished elsewhere?

A. At our direction and instruction we preferred not to manufacture them, yes.

Q. Now, let's assume a licensee purchased a reciprocator some place else and was going to use that with your installation. According to this bulletin if the reciprocator was 36 inches or less the licensee had to pay you a fee of $500; if it was between 36 inches and 60 inches the
1198 licensee had to pay a fee of a thousand dollars; and if it was above 60 inches the licensee had to pay you a fee of $1,500, is that correct?

A. Yes, that is correct.

Q. Wasn't that sort of a penalty because the licensee was using a reciprocator rather than buying additional units from you?

A. I think the evidence will show by our performance of it there was no penalty at all.

Q. Well, actually, you had, you would have been better off if the customer, I suppose had bought many units from you?

A. You mean if we had a choice between their buying two units instead of one unit?

Q. Yes.

A. We have never tried to get them to put in more equipment than what was required for the job.

Q. But be it as it may, the fact remains in the majority of the cases where your licensees have used reciprocators, the licensees have had to pay an increase in the initial fee?

A. Increase over what?

Q. Over what they would have paid without the
1199 reciprocator.

A. I am sorry. If you limit that question to this, I will say that is correct.

Q. That is because you don't use a reciprocator with a rotary bell, is that right?

A. We do in some cases.

Q. Explain that to the Court.

A. Well, if your question deals only with the disk, then you are correct, they pay more for reciprocating disks than a stationary disk in the initial fee. There in the triple heads, which often have, very often have one reciprocating disk which would replace several triples heads, depending upon the circumstances, and in that case the customer would pay much less for one reciprocating disk than the several triple heads that could be used to replace it.

Q. But if you compared it with a customer using only a disk and one using a disk with a reciprocator, the one using it with a reciprocator would pay more than the one just using the disk alone?

A. That is correct.

Q. And those amounts or fees are spelled out in your bulletins to your salesmen?

A. Yes.

Q. Now, these bulletins' instructions that you issue
1200 from time to time were widely circulated among your salesmen?

A. Among our salesmen, yes.

Q. It was for their personal use, though?

A. Yes, it wasn't for their reproduction and redistribution to customers, if that is what you mean.

* * * * *

PLAINTIFF'S EXHIBIT KKKK.

1 EDWIN M. RANSBURG, being first duly sworn to testify the truth, the whole truth and nothing but the truth relating to said case, deposes and says:

Direct Examination.

Questions by Mr. Charles Meroni.

Q. 1. Please state your name.

A. E. M. Ransburg.

Q. 2. And the "E" stands for what?

A. For Edwin.

Q. 3. Where do you reside, Mr. Ransburg?

A. Indianapolis.

Q. 4. How old are you, sir?

A. Forty-three.

Q. 5. By whom are you employed presently?

A. Ransburg Electro-Coating Corporation.

Q. 6. In what capacity?

A. Vice-President.

Q. 7. As Vice-President you have any particular duties assigned to you?

A. Yes, I administer the Engineering Department.

* * * * * *

10 Q. 65. Will you tell us what the differences are between No. 1 and No. 2?

A. Well, we think of No. 1 as a compressed air spray gun introducing the paint into an electrostatic field and directed at an acute angle or substantially parallel to the path of the conveyor and the No. 2 is eliminating that compressed air spray gun.

Q. 66. The No. 2 system is an electrostatic system?

A. Yes.

Q. 67. Would you say that the No. 2 system is distin-

guishable broadly from the 1, in that it effects atomization, effects dispersion and depositing solely by electrostatic means, whereas the No. 1 uses in addition the compressed air spray gun?

A. I would say the air gun does the atomizing and
11 sprays at an acute angle to the conveyor.

Q. 68. In the No. 1 system?

A. Yes, No. 1, and the No. 2 does not use the compressed air system.

Q. 69. What does the electrostatic field in the No. 1 system do, if anything?

A. After the particles are atomized, it deposits some of the paint on the articles.

Q. 70. Would you say that it is a positive fact that in the No. 1 system no atomization is effected by the electrostatic field?

A. It is not effected, to my knowledge.

Q. 71. Have you eevr made any tests to determine whether or not the electrostatic field in the No. 1 system effected any atomization?

A. I haven't.

Q. 72. Has anyone in the Company made any such tests?

A. Not that I know of.

Q. 73. What is the voltage that you use in the No. 1 system, as licensed by your Company?

A. You mean how high voltage?

Q. 74. Can you give us the range of voltage that has been used?

12 A. I believe it has been referred to in the interrogatories. I believe that would be more accurate.

Q. 75. I don't believe there was any answer in the interrogatory on the No. 1 system.

A. We generally think of the order of 100,000 volts. However, I am not sure if it will measure that high.

Q. 76. On the No. 1 system?

A. It might be rated higher voltage than the actual voltage would be.

Q. 77. What is meant by the voltage gradient?

A. To me it means the intensity of the electrostatic field at a given voltage.

Q. 78. How does the voltage gradient in the No. 1 system compare with that in the No. 2 system as licensed by your Company?

A. The voltage gradient in any part of the field?

Q. 79. In a comparable part in each instance.

A. The processes aren't comparable.

Q. 80. I don't mean to say that the processes are comparable but if you were to measure at a given point in the field of one and at the same point in the field of the other one, what would be the result of the comparison? Would they be the same or different?

A. I think if you had 100,000 volts, a 100,000 volt field or something of that order, opposite to some other electrode such as an article, the same voltage, and the same radius of curvature, they would have similar gradients.

Q. 81. In making that measurement would the space between the electrodes be a factor? I am assuming that the emitter is one electrode and the piece of work is another?

A. In both instances?

Q. 82. Yes.

A. Would spacing of what?

Q. 83. The spacing of the point of discharge of the paint from the emitter, whether it be a gun type or pure electrostatic type, and the piece of work, would that spacing be a factor?

A. I think the air gun in the No. 1 system of course generally is not the electrode. In the No. 2 system, it is the electrode.

Q. 84. What is the electrode in the No. 1 system?

A. Usually separate wires.

14 Q. 85. Are they located in proximity to the gun?

A. Yes, they are located some distance away from the gun, but not far.

Q. 86. What I am trying to ascertain is the fact that if a piece of work is six feet away, the coating process may not work, whereas say it is only a matter of a foot, it might work. Isn't space a factor there in either system?

A. Oh, we like to have a high voltage gradient in either system. We would like to have a pretty effective voltage gradient.

Q. 87. Well now, in the No. 1 system, you had a voltage gradient and how was that produced, by a power pack?

A. Voltage pack. That would be the source of power.

Q. 88. I don't understand that your Company claims any monopoly on all power packs, is that right?

A. That is right.

Q. 89. Those are available in the trade?

A. Yes, as far as I know.

15 Q. 93. Now, you are co-inventor with Mr. Starkey on this patent that is in suit. Just how did you arrive at this process that you claimed as a joint invention? What did you go through in arriving at it with Mr. Starkey? Tell us briefly the history of it.

A. All right. Mr. Starkey dipped a paint brush in some paint and put it at a different potential to a piece of paper and applied some of the coating material to the paper, or he attracted material from the paint brush to the piece of paper.

Q. 94. Was the paper spaced away from the brush?

16 A. Yes.

Q. 95. How far?

A. About a foot.

Q. 96. Did you witness that?

A. Not the first one. That was the second one and I didn't witness that, either.

Q. 97. You are talking about the first step where the paint brush was spaced from a piece of paper and having a voltage gradient between them?

A. That was the second step. When I became familiar with it I was apprised of the fact that he had coated a sheet of paper by maintaining a brush at one potential and a piece of paper at another potential.

Q. 98. And did you see that at that time?

A. No, I saw the piece of paper immediately afterward.

Q. 99. Did he repeat the test for you in your presence?

A. I think he did.

Q. 100. Do you recall what the voltage was and the spacing between these two?

A. Be eight to twelve inches between the two, with a voltage rated at 85 to 90 thousand volts.

Q. 101. Was it a small or a huge brush?

17 A. Two inch brush.

Q. 102. What was the size of the piece of paper?

A. Eight and one half by eleven.

Q. 103. What kind of material was he spraying?

A. Black paint.

Q. 104. When you witnessed it, what did you see?

A. We have that sample here, a sample of that piece of paper.

Q. 105. You have the paint brush too?

A. No.

* * * * *

21 Q. 134. Now, in that test that was made by Mr. Starkey was there any provision whatsoever made for controlling the rate at which paint was fed to the brush?

A. I don't think so.

Q. 135. How did the paint get on the brush, as you understood it?

A. Dipped in a paint bucket.

Q. 136. Well, in the previous electrostatic processes
22 or systems that you had licensed prior to this test, in which you used a gun, was the rate of flow of liquid to the gun controlled?

A. Our guns had paint introduced at a controlled rate.

Q. 137. How did you usually effect such control in such systems?

A. With fluid pressure regulators.

* * * * *

23 Q. 145. You don't claim to have any monopoly in your Company on impellers for pushing paint, whether it be a diaphragm or a piston for a pump, do you?

A. Not broadly.

Q. 146. Now, after this step by Mr. Starkey, what next transpired in this development of the so-called Starkey, et al. process that is here in suit as the No. 2 system?

A. A customer visited us on November the 9th and brought with him a part, I believe for radar equipment, that he wanted to coat that part and in working with that customer, we dipped the part in some varnish, and it filled with liquid, or got a lot of liquid in it, and we were trying to remove the excess and I was performing the work and noticed the beautiful spray coming off of that.

Q. 147. Is that sometimes referred to as a detearing process?

A. We were trying to detear the part, yes.

24 Q. 148. That is sort of the reverse of the action of depositing, isn't it?

A. It is removal, that is right.

Q. 149. In other words, what you do is remove by electrostatic means excess material on a part that is coated, is that correct?

A. Yes.

Q. 150. Tell us exactly what transpired at that time.

What equipment did you have and what did you do and what did you observe?

A. Well, this was being treated on the same unit that this paint brush test had been run on. The part was dipped in a shallow pan of varnish and then suspended above the grids of opposite potential and the high voltage was turned on and it sprayed the bottom of the part.

Q. 151. Onto what was the surplus paint sprayed?

A. Onto the detearing grid first and then later we repeated it with paper.

Q. 152. And what was your observation of the results as compared with what you had seen on the paint brush?

A. Well, they seemed to give forth a very nice uniform spray.

• • • • •

36 Q. 209. In your two patents that I have been referring to, reference is made to electrostatic. What do you understand by the term "electrostatic?"

A. Oh • • •

Q. 210. (Interposing.) And with particular regard to the systems that you have licensed, the No. 1 and No. 2 system.

A. The word "electrostatic" is electrical energy
37 without appreciable flow of current.

Q. 211. And can it occur with AC current?

A. Yes.

• • • • •

42 Q. 236. According to your patent, 18 represents some sort of, it looks like a rectangular • • •

A. (Interposing.) On 18—I am sorry. I was looking over here.

• • • • •

Q. 241. And that is what might be termed the emitter?

A. That would be a satisfactory word. We call them atomizing heads.

• • • • •

45 Q. 256. In this development which you carried on and which was later exemplified by Figure 1, was there enough pressure behind the paint in the reservoirs, 18, so that the paint would flow out of the holes even though the electrostatic force was not on?

A. It would flow out at a very slow rate.

Q. 257. It would sort of ooze out?

A. Yes.

Q. 258. How much pressure did you actually use? Have you any recollection?

A. I don't recall.

Q. 259. Was it a small amount or a large amount?

A. Those are relative terms.

Q. 260. Was it in the order of say a couple of pounds?

46 A. Or more.

Q. 261. As a matter of fact, in air guns, they use very low pressure too, don't they?

A. The No. 1 system we frequently go down to two or four pounds.

Q. 262. You don't use any more air pressure in this system exemplified by Figure 1, you made?

A. Not appreciably, not ten times the normal amount or anything like that.

Q. 263. Now, in this emitter that you built, like Figure 1, with Mr. Starkey, when you turned on the electric energy of power pack, 20, to set up an electrostatic field, what happened to the paint or the droplets of paint that had oozed out of the holes, 15?

A. They atomized and went on to the target.

Q. 264. Now, did you have any separate means, separate means apart from the electrostatic force to disperse the atomized liquid?

A. No, the electrostatic field did all the dispersing.

Q. 265. Did you have any separate means aside from the atomizing energy to effect coating?

A. No. The electrostatic field, plus the small
47 amount of pressure you were talking about caused all of the coating.

Q. 266. Did you witness that operation?

A. Oh, of course.

Q. 267. Did you ever observe in operating that system like Figure 1, where the droplets of discharged paint were atomized without any dispersion?

A. No.

Q. 268. The paint was always dispersed?

A. Yes. During that operation of this device, yes.

Q. 269. When you turned on the energy the paint always would be automatically coated on the object?

A. Be deposited onto the object.

Q. 270. The motivating force for putting it on the object was not the pressure behind the fluid but it was electrostatic force?

A. Right.

* * * * * *

55 Q. 314. As I understand it, as soon as you turned the atomizing energy on from power pack 20, you automatically effected atomization, dispersion and coating, is that correct?

A. If we had the fluid introducing little droplets of paint.

Q. 315. Assuming paint was in the orifices or coming out of the orifices, 15, you automatically got atomization, dispersion and coating.

A. If it was coming out in little droplets. I don't know what you mean by automatic, however.

Q. 316. You didn't have to do anything further than turn on the energy to get the atomization?

56 A. If we fed the paint properly.

Q. 317. Then you had atomization, dispersion and coating?

A. If we fed the paint properly and located it as we did.

Q. 318. I understand you used a conventional flow regulator so there was no problem about feeding? You used it the same as you always • • •

A. (Interposing.) Standard fluid pressures.

Q. 319. So assuming that you used the standard fluid pressure regulator • • •

A. (Interposing.) If adjusted properly.

Q. 320. And adjusted properly, which you would have to do in any feeding system, and it was hooked up to the head, 13, as soon as you turned on the energy from the pack 20, you effected atomization, dispersion and coating?

A. Right.

Q. 321. You couldn't effect one without the other, could you?

A. Not with the setup we used.

Q. 322. Well, I mean as far as the setup shown in your patent here No. 2685536, you couldn't effect one without the other?

57 A. With the paint and all that we were using, why they all worked together.

• • • • •

59 Q. 336. Now, with reference to this form shown in Figures 5 and 6, which you say you gave to your attorneys in the form of sketches, do the needles, 215, define the points of discharge of the particles or droplets of paint?

A. You mean the point of atomization?

Q. 337. Yes.

A. The point of atomization would be just below the needles, below the droplets supported on each needle.

Q. 338. On the pointed end of each needle?

A. The droplet would be supported on the end of the needle and then the atomization would take place from the droplet.

Q. 339. Does the needle have a lower pointed end as shown in Figure No. 5?

A. Yes.

Q. 340. And would the droplet be supported from the pointed end?

A. Yes.

60 Q. 341. These needles are closely spaced and aligned, are they?

A. The needles themselves are butted up against each other.

Q. 342. Well, are there pointed ends spaced from each other?

A. Yes.

Q. 343. And they serve to define a plurality of globule or particle paints at the atomization area, is that right?

A. At the atomizing area?

Q. 344. Yes.

A. They support a plurality of droplets immediately above the atomizing zone.

Q. 345. Well, what I am driving at, these droplets are supported in spaced relationship by the pointed tips of the needles until they are atomixed?

A. Yes.

Q. 346. And then when they are atomized they are dispersed toward the object being coated?

A. Dispersed. I'd say they are dispersed laterally as they go toward the object being coated.

Q. 347. This form then as shown in Figures 5 and 6
61 differs from that shown in Figures 1 and 3 in that the points of paint or whatever you call them, are supported on the tips of the needles, 215, instead of coming out of the holes, 15, as in the other forms, is that right?

A. The droplets are supported on the tips of the needles instead of the droplets coming out of holes.

Q. 348. When they would come out the holes they would be supported momentarily by the wall supporting the hole, the edge of the hole?

A. Yes.

Q. 349. Until they are atomized?

A. No, the droplets are never atomized. They just give off atomized material.

Q. 350. What do you mean by that, sir? Can you explain it to us?

A. Well, the droplet is supported there on the head and as new material is fed into the droplet, material is also being removed from the droplet at the same rate, being removed by the electrostatic field.

Q. 351. In other words, as this droplet or point of
62 paint is formed, it is immediately removed by the electrostatic force and another droplet takes its place?

A. No, I don't mean that.

Q. 352. What do you mean?

A. Just what I said, that a droplet is supported there and as material is removed new material is fed into the droplet.

Q. 353. It is a continuing droplet, then?

A. That is right.

• • • • •

64 Q. 364. So in all three of these forms you have some means—in the one case the orifice is 15 and in the other case the needle is 215 and in the third case the wire wrapping 315 for supporting the spaced droplets of paint as they come out of the applicator head?

A. I didn't know what you were driving at when you were listing those numbers so I wasn't able to follow your question.

• • • • •

65 Q. 365. Mr. Ransburg, referring again to your patent No. 2658009, Exhibit C, do you know whether you ever built that device?

A. Yes, we did.

Q. 366. Ever put it into production and commercialize it?

A. Not the specific device as shown.

Q. 367. According to that disclosure, you undertake there to set up two different electrostatic fields, is that correct?

A. Well, in that there is a field from the gun and a field from the deflecting electrode.

Q. 368. In the first paragraph of this patent No. 2658009, reference is made to the fact that this inven-
66 tion relates to electrostatic processes such as that shown in a number of pending applications, the first of which is your Starkey and Ransburg application, Serial No. 556390, which is now issued to Patent No. 2685536. You find that first paragraph?

A. Yes.

Q. 369. Now, what I would like to ask you is whether, as far as you know, you developed the structure comprising the subject of this Ransburg Patent 2658009, Exhibit C, before or after your work with Mr. Starkey in developing the subject matter of your 536 Patent in suit?

Mr. Hume: What relevancy has that?

Mr. Meroni: It will appear.

A. Developed it after.

Mr. Meroni: We have an allegation of double patenting with respect to Exhibit C in the pleadings.

Mr. Hume: As a defense against the patent in suit?

Mr. Meroni: That is right.

67 Mr. Hume: Touching the alleged invalidity of the patent in suit?

Mr. Meroni: That is right.

Q. 370. (By Mr. Meroni.) Referring to Figure 3, for example, let's say Figures 3 and 4 of No. 2658009, Exhibit C, if you omitted the electrodes, 329 and 330 at the end of the applicator, how would that applicator or atomizing head compare with the one that you worked on with Mr. Starkey in the latter part of 1943?

A. Which electrodes were those?

Q. 371. 329 and 330.

A. How would that compare?

Q. 372. Yes.

A. Perform the same function.

Q. 373. Now, you refer also to the edge, 316, of that device shown in Figure 4, in column six of the patent, line 41 as a corona discharge edge.

A. Right where you have drawn the pencil mark?

Q. 374. Yes. What is a corona discharge edge?

A. An edge that can give forth corona discharge.

Q. 375. Did the device that you worked on with Mr. Starkey in the latter part of 1943 leading up to the filing of your application of the Starkey Patent 536 in suit

68 have a corona discharge edge? Here is a copy of that patent, Exhibit A.

A. It disclosed droplets that could give forth a corona discharge.

Q. 376. Does a corona discharge, insofar as your patent Exhibit A is concerned, play any part in the atomization according to your understanding?

A. I don't know how much effect the corona discharge has upon the atomization.

Q. 377. But you did see it there when you looked at it?

A. I have seen corona discharge from the No. 2 process atomizing head.

• • • • •

81 Q. 439. By the way, Mr. Ransburg, did your Company ever put into production for commercial sale any

82 of the four different types of applicator heads or atomizing heads shown in the patent?

A. You mean identical to those shown in the patent without modification?

Q. 440. Either identical or substantially identical.

A. We put one into commercial use that had an improvement or modification in it.

Q. 441. But you didn't put any into production without the modification or improvement?

A. No.

Q. 442. What was the improvement that you are talking about?

A. Where we smoothed out the edge of the metal plate and ran the coating material down one side of the plate.

Q. 443. Did it have a wire wrapping?

A. No.

Q. 444. Did it have a plurality of holes punched any place for the paint to go through?

A. No.

Q. 445. Did it have a plurality of needles?

A. No.

Q. 446. Actually wasn't the first commercially pro-
83 duced Ransburg No. 2 head, which was made on a production basis and sold by your Company of the so-called cone or bell type?

A. Made on a production basis?

Q. 447. Yes.

A. You mean where we put out a lot of them, where we have many, many units?

Q. 448. Yes, where you produced them on large scale for licensing to the trade.

A. On large scale use, yes.

Q. 449. You had one use of a different type, I believe, at the Chicago Enamel Steel & Sign Company?

A. Yes.

Q. 450. Was there any other?

A. Not in commercial use.

Q. 451. That is one that was referred to in the prosecution of your application in an affidavit of Mr. Simmons. Do you remember that?

A. Yes.

Q. 452. How did it happen you didn't go into commercial production with that one and chose the cone one in preference?

A. We liked the cone one better.

84 Q. 453. Does the cone type effect some discharge through centrifugal means?

A. Some.

Q. 454. That is supplemented by the electrostatic action?

A. The feeding is substantially centrifugal and the atomizing is substantially electrostatic, generally speaking.

Q. 455. If you cut off the electrostatic force, would some of the paint still be thrown out?

A. Yes, but in large particles.

Q. 456. What is the significance of large particles as distinguished from small particles and how do you determine whether they are large or small?

A. I think all spray men pay a little attention to what kind of material they are getting and a good spray man knows when he is getting particles small enough. He can tell by the deposition on the article.

Q. 457. That has been true, you would say, since the inception of the spray gun?

A. I would assume so.

Q. 458. That would be long prior to any work on this 536 device at the end of 1943?

85 A. Yes.

Q. 459. In the course of your work with the device at the Enamel Sign Company, were there some specific objections to it that occurred to you?

A. What do you mean "specific objections"?

Q. 460. Well, some reasons why you didn't put it into production. In other words, you spent a great deal of money. What was your reason for not adopting it at that time?

A. We liked the round head better.

Q. 461. Did the round head or cup or conical type, or whatever you want to call it, have advantages over it? Is that why you liked it better?

A. Yes, I think it had some advantages.

Q. 462. What are the advantages?

A. It can be more readily oriented in relation to spraying in different directions. That is one advantage. Another advantage is that when we spin the round heads, centrifugal force thins the film and that is beneficial.

Q. 463. How about cleaning? Would you say it is easier to clean the cone type than the wire type you had down at the Chicago Enamel Sign Company?

86 A. We didn't have a wire type at Enamel Steel & Sign.

Q. 464. What type did you have there?

A. The flat plate over which we flowed the material to the edge, at which it atomized and painted the articles.

Q. 465. How was the flow of paint controlled there?

A. I believe we had a paint feed orifice along the blade.

Q. 466. In any event, that type that you had at the Chicago Enamel Company is not shown specifically in your Starkey, et al. Patent, the 536 patent in suit?

A. The entire arrangement is now shown there.

Q. 467. Well, is the applicator head at all shown and if so, point it out.

A. Well, many similar features are shown.

Q. 468. Well, do you show any head here with a plate such as you used in that Chicago Enamel installation?

A. You mean with an exposed plate?

Q. 469. Yes.

A. Well, the Enamel Steel & Sign plate had a substantially smooth, sharp edge. These heads here had an irregular leading edge which was atomized.

Q. 470. I believe every one of the applicators or
87 heads shown in your 536 patent are of a V-shape. Was there one at the Enamel Company of a V-shape?

A. Yes, the edge was V-shaped, the edge where the atomization took place, yes.

Q. 471. As I understand it, you used a different way of supplying controlled paint to it than shown in Figure 1?

A. We used a hose, pressure on the hose, but we reciprocated the end of the hose.

Q. 472. You recall offhand when you made that installation at the Chicago Enamel Company?

A. I think if you refer to the file wrapper, it will give you the date.

Q. 473. You mean Mr. Simmons' affidavit?

A. Yes.

Q. 474. Mr. Ransburg, if at any time my question is not clear, please do not hesitate to ask me to clarify it, as I have no intention of asking you tricky questions. All I am trying to do is to get the facts.

Here is Mr. Simmons' affidavit which was filed in the Patent Office on May 4, 1949 and starts at pag. 4 of my copy. You are free to refer to it and refresh your
88 recollection as to the time.

A. From the date here, I would gather it was April the 15th of 1949 that it was put into production use.

Q. 475. Was that the first commercial installation that was made of this so-called electrostatic airless spraying, that you know of?

A. The first one where enough production was run where we could call it commercial production, I believe.

Q. 476. Well, I mean by that, was it the first customer that had one of your airless type of sprayers?

A. Yes.

Q. 477. Did you, at your plant in Indianapolis or any place else, commercially use the airless electrostatic system for manufacture of parts that were sold through channels of commerce?

A. Not what I would call commercial.

Q. 478. I hand you what purports to be the Turner Patent No. 2651287 issued September 8, 1953 from an application filed March 10, 1949 and ask you if you can identify the structure there shown and whether it has any relation
89 to what you installed at the Chicago Enamel Company.

A. Parts of the drawing have some similarity to what was shown at Enamel Steel.

Q. 479. How do the principles of operation of that device compare with the one you installed at Chicago Enamel? Does it operate on the same principle? As far as feeding the material is concerned?

A. As far as feeding the material is concerned, it is quite similar.

Q. 480. That is a reciprocating feed of some sort?

A. Yes, I believe so.

Q. 481. Does it have the plate such as you have been talking about along which paint is fed?

A. Yes.

Q. 482. Wherein does it differ substantially from what was used at the Chicago Enamel Company? I might say what I am trying to do is to obtain some picture of what you actually installed, and if this is a fair approximation we will so identify it.

A. Fairly similar, but without these end plates. I don't believe that we used those end plates at Enamel Steel.

115 Q. 594. (By Mr. Meroni.) While we are talking about that subject, that brings up another point in your patent. In your 536 patent, you start right out in the first sentence and say this invention relates to a method and apparatus for electrostatically coating articles with a liquid coating material such as paint, lacquer, ink, wax and the like. Who gave the information to your attorneys that prepared this application that this invention related to coating materials such as these enumerated?

A. I think Starkey and I thought those materials would be applicable to the process.

Q. 595. Now, had you tried out all of those materials before you filed your application?

A. No.

Q. 596. What ones had you tried out?

116 A. Paint.

Q. 597. Well, do you know whether—

A. (Interposing.) And probably lacquer, paint and lacquer.

Q. 598. As a matter of fact, would it work with all forms of lacquer?

A. I never tried all forms of lacquer. It works all right with most lacquers.

Q. 599. Is that true of your No. 2 process? Have you ever tried any of them with ink?

A. Tried our process?

Q. 600. Yes.

A. I don't believe we have.

Q. 601. Ever tried it with wax?

A. I think I did try it with wax once.

Q. 602. Any recollection when?

A. Many years ago.

Q. 603. Well, from your knowledge and experience of this airless process, supposing you substituted wax for the paint on that paint brush in that initial experiment

which Mr. Starkey made. Would the liquid wax have been sprayed?

A. I don't know. It is according to the wax, prob-
117 ably.

Q. 604. When you tried it out with wax, did it work?

A. To some extent, not as good as paint.

Q. 605. But it did work?

A. Oh, some left the blade but not anywheres near as well as paint.

Q. 606. Were you aware of the fact that it was old to use an electrostatic field or force for spraying wax?

A. You said was I aware?

Q. 607. Yes.

A. No.

Mr. Hume: Your question is directed to the time he made this?

Mr. Meroni: I mean at the time that he evolved this improvement or claimed improvement prior to filing his application.

The Witness: No.

Q. 608. (By Mr. Meroni.) Have you since tried it out with wax?

A. Yes.

Q. 609. Have you tried it recently?

A. No. Wait a minute. It seems to me that one of our men may have tried it with wax recently.

118 Q. 610. With what result?

A. With intermediate results.

Q. 611. Well, did it atomize the wax?

A. It removed particles but not as fine as normal paint spray particles.

Q. 612. How fine do the particles have to be in order for them to be normal?

A. Well, I think, as I said earlier, I think the average

paint spray man knows that he is depositing the coating on an article when—

Q. 613. (Interposing.) Well, in your patent you spell out that when you talk about coating material you include wax. Now, who would know how fine the particles of wax have to be in order for them to be electrostatically sprayed properly?

A. I don't know. Probably be dependent upon the application, what they wanted to use it for.

• • • • • •

121 Q. 634. Based upon your experience and knowledge over these many years in connection with your airless process, you think it would work with tar?

A. I think of tar as what you put on the street but I wouldn't expect to use that in this process.

Q. 635. Would you say that your process was primarily for spraying paints?

A. Primarily, yes.

• • • • • •

134 Q. 707. It did vary?

A. Yes.

Q. 708. Well, did you actually vary it to see the effect of such variation on the electrostatic spray?

A. No. That was built into the pack so that it continually varied 60 times a second.

Q. 709. Well, did you in any way undertake in your work in connection with this airless spraying prior to the time you filed your application, to determine the upper and
135 lower limits of the high voltage that was necessary to accomplish the end result?

A. No, we didn't explore the entire range. We knew this range was adequate.

Q. 710. What range are you talkin about now?

A. Fifty to eighty thousand volts.

Q. 711. Did you find any voltages that were too low to secure atomization?

A. We didn't go down to low voltages.

Q. 712. Then I take it you did not at that time, prior to the filing of your application, determine the upper and lower limits of the high voltage that you would have to have to use for effective electrostatic atomization?

A. That is right.

• • • • •

159 Q. 802. And when was the first time you heard of the use of an electrostatic field for atomizing purposes? Either with air or otherwise?

A. Well, I have never heard. I think some of our early tests, it was noticed that atomization took place.

Q. 803. How far back would that be, roughly?

A. Approximately 1938.

Q. 804. What did you observe that time? Can you recall anything specifically?

A. No.

Q. 805. You went to a technical high school, did you not?

A. Yes.

Q. 806. Did you study physics at the high school?

A. No, did not have physics at the high school.

Q. 807. Did you take any courses in electricity at the high school?

A. No.

• • • • •

162 Mr. Meroni: Now, I would like to refer to the interrogatories that your company propounded to the Binks Company. Do you have them before you?

Mr. Hume: We will have them in just a minute.

(The documents in question were handed to the deponent.)

A. Yes.

Q. 821. Did you have anything to do with the preparation of those interrogatories?

A. I knew that some interrogatories were being prepared.

163 Q. 822. Let's put it this way: did your Counsel discuss with you the technical subject matter involved in the interrogatories?

A. I believe these were formed in my absence.

Q. 823. Did they check them with you before they released them?

A. I think I read them.

Q. 824. Referring to interrogatory 2-C, which reads as follows: "What was the potential employed between the article and unatomized liquid coating material at the emitter in each such case?" Why is that of any moment?

A. Well, if they used 100 volts, why it would be quite different than if they used a number of kilovolts.

Q. 825. Would you say that it would be, or would have been necessary to have at least used some kilovolts before the subject would have been pertinent?

A. I never think of it as an electrostatic field unless there are several thousand volts.

Q. 826. Well, actually using your airless type of electrostatic spraying, would you get any atomization at all at 100 volts?

164 A. Well, let's see. I don't think the process would work at 100 volts, at all.

Q. 827. Would you get any atomization at all at say 1,000 volts?

A. I don't know if I have ever tried a thousand volts.

Q. 828. What is the lowest voltage you have ever used or seen used during the operation of your airless No. 2 system?

A. I don't recall but I think we answered on the inter-

rogatory that somebody in the company used 20,000 volts, but that could be verified.

Q. 829. Well, in your answer to our interrogatory No. 21, you said, "Defendant has electrostatically atomized conventional liquid coating materials commercially at a voltage as low as approximately 20,000 volts." Is that what you allude to?

A. Yes.

Q. 830. Have you ever seen the No. 2 system operated at any lower voltage than 20,000 volts?

A. Not that I know of.

Q. 831. And in answering 22-A Ransburg said, "Defendant's electrostatic coating process, using compressed air spray guns have been operated commercially at a 165 voltage as high as aproximately 90,000 volts." Is that correct?

A. Yes.

Q. 832. And how high has the voltage been as far as your observation is concerned in the case of the airless or No. 2 system?

A. Was there an interrogatory on that?

Q. 833. I don't recall that there was. There may have been.

Mr. Hume: Are you asking this question within the knowledge of this witness or something speculative or on an experimental basis?

Mr. Meroni: I asked him what he observed. I believe the question included that.

A. Observing it, I don't think I would necessarily know the voltage being employed. I am not certain just how high our company has gone in experimental work on voltage.

Q. 834. Well, commercially, how high have you gone?

A. Well, we have packs rated at 110 kilovolts and the actual voltage might be somewhat under that.

Q. 835. Well, does the actual voltage depend upon the spacing between the applicator and emitter and the 166 object being coated?

A. We usually correlate the two.

Q. 836. Well, doesn't there have to be a definite relationship of space and voltage in order for you to get satisfactory commercial atomization in the electrostatic field without the use of air?

A. You mean to obtain the results that complete the process effectively, there should be a range correlating the two or a range within which both spacing and voltage should exist?

Q. 837. Yes.

A. That is right.

Q. 838. Now, in the interrogatory No. 2-D that you propounded to Binks, Ransburg said, "Was such potential substantially unidirectional in each case, or if not, in which such cases?" Wherein is it important that the potential be unidirectional?

A. Well, DC current is to be desired.

Q. 839. Have you ever licensed or sold a customer a license with equipment wherein anything but DC was used?

A. Not to my knowledge. DC would always be used.

Q. 840. By DC do you also include a pulsating type?

167 A. Yes, a pulsating DC.

Q. 841. In your Interrogatory 2-E, you inquired what was the spacing between the emitter and the article in relation to each voltage specified in answer to portion C of this interrogatory where such potential was substantially unidirectional. Was spacing there important from the standpoint of it falling within the range?

A. You could operate it at too close a spacing.

Q. 842. You could also operate at too far a spacing?

A. In relation to a given voltage in order to work effectively.

Q. 843. Now, Ransburg, in Interrgoatory 3-A, inquired, "Was the paint or other liquid coating material force fed at a controlled substantially uniform rate to the slot of the disk emitter?" Wherein is that of any moment?

A. Well, to get a good spray painting operation you want to feed the liquid at a controlled rate.

Q. 844. You mean it must not get to the atomizing edge of the emitter or applicator too slow or too fast, is that right?

A. No. You wouldn't want to shut it off and then
168 gush it out at a fire hydrant rate.

Q. 845. If it gushed out faster than it could be atomized it wouldn't be any good, would it?

A. That is right.

• • • • •

169 Q. 853. And I have here a letter dated October 4, 1955 written by Mr. Hughes to the Body Brothers Paint Company in Bedford, Ohio, wherein he states, "We received the five gallons of your D-131 aluminum undercoater and have ran some atomization tests
170 here last Saturday to determine how well this material atomized. I am sorry to report we had very little if any luck." Do you have any familiarity with that? It is a letter that came from your files.

A. I don't believe I have ever seen the letter before or heard of that specific case. I don't believe I have ever heard of Body Brothers Paint Company before.

Q. 854. I have another letter here written by one of your salesmen, Mr. Maxwell, to the All Steel Company dated September 22, 1950, wherein he stated he ran three paint samples which would have a globby appearance when applied to panels. He said the results were poor. "Atomization was poor and globby appearance showed on all panels." You have any knowldege of that?

A. I don't have any knowledge of that letter or those specific tests.

Q. 855. Indicates that your salesman was having some difficulty with that paint, doesn't it?

A. Yes. It is according to what the paint was supposed to do.

171 Q. 856. Well, you wouldn't say then that your No. 2 system can satisfactorily handle all types of paint?

A. Not every conceivable paint that a company could make. Here I would gather from the letter they were attempting to make a test on non-conductive metallic paints. They may have tried some freak formula or very unusual formulas.

Q. 857. You wouldn't say your No. 2 system would spray all types of metallic paints, too, either, would you?

A. Yes, I think it can spray all types of metallic paints.

Q. 858. And give a satisfactory coating as to all metallic paints?

A. It is according to what the customer would want.

Q. 859. Well, have there been any paint jobs which you have indicated to customers you could not handle?

A. Well, some customers want an orange peel and some customers want a smooth finish.

Q. 860. What is an orange peel, may I ask?

A. It is referred to because it has some similarity to a peeling on an orange but it is less pronounced.

Q. 861. Sort of pebbled?

172 A. Slightly rough, not perfectly smooth.

Q. 862. Are you aware of the fact that Mr. Miller had some experience in connection with General Electric work with regard to applying carbon black materials to the inside surfaces of television tubes?

A. I believe very vaguely.

Q. 863. I have a memorandum here from your files signed by Mr. Miller, dated June 30, 1950, wherein, among

other things, it says; "E. M.'s reasoning as to why our processes would not work satisfactorily for this particular application * * *" and I hand you that memorandum and ask you if you know anything about the subject.

A. I am not very educated on the subject. My understanding is that the coating of the inside of a television tube is a very meticulous coating operation.

Q. 864. Have you been able to successfully do it with your No. 2 system?

A. I don't know we have successfully done it.

Q. 865. I hand you another letter written under date of May 21, 1954, written by Maxwell to the GE Company
173 wherein he says, "We regret to advise our equipment would not be applicable to the application of coating a glass enamel with a black electrically conducting paint." Do you recognize that as an official letter coming from your files?

A. Yes.

Q. 866. No question but what you did so advise General Electric?

A. John Maxwell so wrote them.

Q. 867. And he is your salesman?

A. Yes.

Q. 868. I hand you another letter written by Mr. Miller to the GE Company, General Electric Company, relative to whether or not your processes could be used for applying a coat of adhesive to precured paper base phenolic materials. Do you know anything about that subject?

A. Do I have any knowledge of what?

Q. 869. Of the subject of that letter.

A. No.

Q. 870. You know whether or not you did work it out for General Electric to use your spraying equipment in conjunction with applying a coat of adhesive
174 to pre-cured paper base phenolic materials?

A. No, I do not.

Q. 871. You know whether it can be used, whether your No. 2 system can be used for that purpose?

A. Not with the information at hand.

Q. 872. I have here what purports to be another letter written to the Ford Motor Company in Canada dated May of 1953 by your brother Harold P. Ransburg, wherein on page two it states, "The No. 2 process does not lend itself to heated paint in that the atomizing bells tend to cool the paint before it reaches the edge from which it is atomized." Is that a correct statement?

A. It is correct insofar as the No. 2 processes, as he was contemplating it, was going to be used with an atomizing bell.

Q. 873. Well, is heat a factor?

A. It is a factor of viscosity.

Q. 874. And it has to be taken into consideration, doesn't it?

A. What do you mean has to be taken into consideration?

Q. 875. Well, your No. 2 system couldn't be used successfuly to commercially handle all types of heated 175 coating materials, could it?

A. I don't know.

Q. 876. From that statement made by Mr. Ransburg in that letter, that is your brother, it would appear that there is one material there that your No. 2 system couldn't handle, a heated material, isn't that right?

A. I think he was visualizing using the process, and conjectured that the paint would cool by the time it got to the edge of the bell.

Q. 877. Yes, but you were feeding a heated material to the edge of the bell, were you not?

A. I don't believe we were doing anything. I think he says the No. 2 process does not lend itself to heated

paint in that the atomizing bells tend to cool the paint before it reaches the edge where it is atomized and there evidently he is concerned considering the atomizing bells.

Q. 878. In other words, as far as the atomizing bell type system is concerned, you couldn't commercially use it with that heated paint because the paint would cool too fast, is that right?

A. You say as far as being commercially used?

176 Q. 879. The atomizing bell is concerned, yes. That is what he is talking about, isn't it, the No. 2 system?

A. Yes. If the bell is at room temperature and the paint is at an elevated temperature it would cool some flowing to the point of atomization.

Q. 880. That might be a serious factor?

A. Could be, I would imagine.

Q. 881. I have here another letter dated March 4, 1952 from the General Electric Company asking for information on the application of your electrostatic spraying method for coating irregularly shaped pieces of stainless steel with high temperature coatings, and I have here the reply dated March 20, signed by Mr. Stone, in which he says, "We do not feel that our present equipment would be entirely satisfactory for such an application at this time. If at a later date we do feel we have something to offer for such an application we shall look forward with pleasure to contacting you at that time." Have you ever developed anything to meet that requirement of the General Electric Company?

177 A. We at one time, I believe made a heated bell but we never installed any commercially. Is that what you mean?

Q. 882. Well, have you been able to furnish General Electric since Mr. Stone wrote that letter with any spraying system that would perform the job they wanted?

A. I am not certain what they are wanting here.

Q. 883. Well, do you disagree with what Mr. Stone said? Was that Mr. Stone who wrote that?

A. Yes.

Q. 884. You disagree with his statement?

A. No, I don't disagree with his statement, no.

Q. 885. I have here another letter dated October 3, 1955, written to the Acme Electric Corporation in Cuba, New York, by Mr. Maxwell. He is also a salesman, is he not?

A. Yes.

Q. 886. And on page two he says, "For your general information, we have not been able to successfully produce a good hammer pattern with the No. 2 process." By "hammer" do you mean this orange peel effect?

A. No, by "hammer" is meant metallic finish that 178 would look like metal hammered or pinged by a hammer.

Q. 887. And then he goes on to say, "We have some customers using the No. 2 process in conjunction with hammertone paints and are satisfied with the results although in our opinion they could not be considered perfect. The No. 1 process is used throughout the country for applying hammertone paints and we would not anticipate any difficulty whatsoever." Is that in accord with your understanding of the situation? I read from the top of page two.

A. Now, may I hear the question, please?

(The reporter read the last question as follows: "And then he goes on to say, 'We have some customers using the No. 2 process in conjunction with hammertone paints and are satisfied with the results although in our opinion they could not be considered perfect. The No. 1 process is used throughout the country for applying hammertone paints and we would not anticipate any difficulty whatsoever.' Is that in accord with your understanding of the situation? I read from the top of page two.")

A. I think he is referring to the fact that the customers are satisfied with the results obtained in using the No. 2 process in conjunction with hammertone.

179 Q. 888. But you thought you could do a better job with the No. 1 system than the N. 2?

A. I think so.

Q. 889. Well, in other words, in some jobs the No. 1 system is more suitable than the No. 2, isn't that a fair statement? And vice-versa?

A. Yes.

Q. 890. You wouldn't be selling both systems if the No. 2 system could do all the jobs, would you?

A. I wouldn't.

Q. 891. Now, we have here another memorandum written by Mr. Darrell Creps, a distributor. Is he a distributor for your company?

A. Yes.

Q. 892. Located in Toledo?

A. Cleveland.

Q. 893. This is on one of his service calls to the A. P. Parts Corporation. He said, "Mr. R. D. Lamb asked about the No. 2 process and after our discussion it was decided that they spray too much of a variety of shapes and sizes to make the No. 2 applicable. He understands the situation and is very proud of his present op-

180 eration." Doesn't that also lend support to the fact that the No. 2 system lends itself better in some jobs than the No. 1, and the No. 1 lends itself better in some instances for other jobs?

A. At the time of that letter, I presume so.

Q. 894. Isn't it a fact, isn't that also a fact now? You are still selling both systems, aren't you?

A. Yes.

Mr. Meroni: I would like to have this group of letters marked for purposes of identification as exhibits.

Q. 895. Do you have something else to say, Mr. Ransburg? I didn't mean to cut you off.

A. You said isn't it a fact we are selling both systems?

Q. 896. Yes.

A. Yes.

Mr. Meroni: Letter dated December 22, 1953, FF-1, addressed to All Steel.

FF-2, report re General Electric dated June 30, 1953, signed by E. P. Miller.

FF-3, letter by Mr. Maxwell to General Electric dated May 21, 1954.

181 FF-4, letter dated May 8, 1953 to the Ford Motor Company of Canada, written by Harold P. Ransburg.

FF-5, letter dated March 20, 1952 from R. H. Stone to the General Electric Company and FF-6, letter dated March 4, 1952 from General Electric Company to Ransburg.

FF-7, a three-page letter to Acme Electric Corporation dated October 3, 1955 from Maxwell.

FF-8, inter-office communication from Mr. Creps dated August 20, 1951 relative to A. P. Parts Corporation.

And here is one more, a letter dated October 4, 1955 from Mr. Hughes to the Body Brothers Paint Company, and this will be FF-9.

There is one more, the letter dated July 28, 1954 by E. P. Miller to the General Electric Company, as FF-10.

* * * * *

202 Q. 924. Well, I hand you a group of letters, Z-1 to Z-7 inclusive, all of which were apparently signed by you, and ask you if that will help your recollection.

A. That is what I was referring to. If you would have handed it to me earlier, I would have answered more definitely. This letter to Ainsworth dated May 27, Exhibit Z-1, I sent out.

Q. 925. Well, can you look at those quickly and say
203 if it isn't true that you sent them all out?

A. Yes, Exhibit Z-1, Z-2, Z-3, Z-4, Z-5, Z-6 and Z-7.

Q. 926. We selected those as being representative, inasmuch as you have many licensees. I presume you sent letters like that to all of your licensees?

A. Of a similar purport.

Q. 927. Now, does that refresh your recollection at all as to what was the occasion of sending out all of these letters back in 1953?

A. I did not need that material to assist in my recollection. We made a definite effort to send a letter of that type to every licensee.

• • • • • •

206 Q. 940. Have you any recollection of the time when you decided to circularize your licensees with letters like these that you have identified in Exhibit Z-1 to Z-7?

A. It was sometime not too much prior to then. We decided to send those letters out to all licensees.

Q. 941. You mean some time prior to May, early in 1953?

A. Yes.

Q. 942. Your brother Harold testified that to the best of his recollection no licensee elected to return the equipment pursuant to the circular letter. How does that jibe with your own recollection?

A. It jibes with my recollection.

• • • • • •

220 Q. 975. Mr. Ransburg, I hand you your Bulletin No. 100 entitled "Pricing Guide" dated May 27, 1953, comprising five sheets of paper, and ask you if that, under the heading No. 2, spray process, on page 2, pertains to the pricing of your so-called No. 2 airless electrostatic system.

A. Would you read that, please?

(The last question was read by the reporter as follows: "Mr. Ransburg, I hand you your Bulletin No. 100 entitled 'Pricing Guide' dated May 27, 1953, comprising five sheets of paper, and ask you if that, under the heading No. 2, spray process, on page 2, pertains to the pricing of your so-called No. 2 airless electrostatic system.")

A. On page two?

Q. 976. Yes.

A. Yes.

Q. 977. Now, I would like to ask you what is it your home office does to determine the monthly paint costs where it says here "Determined by home office"?

A. Well, it says monthly percent paint cost.

221 Q. 978. Yes. We would like to know what your home office does. Tell us everything your home office does in order to arrive at that.

A. We get the information on the type of articles we wish to coat, including dimensions, and then they are generally fitted into one of the charts, the last two pages of this bulletin, which determines per cent of the paint bill we want.

Q. 979. How do you fit them into one of the charts? Can you take an example?

A. This one marked "Pricing Chart No. 3, flat sheets for box-shaped articles having a maximum thickness of one inch," if the article has a maximum thickness of one inch, that is one dimension and the next dimension is 14 or more inches and the next dimension is 22 or more inches, and in that instance our price would generally be ten per cent of the cost of the coating materials sprayed for the monthly fee.

Q. 980. How do you arrive at the figure of ten per cent?

A. We just arbitrarily take ten per cent on that, be-

cause in the next article, which would be just a size
222 smaller, possibly similar dimensions, but smaller, in the second and third dimensions, we get a larger per cent of the paint bill on that.

Q. 981. Then you just arbitrarily set those percentages? You pick them out of the thin air, so to speak?

A. I didn't mean to imply that. We arbitrarily set them.

Q. 982. From what basis?

A. In relation to efficiencies of using coating material by competitive systems of electrostatic spray painting.

Q. 983. Aren't those percentages determined by first running the system yourself and ascertaining what the likelihood saving in paint could be under proper conditions?

A. We have run tests on each of this class of article.

Q. 984. I understand you have run tests but the point I am asking is, don't you first run these articles in an installation that you think should approximate the installation of it in the field, and base it on the paint saving that you think should be effected under as efficient an operation as you carry out?

A. No, we don't do that on every job.

Q. 985. You spot it and do it on some jobs, don't you?

223 A. If the article falls in a certain class, then the percentage applies to that class of article as would apply to that class of article.

• • • • •

230 Q. 999. (By Mr. Meroni.) I hand you what purports to be another bulletin dated August 5, 1952 entitled "Pricing Schedule, No. 2 Process." Can you identify it and if so, tell us what if anything you know about it?

A. This is a pricing schedule for the No. 2 process which contemplates our furnishing equipment to the customer.

Q. 1000. On which you retained title?

A. Yes.

Q. 1001. Proceed.

A. And this dealt with furnishing equipment and only dealt with that phase because we had no conception of anybody ever wanting the license without equipment at that time and no conception of requests from customers. We never had any such requests.

• • • • •

253 Q. 1081. Mr. Ransburg, in the answers to the interrogatories which you previously referred to in your examination there appears a series of some 40 odd forms of printed license.

A. Yes, sir.

Q. 1082. You have them before you?

A. Yes, sir.

Q. 1083. In no instance do I find in any of them any specific identification of particular patents. Can you tell me how it happened that your company decided as a matter of policy not to identify any patents or applications in its licenses?

A. I don't know if we decided one way or the other,
254 the way you put the question, but I believe on advice of Counsel we felt this was satisfactory.

Q. 1084. Are you aware of the fact that something like 170 licenses were granted on the airless system by your company before the Starkey 536 Patent in suit was issued?

A. I don't know the exact number but I am aware a substantial number of licenses on the No. 2 process were granted, prior to the issuance of the patent you refer to.

• • • • •

255 Q. 1087. I hand you a letter dated October 19, 1956 from Mr. Johnson to the Allegheny Ludlum Steel Company identified as Exhibit No. II-1 and ask you if that

is one instance where a licensee has asked you to tell it what patents you had on the No. 1 and No. 2 systems.

The Witness: Would you read that, please?

(The last question was read by the reporter as follows: "I hand you a letter dated October 19, 1956 from Mr. Johnson to the Allegheny Ludlum Steel Company identified as Exhibit No. II-1 and ask you if that is one instance where a licensee has asked you to tell it what patents you had on the No. 1 and No. 2 systems.")

A. Yes.

* * * * *

267 Q. 1124. As far as you know, would you say it is accurate to state that every licensee you have of the No. 2 airless type system uses either a bell or a rotating bell or a rotating disk as the applicator?

A. I believe so.

* * * * *

269 Q. 1132. Now, Mr. Ramsburg, I call your attention to the Starkey, et al. Patent, the 536 patent, Exhibit A, in suit, and ask you if any licensee of your company to whom equipment has been furnished by your company was ever furnished with an applicator or a head of the construction of any one of the several forms shown in this patent.

A. You mean identical to drawings in this patent?

Q. 1133. I am referring only to the applicator head 270 which is the device for delivering paint to the field. I mean the construction of the head. Has any licensee been provided by you with an applicator head such, for example as the v-shaped member 13, the member 113, the member 213 or the member 313?

A. Was your question whether or not we have supplied heads to licensees that are identical to those pictured in the drawing?

Q. 1134. Of the v-shaped section shown in those pictures that I have identified.

A. That are identical?

Q. 1135. Well, have you supplied any that are v-shaped?

A. Is your question now have we supplied any that are v-shaped?

Q. 1136. Applicator heads similar to or identical to those I have identified.

Mr. Hume: Do I understand your question did any licensee use that type of head under the license?

Mr. Meroni: First I am asking if he supplied any.

A. Any identical or similar to?

Q. 1137. I don't care whether they are identical or
271 not, but whether they were of a v-shaped cross-section.

A. Yes, we have supplied some heads that are v-shaped in cross-section.

Q. 1138. To whom were they supplied?

A. I believe our standard atomizing bells and disks, many of them employ a v-shape in cross-section.

Q. 1139. Let me put the question this way: as I understand it, the standard head is a rotating head. These heads are all stationary. Have you ever supplied any licensee with a stationary applicator head for use in your No. 2 system?

A. No, I believe the stationary applicator head is v-shaped in cross-section and a licensee used what was copied by the licensee from one he saw in our laboratory and made by him.

Q. 1140. Who was that?

A. Mr. Curtis Simmons.

Q. 1141. He used a solid v-shaped blade with a reciprocating supply, did he not?

A. Yes.

Q. 1142. He didn't use a hollow head in which he dis-

posed paint like you do in all of these forms of the Starkey Patent, did he?

272 A. The stationary head that he used was not hollow.

Q. 1143. With that one exception, haven't all your licensees been supplied with the rotating type of head, either in the form of a bell or a disk?

A. I believe that is correct. I feel quite certain it is correct.

Q. 1144. And even in the case of Mr. Simmons, he is no longer using the reciprocating type feed device but he is using one of your standard rotating head devices, isn't he?

A. He is using rotating disks, I believe.

Q. 1145. Now, I call your attention to the license forms that you have here before you. I believe your Counsel has a copy there and I particularly call your attention to the form 428 which has been numbered as D-23. I understand that that is the first printed form of license used on your No. 2 system, is that correct, sir?

A. If our Counsel so advises me I am sure it is.

Mr. Meroni: May we understand that is the first printed form?

Mr. Hume: That is our understanding.

Mr. Meroni: On the No. 2 system?

273 Mr. Hume: Yes.

Q. 1156. Now, referring to that form—strike that question—first let me ask you this: what part did you personally have to do with the making of changes which appear from time to time in the numerous license agreements typified by these forms which your company supplied in its answers to the interrogatories?

A. My role usually was in hearing the opinion of Counsel.

Q. 1157. By Counsel, do you mean both house counsel and outside attorneys?

A. Could be one or both or either one or both and after hearing what they might suggest, deciding whether or not their suggestion had sufficient merit to warrant changing the agreement.

Q. 1158. Did any of the other officers such as Mr. Harold Ransburg or Mr. Gregg Ransburg sit in on some of these changes that were discussed?

A. Some of them were discussed with the other officers but generally I would make the recommendation that the agreement be changed from what it had been to some new proposal and practically in every instance that recom-
274 mendation was followed. I cannot now think of any instances where the recommendation was not followed.

Q. 1159. These licenses were quite important to your company. They were the major source of revenue, were they not?

A. They are.

Q. 1160. Each time you made a change, did you make a recommendation to the other officers and was there a unanimity of approval before the change was finally put into effect?

A. I believe that most of these changes, I made them without even consulting the other officers.

Q. 1161. Did you ever have any disputes among yourselves as to any of these changes which Mr. Gregg Ransburg had to arbitrate?

A. Had a lot of disputes about making changes in which he has arbitrated and which Harper Ransburg has arbitrated also.

Q. 1162. Well, if it was some fundamental change I would assume, since these licenses were a major source of revenue of the company, that you didn't take the sole responsibility? You got their approval, did you not,
275 or attempted to?

A. As I said, I recall no instance when they did

not follow my recommendations and on the majority of these I did not even ask their views.

Q. 1163. Now, this form, as well as many of the other forms, contains the statement that, "Ransburg furnish certain special equipment." Did you presuppose before even the issuance of the license that the licensee would request the equipment?

A. In what instances?

Q. 1164. Any instance, where you got up the license form before it was ever offered to a licensee.

A. Yes, it was my supposition that the licensee would want us to furnish the equipment, want to require us to do so.

Q. 1165. Or rather, was the language adopted on the basis that your company did not want to grant any license unless it did furnish the equipment?

A. No, it was not adopted on that basis.

Q. 1166. You had no way of being sure when you drafted the form that every licensee was going to come in and say, "Furnish us with equipment or we won't take the license," did you?

276 A. No, I had no way of being sure of that other than what always happened previously.

Q. 1167. These forms of licenses that your company got up under your direction were not intended for any specific people? They were intended for general use, weren't they?

A. What do you mean?

Q. 1168. You didn't get them up with specific licensees in mind at the time you prepared the drafts, did you?

A. Of the form?

Q. 1169. Yes.

A. Well, they were prepared for what we considered

the average licensee and as you noted a little while ago, there were some typed forms from time to time, typed licenses.

330 Q. 1356. Now, referring to paragraph 11 having to do with future inventions in the same form, 428, it provides among other things for the granting of a royalty free, non-exclusive assignable license with the right to sublicense under any inventions or improvements with respect to coating apparatus and methods employing any such inventions. You are familiar with that provision, are you?

A. Yes, sir.

Q. 1357. Are you aware of the fact that this was the first form where that provision was included, and I mean by that the first printed form? I am not asking you to check all of them but I am asking you if you are aware of the fact that that was so.

A. I am certainly willing to take your word for it and will agree with you.

Q. 1358. The forms will speak for themselves but I am wondering if you had any particular knowledge as to
331 the inclusion of that paragraph 11 in the form 428.

A. I have knowledge of the fact that that was included in form 428.

Q. 1359. Now under this same provision, the user or the licensees are obligated to make the same transfer of license up to two years following the termination of the agreement. In those cases where agreements have been terminated with licensees, have you gone out and checked to see whether or not the licensees have complied with that provision?

A. No, sir.

Q. 1360. I mean by you, the company.

A. No, in no instance has that been done.

Q. 1361. Now, let's refer to form 430 which I believe is Exhibit D-25 in the answers to the interrogatories. You have that before you?

A. Yes, sir.

Q. 1362. Referring specifically to the same paragraph having to do with future inventions, which I believe there is No. 11, the form was, or the provision was broadened
332 to include subject matter usable in any way. The word "usable in any way", those words were inserted, which I do not think appeared in form 428 or in form 429.

A. Yes, sir.

Q. 1363. Do you have any recollection as to why you broadened it out? So as to include inventions usable in any way with the methods and apparatus for the electrostatic atomization of liquids or coating with electrostatically atomized liquids?

A. I believe that may have been because, or let me put it this way—I believe because we were finding it advantageous and desirable to improve fluid supply systems over and above any that we knew of previously and I presume that meant something such as that. I don't know, really.

Q. 1364. Now, as far as you know, with reference to these provisions having to do with the future inventions in these forms, have you ever had occasion to complain to any licensee for failure to live up to the provision?

A. No, sir.

Q. 1365. As far as you know, the licensee has lived up to the provisions?

333 A. As a matter of fact, the provision never amounted to anything either way.

Q. 1366. I am not asking you that. . . .

A. To my knowledge, no licensee ever made any development and the fact that you may have noted, why, it was only in the agreement for a relatively short period of time.

Q. 1367. Could it have been because there was no incentive for the licensees to make improvements?

A. I do not know. However, it is my opinion that the amount of improvements made by licensees under any of these printed forms either before future inventions were removed or after it was removed, has been exactly the same, which is zero.

Q. 1368. Have you gone out in the field and checked all 700 installations to see whether each and every licensee has made any improvements?

A. No.

Q. 1369. So that you are not basing your opinion upon an actual observation of what the licensees did?

A. No, but I feel sure if there had been much along those lines, why at least some of it would have come to our attention.

* * * * * *

6 PLAINTIFF'S EXHIBIT LLLL.

The deposition upon oral examination of HAROLD P. RANSBURG, a witness produced and sworn before me, E. Clifford Powell, a Notary Public of Marion County, State of Indiana. This deposition was taken on behalf of the plaintiff commencing at the hour of 9:30 o'clock, A. M., on September 17, 1957, at the Marott Hotel, Indianapolis, Marion County, Indiana.

* * * * * *

36 Q. 134. Were you aware of the fact that some of these prospective licensees on the airless type of license were objecting to turning over patents to your company?

A. Yes.

Q. 135. Tell us some of the companies that objected to that.

A. Well, I know that Hotpoint did and I think they were largely the larger companies.

Q. 136. You recall whether General Electric did?

A. I don't specifically recall it. I think that their objection was they were insisting on the terms that we gave Hotpoint.

Q. 137. Do you have any recollection of why after you had issued your first airless type of license agreement, which I showed you a moment ago, around April of
37 1951, you later changed the patent clause broadening it out?

A. Which is the patent clause?

Q. 138. Well, in this agreement D-23. It is paragraph 11 entitled "Future Inventions".

A. That was later broadened out to include something other than future inventions.

Q. 139. Later broadened out and still more recently I believe it was omitted in some agreements? I am trying to find out what you know about that, if anything.

A. Well, I know that initially we included it because we wanted some field experience during the final development stages and those who gained the initial advantage of it, we felt should give us their future inventions that came about through their use of the equipment or process.

Q. 140. Did Mr. Edwin Ransburg have anything to do with that?

A. Yes.

Q. 141. Who was it that first proposed it be included in the agreement? Was it Mr. Downer or Mr. Ransburg, or who?

A. I am not sure specifically. I would expect that
38 it was Ed.

Q. 142. Well, that was rather a radical change in the procedure over what you had done in the air type. Didn't you have conferences before you did that?

A. Yes, I am sure we did.

Q. 143. Can you recall anything that transpired in the conferences relative to the pros and cons on that proposition?

A. No. I know that we were all in favor of it initially. I don't think there were any arguments about it.

Q. 144. You say initially. Later on were some of you not in favor of it?

A. Yes.

Q. 145. Who?

A. I was one. I guess I was the major one.

Q. 146. Made the agreement much less palatable?

A. To particularly larger customers, yes.

Q. 147. Corporations do not like to assign their research to another in consideration of a license, do they?

A. We weren't considering this involving research, a research project.

Q. 148. Well, patents represent research, do they not?

39 A. Sometimes.

Q. 149. And to the extent that they do, you were obligating these companies that might take out patents on improvements emanating from research, to assign it to your company, is that correct?

A. If it emanated from research. We had in mind those things that would be developed through the normal course of usage.

Q. 150. By assign, I mean transfer a license or whatever is provided.

A. It is a non-exclusive license.

Q. 151. I didn't mean to say that they assigned the patent, but gave you a non-exclusive license. I believe you adhere to that in all of your forms, do you not?

A. Just on the No. 2 process.

Q. 152. However, you were to have the right to sublicense, were you not?

A. Yes.

Q. 153. Now, I gather from what you said it was your feeling or the feeling of your company, as expressed by its representatives who attended these conferences, that initially any licensees that had the advantage of the early developments of your No. 2 or airless system should assign, or rather give you a license as to improvements, isn't that correct?

A. You mean were they all in agreement?

Q. 154. Yes.

A. Yes, depending upon how far you go in the word "initial".

Q. 155. Well, as a matter of fact, aren't some of those licenses like D-23 still in force and effect?

A. I wouldn't know. I don't know any of the numbers.

Q. 156. I call your attention to a half dozen or so that I believe—

A. (Interposing.) You mean some still operating?

Q. 157. Yes.

A. Yes, I presume so. I don't know the form number of the agreement.

Q. 158. Well, it is D-23 and it is Form No. —you see the form number on there?

A. Yes.

Q. 159. What is that?

A. 428.

• • • • •

Q. 175. Well, on this equipment that you furnished to these licensees where you retained title in every case, did any licensee ever ship the equipment back to you and then continue the license?

A. I don't believe so, no.

Q. 76. Now, isn't it a fact that you circularized your licenses with letters of the order of this one dated July 15, 1953 to Acme Visible Records, Inc. of Crozet, Virginia?

(The document in question was handed to the witness.)

A. Yes.

Q. 177. And as I understand your previous answer, no licensee elected to take advantage of your offer and continue the license without the equipment?

A. I believe that is right, yes, sir.

Mr. Meroni: Let's mark this letter for purposes of
45 identification as Binks' Exhibit S.

(Binks' Exhibit S marked for identification.)

Q. 178. You are actively in charge of the granting of licenses and the furnishing of equipment on the so-called No. 2 airless system, are you not?

A. I would rather say I am actively in charge of sales.

Q. 179. Well, would you say that the principle phase of your business is selling customers on taking these licensees?

A. Yes.

Q. 180. And am I correct in my assumption that if they take a license with the equipment that they pay as much as $10,000 down for the equipment?

A. No, they didn't pay anything for the equipment. We call it an initial fee.

Q. 181. How much is that initial fee?

A. Could be $10,000.

Q. 182. Does it run more than that?

A. It can.

Q. 183. What is the average at this time?

A. Well, it would be, I would judge you mean of
46 all of our licenses or the No. 2 process?

Q. 184. The No. 2 process.

A. It would average between eight and ten thousand dollars, I would think.

Q. 185. Now, if the customer had taken advantage of your offer such as that expressed in this letter of July 15, 1953, would you have refunded that eight or ten thousand dollar down payment?

A. No. We don't call it a down payment.

Q. 186. You call it an initial payment?

A. Initial fee.

Q. 187. But they have to put that on the line before they get the license, don't they?

A. No.

Q. 188. They don't have to put it on the line?

A. They commit themselves to it.

* * * * *

51 Q. 222. According to the answers to the interrogatories given here by the Ransburg Company, there is no one in the field at the present time that manufac-
52 tures and sells to the trade an airless electrostatic system outside of your company, is that correct?

A. I believe that is correct.

Q. 223. As a matter of fact, since your first, or since you first commenced your work on this type of system, with the Enamel Sign Company in Chicago, down to the present time, have you run across anyone, any company at all or any person at all that has manufactured and supplied to the or through the trade any airless type electrostatic systems?

A. I don't know of any.

* * * * *

83 Q. 396. I hand you a series of eight, make that seven, letters allegedly written at different times by your company to customers and ask you if you can identify them.

A. Yes, I think I can identify them as letters we sent out.

Q. 397. What was the occasion of your sending out that type of a letter?

A. We wanted to be sure that all of our customers were aware of the fact that they could have a license from us without our supplying the equipment, if they wanted it.

Q. 398. Providing they would return the equipment that you had rented to them, is that right?

84 A. We didn't rent them any equipment.

Q. 399. Well, in your agreement with them you charged them monthly fees, did you not, for the equipment which you had title to?

A. Charged them monthly fees.

Q. 400. What would you call that if it isn't rent?

A. We call it monthly fees.

Q. 401. Well, if you rent a home, would you call that a monthly fee, too?

A. If I rented a home I think I would call it rent.

Q. 402. But you abhor the word "rent," is that right?

A. No.

Q. 403. In these seven cases the letter appears to be substantially identical with the exception of the amounts involved in some instances. No, I am mistaken about that. I believe they are all identical with the exception of the party to whom they are addressed and the identification in the agreement, is that right?

A. I think that is probably true, yes.

Q. 404. And when these letters were sent out, did you sincerely feel that any of these customers would forego their investment of some eight or ten thousand dol-

85 lars in equipment and return the equipment to you and just take the license?

A. I think your figures are wrong there.

Q. 405. Excuse me. I am basing it on what you told me as to what the initial fee was.

A. Well, in 1953 most of these customers would have

been using the No. 1 process and you are asking about the No. 2 process this morning.

Q. 406. Well, you were already selling, you were already selling licenses with the No. 2 process in 1953, were you not?

A. Yes. That is why I think the records will show whether these are No. 1 or No. 2 processes.

Q. 407. You wouldn't know offhand without consulting the records, as to whether or not they were No. 1 or No. 2?

A. I think I might recognize some of them.

Q. 408. You may look at them if you wish.

A. This Ainsworth is No. 1, I know. Alside is also No. 1 and Peninsular was No. 1 and I expect that perhaps all of these were No. 1. I say perhaps. That is purely guesswork. I think A. P. Parts might have been No. 1.

86 Q. 409. You don't mean to convey the impression these customers in the first instance don't pay substantial initial fee in order for them to receive the equipment from your company?

A. I would call it substantial, yes, sir.

Q. 410. And if they had returned the equipment to you as suggested in these letters, they would not have received a refund of that money, would they?

A. No.

Q. 411. Was this form of letter prepared by and with advice of Counsel?

A. I am sure it was.

Q. 412. Did you have any conferences with anybody in your company relative to the subject of this letter, and more specifically with regard to developing a record where it would appear that you were not forcing the customers to keep the equipment?

A. Can I rephrase the question my own way?

Q. 413. Yes, answer it in your own way.

A. I object to the word "appear," which makes it look

like window dressing because it has always been our policy to permit them to have that. This was an attempt to
87 make sure that everybody was aware of the policy.

Q. 414. Why were you so anxious to have them aware of it if they weren't aware of it in the first instance?

A. I think in the natural course of selling very often salesmen neglect to say some things that perhaps they should.

Q. 415. Now, isn't it a matter of fact that even in the case of your sales representatives you even advise them as to what forms of letters to use in writing the customers?

A. No, they didn't write any of those letters.

Q. 416. I mean, as to letters they did write?

A. No. If it was a form letter they wouldn't have anything to do with it. It would come out of Indianapolis.

Q. 417. Is it just strange coincidence that in almost every instance of a license, where a license was tendered, the salesman said, "We understand that you wish this type of agreement rather than one under which we do not furnish these additional items"?

A. Those are never signed by the salesmen.

Q. 418. Who are they signed by? This is signed by John E. Maxwell.

88 A. I retract that, then.

Q. 419. I have another one signed by Stone.

A. Those are the transmittal letters.

Q. 420. Is it strange coincidence they all use the same language?

A. This was a form.

Q. 421. That form language was by and with advice of Counsel too, was it not?

A. I feel sure it was.

Q. 422. As a matter of fact, in going through your files, in every instance where I found this form letter used, I

was not able to find a single instance where the customer indicated in writing in any way that he wished to have the equipment.

A. You mean the correspondence leads you to believe that they did not want the equipment?

Q. 423. I didn't say that. I said as far as the correspondence shows there is nothing in the correspondence to indicate that the customer solicited the equipment. You know of any instance where a customer in writing solicited the equipment?

A. The equipment alone?

Q. 424. Yes.

89 A. No.

Q. 425. Or any instance where the customer solicited both the license and the equipment?

A. You mean as specifying both the license and the equipment?

Q. 426. Yes. Do you know of any correspondence where a customer came in and said, "We want to have your equipment and we want also to have a license"?

A. No, but I think that would be tantamount to asking for a car without wheels on it.

Q. 427. I appreciate that is the way your program has been developed, but what I am trying to find out is if there is any record to substantiate that. You know of any record to substantiate that at present?

A. You mean of their asking for a license and equipment?

Q. 428. Yes.

A. The inquiries don't come or arrive in that form.

Q. 429. From the correspondence, it would appear that your salesmen made a call on the customer, sold him on the advantages of your process and then tendered this letter of transmission with the statement, "We under-

90 stand that you wish this type of agreement rather than

one under which we do not furnish these additional items." Is that a logical assumption?

A. Yes.

Mr. Meroni: I would like to identify the first group of letters as Exhibit Z-1, letter dated May 27, 1953, addressed to Ainsworth Manufacturing Company; Z-2, letter dated May 27, 1953, addressed to Air Maze Corporation; Z-3, letter dated May 27, 1953 to Alside, Incorporated. The next one to the A. & P. Parts Corporation, May 27, 1953; Acme Visible Records, Inc., May 27, 1953 and Algonquin Corporation May 27, 1953 and Peninsular Metal Products Corporation; and I want to correct a statement I made that these letters were dated differently. They are all dated as of the same date.

(Binks' Exhibits Z-1 through Z-7 inclusive marked for identification.)

Q. 430. (By Mr. Meroni.) Mr. Ransburg, that group of letters that I have just identified is typical of those
91 you circulated among your customers, is that right?

A. Yes.

Q. 431. And by that I mean customers that are both users of your No. 1 and No. 2 systems.

A. Yes.

Q. 432. Now, I have a slightly different form of letter dated July 15, 1953 but worded in substantially the same way, and ask you if that was a variation of the same form that was sent to customers.

(The document in question was handed to the witness.)

A. Yes, I presume so.

Q. 433. You recognize that as a copy of a letter taken from your company's files of one of your customers?

A. Yes.

Q. 434. I now hand you what purports to be a reply to that letter dated July 22, 1953 and your company's reply

thereto dated July 28, 1953 and ask you if you can identify those.

A. Yes.

Q. 435 That is correspondence of the Company, is it not?

A. I am sure it is, yes.

92 Q. 436. In this letter from the Altex Corporation, which you have just identified, addressed to your company, attention of E. M. Ransburg, Mr. Johnson, the President, says, "The letter proposes a change of contract no doubt to conform with precedent set up recently in the Patent Courts, but since the expression in your letter is over-simplified, we would appreciate your sending us a rough draft of the proposal you are making to others." Have you any idea what he meant by "precedent set up recently in the Patent Courts"?

A. I have no idea.

Q. 437. Did you have any discussions or any one in your company have discussions with Counsel as to what was meant by that?

A. I didn't have.

Q. 438. Now, the reply written by Mr. E. M. Ransburg makes no reference to that statement and I wonder whether it was decided, as a mater of company policy, to ignore it. Do you know?

A. I know as a matter of company policy we don't attempt to interpret legal things to customers.

Q. 439. Well, you have a house attorney that can 93 help you in that regard, can't he?

A. Yes.

Q. 440. I don't take it that you are a lawyer, are you, sir?

A. No, sir, I am not.

Mr. Meroni: I would like to mark for identification these three letters, one as AA dated July 15, 1953 addressed

to Altex Corporation; the reply from Altex Corporation dated July 22, 1953 and Ransburg's reply dated July 28, 1953, in the order that I have identified them.

(Binks' Exhibits AA-1, AA-2 and AA-3 marked for identification.)

Mr. Hume: What is the date of the Ransburg reply?

Mr. Meroni: July 28, 1953.

Q. 441. (By Mr. Meroni.) Now, I hand you three other letters, each of which contains that expression I quoted to you before, "We understand that you wish this type of agreement rather than one under which we do not furnish these additional items," and I ask you whether these
94 are letters that were sent out to your customers and also whether they involve a standard form that you used.

A. Yes, I presume these are.

Q. 442. The writer, Mr. Maxwell, is one of your salesmen?

A. Yes.

• • • • •

97 Q. 453. What I am trying to find out is how all of your salesmen were instructed to be sure to include in a letter this statement, "We understand that you wish this type of agreement rather than one under which we do not furnish these additional items."

A. I think that was no doubt oral instructions.

Q. 454. And I assume that was pursuant to a program your company adopted upon advice of Counsel?

A. I presume so.

Q. 455. In the light of a letter, say, of the example such as this one from the Altex Corporation dated July 22, 1953, would you say that there was never any concern on the part of your company relative to the question of whether your licensing program was in conformance with good law?

A. No, I don't think there was concern on our part.

Q. 456. I take it then that nobody ever in any way even alluded to or whispered to you that there might be some question about violation of the anti-trust laws?

A. I think the only one I can recall is shortly after the IBM situation a couple of years ago.

Q. 457. Well, I am not trying to find out what
98 Counsel told you, but I am trying to find out whether as a matter of fact there was concern on your part and whether you took it up with Counsel.

A. I think it was no doubt discussed.

Q. 458. As a matter of fact, you have had quite a few law firms over these past five or six years or so representing you, have you not?

A. Yes.

Q. 459. I believe we could say there is at least five different firms? Wouldn't you say so?

A. I believe so, yes.

Q. 460. In a licensing program as extensive as that pursued by your company involving over 700 licensees, is it a fair assumption that you consulted repeatedly with Counsel in connection with that program?

A. Yes, I am sure we did, at any time there was any alteration in the agreement or any change.

Q. 461. I believe the record shows that there was something like 40 or so different changes? Do you so understand?

A. It seems like at least that many.

Q. 462. In addition to outside counsel, I understand you had at least two lawyers working for you at the
99 Company, Mr. Downer and Mr. Johnson, is that right?

A. Yes.

Q. 463. How long has Mr. Johnson worked for you?

A. I would guess four or five years.

Q. 464. Have they had as part of their duties in your

employment the assignment of also keeping you appraised of interpretations of the anti-trust laws as they were handed down by the courts from time to time during the last five years?

A. I don't believe either of them is relied upon as authorities.

Q. 465. You have gone to outside counsel for advice principally in that respect?

A. I am sure we have.

Q. 466. But they were available if you wanted some quick advice, is that right?

A. Yes.

Q. 467. During the noon hour, in addition to picking out this letter, Exhibit BB-5, which you previously referred to as being the one having the ink change, from the Western Tool & Stamping Company file, I also picked out five other pieces of correspondence and I ask you if you can identify those letters as being part of the official records of the company.

A. Yes, I believe they are.

Q. 468. Would you examine them again and state whether they are a typical type, whether they embrace a typical type of correspondence between yourself and a licensee?

A. You want me to answer that as a group?

Q. 469. Do it whichever way you want it, whichever way you believe is best from the standpoint of your answer.

A. The question, I guess, refers to our correspondence, doesn't it?

Q. 470. Well, answer it as to your correspondence first and if you can state whether the type of letters you got from this particular licensee is of the same general order as you got from other licensees.

A. Yes, I would say they are generally typical.

Q. 471. I notice in the letter there spelling out

the terms, the initial fee is stated. What is the amount of that fee there? Is it eighty some odd hundred 101 dollars?

A. $8,600.

Q. 472. That falls within the eight to ten thousand dollar range that you testified about this morning?

A. I didn't mean that would be the range. I meant that would be the average. The average would fall within that.

Q. 473. This falls within the average?

A. Yes.

Q. 474. Now, as I understand it, if this particular customer, in response to a letter such as V-1, was to decide to return the equipment to you and continue with the license, that the customer would lose the initial fee of $8,600?

A. When you say "lose," you mean he would not have it refunded?

Q. 475. Yes.

A. No, he would not have it refunded.

Q. 476. I also understand from the answers to the interrogatories that the fee that you initially charged fully embraced all of your cost of the equipment that was furnished, is that correct?

A. Yes.

102 Q. 477. Did that fee, as a general rule, also represent a profit to the corporation in addition to its cost on the equipment that it made?

A. You mean—it did not represent a profit to the company.

Q. 478. In other words, was the fee based solely on your cost or did it involve other factors such as overhead and share of expense for research and development?

A. No, it is based on the cost of equipment.

Q. 479. Just the actual shop cost of the equipment without any over-ride?

A. The fee is based on that. It is not that actual cost.

Q. 480. It includes more than the actual cost?

A. Yes.

Q. 481. What does it include over and above the cost?

A. We never attempted to itemize what it includes and have never billed it in that way.

Q. 482. How do you arrive at that figure?

A. We arrive at it by a formula that we worked out, based on the cost of the equipment.

Q. 483. Does that formula make a certain allocation 103 for overhead?

A. No, it doesn't allocate anything.

Q. 484. Well, can you tell us roughly what the formula is and how you arrive at the cost?

A. We arrived at the cost of the equipment by studies from Ernst & Ernst.

Q. 485. I expressed that erroneously. I mean how you arrived at the figure you quoted the client as the initial fee.

A. Well, we have a standard amount for each item that is supplied and we have a sheet that the salesman runs down and supplies that quantity of item and extends it and totals it to arrive at the initial fee.

Q. 486. That initial fee represents your cost plus something else?

A. Well, it is based on the cost and it is more than the cost.

6 PLAINTIFF'S EXHIBIT MMMM.

The deposition upon oral examination of EMERY P. MILLER, a witness produced and sworn before me, E. Clifford Powell, a Notary Public of Marion County, State of Indiana. This deposition was taken on behalf of the plaintiff commencing at the hour of 2:30 o'clock, P. M., on September 18, 1957, at the Marott Hotel, Indianapolis, Marion County, Indiana.

* * * * *

18 Q. 68. Now, Mr. Miller, you have made reference to a book. I have been handed one by Ransburg's Counsel and ask you if you can identify it and if so, tell us what it is.

A. Yes, this is a book which I kept at the Ransburg Company in 1943.

Q. 69. May I refer to it a moment, sir?

19 A. Yes.

Q. 70. Excuse me.

A. Surely.

Q. 71. There is an entry on the back of the front cover, "Research and Development Record, Electric Coating Division, Harper J. Ransburg Company, Indianapolis, Indiana." Is that in your handwriting?

A. That is my lettering, yes, sir.

Q. 72. How did you happen to keep that record?

A. I came to the Ransburg organization for the purpose of directing their original research and development and as such, I kept a book of this type to record such ideas as were thought of by various members of the organization, to date them and to specifically make of record those ideas and thoughts or inventions that might have been made.

Q. 73. Did you do that on your own volition or were you instructed to do that by management?

A. This I do not recall specifically.

Q. 74. But in any event, you did keep such a record in the course of your duties?

A. That is correct, sir.

Q. 75. Now, Dr. Miller, you said this book would refresh your recollection as to the date when you saw the paint brush. Can you refer to any entries that are of assistance in that regard, and if so, would you please do it?

A. Yes. The last entry on page four of this book dated 10/29/43.

Q. 76. Counsel has furnished me with a photostatic copy of that entry so you do not have to use the whole book, but we will assume you are referring to Exhibit V-1 when we talk about page four.

A. All right, sir.

Q. 77. Isn't there really two entries there under that date?

A. Yes, there is one entry numbered 10 and another one numbered 11.

Q. 78. Are both entries in your handwriting?

A. That is correct, sir.

Q. 79. Is everything in your handwriting with the exception of the initials AS?

A. That is also in my handwriting. Everything on that entry is in my handwriting.

Q. 80. And "EPM" of course is your initials?

A. That is correct.

Q. 81. Just so we don't misread your entries which are in longhand, I wonder if you would read it into the record.

A. "10/29/43, entry No. 10, Al Starkey suggested using the detearing action from the bottom of a brush as the atomizing agent to spray items passing under this arrangement. See figure."

Q. 82. And then there is a figure below that and you drew that figure, too?

A. That is correct.

Q. 83. And is there some nomenclature over to the left of the figure with an arrow?

A. That says, "Paint entering a pipe."

Q. 84. Now, over to the left there is some writing abbreviated, drawing 4307, is that right?

A. That is correct, sir.

Q. 85. That seems to be in a lighter—

A. (Interposing.) It is in red pencil on the original.

Q. 86. In the photostat it appears lighter.

A. That is correct, yes.

Q. 87. Is that in your handwriting?

A. That is right.

Q. 88. Did you apply that drawing 4307 on the date of the entry or at some other time?

A. At some other time.

Q. 89. You applied the red entry at some other time which also includes the number five?

A. That is correct, sir.

Q. 90. Now, over to the right of the illustration there appears to be the initials A. S. And you applied that?

A. That is correct.

Q. 91. Now, will you read the second entry below the illustration?

A. This is entry No. 11 and reads, "Some device for coating objects internally should be considered and worked out. Signed EPM."

Q. 92. Was that your thought or was that Mr. Starkey's thought?

A. That, I think, came about as a result of a discussion between the two of us; probably his extension of this idea that he had.

Q. 93. Getting to the paint brush for a moment, what

did Mr. Starkey specifically tell you he had done that occasioned you to make the entry?

A. Mr. Starkey had been working with others of our organization constructing an exhibit which we planned
23 to take to the metal show to actually illustrate the use of our electrostatic process now referred to as the No. 1 process. That exhibit comprised a platform and a voltage supply and grid system and a control for the voltage supply. A platform was made of wood and we were assembling it in the laboratory in preparation to trying it out before actually taking it to this demonstration.

Q. 94. And that power pack—

A. (Interposing.) It had a voltage and control panel, etc.

Q. 95. Now, may I ask how much voltage was it capable of creating?

A. That particular pack had an output of around 85,000 volts.

Q. 96. Do you remember that was a pack made by the Darling Company?

A. That was not.

Q. 97. That particular one was not?

A. No.

Q. 98. Do you know where it was made?

A. That particular pack was made in our own laboratory.

24 Q. 99. I didn't mean to interrupt you. Will you proceed with what Mr. Starkey told you relative to the paint brush that led to your making this entry?

A. Mr. Starkey came to my office and advised me that in the process of painting this platform he had observed that the brush that he was using actually could be used as a coating operation in connection with applying the coating material on the brush over onto the charged surface of the grid or onto the control panel itself.

Q. 100. Did he show you anything that he coated?

A. At that moment he did not show me anything he coated.

Q. 101. Did he show you something at a later time?

A. At a later—that he coated by this method, you mean?

Q. 102. Using the paint brush.

A. Yes, there was a later one that Al showed me that he had coated using the paint brush.

Q. 103. This is the piece of paper which he showed you?

A. This is the piece of paper which he showed me. I actually saw this.

Mr. Hume: The witness has identified Binks' Exhibit B.

25 Q. 104. You actually saw that being coated?

A. That is correct.

Q. 105. And was that at or about the time of this entry?

A. This is dated 11/5/43 as compared with the 10/29/43 of the entry that you refer to.

Q. 106. Tell us exactly what you saw or observed on 11/5/43 when that piece of paper was being coated from the paint brush.

A. The paint brush was actually dipped in the coating material and held over this sheet of paper and the potential created between the brush and the paper, and this section which is removed here, actually was the initial globs that dropped off the brush in advance of the application of the voltage, actually to the brush and when the voltage was applied. the coating material left the brush in the form of this fine spray and was collected on the sheet as shown here.

Q. 107. Now, was the sheet attached in some way to one electrode of the generator?

A. It was placed on one electrode of the generator.

Q. 108. Was that a plate?

A. In this particular case it was a plate, yes, sir.

26 Q. 109. And was there another electrode of that generator in some manner related to the brush?

A. That is correct, sir.

Q. 110. Was it attached to a metal part of the brush or something?

A. It was attached to the handle of the brush.

Q. 111. Was it a wooden handle?

A. Wooden handle, that is correct.

Q. 112. Wood is a conductor in such a field, is it not?

A. It could or cannot be, depending upon its moisture content.

Q. 113. In this particular case it was—

A. Apparently.

Q. 114. And you say that the voltage being generated was somewhere around or in the vicinity of 85,000 volts?

A. We had such packs available in the laboratory at the time. I am not certain that this particular sample was prepared with a voltage of that size, or one of the larger ones which could have gone to 100 kv.

Q. 115. In any event, the field that this paint brush was disposed in, and the paper was disposed in, was a high voltage electrostatic field?

27 A. That is correct.

Q. 116. Now, what did you observe with reference to the paint on the tips of the bristles of the brush, if anything?

A. I observed that it left there in a fine spray, almost an invisible spray as a matter of fact, and accumulated on the paper.

Q. 117. Did the paint leave the tips of the bristles or did it leave the supporting body of the bristles? I mean the shank that you use or the base that you usually mount the bristles in, which is sometimes metal, did the paint leave that or the tips of the bristles?

A. It left the tips of the bristles as opposed to the metal binder that confines the bristles at the top, that is correct.

Q. 118. Were you able to see a multitude of strings emanating from the bristles, or was it too fine?

A. It was evident that each bristle had become a source of such atomization.

Q. 119. And in your opinion, where did the atomization occur, in the field or at the tip of the bristles?

A. At the tip of the bristles, in my opinion.

28 Q. 120. Did you operate that experiment in a sufficiently dark area that you were able to see whether there was any corona discharge?

A. Not this particular experiment we did not.

Q. 121. In your opinion, was a corona discharge inherent at the voltage you were using?

A. In my opinion, I believe there would have been such a discharge there, yes.

Q. 122. Now, you read a moment ago this article of 1887 of the London, Edinburgh and Dublin Philosophical magazine where an experiment was performed by disposing a dish with wax in it in an electrostatic field, did you not?

A. Yes, I did.

Q. 123. Can you tell us from the standpoint of what you observed when you saw Exhibit B being coated, whether there were any differences between the paint emanating from the tips of the bristles and what you would expect from wax emanating from the edge of a saucer?

A. I have never actually carried out that experiment so I couldn't accurately describe what took place there in that case.

29 Q. 124. Well, in the brush, with bristles, you would necessarily have defined points at the tips of the bristles, wouldn't you?

A. That is correct.

Q. 125. And those points would be spaced the distances that separated the bristles, isn't that correct?

A. That is correct.

Q. 126. In any event, you considered that phenomena or experiment that you observed of sufficient moment to recall it at this time?

A. Referring to this time, you mean now?

Q. 127. Yes.

A. That is correct, yes.

Q. 128. And you considered Mr. Starkey's previous informing of you of this experiment that he had made to record it on December 29, 1953, or rather I should say October 29, 1943, is that correct?

A. That is correct.

Q. 129. I believe Mr. Edwin Ransburg stated that he had not participated in that paint brush experiment, wasn't present. Do you recall whether he was or not?

A. I do not believe that he was present.

Q. 130. Now, when you observed this piece of paper, Exhibit B, being electrostatically sprayed from a paint brush, did you have any idea as to what caused the spray to form?

A. It is rather difficult at this point to say what ideas I had in light of the knowledge which I have acquired since then.

Q. 131. It might have been somewhat influenced by it and you might still think it occurred at that time?

A. That is correct.

Q. 132. A lot of things have transpired since then?

A. Certainly have.

Q. 133. The notation or entry you made on October 29 refers to the brush as the atomizing agent and what I was trying to ascertain was whether you observed anything that bears on this word atomizing.

A. The entry that was made here at the time the word

"atomizing agent" was used, of course was given to me by Al Starkey to describe the phenomenon that he had observed and having worked in the field of paint, I am sure that Al used that term, "atomizing agent" synonymously with other types of coating agents which would be used
31 to break up paint that would be normal in the process being used for application of that paint to surfaces.

Q. 134. Would you say it was correct that you considered at the time you observed the experiment with Exhibit B that an atomizing action was occurring?

A. Definitely.

Q. 135. Where did that atomizing action occur?

A. It is extremely difficult to say where it occurred because the visual observations would not be too accurate, certainly, but it occurred. It left the fiber as a liquid and occurred on the paper as a finely atomized coating material, so I assume you have to assume it occurred at the end of the fiber.

Q. 136. You mean at the tips of the fiber bristles?

A. Since that was the last point it could be observed as a continuous liquid.

Q. 137. In the general area of what you might expect would be the corona discharge area?

A. That is correct.

Q. 138. Corona discharges, of course, were an old subject with you at that time, were they not?

A. That is correct.

32 Q. 139. That was a phenomenon that was well known at the time you attended the universities?

A. The phenomenon was well known but little understood.

Q. 140. Still little understood, isn't it?

A. That is correct.

Q. 141. There are many theories as to what transpires

but I don't believe there is any accurate accounting for it, is that right, as far as you know?

A. It depends on who you would like to believe in the field, I think.

Q. 142. Would you say that the paint that was delivered to this Exhibit B was atomized, dispersed and applied to the paper?

A. Definitely.

Q. 143. Was that all done as a function of the electrostatic action?

A. Yes.

Q. 144. Without any other means?

A. That is correct.

Q. 145. In other words, once you effected atomization—

A. (Interposing.) I might say that probably since the arrangement was such that this paper was below the
33 brush, there might have been a component of gravity involved but the phenomenon we are speaking of here basically occurred due to the electrostatic field.

Q. 146. So that if we say the paint was atomized, dispersed and deposited on the paper, it was all done as a result of the electrostatic atomizing action? There wasn't any other means employed?

A. It was done as the result of the application of the electrostatic field between the two elements, that is correct.

Q. 147. Now, below this, this first entry, 10, and to the right of your notation, drawing No. 4307, there appears to be an illustration. It is rather crude and I wonder if you could tell us what it was intended to portray.

A. It was intended to portray a trough or a conveyor into which coating material, indicated here as paint, was conducted by that pipe and when the trough or v-shaped device filled up, that coating material was led to the small elements which simulate bristles or extension of some kind at the bottom of the trough and the objects passing under

that are illustrated as being flat sheets on a conveyor,
34 or lines there indicating the passage of coating materials from the bristles to the sheet.

Q. 148. Would that to you, in the light of your previous experience with electrostatically spraying on the No. 1 system, signify to you that it was intended to be some field there?

A. The field certainly is not shown in this indication but that certainly conveyed to me that idea now and then, and at any time in between.

Q. 149. And where was it intended that one electrode should be connected?

A. One on the object and one to the trough or the element at the bottom of the trough.

Q. 150. And the thought was if you had a high voltage electrostatic field between those electrodes you would atomize, disperse and coat those pieces on that conveyor?

A. That is correct.

Q. 151. There is nothing indicated here that at that time you had in mind using any controlled rate of delivery of paint to the trough? Was there anything discussed at that time relative to that with Mr. Starkey?

35 A. No, I would imagine that that was not discussed specifically, although anybody acquainted with the art of coating will realize, I think, that you would have to have a controlled rate or otherwise you would build up too much coating or too little.

Q. 152. You would use rate control regulators on the No. 1 system sand have for years?

A. I had.

Q. 153. The company had?

A. People had controlled fluids, certainly, yes.

Q. 154. Common practice to use diaphragms and pumps and other means of that sort for that purpose, wasn't it?

A. To control delivery rate of fluid?

Q. 155. Yes.

A. Yes.

Q. 156. It was also common practice to use a high voltage pack in electro-static coating systems, since for example your No. 1 system, isn't that right?

A. I don't know whether you call it common knowledge but in the case of the No. 1 systems you had voltage packs involved.

Q. 157. They were high voltage packs?

36 A. Correct.

Q. 158. They were in use in the field, were they not?

A. That is correct.

Q. 159. And would you say that it was also known in the field, in connection with your own practices, that you could use a conveyor to convey articles into the No. 1 system?

A. That is correct, yes.

Q. 160. Then what if anything was considered by you and Mr. Starkey at tht time to be sufficiently new about the idea that would cause you to record it?

A. The concept of using electrostatic forces alone to atomize, disperse and deposit these materials.

Q. 161. Did you consider there was any novelty in having a trough for holding the paint?

A. Certainly not. The trough would not be novel.

* * * * * * *

42 Q. 187. I believe you made some reference, if I am not mistaken, to the word "detearing." Did that have anything to do with this device?

A. They were trying to coat this device by a detearing method.

Q. 188. You remember whether they used paint or shellac on it?

A. That I can't tell you.

Q. 189. What is a detearing method, as you understood it at the time of the device?

A. The detearing method, as the name implies, is the method of deglobing or detearing, as we coined the word, to illustrate the removal of tears or excess material from the articles which had been dipped or flow coated.

Q. 190. Sort of a reverse action from coating, isn't it?

A. Well, the object has already been coated, actu-
43 ally when you detear. It is dipped or flow coated and it is coated completely and you use only the detearing operation to remove that material which you don't want on there.

Q. 191. The surplus?

A. The surplus.

Q. 192. And you electrostatically throw the surplus, so to speak, to some other object to collect it?

A. Well, you throw it off the object to get rid of it. That is the basic thing. You can do detearing while whirling it, too, effectively.

Q. 193. But if you do it electrostatically, do you usually pull the excess material off electrostatically?

A. The object is usually carried on a conveyor that is grounded, as is one side of the voltage supply usually, and the object is passed over or in the vicinity so a field will be created, so that it will cause the liquid to leave.

Q. 194. The liquid which would leave would be transmitted to the other charged object?

A. It might fall off on the floor, depending upon the field. If the grid is like the edge of the table and has the object, as it approaches the grid the material will
44 leave it and drop off on the floor, possibly.

Q. 195. Have you ever seen them detearing where they would throw the excess paint or liquid onto a plate or something?

A. Throw it onto such a plate?

Q. 196. Yes.

A. Well, the field about the object is usually created between the object and an expanded metal grid, and if the grid happens to be in the road when the material comes off, it will get it.

Q. 197. If the grid is charged?

A. If the grid is charged and if the particles would be attracted to that rather than fall to some other object.

Q. 198. It would tend to coat the grid, in other words?

A. It would accumulate on there, certainly, that is right.

* * * * * *

66 Q. 306. Now, will you refer to the next entry in that sketchbook having to do with this so-called paint brush development?

A. The next entry is on the top of page 12 dated 3/23/44, numbered 32, and reads: "Al Starkey ran additional tests on the detearing atomizer to ascertain if new design would produce as good results and to determine particularly if the various types of atomizers would work on liquid wax."

67 Q. 307. Did you witness any of that work on wax? Or with wax?

A. I don't recall specifically that I did.

Q. 308. Do you know whether they ran any tests with wax, of your own knowledge?

A. I am sure they did run such tests but I don't recall that I observed any of them.

Q. 309. What kind of wax, beeswax?

A. I don't specifically know the type of wax that was used on these particular tests that are referred to here.

Q. 310. Do you remember whether the wax was liquid, at room temperature?

A. No, I think they had to heat it.

Q. 311. Could have been beeswax, couldn't it?

A. I presume so.

Q. 312. Who made this entry?

A. I made this entry.

Q. 313. And are those your initials?

A. Those are my initials.

Q. 314. From what you observed, during this development following the paint brush experiment, did it make any difference whether you used paint or wax or lacquer
68 in tests?

A. Some materials worked better and some worked worse than others.

Q. 315. They would all atomize to a certain extent, wouldn't they?

A. Yes.

• • • • •

98 Q. 468. Would you say that the No. 2 system is capable of handling all known types of liquids?

A. No.

Q. 469. In coating objects?

A. No.

Q. 470. Would you say it would be more accurate to say it only handles a small portion of all of the liquids that are available?

A. All of the liquids that are available certainly encompasses a very large field and I would say it handles
99 most of the coating materials, most of the materials which are used in coating processes in the industry.

• • • • • •

107 Q. 508. Now, Dr. Miller, did you have anything to do with the submission to the patent attorneys of any descriptive matter leading up to the preparation of the application for which this Ransburg Patent 009, Exhibit C, was issued?

A. Yes, I think I did.

Q. 509. Now, doesn't that patent show substantially the

same type of electrostatic applicator only with other electrodes added to it for setting up a secondary field?

A. As what?

Q. 510. As in, say figure three.

A. Your question, doesn't it show the same type of applicator. As what applicator?

Q. 511. As you wrote up for use in the preparation of Starkey Patent 536.

A. No, this applicator involves a continuous slot along the bottom of it.

Mr. Meroni: Would you please read the last question?

(The last question was read by the reporter as follows: "Now, doesn't that patent show substantially the same type of electrostatic applicator only with other electrodes added to it for setting up a secondary field?")

Q. 512. From the standpoint of the operating principle of it, isn't it the same? Doesn't it have the same type of operation with a supplemental or secondary field?

A. This is an electrostatic applicator head with additional electrodes extended on the end of it.

Q. 513. If you left out the end electrode, 330, and 329 in figure No. 3, would you get electrostatic atomization, dispersion and depositing of the paint or liquid on the object?

A. Yes.

Q. 514. Now, it is interesting to note that in this instance the spacing between the applicator and the article is spelled out as being in the neighborhood of 14 inches and the size of the feeding conduit, 12, is spelled out, as being in the nature of 3/16 OD and the voltage range is spelled out as being in the vicinity of 22 KV to 125 KV, but perchance do you know why in the case of this patent all of those factors were given and they were not given in the case of your description submitted for the

preparation of the application on patent No. 536, Exhibit A? You are free to look at this patent, sir.

A. I know that they are written by different attorneys. That might have something to do with it.

Q. 515. Did you, in the instance of the submission of any material to the attorney in the case of patent 2658009, spell out those factors to him?

A. No, but I think between 1944 and 1948 I had a much better appreciation of the requirements of the patent application than I had previously.

• • • • •

119 Q. 530. Dr. Miller, yesterday you identified your memorandum of December 10, 1943, Exhibit XX, as having been prepared for submission to the patent attorneys. Do you recall that memorandum?

A. Yes, sir.

Q. 531. You refer in that memorandum to an atomized spray. When is a spray atomized?

A. When it is broken up.

Q. 532. How fine does it have to be broken up in order to be said to be atomized?

A. I think in the connotation of the word in the trade, certainly the significance would be that any material that is broken up beyond a bucket state, you might say, would be considered to be atomized.

Q. 533. To what trade do you allude?

120 A. The painting art.

• • • • •

132 Q. 600. I believe yesterday you said that some of the deteared material would deposit on the grid in the 133 detearing process.

A. That is correct.

Q. 601. To that extent the grid was coated, wasn't it?

A. Over the area which the particles landed, yes.

• • • • •

138 Q. 628. (By Mr. Meroni.) Fundamentally, would you say it is true that the Ransburg No. 2 electrostatic
139 painting system differs from the No. 1 system in that it omits the use of compressed air in the electrostatic spraying action?

A. The processes are completely different. When you ask me to describe the fundamental difference, I would say that the lack or the fact that the No. 2 process does not use air is one of the fundamental differences.

• • • • •

154 Q. 696. Have you ever tried any device in the electrostatic field where you had two electrodes spaced from each other to set up a field similar to what you had in your No. 1 system, say of comparable area wherein you discharged a jet of liquid adjacent the high potential electrodes in the area of the corona discharge? Have you ever tried anything like that?

A. Yes.

Q. 697. With what result?

A. With the result that the material atomized off the device.

• • • • •

2 PLAINTIFF'S EXHIBIT NNNN.

DONALD C. HOWARTH, called as a witness in behalf of the Plaintiff herein, having been first duly sworn, was examined and testified as follows:

Direct Examination by Mr. Meroni.

Q. Please state your name.
A. Donald C. Howarth, H-o-w-a-r-t-h.
Q. Where do you reside, Mr. Howarth?
A. Indianapolis, Indiana.
Q. What is your post office address?
A. Rural Route 14, Box 704, Indianapolis 20.
Q. How old are you, sir?
A. I am forty-two.
Q. By whom are you at present employed?
A. By the Ransburg Electro-Coating Corporation.
Q. In what capacity?
A. Well, I am in charge of the installation and service and purchase and manufacture of equipment, the sales engineering laboratories, and drafting.
Q. How long have you been employed by that company?
A. Since January, 1948.

• • • • •

5 Q. Is it your understanding that the No. 2 process is an improvement in that it does not have to make use of any air?
A. Yes.
Q. Is it also your understanding that the No. 2 process has gradually supplanted the No. 1 system?
A. Yes. It hasn't completely supplanted it, but it's gradually doing that.
Q. Well, roughly to what extent would you say it has supplanted it at the present time?

A. Are you talking about new sales or what?

Q. Outstanding licenses.

A. Well, it would be a very rough guess on my part, but I would say somewhere in the neighborhood of twenty-five to thirty-five per cent of the outstanding licenses.

Q. You mean that only twenty-five per cent of the outstanding licenses are on the No. 2 systems or do you mean that only twenty-five per cent are on the No. 1 system?

A. No. I mean that twenty-five per cent of the existing No. 1 licenses at the time the No. 2 process came out, twenty-five to thirty-five per cent of those licenses, were replaced with the No. 2 process.

Q. Would you say that as much as seventy-five per cent of your outstanding licenses as of the present time are on the No. 2 system?

A. Well, probably. I would estimate probably seventy per cent.

• • • • •

Q. What is the organizational set-up of your company as far as the actual work in granting licenses is concerned? By that I mean what is the sales set-up.

A. Well, as I explained earlier, after you go through the process of determining the suitability of a process for the prospect's use and the time comes to send a license agreement out to the prospect, it is sent out with a form letter to the prospect. Then he signs it—that is, assuming he signs it—and then returns it to us, where it goes to the people who handle the legal phase of it; and then, assuming that it is satisfactory with them, we in turn sign it and return them their copies.

• • • • •

Q. Well, let's take a particular customer that your company is about to survey, or is in the process of making a survey on, with the view of ultimately licensing

that customer. Tell us just what is involved, what is done, if you can, in somewhat more detail than you did before.

A. Well, first of all, the salesmen will attempt to get him to send parts to our sales laboratory, production parts.

17 Q. Well, let's stop at that point. I am assuming that the salesman must have made a contact with the prospective licensee—

A. That's right.

Q. (Continuing.) —in order to obtain those parts.

A. That's right.

Q. He contacts the licensee or the prospective licensee and tells him about your equipment or what you have?

A. Yes.

Q. And then he suggests that parts be sent to your company so that you can demonstrate the efficacy of your systems?

A. Well, we wouldn't necessarily do that unless, after making a survey in his plant, it looked like he would use a sufficient amount of coating material and his production requirement was such that it would lend itself to the use of our process.

Q. Then the salesman must first make a survey in the prospective licensee's plant in order to determine whether or not it would be profitable to license that concern, is that right?

A. Well, we would either make it in his plant or have sufficient information from the customer so that we could establish that fact, yes.

18 Q. And then does he prepare some sort of a report to your company, telling you about this survey and why this customer might be a good prospect for a license?

A. Yes. As a matter of fact, he would send in what we call an engineering data sheet, which has certain information which we require in order to set up in the labora-

tory to run the job in accordance with the customer's requirements or the prospect's requirements.

Q. Do these engineering data sheets contain comparisons of what that customer is then doing with what you hope to do with your process?

A. Well, for the most part, they show what he is presently doing, giving adequate clearances such as oven clearances and washer clearances and the clearances he would have in the spray zone to have them where he was coating.

They would also show, for the most part, how much coating material he is using, the types of coating materials, the baking temperatures, the different types of parts, the quality requirements that the customer or prospect wants or needs to meet, and usually a summary of what he hopes to accomplish or what the prospect's main interest is, such as labor savings, better quality, a new coating system or material savings, that type of thing.

Q. Do any of these surveys take into consideration the use by the prospective customer of equipment other than your own equipment?

A. You mean equipment he might presently have?

Q. Or equipment that he might purchase elsewhere.

A. It may be mentioned, yes. I mean, in other words, he may mention that he is considering some other equipment or something of that sort or that he has other equipment in his plant at that time.

Q. Well, I don't think I got my thought across to you. I will phrase my question a little differently.

Do any of these engineering data sheets ever contemplate that the prospective licensee would purchase or acquire from a different source than your company airless electrostatic spraying equipment?

A. Of course, I don't see them all, but I would say that of the ones I have seen I haven't noticed anything to that effect.

Q. Well, as a matter of fact, do you know of any other company in the field, or anyone that was in the field prior to the filing of this suit in 1956, that was supplying any airless electrostatic spraying equipment?

A. No, I don't.

Q. Have you ever seen any engineering data sheets where the prospective customer was contemplating building its own equipment for doing that and only taking a license under the process patent?

A. No, I haven't.

Q. I would take it then from your answer that as far as the airless No. 2 system is concerned you know of no instance where your company granted a license and the licensee was permitted to use its own or someone else's airless electrostatic equipment.

A. That is right.

Q. Then the salesman submits an agreement or a license to the prospective licensee, including the license under patents and provisions for the furnishing of this equipment? Is that the procedure?

A. Well, I am not sure of the exact wording about the license under patents and so forth, but we submit the agreement on our standard agreement form.

Q. Well, that not only includes fees for the use of the process but also includes fees for the use of the equipment that is furnished?

A. That is correct.

Q. The fee for the equipment is called an initial fee, isn't it?

A. Well, the initial fee embraces more than just the equipment. The cost of the equipment is included in the initial fee or is covered in there.

Q. What else is included in the initial fee?

A. Well, specifically I can't tell because I don't know,

but I would assume that a lot of other costs are included in there.

26 Q. Well, the records bearing on that subject are in your custody and would show what the figures are, is that correct?

A. Well, I don't know that the initial fee, to the best of my knowledge, is not specifically broken down to cover such a percentage of this cost and that cost and so forth. I don't think there are any records of that nature; at least, none that I am aware of.

Q. Well, you have more or less of a standard initial fee, don't you?

A. Oh, yes, we do.

Q. And I believe in some cases it was $8,000, and while I don't know, my recollection is that it's $10,000 now. What is the fact?

A. Well, the initial fee depends on the installation and the amount of equipment supplied for the installation and it will vary anywhere for the No. 2 process from 7500 on up and it could be considerably above that amount for a given unit.

Q. What is the highest amount that you know of?

A. For a single unit I would estimate somewhere around fourteen or fifteen thousand dollars. That's for a single unit.

Q. And that is for the equipment owned by your company and furnished by your company under this agree-

27 ment?

A. Well, the equipment would be included in the initial fee.

Q. But it's your equipment?

A. Yes, that's correct.

Q. It's always your equipment?

A. Yes, that's right.

28 Q. According to this letter, you did, as a part of your duties then, send out license agreements to prospective licensees, is that correct?

A. Well, only in the event that I happened to work with a prospective licensee if he happened to some to Indian-
29 apolis or something of that sort. That is not normally my job. I am not normally in the sales department, although I work there occasionally.

Q. Well, you are acquainted then with the sales policies of your company?

A. Oh, yes.

Q. And the customers, the prospective customers for a license, come to the company and they are referred to you sometimes, you say Now, when?

A. Well, in the event that the salesman who would normally handle them would not be in Indianapolis or in the event it might be a special application or something of that sort that they weren't familiar with.

Q. Well, have you, in a number of instances, participated as the salesman in trying to interest the licensee?

A. Yes, yes, I have.

Q. Now, how did you become familiar with the sales policies of the company?

A. Oh, primarily through bulletins or oral information.

Q. Well, does the company have meetings with its salesmen?

A. Well, not very frequently. We have had, oh, probably not more than one or two that I can recall since
30 I have been there.

Q. Have you attended some of those meetings?

A. Yes, I have.

Q. So that, when you testified as to the procedure of the company in contacting prospective licensees and in working out eventually an ultimate license with them, you

were basing that upon actual experience that you have had in effecting some of these licenses?

A. Well, to this extent: That I wouldn't normally go out and contact or seek out a prospective licensee. About the only time I would handle such a licensee would be if it was referred to me by the sales department or if an existing customer, for example, might call me on a special problem for a new installation.

In other words, I wouldn't be in the sales department, since I would not go out and try to locate the prospective licensees in the field.

Q. But in order to carry on that work for the company you have to be as familiar with the sales policies and the terms of the licenses and agreements as the salesmen?

A. Oh, yes, that's right, yes. Yes, sir, that is correct.

31 Q. Now, in the case of this Grand Sheet Metal Products Company, do you recall whether Mr. Zadoff called on you?

A. I belive—and this is strictly recollection, but I believe—that he wished to visit Indianapolis in connection with additional equipment and the salesman who would normally handle him was not in Indianapolis at the time and I took care of him when he came there.

Q. I notice that this form letter, like all the others I have seen, contains this statement: "We understand that you wish this type of agreement rather than one under which we do not furnish these additional items."

Was that statement standard?

A. Yes, it was.

Q. Who laid down the policy that that should be included in every letter that was sent out transmitting an agreement?

A. Well, I don't know that any one individual laid it down. I assume that it came from our legal group.

Q. Well, you had to, in this instance, modify the form letter to fit in with the particular customer's requirements, did you not?

A. Well, I would have to look at the letter again to
32 see that.

Q. Yes.

A. I would say the only difference in the form letter would be the serial number of the agreement and the fact that it's TV and air conditioning cabinets. That in the first paragraph, I would think, would be the only difference.

Q. Aside from this statement about the understanding of the customer wishing this type of agreement, did you personally have any understanding with Grand Sheet Metal Products Company or Mr. Zadoff in that regard or was that just standard form?

A. I missed your question, I believe.

Q. Well, I mean, in this particular instance did you have an understanding with Grand Sheet Metal Products Company that this company wanted this type of agreement rather than one on which you did not furnish the equipment?

A. Yes, I understood they wanted our equipment.

Q. Who gave you that understanding, who expressed that to you?

A. Oh, I am sure it would be Grand Sheet Metal. Mr. Zadoff probably.

Q. Well, have you got anything in writing on that?

A No, I wouldn't say so. I mean, I wouldn't know.
33 There might be something in writing, I assume.

Q. You say you assume so. Are you just guessing because this was your standard practice or do you have specifically a recollection of discussing that with any particular person?

A. No. He came to us to get our equipment.

Q. Yes. But, did he express to you that he wanted this very type of agreement?

A. Oh, I don't know. I don't believe he expressed that opinion. I don't think he knew of the form of the agreement as such.

Q. Then the only reason that that was included in your letter was because it was the standard practice of your company to include such a provision in letters of transmittal to customers?

A. That's right.

* * * * * *

34 Q. How did you go about making the computations that appear on this price sheet?

A. Well, after running our tests and determining
35 what equipment was required to properly coat the TV cabinets, we, simply filled in the quantities and used the multipliers listed on the worksheet here to arrive at the total figure.

Q. How many units were involved?

A. This is one unit, one voltage pack.

Q. Who determined the unit prices that are printed on this sheet?

A. Oh, I think that those were determined partially by myself and partially by a Mr. Whisten based on our costs of manufacture and equipment.

Q. Did the figure include only costs or did they include anything for pr fit?

A. Those figures include cost, burden, and some profit as determined by a study made by Ernst & Ernst, accountants. In addition there is a lump over-all sum on top of it, over and above all that, so, that the figures, the total figures, represent more than the cost of the equipment by far. In other words, it is not just the equiment cost there.

Q. Well, could you state roughly how much more percentagewise would be represented in the figure that would

be over and above the cost? I don't mean to pin you down. If you can, give us some rough idea.

A. I would say—well, let's see. I would say over
36 cost, burden, and profit, all told it's probably a figure of two and a half times that, between two and two and a half times.

Q. That is, the fee that you would charge the customer or licensee for the equipment would be two and a half times the actual cost?

A. In that particular instance I would say it's probably two to two and a half times. Yes, very close to two and a half.

Q. What would you say would be the average for your No. 2 licenses where you furnished the equipment?

A. The average fee?

Q. The average multiplier. Would it be two and a half or would it be less or more?

A. Well, it would probably be in the neighborhood of two and a half.

Q. Now, there is one item here that says, "If reciprocating, add: For length of stroke 36 inches or less, $500; 36 inches to 60 inches, $1,000; over 60 inches, $1,500." What does that relate to?

A. Well, if a reciprocator is required by the user to do the job properly, on each reciprocator, depending on the stroke length as you have just read there, we add that additional amount to our initial fee.

37 Q. Was that added regardless of whether you supplied the reciprocator or not?

A. Yes. We don't supply the reciprocators.

Q. Does the customer or licensee know that you are charging him in that over-all lump figure for the reciprocator?

A. Yes, he generally does.

Q. How is he advised of that, by letter?

A. Well, sometimes by letter and sometimes orally

Q. I now hand you this form, sales bulletin 132, dated June 15, 1954, comprising two sheets, identified as Exhibit III-1, and ask you if you are familiar with that bulletin.

A. Yes, I am.

Q. That bulletin was issued in the June preceding the November when you had this correspondence with Mr. Zadoff?

A. Yes, I would say so, yes.

Q. Now, does that bulletin refresh your recollection as to what the practice of your company was as far as advising your clients or customers as to what went into these initial fees?

A. Well, my recollection on that hasn't changed. I would frequently show a customer the sheet exactly as it's written here.

38 Q. The last sentence of the bulletin—that is, the first page of it—says, "It is not contemplated that these reasons or any detailed breakdown of the initial fee should ever be given the customer."

A. Yes.

Q. Did you comply with that instruction?

A. Well, I would say not.

Q. How did it happen that you did not comply with the instruction?

A. Well, it's just a difference in selling technique, where some people would advise a customer maybe along these lines and others would not. Now, I think that most of our salesmen would tell the customer, for example, that if he is going to use a reciprocator with a 36-inch stroke or less the additional initial fee would be $500 and that if it's more than that it would be $1,000, and so forth.

Q. Well, do you have any letters in your custody wherein you have ever so advised a customer?

A. I can't recall of any offhand, but I expect there are some.

Q. Did you, in this particular instance, in your dealings with Mr. Zadoff, specifically advise him of this breakdown?

A. Well, I couldn't tell you whether I worked this
39 price out right in front of him or not. Frequently, I would.

Q. Well, in this particular instance you are not prepared to state then that you did show him the breakdown?

A. That is correct.

Q. So that, regardless of whether the licensee was advised or not, it was the policy of your company to charge the customer in the initial fee for the reciprocators whether they were furnished or not?

A. No, not to charge him for the reciprocator.

Q. What?

A. To charge him a fee for the use of the reciprocator. We didn't charge him for the reciprocator as such.

Q. You made a charge if he acquired the reciprocator elsewhere?

A. Right, but it had no relationship necessarily to the cost of the reciprocator as such.

Q. Your company was not equipped to furnish reciprocators?

A. No. We furnished a few reciprocators in the very beginning until outside suppliers were found who would be better equipped to manufacture and make the reciprocators.

40 Q. As I understand it, a reciprocator is something for reciprocating the emission head. Is that correct?

A. That is correct. That moves the disc and moves it up and down, vertically, or it can be laid sideways or horizontally, for that matter.

Q. So that the head can traverse the work?

A. That is correct.

Q. I now hand you this letter, Exhibit III-4, which I understand you wrote, dated November 3, 1954, to Mr. Zadoff, and ask you if you can identify it and, if so, to tell us anything you know about the subject.

A. This letter more or less summarizes the tests which were conducted during the visit of Mr. Zadoff and two others from his company to Indianapolis to witness our tests on TV cabinets and air conditioning cabinets.

It gives the mileage figures, showing how many cabinets we obtained per gallon of paint, the coating thickness from the standpoint of quality, and also enclosed with the letter were drawings showing the layout which we proposed they use for the installation.

Q. Does that refresh your recollection as to whether you saw the tests?

A. Oh, I saw most of the tests, I know. I wouldn't 41 be there all day necessarily, but I'm sure I saw most of the tests.

Q. Well, you saw Mr. Zadoff and the representatives?

A. Yes, I did.

Q. So that the letter was based on your own firsthand knowledge?

A. That's correct, yes.

Q. Now, on the first page of this letter you say, "Their price for a 36-inch remote control hydraulic reciprocator, which will allow the reciprocating stroke to be adjusted without stopping the conveyor line or the reciprocator, is approximately $1,600 f. o. b. Los Angeles."

Did you obtain that figure from the company you referred to, Lee Welding and Engineering Company?

A. Yes, I did.

Q. This letter makes no reference to your making a charge of $500 for this reciprocator to be purchased elsewhere, and now I would like to ask you if you know of

any other letter to Mr. Zadoff that you wrote where you made any reference to it.

A. I can't think of any. But this letter doesn't make any mention at all of the initial fee or any charges, as a matter of fact.

Q. This letter also makes reference to a Mr. M. F.
42 Pleva. Who is he?

A. He is our Chicago representative.

Q. Do you recall in this particular instance, of your own knowledge, whether Mr. Pleva made the initial contact or whether you did?

A. I don't recall.

Q. You did in this letter recommend that if there were any further questions that Mr. Zadoff should contact Mr. Pleva in Western Springs?

A. That's correct.

Q. Do you know whether he did?

A. No, I don't.

Q. Now, the other two men or representatives that visited your plant are Mr. Koranski and Mr. Jim Scavo?

A. That's correct.

Q. Do you recall those individuals?

A. Yes, I do.

Q. They accompanied Mr. Zadoff, did they?

A. They did.

Q. Did the Grand Sheet Metal Products Company take the tendered license?

A. Yes, they did.

Q. And did your initial charge, as far as you know, for the equipment include $500 on the reciprocating unit?
43 A. Yes.

Q. That would be $500 for each unit?

A. For each unit, that is correct.

By Mr. Hume: Mr. Meroni, just so the witness won't be misled, he has already stated in his testimony that no

charge was made for the reciprocating unit as such and this charge is based on the reciprocating unit.

Are you asking whether his charge was made contrary to his prior statement that he did not make it?

By Mr. Meroni: No. If there is any question about it I will get it straightened out with him.

Q. Did you understand my question to mean that the fee included an additional $500 because the customer was going to purchase outside a reciprocator?

A. That is my understanding, yes.

• • • • •

50 Q. I hand you what purports to be another bulletin, entitled Price Schedule No. 2 Process, which has been marked as Binks Exhibit OO, and ask you if you can identify it and, if so, to state when and where that bulletin first came to your attention.

A. I would say I saw the bulletin about the date of the bulletin, somewhere in that neighborhood.

Q. The date being August 5, 1952?

A. In that neighborhood, yes.

Q. You recognize it as an official bulletin of the
51 company that was sent out to your distributors?

A. Yes, indeed.

Q. By "distributors" who do you mean?

A. Well, at that time we had two distributors, one in Ohio and this outfit I mentioned on the West Coast, the Miller Brothers Company.

Q. Well, this was also sent to the salesmen though?

A. That's correct.

Q. Who is Mr. Miller?

A. He is one of the salesmen.

Q. Emery P. Miller?

A. That's right. He is one of the salesmen. Yes, that's right.

Q. Where is he located?

A. In Indianapolis.

Q. And what is his title?

A. I would say I don't know of any title he has other than "salesman" or "sales engineer."

Q. Would you say he is in charge of sales under Mr. Harold Ransburg?

A. No, I wouldn't.

Q. The man in charge of the sales then is Harold Ransburg?

A. That is correct.

Q. Now, you became familiar with this pricing 52 schedule when it was issued, did you not?

A. I would assume so.

Q. Now, this pricing schedule in every instance includes a power pack, doesn't it?

A. Yes, it does.

Q. And, as far as you know, did the company at that time furnish the sales people with any bulletin showing how they could price where the equipment wasn't to be furnished?

A. I believe at that time, and prior to this even, that all that pricing would be done at Indianapolis. The salesmen wouldn't have the information required to properly price them.

Q. There was no bulletin issued to salesmen showing how they should price them, it was contemplated that they refer any such inquiries to the management?

A. That is correct.

Q. Now, I call your attention to two bulletins, which I believe were sent out to your sales force at about the same time, one being dated May 27, '53, identified as Exhibit YY, and the other being Exhibit NN, a pricing guide bulletin 100 of the same date, and I ask you if you can identify them and, if so, to state whether you saw them when they came out or in or about the dates of them.

53 A. I would say I say these at about the dates of the bulletins.

Q. And were they sent out as part of your regular course of business, as far as you know?

A. Yes.

Q. Sent out to the sales people of your company?

A. As far as I know, yes.

Q. And for their use in the handling of the licensing of your company's equipment?

A. That is correct.

Q. Did you have anything to do with the preparation of either that bulletin or the pricing guide?

A. No.

Q. Do you know whether the pricing guide was arrived at as a result of meetings of personnel of the company?

A. No, I can't say as to that.

Q. You didn't participate?

A. No, I don't believe so.

Q. You received copies of those bulletins?

A. Yes, I did.

Q. And you used them in your work?

A. Yes, I do.

Q. Were you aware of the fact that that pricing guide, Exhibits NN, sets forth figures for licenses with and
54 without equipment in the case of the detearing process and in the case of the No. 1 process but sets out no separate pricing for the No. 2 process without equipment?

A. Yes.

Q. So as of that date the policy of the company was that if a situation should arise where a licensee would want a license without equipment, that would be a situation that would be referred to management, is that correct?

A. You mean as far as the No. 2 process is concerned?

Q. Yes.

A. Yes.

56 Q. I hand you what purports to be another guide, a pricing guide, for the No. 2 spray process, dated July 15, 1953, and ask you if you can identify it and, if so, to state when and where the guide first came to your attention. This has been marked as Binks Exhibit JJJ-2 for identification.

A. That came to my attention, oh, just about somewhere around the date of the guide, the pricing guide.

Q. That is another one of the official bulletins or instruction sheets issued by the company for use by the sales department?

A. That is correct.

Q. Do you know whether this was the first one that was issued showing the fees for the No. 2 system both
57 with and without equipment?

A. I would say that this was the first one showing the specific fees with or without equipment.

Q. Now, in the illustration given on the first page of this guide dated July 15, 1953, it gives an example. In this example, where Ransburg supplies the equipment, the fee is $10,000, and where Ransburg does not supply the equipment the fee is $4,000 or, in other words, forty per cent of the former fee?

A. Right.

Q. In other words, am I correct in assuming that where Ransburg supplied the equipment it got an initial fee of approximately two and a half times its cost, but when it did not supply the equipment it merely got the cost of the equipment? Is that correct?

You might refresh your recollection from the memorandum, which refers to the percentage as being forty per cent.

A. Well, the forty per cent figure not only included the cost of the equipment but also it included overhead and a

reasonable profit as determined by the accounting firm of Ernst & Ernst in that study that they made, as well as installation.

• • • • •

62 Q. Well, your basis for a fee where the licensee took the equipment was two and a half times forty per cent?

A. Well, that was obviously an error, that two and a half times. As I said, that was a recollection at the time.

Q. Well, actually two and a half times forty per cent would be a hundred per cent?

A. That's right. I just had these two figures reversed apparently, the sixty and forty.

Q. Well, that price guide before you purports to make a provision where a licensee wants the No. 2 Ransburg license but does not want the equipment. Is that correct?

A. That's right, yes.

Q. Does that pricing guide, or any other pricing guide that you know of ever issued by the company or any other paper, make a provision for where a customer might want the equipment but not the license?

A. I don't know of such a guide.

Q. Do you know of any instance at all where the company has ever rented equipment or leased it or whatever you call it without at the same time granting a license?

63 A. No, I do not.

Q. Do you know of any instance where they ever offered to do that?

A. No.

Q. As far as you know, your company has never offered either to sell or lease equipment without a license?

A. That is right.

Q. In every instance where you have collected a fee for equipment you have also required the licensee to take a license?

A. Well, the fees are not broken down in any such manner, actually. We have never required anybody to take equipment.

Q. Yes. But you have never offered in any way to sell, lease, or rent equipment without at the same time tendering a license?

A. I would say that is right, to the best of my knowledge.

Q. As a matter of fact, your company has never offered to sell any equipment, isn't that correct?

A. To the best of my knowledge, that's right.

Q. I mean by that any electrostatic coating equipment.

A. Yes.

64 Q. You so understand?

A. Right.

Q. Does your company, for the most part, buy its power packs?

A. No. We assemble most of those ourselves.

Q. Do you buy the components?

A. We buy some of them.

Q. Well, do you buy any motors?

A. There isn't any motor in the power pack.

Q. Or, the energizing unit. Do you buy that?

A. You mean the motor for the bell or disc? That is what you are referring to?

Q. Well, let's take that. Do you buy that?

A. We buy parts from different places and assemble them.

Q. What does a power pack consist of?

A. Well, a power pack consists primarily of transformers, rectifier tubes, and capacitors.

Q. Do you buy transformers?

A. No. We wind some of the coils ourselves, cut our own steel and build up the cores ourselves.

Q. Do you buy any?

A. No, I don't believe we have bought any transformers as such of the type that I am talking about, the transformers that go on the voltage pack.

65 Q. You are aware of the fact that there are companies who make power packs though, are you not?

A. Yes, indeed.

Q. If a customer came to you at Indianapolis or a prospective customer or licensee, whatever you call him, and said, "Now, I would like to rent from you electrostatic spraying equipment," under the policies laid down by the company to its sales representatives and to yourself what would you have to tell that customer?

A. Well, I think I would simply refer him to management.

Q. Is it a fair statement to say that your company is not in the business of manufacturing, selling, or leasing electrostatic spray equipment?

A. Oh, I think we manufacture some.

Q. Yes. But you don't sell any of it without a license?

A. Well, that is right.

Q. You don't lease any of it without a license?

A. That's right.

Q. How do you usually get across to the prospective licensee or customer the thought that the customer, in order to have this equipment furnished, has to also take a license? How do you get that across to the cus-

66 tomer?

A. We simply tell him that there is an initial fee and monthly fees involved, that it is a licensed process. And, in fact, most of the time they already know that.

Q. Well, don't they ask you what is embraced in what you furnish for the initial fee?

A. Yes, indeed.

Q. Now, you are in charge of the records of the company having to do with costs and the like, are you not?

A. Yes.

Q. What is the major item of expense in the equipment that you furnish under any particular license agreement? Is it the power pack?

A. It would depend on the equipment to be furnished under that agreement. It might or might not be.

Q. Well, in, let's say, the typical single unit license agreement, is the power pack one of the most expensive items supplied?

A. I would answer that this way, that if you are talking about a triple head unit and you had four triple heads involved, I would say that four triple heads would be more costly than the power pack; if you are talking about a single-head unit, then I would say the power pack

67 would be more costly than the one single head.

Q. Are most of the units that you supply single-head units?

A. Most of them, I would say, are reciprocating disc units having an average of maybe two reciprocating discs, between one and two.

Q. Well, with an installation of one or two heads the power pack would be a dominant item from the standpoint of expense, wouldn't it?

A. I would say the power pack, the controls, and the pump unit would probably all run in the same general area.

Q. Are there manufacturers outside that make pumps, power packs, and controls?

A. Not of this type that I am aware of.

Q. Well, do they make a type that could be adapated?

A. I don't know of any.

Q. You don't know any?

A. No.

Q. Have you ever made it a point to check it?

A. No, I have never specifically looked for any such.

Q. Referring to this price worksheet, Exhibit III-3, which is the pricing on that sheet that includes the
68 power pack?

A. This item right down at the bottom here (indicating).

Q. "For single phase equipment at $5,500 for each unit."

Does that mean that if you have three units you would add three times that?

A. That is correct. Actually in that particular instance $5,800 was added in there. That is three-phase equipment in that particular instance, which would mean you add three times.

Q. Does this particular worksheet embody just one unit?

A. Yes, it does.

Q. Now, is there any other item on that sheet that even begins to approach the $5,500 item?

A. Are you thinking of the cost standpoint?

Q. Of the charge figured in the sheet.

A. Of the charge figured?

Q. Yes.

A. Well, the highest item on here other than that $5,800 is the $1,140.

Q. And what was that for?

A. That was for two pump units.

Q. So that, as far as this worksheet is concerned,
69 the highest priced equipment of all that is listed is for the power pack?

A. That is true, but that has no relation to the value or the cost of the power pack itself.

Q. But you figure more for that particular part or assembly—that is, the power pack part—than you do for any other?

A. Well, we put all our load in that to cover all this balance for the initial fee.

Q. Using this particular worksheet as an example, can you tell us how much of the fee that was charged, which I believe was $9,900, was actual cost?

A. May I see the sheet again, please?

Q. Sure.

By Mr. Hume: It might help the witness, Mr. Meroni, if he had a better explanation of what you mean by "cost."

By Mr. Meroni: Q. I mean the cost of this equipment apart from this loading and installation and profit and the other things that were added in afterwards, the actual factory cost.

A. Well, I would have to estimate that figure, but I would estimate it as somewhere in the neighborhood of $2,000 to $2,200.

By Mr. Hume: Do I understand your question ran
70 to the cost of the equipment, the outlay of the cost of the equipment?

By Mr. Meroni: That's right.

By Mr. Hume: And that is what you meant by that?

By Mr. Meroni: Yes.

By Mr. Hume: Did you understand that?

By the Witness: Yes.

By Mr. Meroni: Q. Now, since this Grand Sheet Metal Company job involved an initial fee of $9,900, which is pretty close to the example of $10,000 on this pricing guide, Exhibit JJJ-2, if the customer would have wanted the license without the equipment it would have paid an initial fee of close to $4,000, would it not?

A. On this basis, yes, but this is not the same comparison of equipment. There is quite a difference in the equipment, what would have been the fee if the customer took that sheet.

Q. Well, on the basis of a $9,900 initial fee for equipment, what woul dhave been the fee if the customer took the license without the equipment?

A. I couldn't tell you; I don't know.

Q. Well, can't you determine that from the pricing guide that was furnished the sales people there?

A. No, because this pricing guide was error to that
71 and covered different type of equipment than that. This same ratio would not apply to this equipment.

Q. Well, was there a new bulletin issued?

A. I believe there has been one, but I am not positive as to that. It doesn't give any specific figures though, if there had been.

Q. Well, supposing this customer had said to you, "Well, I don't want the equipment"?

A. Yes.

Q. What is the fee going to be, the initial fee?

A. Well, we'd have to sit down and figure it out.

Q. Well, how would you go about figuring it out?

A. Well, we'd actually take our latest cost studies and work it from that basis. And those cost figures are quite different, as I said before, from this figure on this one (indicating).

By Mr. Hume: The witness referred first to the figures in Exhibit JJJ-2 and secondly to the cost sheet marked as Binks Exhibit III-3.

By Mr. Meroni: Q. Well, that would be in the same general ratio, wouldn't it?

A. Not necessarily, no.

Q. Well, let's take the one that is in the example in the pricing guide, Exhibit No. JJJ-2. Can you tell me what the actual factory cost of the equipment there
72 was from that illustration or around it, in round figures?

By Mr. Hume: And here we mean the costs in the same way you meant it in the last question?

By Mr. Meroni: Yes, the factory costs disregarding all this so-called loading and installation or what have you.

A. Yes.

Q. The factory costs. You understood what I mean?

A. Yes, I do. I don't think I can in this case because I don't know at this time what the installation costs would run, what our factory costs would run, for that matter, as compared to the present time. I don't recall what those figures would have been in 1953.

Q. Well, in the other illustration of Exhibit No. III-3, as you said, the factory cost would be around $2,200. Would you be in a position to say that the initial fee without equipment would be in excess of $2,200?

A. Well, I know it would be.

Q. Have you any idea as to roughly how much more it might be? Would it be $1,000 more or $2,000?

A. Well, would you repeat the question again?

By Mr. Meroni: Read the question back to the
73 witness please. Read the last couple of questions, so we can get the tenor of it.

(Record read.)

A. I would say it would be two to three times.

Q. So from an economic standpoint, would it be your knowledge and in your records that a prospective licensee would do far better by taking the license with the equipment that by taking it without the equipment?

A. I would have no way of knowing that because I don't know what you could get equipment for, what he could get equipment for if he made it himself or what.

Q. But the fact remains that you know of no instance —at least none on the No. 2 process—where a customer has ever taken the license without the equipment?

A. That's right.

* * * * * *

75 Q. Do you remember having any transaction in 1953 with the Altex Corporation of Milwaukee, Wisconsin?

A. Yes, I do.

Q. Do you perchance recall a letter dated April 28, 1953, wherein you wrote the Altex Corporation and, among other things, said, "As you well know, the operation of the equipment and the manner in which the equipment is used, as well as the type of coating material used, et cetera, is entirely within your control and completely
76 beyond ours. This being the case, there is no reasonable basis on which we could possibly guarantee your satisfaction"?

I hand you that letter and ask you if that refreshes your recollection of your company's policy.

A. Yes, it does.

Q. Does that indicate that your company refuses to guarantee performance?

A. No, not at all. I mean, a guarantee of satisfaction depending on what he wants to do with it is one thing and guaranteeing to reproduce what we did in Indianapolis is another matter.

* * * * *

77 Q. I call your attention to another letter, dated March 23, 1954, addressed to the Webster-Chicago Corporation, attention Mr. Clarence Wallin, chief industrial engineer, written by Mr. Maxwell, wherein, among other things, he says, "For your information, our equipment is not available on the open market and, where-
78 as you could fabricate this equipment, it would cost thousands of dollars to manufacture and you would not be guaranteed its functioning properly."

Do you know anything about that subject?

A. You mean that particular letter?

Q. Well, that guarantee or this particular transaction with Webster-Chicago Corporation, either one.

A. Oh, I am familiar with the Webster-Chicago Corporation as such.

Q. I call your attention to the part I have read and ask you to read it and ask you if that correctly states the company policy as you understand it.

A. Oh, I think so. I don't see how we could possibly guarantee someone else's equipment.

Q. Now, in the records that you have custody of or in the records of the company do you have any records showing a comparison between what your equipment costs and what it would cost on the outside to obtain that equipment?

A. No, I don't believe we do.

Q. Do you know what basis then Mr. Maxwell used for stating that it would cost thousands of dollars to manufacture it?

A. No, I don't.

Q. Is there anything in your records that would
79 indicate that this type of equipment is not available on the open market?

A. That it is not available?

Q. Yes.

A. Oh, I don't know that it is or isn't.

Q. Well, I didn't ask you that, I asked you if there is anything in your records, as far as you know, indicating whether equipment of the type that you are licensing to Webcor was available on the market.

Is there anything in your records that indicates whether it's available or not available?

A. I would say there probably is not.

Q. Or, to put it another way, do your records indicate that your company ever made a survey of the market to determine whether any such equipment was available?

A. I don't know that they have.

Q. At least, you know of no such survey?

A. No; that's right.

Q. Now, here again it was pointed out that if the prospective licensee did not want the equipment the initial fee would be forty per cent of the standard initial fee. In this respect the letter says, "If a customer desires a license without our equipment, installation supervision, and replacement parts or service, the initial fee would be forty per cent of the standard initial fee quoted above."

Is that still your policy?

A. It would depend on the equipment.

Q. You have never granted any such license without equipment, so you actually can't say from experience what was the case, can you?

A. I am not sure I exactly understand your question.

Q. I understand that your company, with regard to the No. 2 system, has never granted a license without furnishing equipment.

A. That is correct.

Q. Hence, you have no actual past experience upon which to base any statement as to the forty per cent other than mere offers, is that right?

A. Oh, no. I think we have information that enables us to arrive at that, a cost information of evaluating our own cost of equipment, service, replacement parts and installation, and so forth.

Q. Well, it says here, "If a customer desires a license without our equipment, installation supervision, and replacement parts or service. * * *"

That is, without those things.

A. Right.

Q. (Continuing.) "* * * the initial fee would be forty per cent * * *."

A. Yes.

Q. If that fee doesn't embrace supervision installation, replacement parts or service, what does it represent?

A. Oh, it just represents the balance of our initial fee, the difference between the forty per cent and one hundred per cent.

Q. Well, then it's clear that this forty per cent would not represent any installation service—

A. That is correct.

Q. (Continuing.) —or any installation supervision.

A. That's right.

Q. It would not represent any replacement parts?

A. We would not say "would not represent." When you say "would not represent," you mean it does not include replacements?

Q. Would not include that.

A. You mean would not include our giving the use of replacements?

Q. Yes. And you would not give, according to this, any service.

A. Yes, that's right.

Q. And, of course, that would not include the equip-
82 ment.

A. Yes, that's right.

Q. So then, what does it include?

A. The forty per cent?

Q. Yes.

A. Well, it's just our initial fee that we charge for an installation of that type.

Q. Then it's an arbitrary fee that is not representative of any service or equipment that is supplied to the licensee?

A. That is right.

Q. And in the examples stated in Exhibit JJJ-2 dated July 15, 1953, such a fee would have been $4,000?

A. That is correct.

Q. I hand you this letter of March 23, 1954, which I have been referring to and ask you if you recall the trans-

action with Webster-Chicago Corporation or if you had anything to do with them.

A. I don't recall having anything to do with it.

Q. Do you know whether you had such dealings with Webster?

A. Yes; I know we installed equipment at Webster.

By Mr. Meroni: I would like to have this letter which was furnished to us by counsel and which was numbered 215 by ourselves in the original group of papers
83 marked for purposes of identification as Binks Exhibit LLL-1.

(Exhibit so marked.)

Q. In your work for the company have you run across any difficulties with licensees or prospective licensees relative to the so-called future inventions clause of the licenses?

A. No. I haven't had anything to do with that phase of the operations at all.

Q. Well, you have negotiated some licenses with that clause in them, have you not?

A. I couldn't answer that yes or no; I wouldn't know offhand.

Q. You wouldn't say you hadn't?

A. No, I wouldn't say I hadn't, no.

Q. You are aware of the fact that some of your license forms, such as this Exhibit D-23 (indicating), had a future invention clause in them in paragraph 11?

A. Yes.

Q. What was your understanding of the policies of the company relative to the matter of future inventions of a license?

A. Well, I don't really have any understanding on that. I simply refer that to the legal group whenever any
84 questions arise on it.

Q. Well, did you explain to prospective licensees

that they would be obligated under that paragraph to turn over inventions to the company under the provisions of it?

A. I wouldn't have myself; I would have referred any questions along those lines to the legal group, who would in turn anwser them.

Q. Do you recall any instance when you did?

A. No, I don't.

Q. Do you recall that in the instance of the General Electric Company negotiations, General Electric did not want the future inventions clause and the company proposed that in lieu thereof they would increase the initial fee from $5,300 to $9,300?

A. I only know that from having read it a couple of minutes ago for the first time.

Q. Had you ever heard of that before?

A. Oh, I think I probably heard of it, but I don't recall figures or anything like that.

Q. Well, you knew that there were some discussions at that time?

A. Yes, I have heard of the discussions on it.

Q. Now, you personally had some dealings with the Altex Corporation matter, didn't you?

85 A. That's right.

Q. Do you have any particular recollection of anything unusual about that transaction?

A. No, not offhand.

Q. Were you aware of the fact that Mr. Pleva, sales representative of your company, was involved in that transaction?

A. Yes, I believe he would be.

Q. You do recall that in that instance the customer, Altex Corporation, wanted to get a guarantee that the equipment you furnished would do a satisfactory job?

A. No. I hadn't recalled it until you mentioned it.

Q. Well, that was the letter I called your attention to awhile ago dated April 28, 1953, and in order that you may have all the correspondence on the subject that defendant has furnished us I hand you three other letters, one dated April 8, 1953, one dated April 28, 1953, and the other dated May 7, 1953, which is Binks Exhibit II-7, and I ask you to look over that correspondence before you answer the next question.

A. All right.

(Discussion off the record.)

By Mr. Meroni: Q. You have looked over that cor-
86 respondence?

A. Yes, sir, I have.

Q. Do you recognize it as papers from the files of your company?

A. Yes, I do.

Q. What did you have to do, if anything, with the transaction of Altex?

A. I worked with Mr. Altex, but I believe it was a Mr. Stapleton who came to the laboratory originally on that, and he himself witnessed what we could do and what we could not do. And, beyond that point, we possibly sent him an agreement, but I don't recall.

That was about the extent of my direct contact with them, other than my letter.

Q. Was Mr. Pleva the salesman in charge of that transaction?

A. He would be, yes.

Q. Was it the policy of your company not to contact any customer in the field unless that customer first came to you? Or, if that is not so, were your salesmen permitted to go out and contact the customers?

A. Oh, they were permitted to go out and contact customers and they frequently do.

Q. In an effort to get them interested in taking a license?

87 A. Yes, that's right.

Q. Or taking a license with your equipment, I should have said. It's the same thing, isn't it?

A. Well, taking a license, and if they want the equipment, why, they can have it.

Q. But they couldn't have the equipment without the license?

A. That's correct, to my understanding.

By Mr. Meroni: I would like to have these letters marked which have not already been marked for identification. I believe one of them has been marked and three of them have not been marked. The one dated May 7, 1953, has been marked as Binks Exhibit II-7, and I would like to have the other three marked as Binks Exhibits MMM-1, -2, and -3, in this order:

Mark the first letter, that of April 8, '53, as Binks Exhibit MMM-1; the second one, a letter to Altex Corporation dated April 28, '53, mark as Binks Exhibit MMM-2; and the other one, a letter from Altex Corporation dated April 28, 1953, mark as Binks Exhibit MMM-3.

* * * * *

94 Q. Now, I call your attention to Interrogatory 65 and the answer thereto, reading as follows:

"Has the defendant ever granted a license in the air type or airless type electrostatic spray coating fields restricted to less than all patents owned by defendant and under which defendant had a right to grant a license in such fields?

"A. Yes, every agreement authorizes the licensee to use a certain process to coat certain articles and to use certain equipment therefor and licenses the licensee under those of the defendant's patents which apply thereto but

does not license the licensee under any patent which does not apply."

When you granted licenses, what was your procedure in that regard?

95 A. Well, I don't know anything about the legal angle to that. The only thing I would do is have a license form made up and I would simply insert the items that they were going to coat and the drawing number which applied to that particular installation they were going to use and also the fees. That's all that I would do.

Q. But you never undertook in any way to spell out any patents that were applicable, did you?

A. No. I wouldn't have any idea of just which ones would be applicable or not.

Q. In other words, you were able to go ahead and consummate these licenses without having detailed knowledge as to what patents were applicable?

A. That's correct.

Q. And that was true of all your sales force, as far as you know?

A. I would think so, yes.

Q. If you had wanted to determine which of the company's patents were applicable in any particular license or prospective license, you would have had to have referred that to your patent counsel, is that correct?

A. That's right, I would have referred it to our legal group and they would have handled it, I am sure.

96 Q. But, as far as you know, in your dealings no licensee that you negotiated with was ever apprised of any specific patents that were applicable?

A. I don't recall of any, no, sir.

• • • • •

By Mr. Meroni: Q. Would you say, from the type
97 of advertising, records, and transactions that you were familiar with concerning licensees and prospective licensees, that the general policy of your company was such that if a customer wanted anything in the electrostatic field you were in a position to supply it except for possibly the solid particle coating?

A. You are thinking of coating materials now?

Q. Yes, coating materials other than the solid particles.

A. In other words, whether or not our process would do almost any type of coating materials?

Q. Yes.

A. I would say generally yes.

Q. And in your working with licensees you would be in a position to say that generally speaking, if they wanted any equipment to do the coating job, you are in a position to supply it?

A. Yes, I would think so.

Q. Well, your company is the only company in the field there is, isn't it, as far as you know?

A. As far as I know, that's right.

Q. Do you know perchance what happens to used equipment that is returned to Ransburg, if any?

A. Yes.

Q. What happens to it?

98 A. It is salvaged and rebuilt and re-used. That is, the parts that can be, of course, are re-used.

Q. In other licenses, maybe?

A. Yes.

Q. Does such equipment usually have some salvage value?

A. Yes, it does.

Q. It must be substantial enough or you wouldn't reprocess it, would you?

A. That's right.

Q. From your knowledge of the records of the company and experience in your capacity as director of technical services, who handles major servicing for Ransburg equipment furnished to licensees?

A. Well, I am not sure of the term "major" there.

Q. Well, who handles the actual servicing of the equipment?

A. Well, I would say the customer does a great deal of it.

Q. Well, do you have any men in your employ or in the company's employ that service equipment?

A. Yes, we do.

Q. How many people would you say you have in that category?

A. Oh, counting the fellow who directs, eighteen. It's a combination job, I might explain, where they do the installation and servicing, but the same people do both jobs.

Q. That comes under your jurisdiction, doesn't it?

A. That's correct.

Q. That is one of your major duties, isn't it?

A. That's right.

Q. Now, you exact fees for servicing, do you not, where you supply the service?

A. Well, we get monthly fees, if that is what you have reference to.

Q. How are those fees determined?

A. The monthly fees?

Q. Yes.

A. They are determined on the basis of the cost of the coating materials used through the equipment.

Q. You mean the more royalties that are involved the greater the fee?

A. Well, I think the greater the cost of the coating

material used the greater the fee, the greater the amount of the cost.

Q. Well, in other words, the greater the amount of fees the customer pays, the greater the service charge would be, is that right?

A. No. There is no relation between the service
100 charge and the fees paid, if that is what you mean, the monthly fees paid, if that is what you are getting at.

Q. Well, let's start over again. I wanted to know—and it's not clear to me because I probably misunderstood you—how your fees are determined for servicing.

A. Well, they are included in our monthly fees.

Q. The monthly fee that is set forth in the license?

A. That is correct.

Q. And that is pre-determined at the time that the license is granted?

A. No. The monthly fee varies each month depending on the cost of the coating material used through the equipment.

Q. But that is still pre-determined as to the ratio, isn't it?

A. Oh, the ratio is pre-determined, the exact amount is not, that is correct.

Q. Now, if the customer does any servicing, is he given any rebate on the monthly fee?

A. No, he isn't?

Q. So far as the customer or licensee is concerned, he might as well avail himself of that service, is that correct?

101 A. Well, except for this reason, that we don't agree to provide any service.

Q. Well, I believe there was a letter I read here that had something to do with servicing. Do you recall that letter?

A. Oh, I could explain it this way, that as a practice we do service the accounts within reason, but the agreement does not explicitly provide for our furnishing the service.

Q. Now, there is a letter here that I called to your attention this morning or this afternoon where you represented to the customer that he could get service from you and he couldn't get it from somebody else or words to that effect.

A. Yes, it would be a practice to give service to the customers.

Q. So even though it's not spelled out in the agreement, the fact is that you do render services for the monthly fee and the customers know that?

A. That's right.

104 Q. Referring now to this Exhibit LLL-4, which is the letter written by Mr. Pleva, I want to ask you if you know anything about the subject of this particular paragraph and, if so, to state what you know:

"I visited Mr. Clarence Wallin and explained the alternative method whereby we would license them to use our process, they to furnish their own equipment. Mr. Wallin wanted to know the monetary details of this alternate scheme and when I advised him that our basic monthly fee would be reduced from $100.00 to $80.00 and that
105 no refund on the initial fee was in the picture, he, of course, lost all further interest. In fact, he wanted to know why he had even bothered to write him concerning such a 'ridiculous' proposition."

Do you know anything about that at all?

A. I know the letter; I just read the letter a few minutes ago, yes.

Q. Well, did you have any contact at all with Mr. Wallin?

A. No, not in regard to that, nothing whatsoever.

Q. Do you know whether Webcor ever accepted the alternate proposition?

A. No; I know they didn't. They never have.

Q. Do you know whether any licensee ever accepted the alternate proposal made in the form letter of May 27, 1953?

A. None of them ever did.

* * * * *

108 Q. Mr. Howarth, as far as you know—that is, of your own knowledge—since the filing of this suit on or about September, 1956, has the company gone ahead with its licensing program without any changes?

A. Yes, sir, as far as I know that is true.

Q. And it has pursued the same program that it had before the suit was filed?

A. Yes.

Q. At least, you had no instructions to the contrary?

A. I didn't, that's right.

* * * * *

118 MILTON F. PLEVA, called as a witness in behalf of the plaintiff herein, having been first duly sworn, was examined and testified as follows:

Direct Examination by Mr. Meroni.

Q. Please state your name.

A. My name is Milton F. Pleva.

Q. Where do you reside, Mr. Pleva?

119 A. In Western Springs.

Q. Illinois?

A. That is correct.

Q. How old are you, sir?

A. I'll be thirty-seven in June.

Q. What is your educational background, briefly?

A. Well, I have a Bachelor's degree in civil engineering from IIT and, of course, all of the preliminary education prior to going to college.

Q. You are a graduate engineer?

A. That is correct.

Q. By whom are you presently employed?

A. By Ransburg Electro-Coating of Indianapolis.

Q. How long have you been employed by that company?

A. Since September of 1951.

Q. Has the employment been continuous since that time?

A. Yes, sir.

Q. In what capacity are you employed there?

A. As a sales engineer.

Q. Has that been your capacity of employment since the commencement of the job?

A. Yes, sir.

Q. Do you have assigned to you any particular area?

A. Yes.

120 Q. Will you state for the record briefly what sales area you represent for the company?

A. The State of Minnesota, the State of Wisconsin, roughly the northern half of the State of Illinois and Lake County of Indiana, and within the Upper Peninsula of Michigan, which, of course, is adjacent to Wisconsin.

Q. Are you the sole representative in this area or do you have someone else working with you?

A. Yes, there is another man as of November 1st of 1956. Prior to that time I was a sole man.

Q. Is he an assistant to you?

A. Yes. Well, we both work together in the area.

Q. Well, are you in charge of the sales office in the area?

A. I would think so, by virtue of seniority, yes.

Q. State briefly for the Court what the general nature of your duties is in your capacity as sales engineer for this company.

A. Well, basically the merchandising of the Ransburg processes; as secondary functions, the maintenance of proper relations with our existing customers, which then would, of course, include the service aspects in terms of making sure that when and if service is required it is provided by the company. That is, I don't personally
121 service any equipment, nor do I have personally any service people reporting to me or under my jurisdiction.

As an ambassador for the company, if you will, in the area, many of the accounts, of course, choose to, if they need attention, contact me locally instead of contacting Indianapolis, so I serve as a go-between, if you will, in this connection.

• • • • • •

125 Q. Now, in your sales efforts with respect to these electrostatic systems—

And they are all electrostatic systems, are they not?

A. I would say so, yes.

Q. (Continuing.) —do you make any effort to sell agreements involving the spraying of solid particles?

A. I never have. It's been my understanding that the scope of our position, our patent position, doesn't cover some of these items. In fact, I think that our agreement specifically omits certain solid particles such as flock or abrasives from deposition by our process.

Q. So that, for all intents and purposes, we can consider that your activities have been concerned primarily with the spraying or coating of liquid materials?

A. That's right, sir.

• • • • •

127 Q. Well, you wouldn't say, for example, unqualifiedly that the No. 2 system would handle the spraying of all types of liquid materials, would you?

A. Certainly not.

• • • • •

129 Q. Well, do you know perchance what the range of viscosities is that is embraced in the type of materials that can be sprayed with the No. 2 system?

A. As a general rule, we would operate somewhere in the range of between, say, seventeen to twenty-five seconds on a No. 2 Zahn. However, I can think of exceptions.

• • • • •

130 Q. Well, there, of course, would be a limit on the range of temperatures that could be embraced in this system?

A. Oh, obviously.

• • • • •

144 Q. Well, in the course of this sales pitch, when does the question come up of what you are selling? That is, in regard to whether you are selling equipment or agreements, when does that question usually enter into the picture?

A. Oh, I think that varies all over the lot. There are people, many people, that just never raise the issue at all. I mean, we maybe get them down to Indianapolis and run tests for them and perhaps at that time they become very enthusiastic about what they have seen. Now, if they want to talk about how we go about this, then maybe that is the first time that we are getting into a detailed discussion of the merchandising procedure and the relative cost for the initial engineering fee and the monthly fees and so forth.

On the other hand, there are people that know of us, of

course, and maybe some of these people, when you
145 call on them, would say, "Well you are the people that rent equipment, aren't you?" and in which case of course, you obviously answer, "Yes, we are the people that rent equipment."

And if the man follows through and asks what our methods are, then I outline our methods and explain to him that we operate under an initial engineering fee and a continuing monthly fee and that, depending on which of our processes might be involved in his particular case, we have specific merchandising procedures for those, and I try to, in general terms, outline them.

Now, on our No. 1 process it's a very simple matter to outline the engineering fee because it's set up on a basis of an empirical formula and I tell them what the empirical formula is and that "If this job gets to the point where you are down at the laboratory and watching your parts run, you can figure your own initial fee yourself because it's $3,000 basic and $300 per gun."

We don't furnish the guns, but we use that as a formula for establishing that fee and try to evaluate all aspects in this sense—I mean, if it's requested.

However, I would say this, Mr. Meroni, that as a
146 salesman I have never tried to talk about price unless the prospect insisted upon talking about price. Salesmen normally don't talk about the prices of their items unless they are asked to.

• • • • •

150 Q. In substance there, then you were selling agreements wherein the customer rented the equipment by paying an initial fee and then by paying a monthly fee thereafter the customer received a license to practice the process, is that right?

A. That's right.

151 Q. Did you perchance, as a part of your training program know, in the case of the No. 2 system, what patents were being licensed?

A. No, sir.

Q. You took it for granted that the company had patents?

A. I was told that.

Q. But that was the extent of your knowledge?

A. Well, I don't know that I was told that. I think your statement was right that I took it for granted, right. I just figured nobody would be doing all this that I saw happening down there unless they figured they had some position.

Q. Well, do you in any of your contacts, say, on the No. 2 system, ever have occasion to tell a customer what patents are applicable?

A. Well, I couldn't do that because I don't know.

• • • • •

155 Q. Well, I hand you, for example, this bulletin dated August 5, 1952, Exhibit OO. Is there any provision in the pricing guide there for the selling of a license agreement without equipment?

156 A. No, sir.

Q. Are you aware of the fact that subsequently the company did issue a bulletin wherein they specifically provided that in the case of the No. 1 system and in the case of the detearing process you were authorized to sell agreements without furnishing the equiment but that no such authorization was given in the case of the No. 2 system?

A. (No response.)

Q. In order to refresh your recollection, I hand you this bulletin of May 27, 1953.

A. Well, I certainly remember this bulletin. Now, what was your question, sir?

Q. That bulletin specifically provides for the selling of license agreements without equipment, but expressly makes no such provision in the case of the No. 2 system, as you will see if you will look under the heading "No. 2 System."

Is that your understanding?

A. Well, my answer would be yes, there is nothing under the No. 2 system that gives that, that defines how a license would be sold without equipment.

Q. Were you aware of the fact that still later you received a bulletin which specifically provided a pricing guide for use in the case of the No. 2 spray system
157 both where equipment was furnished and was not furnished?

A. Yes, I am aware of the bulletin. I saw it in this group you handed me.

Q. I call your attention to this July 15, 1953, bulletin, Exhibit JJJ-2, and ask you if that isn't the bulletin that gave you instructions as to how you could quote a customer on license agreements both with and without equipment.

A. Well, I recall the bulletin, I know it; however, this bulletin did not give me authorization to quote anything because I don't have an authorization. However, it outlined the procedure that management was going to use as of this effective date for so quoting.

Q. Well, you certainly wouldn't endeavor to sell anything where the basis of selling it would be contrary to what is in the bulletin, would you?

A. No, sir.

Q. Your selling activities were consistent with the programs outlined in these bulletins?

A. True.

Q. That is why they were sent to you, so that you would

know what the policies of the company were, isn't that right?

158 A. Yes, that's right.

Q. When, if ever, did you take up with any prospective customer a license on the No. 2 system wherein the customer did not want the equipment?

A. I never had a situation where the customer did not want the equipment and so stated.

Q. Well, in your sales efforts, did you ever apprise any customer that it could get the No. 2 system either in the form of a license by itself or a license plus equipment?

A. Yes, sir.

Q. What customer?

A. Webster-Chicago, or Webcor, as it's now known.

Q. Do you remember any other customer?

A. Well, I have advised a lot of people that you could put in a Ransburg No. 2 system and not put in Ransburg equipment, but I never, to my knowledge—

The Webcor job is the only one that I can think of where we actually clearly outlined it in a letter and gave them pricing both ways and so forth. That was because they requested that, frankly, at the time.

They converted from the No. 1 to the No. 2 and they were familiar with the fact then that this was possible and they wanted to evaluate it, so we outlined it for them

159 in detail.

The problem has been, of course, then in general discussion, if you did outline that, that the question would be probably, "Where would you get the equipment? Where can I get the equipment?" and my answer to that would have to be that I don't know. That is, there haven't been, until perhaps recently, any sources.

Q. Well, you understood there were plenty of sources for power packs, didn't you?

A. Well, I certainly didn't understand and I don't

know whether there are or not for the Ransburg No. 2 process.

Q. Well, let's put it another way: You knew as an engineer that you could purchase power packs?

A. Yes, sir.

Q. You knew that long before you came with the company, didn't you?

A. Yes.

Q. Now, with reference to this date of this bulletin, Exhibit JJJ-2, which is dated July 15, 1953, when was it that you first took up with any customer the fact that your company was in a position to offer the license with or without the equipment?

A. Your question is when was it?

160 Q. With reference to that date, July 15, 1953.

A. I don't recall, sir.

Q. Was it before or after?

A. Well, to the best of my knowledge, I don't recall.

Q. Well, actually you know of no instance where you have ever sold a license without furnishing equipment, isn't that right?

A. That is right, sir.

Q. Has it ever come to your attention in the course of your dealings with these customers that you were calling on that any of them considered the license without taking the equipment to be prohibitive?

A. Are you speaking now economically?

Q. Yes.

A. Well, the only instance that I can recall of a specific outlining of relative costs was, as I indicated earlier, in the Webcor situation, and in that situation that was not brought out, that taking the license without equipment would be prohibitive.

The problem was that they indicated complete reluctance

to go to any effort that might be involved in obtaining this equipment from other sources.

Q. Well, to put it another way, has any customer ever, in your presence, indicated that he considered the
161 license without the equipment to be economically prohibitive because he'd have to pay forty per cent of the fee anyway, whether he took the equipment or not?

A. No, sir; to my knowledge, that was never said to me.

Q. Were you aware of the fact that if the customer took a license without equipment it would receive no service, no replacement parts?

A. Yes, sir.

• • • • •

163 Q. Did you ever give a customer a side by side price comparison between deals in which Ransburg would supply equipment and in which Ransburg would not?

164 A. No, sir, not to my knowledge. I wouldn't have any basis to do that because I wouldn't know what should go in the other column, I wouldn't have any idea of what price it was. But I have made relative columns of that type at times in conjunction with other types of equipment.

• • • • •

167 Q. The fact still remains that you have never sold an agreement wherein the company did not furnish the equipment?

A. Well, that is true.

Q. Do you understand that none of the other salesmen have sold any agreements wherein the company did not furnish the equipment?

A. Yes, sir, that is my understanding.

Q. Now, from your sales experience in selling these agreements, can you give any reason as to why you have been unable to sell agreements without the equipment?

A. Well, I mean, I have an opinion. I mean, am I allowed to set forth an opinion?

Q. Well—

A. Well, I mean, I don't know but I have an opinion,

168 Q. First I am interested in facts as to anything that came to your attention.

A. Well, the situation to me seems obvious. The equipment is something that our customers want and desire. They need it. I mean, it's the thing that is the bulwark of the whole thing.

They don't want a piece of paper, they want the equipment to do this job in the plant. Therefore, they come to our lab if they are interested in a process, and assuming that we do a good job for them, they like what they see, then what they want is the tool. So there it is. So they ask how they get the tool and we tell them how to get it and they either like it or they don't like it. It's either too expensive or not economical or something and then they don't get it.

If it's a sound deal, it's like any other negotiation for any piece of equipment in a manufacturing plant. That is, they like what they see, they want it, they want the equipment.

I think that the answer as to why our agreements have all been sold with Ransburg equipment is because the equipment is certainly a very integral part of what it is that we are merchandising.

The man wants to paint on a production line and

169 you can't do that with a piece of paper, you've got to have tools.

So we bring him down there and he sees these tools and, assuming that they work—I don't mean that every demonstration proves to be successful, but assuming that it does work—and it looks like a good deal for the man, he then wants the tools and we have them, so there it is.

I think that is the reason why we have sold our agreement, if that is the right word to use, with equipment, because the customer wants the equipment.

Q. Would you say that in the process of selling these agreements you have sold the customer on the equipment and then the customer just took the license because it wanted the equipment? Is that it?

A. Yes, I would think that was right, yes, sir.

171 Q. You have referred to Webcor. Am I to understand that you contacted that company in an effort to 172 sell it your No. 2 system?

A. Well, it was actually the other way around. The company had had our No. 1 system for quite some time and contacted me in an effort to see whether a conversion to the No. 2 system would be a desirable thing, an economically desirable thing for them.

Then, yes, I called on them and worked with them and then sold them that conversion No. 2 unit.

Q. Were you aware of the fact that in May, 1953, your company circularized all of its customers with a form letter stating in substance that if a customer wanted to return equipment it could do so on a certain basis?

A. Yes, sir. You don't have to show me that letter; I remember that one well. I wasn't very much in favor of it at the time it was put out.

Q. It was sort of futile, wasn't it?

A. Well, I knew it was going to cause me personally and the other field men a lot of difficulty of people calling up and trying to find out what the hell this was all about and I couldn't even give them any good answers.

I mean, we didn't feel any too happy about it because the first thing these people would want to know was 173 "If I send you your equipment, where do I go for other equipment?" and my answer would have to be "I don't know."

And it put me in a hell of a position to say I didn't swing the idea, that they didn't ask me about management things. Well, the letter went out.

Q. And could you have added as a corollary to that "If you send back the equipment we can't give you any money back for the fee you paid"?

A. Well, sure, sir, and "You have to get it some place else and lay out some more money."

That was kind of a sad situation and I couldn't see how anybody would be interested in that.

Q. So that the record will show what we are talking about, I would like to hand you the form letter dated May 27, 1953, sent to Webcor—that is, Webster-Chicago Corporation of Chicago—Exhibit LLL-2, and ask you if that is the type of letter you are talking about.

A. That's it.

Q. That one caused you a lot of difficulty, did it?

A. Sure.

Q. I also call your attention to another letter, on the letterhead of Webster-Chicago Corporation, Exhibit LLL-3, dated June 3, 1953, and ask you if that is a letter that 174 caused you a lot of trouble.

A. Well, it didn't cause me a lot of trouble, but it certainly meant that I had to go out and see Clarence and have a session with him about it.

Q. You were advised about that letter and then called on him?

A. Yes, that's right, sir.

Q. And do you recall reporting on the result of your visit to the home office?

A. Sure. That is, I didn't specifically, but I know I sent in a letter covering my visit because I do that in the form of some type of a report basically on all of my activities.

Q. Do you have any recollection of telling the home

office that Webster-Chicago Corporation considered the new proposition ridiculous and they wondered why they were even bothered with it?

A. Yes, I do.

Q. I hand you a letter dated June 26, 1953, Exhibit LLL-4, and ask if you wrote that letter following your visit to Webster-Chicago Corporation.

A. Yes, I did write this letter.

Q. Is Webster-Chicago Corporation, in ordinary parlance, referred to as Webcor?

A. Well, not in ordinary parlance. They have
175 changed the corporate name to that in recent years.

Q. But it's one and the same thing, isn't it?

A. Oh, yes, very definitely.

Q. Did you have any other customers that were not under the collar about this form letter of May, 1953?

A. Oh, sure. Well, "hot under the collar," I don't know that I will buy that, but I had other customers that called me to find out what the hell we were talking about. I had that. In fact, I had some that just didn't understand the letter and wanted an explanation.

Q. Were you ever given any understanding by the home office as to why the letter was sent?

A. No.

Q. Were you aware of the fact that they sent out other form letters like this May 27, 1953, letter in July, 1953, too?

A. Not specifically, no, sir.

Q. How did you convince Mr. Wallin that your company wasn't trying to pull any kind of a trick on Webster?

A. I didn't have to convince him of that, sir. All he wanted to know from me was if I could tell him any reason why he should be interested in this type of proposition.
176 First of all, he wanted to know exactly what it meant —I mean, would it mean would he have to send the equipment back. I pointed out that is exactly what it

meant. Would he have any refund coming? No, he would have no refund coming.

What it would mean was that he would procure his own equipment, would have to duplicate that equipment which we had been providing in the past, and that then, but virtue of so doing and by virtue of the fact that now this was his equipment and no longer ours, he would have the responsibility for maintenance thereof, and that the monetary advantage to him would be a reduction in the minimum monthly fee from $100.00 to $80.00. That would be his gain.

He said, "Well now, for me to go out and get this equipment and pay for it, how long would it take me to amortize it at $20.00 a month savings?"

I said, "I haven't got any idea because I don't know what it would cost you to buy it."

So he said, "If we are about to do this, I am sure that the whole thing sounds ridiculous to me," and so I so quoted him.

Q. Well, in your letter of June 26, 1953, to the home office, LLL-4, you said, in the last sentence, "The meeting ended amiably with Mr. Wallin convinced that
177 we weren't trying to pull any kind of a trick."

Now, what I wanted to know was how did you—

A. I understand, sir.

Q. (Continuing.) —convince Mr. Wallin.

A. Yes; I remember. Well, he thought, he broached this point, of whether or not this had anything to do with a desire to do away with responsibilities—in his case the equipment had been there for some time and perhaps our maintenance costs on it might be going up—whether we were trying to get out from under such responsibilities, and I pointed out to him that as far as I knew Ransburg would be happy to leave that equipment in there for the

next fifty years and maintain it and live up to all of their responsibilities and that I had nothing to do with it.

And, for some reason or other, I convinced him that that was the case and that we weren't trying to beat out Webcor from anything, that he could continue on the basis that he was on and that there would be no pressure of any kind brought to bear to change that basis.

That was what he apparently suspected, that this thing was leading to an attempt on the part of my company to get him to put in his own equipment so we would
178 no longer have to maintain the equipment as we had agreed to do.

Q. But, in any event, you made it plain to him that even if he had the equipment for fifty years he'd still have to pay the monthly fee or the royalties?

A. Well, I don't think I specifically pointed that out, sir, because he knows that, I mean, that is in the agreement.

Q. It goes on indefinitely?

A. Yes, sir.

Q. There is no time limit?

A. Yes, sir, that's right.

* * * * *

184 Q. Did you ever have any discussions with any of the other sales representatives of the company relative to these form letters that were sent out in May and June of 1953?

A. No, sir.

Q. Do you know of your own knowledge whether they had the same experience you had?

A. Of my own knowledge, I don't know, no, sir.

Q. You never compared notes with them?

A. No. I see them so seldom.

Q. But the sending out of those letters did make a lot of extra work for you, didn't it?

A. Well, you use the word "lot" which is a matter of degree, of course. I don't know what a "lot" is. It made a lot of extra work for me, of course, because
185 I had people to talk to at a time when normally I wouldn't perhaps have had to talk to them.

Q. In substance, you had to explain away those letters?

A. That's correct.

• • • • •

192 Q. Well, for illustration, in the case of this Exhibit JJJ-2 the customer, under the example given there, would have had to have paid a minimum fee of $4,000, isn't that right, if he didn't take the equipment?

A. Yes, sir, that is correct.

193 Q. And for only $6,000 more he would get the whole caboodle?

A. Yes, that's right.

Q. Including service, installation, parts, et cetera?

A. Yes, sir.

Q. Would you say it would be an accurate statement to say that the alternative plan, that without equipment, wasn't sufficiently attractive for you to be able to sell it?

A. Well, I couldn't say that because I never had an occasion to try to sell it.

Q. The fact remains—

A. Nobody asked me to sell it.

Q. (Continuing) —that you did tell customers about it though?

A. That it was available?

Q. Yes.

A. Yes, sir.

Q. And you were never able to sell it?

A. I never had a buyer. I never had anybody that wanted to do that.

Q. Well, if you told the customers about it and none

of them bought it, the fact would be that you were never able to sell it, isn't that right?

A. Well, I don't know how to answer that, Mr.
194 Meroni. I will say this, that as a salesman I don't think I ever really tried to sell it. I mean, I don't see why I should try to sell equipment for someone else when I am working for Ransburg.

I mean, I never, to the best of my knowledge, ever tried to put on a real good, strong sales pitch to anyone of my customers along the line that he ought to go out and buy somebody else's equipment. In fact, I couldn't, because the natural thing for that man to do, for any man to do, had I so done, would be to say to me, "Where do I go?" and then I would be in a position where I had to say, "I don't know."

That puts me a horribly stupid-looking position, which I try not to get into. I get into enough of them anyway, but I try not to whenever possible, try not to get into any such predicament.

So that I have never really tried to sell anyone on taking the license without equipment, but I always told them it was available that way.

Q. Does management know that?

A. That I never tried to sell them?

Q. Yes.

A. I don't know, sir.

Q. Well, you didn't keep it a secret, did you?

195 A. Oh, no, no. But, I don't remember that I ever wrote them a letter stating that this is what I am doing.

Q. Well, you made it plain to them that you were doing everything you could to sell their equipment?

A. Surely.

Q. And regardless of the reason, whether it be for

economic reasons or otherwise, the fact still remains that no customer, as far as you know, bought this alternative plan or agreement without equipment?

A. That is right.

• • • • •

197 ELMER HOULBERG, called as a witness in behalf of the plaintiff herein, having been first duly sworn, was examined and testified as follows:

Direct Examination by Mr. Krause.

Q. Would you state your name, please?

A. Elmer Houlberg.

198 Q. Where do you live, Mr. Houlberg?

A. I live in Dundee, or just west of Dundee. It's Sleepy Hollow Manor.

Q. Is that the post office address?

A. The post office address is Dundee, Illinois.

Q. What is your age, sir?

A. My age is forty-two.

Q. By whom are you employed presently?

A. Chicago Rawhide Manufacturing Company.

Q. What is your position with that company?

A. Assistant general manager.

Q. Can you give us a brief outline of the scope of your duties and responsibilities in your present position?

A. Well, the responsibilities with the company generally have to do with the controlling of production and purchasing within the Elgin plant. This is the Elgin Division in Elgin, Illinois.

Q. How long have you been employed by Chicago Rawhide Company?

A. Twenty-two years.

• • • • •

203 Q. Did Mr. Pleva give you any general idea as to the manner in which Ransburg equipment is handled?

204 A. He outlined generally, as I recall, that their equipment was available on a rental basis. There was a basic minimum charge per month for their equipment and in addition to that the product was classified and the rental was based on a savings in material through volume use.

In other words, you had a basic minimum rental per month, but that could vary depending on the volume of material which was used in connection with their equipment.

• • • • • •

206 Q. I notice that there is a document entitled Ransburg Electro-Spray Agreement attached to this letter. Was that attached at the time you received the letter?

A. Yes, it was.

By Mr. Meroni: Can we have an understanding that the form of agreement that was submitted is your agreement D-35, so that we don't have to burden the record with another copy?

By Mr. Hume: Certainly, if it compares. I don't know whether that is one, but I will take your word for it. We will have the understanding on the basis that this form conforms to the one you have already had and we won't have to put in the other copy. It will take the same number as the copy to which it conforms, and I assume that is D-35, if you have compared it.

How about the number in the lower right-hand corner?

By Mr. Krause: The number is 438-1.

By Mr. Hume: That checks. I should have said, "In the lower left-hand corner."

By Mr. Krause: I am going to ask the court re-
207 porter to mark this letter of Dr. Miller's, consisting of three pages, addressed to Mr. Elmer Houlberg, dated July 26, 1955, as Binks Deposition Exhibit OOO.

I am going to have this letter photostated here so that you can take the original back with you, Mr. Houlberg.

A. Please.

(Exhibit so marked.)

Q. Will you continue with your description of what happened at Indianapolis then, sir, after the demonstration had occurred and after you had discussed this matter with the people at Indianapolis.

A. Well, generally I have outlined already what occurred down there. After seeing the application of our material and getting the information that was just outlined, we were through down there and went back to Elgin.

Q. What happened next in your business relations with Ransburg?

A. Well, I wrote to John E. Maxwell on November 3, 1955, and attached with my letter our formal purchase order 100410-134 to cover the installation of one unit electro-coating equipment per Ransburg's drawing No. 231349.

That was for electrostatically coating metal seals in accordance with Ransburg's electro-spray agreement serial No. 5940.

Q. Was that agreement—well, excuse me.

A. We also attached with the letter and the order which was mailed four signed copies of this agreement No. 5940 and we asked that two of the copies be signed by themselves and returned to us for our files.

And I might point out this order confirmed our wire of October 20th to Mr. D. Howarth and also confirmed the installation cost of $7,300, the material being installed on a rental basis, with a basic minimum rental fee of $175.00 to apply.

Q. Did you get a reply from Ransburg to that letter?

A. Yes, we did. Now, wait a minute now. Yes, we received a reply from Mr. Harry E. Downer on November

4th which acknowledged receipt of the signed copies of the agreement.

He pointed out that Mr. Harold P. Ransburg had signed this agreement on behalf of the Ransburg Company and he returned with that letter these two signed copies. And he went on to note, or made reference to, our purchase order No. 100410-134 dated November 1 of '55 and said it contains provisions which might be considered an addition to the provisions of their agreement No. 5940, and he
209 further stated that this agreement sets forth the entire contract between their company and ours and that he asumed that we had isued such order merely to facilitate our own record-keeping and not in anywise to modify their agreement, which was basically true.

The purchase order was issued for our records in connection with the installation of this equipment.

Q. May I see that letter from Mr. Downer, please?

A. Yes.

Q. May I see the letter that preceded this?

A. Pardon?

Q. Your letter to them that preceded this.

A. Yes.

Q. Do you have the purchase order available?

A. Yes.

Q. Do you have that Ransburg drawing No. 231349?

A. Yes, sir.

Q. May I see it, please?

A. Yes, sir.

By Mr. Meroni: Mr. Hume, do you have Ransburg's copy of that order 100410, so that we could have it marked?

By Mr. Hume: Right here (indicating).

By Mr. Krause: I am asking the reporter to mark
210 this as an exhibit.

By Mr. Hume: You had better compare it first.

By Mr. Meroni: Yes. It's all right.

By Mr. Krause: I am asking the reporter to mark this Chicago Rawhide Manufacturing Company purchase order No. 100410 dated November 1, 1955, as Binks Deposition Exhibit PPP-1 for identification.

(Exhibit so marked.)

By Mr. Meroni: Do you also have a copy of Mr. Downer's letter that we could mark so that we don't have to have this copied? Then we will have copies made.

By Mr. Hume: Why don't you mark the original? It's got the signature on it.

By Mr. Meroni: All right. We will have to make copies of it then.

By Mr. Krause: We will have Mr. Downer's letter to Chicago Rawhide Manufacturing Company dated November 4, 1955, marked as Binks Deposition Exhibit PPP-2 for identification.

(Exhibit so marked.)

By Mr. Meroni: Do you have an extra copy of the drawing we could mark?

211 By Mr. Hume: Yes.

By Mr. Ice: We don't have an extra one, no.

(Discussion off the record.)

By Mr. Krause: I shall ask the reporter to mark this Ransburg drawing No. 231349 dated August 2, 1955, as Binks Deposition Exhibit PPP-3 for identification.

(Exhibit so marked.)

Q. Mr. Houlberg, I am handing you this letter from Mr. Downer dated November 4, 1955, identified as Exhibit PPP-2, and I ask you whether you are familiar with the discrepancy which Mr. Downer was calling to your attention in this letter and, if so, to state your understanding of it.

A. The only discrepancy is that I understood that the agreement in itself was not spelled out in our purchase order to him, and he was referring to that.

Q. I now hand you a copy of your purchase order which has been identified as Binks Exhibit PPR-1 for identification, and ask you if there is any reference in this purchase order to a license agreement.

A. There is no reference in our purchase order to the license agreement.

Q. You mentioned awhile ago, Mr. Houlberg, that
212 you were interested in getting the equipment. Did you have any interest beyond the securing of the equipment?

A. Did we have an interest beyond securing the equipment?

Q. Well, what was your main objective in going to Ransburg?

A. Well, our main objective in going to Ransburg at the time was to investigate the equipment that they had available and which we had inquired about to be used in applying this coating to our seals, the same as we had done, as I mentioned before, with, I believe, three or four sources for spray equipment.

Q. Did you ever request a patent license from Ransburg as part of your negotiations?

A. No, we did not.

Q. Has the Chicago Rawhide Company entered into other agreements besides the one you have testified about with Ransburg?

A. With Ransburg? No. The same agreement is still in effect, to my knowledge.

Q. Can you give us an idea of what your monthly payments have been under that agreement?

A. $175.00 a month.

213 Q. In every month?

A. In each month.

Q. Have you ever exceed the minimum charge?

A. No.

Q. In your contacts with Ransburg representatives such as you have testified about, those with Mr. Pleva, Mr. Maxwell, and Mr. Miller, did any of them ever suggest to you that you could procure an agreement from Ransburg in which Ransburg would not supply the equipment?

A. I am not aware of it, no.

Q. Were you the man in charge as far as Chicago Rawhide was concerned with regard to this negotiation?

A. Yes, sir.

* * * * * *

234 PAUL ROTHE, called as a witness in behalf of the plaintiff herein, having been first duly sworn, was examined and testified as follows:

Direct Examination by Mr. Krause.

Q. Would you state your name, please?

A. Paul Rothe.

Q. Where do you live, Mr. Rothe?

A. Lombard.

235 Q. Illinois?

A. Lombard, Illinois.

Q. What is your age, sir?

A. Forty.

Q. What is your educational background, Mr. Rothe?

A. I have a year of college.

Q. In what field?

A. Engineering.

Q. Are you appearing here under a subpoena?

A. Yes.

Q. By whom are you employed presently, Mr. Rothe?

A. National Cylinder Gas Company.

Q. How long have you been employed by that company?

A. Twenty-one years.

Q. Where is the National Cylinder Gas Company located?

A. 840 North Michigan.

Q. Is that in Chicago?

A. Chicago, Illinois.

Q. What is your present position with that company, sir?

A. Engineering.

Q. Can you give us an outline of the scope of your duties at the present time?

A. Design engineer in designing new plants, plant equipment.

236 Q. What is the business of the National Cylinder Gas Company?

A. Industrial gas. That is, they manufacture oxy-acetylene-hydrogen welding and cutting equipment.

Q. Have you ever had any business dealings with the Ransburg Electro-Coating Corporation of Indianapolis, Indiana?

A. Yes, I have.

Q. Can you tell us how that first came about?

A. Well, I saw an ad in one of the industrial magazines where I noticed this electrostatic painting and recommended it to my superior and he asked me to look into it, which I did.

Q. When was that, sir?

A. I'd have to look at my file, to tell you the truth. It's a few years ago and I can't recall the date.

Q. Will you look in your file and see if you can fix that date for us?

A. Yes.

By Mr. Krause: Let the record show the witness is examining his file.

A. It was January 19, 1955.

247 Q. Mr. Rothe, I call attention to that letter of May 6, 1955, which we have had identified as Binks Deposition Exhibit BB-4 and I call your attention specifically to the second paragraph, which reads as follows:

"The enclosed agreement provides a license to use our No. 2 electro-spray process and for our furnishing certain additional items, including special equipment, supervision of its installation, and replacement parts for such equipment that becomes defective as the result of normal usage. We understand that you wish this type of agreement rather than one under which we do not furnish these addi-
248 tional items."

Now, Mr. Rothe, did you ever ask for an agreement from the Ransburg Company?

A. We were interested in a proposal on their equipment.

Q. Did you ever ask for a license under any Ransburg patents?

A. No.

Q. Did anyone in the Ransburg organization that you talked to suggest that you might be licensed under some alternative arrangement wherein Ransburg would not supply the equipment?

A. I couldn't recall that.

• • • • •

262 CLARENCE E. WALLIN, called as a witness in behalf of the plaintiff herein, having been first duly sworn, was examined and testified as follows:

Direct Examination by Mr. Meroni.

Q. For the purpose of the record, would you please state your name?

A. Clarence E. Wallin.

Q. Where do you reside, Mr. Wallin?

A. 3807 North Spaulding, Chicago.

Q. How old are you, sir?

A. Forty-seven.

Q. By whom are you presently employed?

A. Webcor, Incorporated.

Q. In what capacity?

A. Manufacturing engineer.

Q. Where is that company located?

A. We have four plants in Chicago and the main office is at 5610 West Bloomingdale.

Q. Is that where you are located?

A. No. I am at 3912 West McLean.

Q. What is the general nature of the products of that company?

A. Record changers, tape recorders, phonographs, 263 high fidelity equipment, laminations.

Q. Was that company formerly known as Webster-Chicago Corporation?

A. Yes.

Q. It's now called Webcor?

A. Webcor, Incorporated.

Q. How long have you been associated with that company?

A. Since July of 1950.

Q. How long have you been associated with it in the same capacity as now?

A. Oh, since, I'd say, the spring of 1951. It was about six months after I came.

Q. Are you a graduate engineer or have you acquired your engineering training by your experience?

A. No, I have no degree.

Q. You have acquired it through experience?

A. And some night study.

Q. Are you acquainted with any of the personnel of the

Ransburg Electro-Coating Corporation in Indianapolis, Indiana?

A. Yes; I have met several of them at various times.

Q. You understand that this is a suit between the Binks Company and the Ransburg Company?

A. Yes.

264 Q. And you are here pursuant to a subpoena?

A. That's correct.

Q. Did I understand you to say that you had some dealings with the Ransburg people?

A. Yes. Except for in early 1950, most of the transactions with Ransburg had gone through me.

• • • • •

266 Q. In order to assist you in your recollection of the matter, I also call your attention to a photostatic copy of another letter, allegedly written by yourself, dated June 3, 1953, which has been identified as Binks Exhibit LLL-3.

A. Yes, that's right. I don't have these in my mind; they must have been turned over to somebody else.

Q. But did you write that letter?

A. Yes.

Q. That is dated June 3rd? Or, what is the date of it?

A. June 3rd. And we did receive the one of the 27th, the one of May 27th, also.

Q. Your letter of June 3rd was in response to the one of—

A. Yes.

Q. (Continuing.) —May 27th?

A. Yes.

Q. As a result of the writing of your letter of June 3rd did the Ransburg people further contact you?

A. Well, I don't recall whether they contacted us or not.

Q. I hand you what purports to be a letter written
267 by Mr. Pleva dated June 26, 1953, identified herein as Binks Exhibit LLL-4, and ask you if that refreshes your recollection in any regard as to whether anybody from Ransburg contacted you following your letter of June 3rd.

A. Yes, that's correct. He did come in and we did discuss that, yes.

Q. You mean Mr. Pleva did come in to see you?

A. Yes.

Q. You understood he was the Chicago area representative of Ransburg?

A. Except for a few early instances, he's usually the one that I contacted in dealings with Ransburg—locally, that is.

Q. Now, he quotes you as having said, "In fact, he wanted to know why we had even bothered to write them concerning such a 'ridiculous' proposition."

Why did you characterize it as a ridiculous proposition?

A. Well, for the economics of the offer, because we would have to go in and spend a certain amount of money to replace their equipment and for doing that the returns that we would have gotten wouldn't have paid for our expenditures.

So, there wasn't even any point of even consider-
268 ing it.

I have an inter-office memo here that I sent to my boss at the time, and our savings only would have amounted to $20.00 per month. We would still have to pay them royalties at the rate of $80.00 per month, plus ten per cent of the cost of the paint and reducers, so to save that at $20.00 * * * well, there wasn't any point in talking about it any farther.

Q. You mean over and above that you would still have had to buy your equipment if you had accepted the offer?

A. Oh, sure, sure. That was the basis of it. We were to return their equipment and furnish our own equipment—following their method of applying paint with the No. 1 system, that is.

Q. Well, had your company made an initial fee payment to get that equipment? Had your company paid an initial fee in order to get that equipment?

A. Yes.

Q. Was that a substantial amount of money? Do you recall the amount?

A. I don't know. I may have it here.

Well, according to information which I got from the records back in 1953, we paid Ransburg $3,018.62 for the No. 1 equipment. That was their installation and 269 engineering charges which they normally made on that type of a contract, and that would have been forfeited, we would have gotten no return out of that.

Q. If you had accepted this proposal of the letter of May 27, 1953?

A. Yes.

Q. Is that the letter you are referring to?

A. Yes.

Q. Is that the proposal you are referring to?

A. Yes, that's right.

Q. Have you ever seen this letter of Mr. Pleva's before today?

A. No, I don't believe I ever saw this.

Q. I now hand you what purports to be a copy of another letter written to your company, this being a photostat of the copy from the files of Ransburg, dated March 23, 1954, identified herein as Binks Exhibit LLL-1, and ask you if you recall receiving the original of that letter.

A. Yes, I received the original.

Q. To what type of system did that pertain?

A. The No. 2 disc.

Q. What was your understanding in your dealings with Ransburg as to whether any of the Ransburg systems could be purchased outright?

270 A. Well, as I recall my understanding, the most normal way for them to handle leasing of their equipment—that is, the common way—was on a rental basis, with the royalties based on the amount of paint and a certain rental every month.

We had had a conversation on the possibility of buying the No. 1 system, and when we went to the No. 2 we also asked them about the possibility of buying it rather than leasing it.

Well, as I recall, they wouldn't sell the equipment from their own stock but they would furnish the engineering information—and on a contract basis, of course—where we would pay royalties.

They would furnish the engineering background to install the system of that type, but it would be up to us to go out and procure the equipment on our own from whichever sources we could determine could supply it and, of course, we would have to maintain the equipment ourselves.

Q. Go ahead, sir.

A. And, as I recall it, we made this change just before our busy season; in fact, we were into our busy season already. We felt it was a big enough step to make the step from the No. 1 to the No. 2 without getting involved in a lot of additional engineering, so we didn't bother

271 any more about that part of it.

Q. Did you procure from anyone, either from Ransburg or elsewhere, any estimates as to what it might cost to buy equipment for the No. 2 system from someone else?

A. Not a No. 2, no.

Q. Did you on the No. 1?

A. Well, that was not at that time. Oh, about a year

and a half before that I had checked other No. 1 systems, but we decided not to go to that because the No. 1 had certain limitations that wouldn't work on some of our parts.

Q. Did anyone from Ransburg ever give you an estimate as to what electrostatic spray coating equipment would cost if you bought it from an outside source?

A. Well, not in correspondence, no.

Q. Did they do it orally?

A. Well, it was more or less given us and we understood from conversations that the cost of the equipment that we were getting on this contract was more than what we were paying on our initial installation.

Q. Well, on the No. 2 system as set forth in this letter of March 23rd, the recommended system there entailed an initial fee of around $8,400.

A. Yes.

272 Q. Is that the one you took?

A. That is the one we took.

Q. Did you understand that if you went on the outside and tried to buy that equipment it would cost you more than $8,400?

A. That was our understanding, yes.

Q. From the Ransburg people?

A. Yes. And it was also stated that the equipment costs were prorated over that fee and the royalties that we would be paying.

Q. By that do you mean that part of the Ransburg cost was obtained from the initial fee and part from the royalties?

A. Yes.

Q. Is that what you mean?

A. Yes.

Q. Was anything ever said to you by Ransburg's representatives about the patent license?

A. No, not that I recall.

Q. Was anything ever said to you by Ransburg as to whether you could acquire the equipment for the No. 2 system without taking the license?

A. No.

Q. Well, did you have any understanding at all as to the patent situation?

273 A. Nothing that I can recall, no.

Q. Well, in your discussions with Mr. Pleva and other representatives of Ransburg did anything come up about the matter of your having to take a license in order to get this equipment?

A. No, I don't recall anything about that.

Q. You do recall that the discussion centered around leasing the equipment?

A. Well, that is what our contract is set up on, isn't it? Isn't it a leased equipment basis?

Q. Did you have any discussions of any other basis, other than a lease basis, with representatives of Ransburg?

A. Well, we went over there. We discussed buying it. It's in that letter.

Q. Which letter are you referring to, sir?

A. The one dated March 28, 1954, at the top of the second page.

Q. Well, the second paragraph there, in referring to equipment, in stating it would cost thousands of dollars to manufacture, refers to the No. 2 system, I take it.

A. That is what this letter is about, yes.

Q. Now, in the first sentence of the letter, the first sentence of the letter on the second page, appears this

274 statement:

"If a customer desires a license without our equipment, installation supervision, and replacement parts or

service, the initial fee would be forty per cent of the standard initial fees quoted above."

Did you understand by that that if you took the deal tendered by Ransburg without equipment you would still have to pay forty per cent of the $8,400?

A. That is the way it reads, yes.

Q. And you would not get any installation supervision or any replacement parts or any service?

A. That's right.

Q. Did you take the No. 2 system?

A. Yes.

Q. You entered into a contract with Ransburg?

A. Yes, we did.

Q. And Ransburg installed the system?

A. Yes.

Q. What if any services did Ransburg render in connection with that system?

A. Every time we have a service problem they are called, and they get a man there practically the following day.

Q. Have they made any additional charges for that 275 service, do you know?

A. No.

Q. That is embraced in your—

A. Yes.

Q. (Continuing.) —charges?

A. Yes. That is covered by the fee that we pay.

Q. Have they also rendered technical assistance?

A. Yes.

Q. When has that been?

A. From time to time we have sent parts, special parts where we have finishing problems which we felt we needed a little additional help on, to them and they have run additional tests in their lab and have given us the answers.

Q. Have they made any charge for that, to your knowledge?

A. No.

Q. That has been included in the charges—

A. Yes.

Q. (Continuing.) —under the contract?

A. That's right.

Q. Have you ever had to acquire any replacement parts?

A. No. All the parts in the equipment are covered by our charge.

276 Q. Well, I mean, has Ransburg from time to time furnished additional parts?

A. Oh, yes.

Q. You haven't gone out on the outside and bought any parts?

A. No, no.

Q. You considered that was all included in the contract?

A. That's right. We even get hoses, connecting wires. The lead-in cable will break down, and that is furnished.

Q. Well, you could buy that on the outside, if you wanted it?

A. We could, but why should we when we are paying for it.

Q. So to that extent it has cut down the amount of business you have had to transact with outsiders as far as these parts are concerned, is that right? I mean third parties, people besides yourself and Ransburg. You haven't had to go out and buy anything from other people?

A. For this particular equipment, you mean?

Q. Yes, yes.

A. The No. 2 equipment?

Q. Yes.

277 A. No, we don't buy anything for the No. 2 for their part of the equipment. There are other parts, the paint supply and stuff, which we still buy outside.

Q. But nothing for the equipment that they furnished?

A. No, we don't buy anything.

• • • • •

280 ANDREW G. HUBBARD, called as a witness in behalf of the plaintiff herein, having been first duly sworn, was examined and testified as follows:

Direct Examination by Mr. Meroni.

Q. Please state your name.

A. Andrew G. Hubbard, H-u-b-b-a-r-d.

Q. Where do you reside, Mr. Hubbard?

A. Naperville, Illinois.

281 Q. How old are you, sir?

A. Fifty-three.

Q. Are you here pursuant to a subpoena?

A. I am.

Q. With whom are you presently associated?

A. With the Hotpoint Company, Division of the General Electric Company.

Q. In what capacity?

A. Patent counsel.

Q. How long have you been employed in that capacity by that company?

A. Since June of 1950.

Q. Just for the purpose of the record, state generally the nature of the products of the Hotpoint Company.

A. The Hotpoint manufactures what we call major appliances: water heaters, dishwashers, clothes washing machines, refrigerators, ranges, food waste disposers.

Q. They make the so-called white line?

A. Yes.

Q. Have you had any dealings with the Ransburg Electro-Coating Corporation, the defendant in this case?

A. Yes.

282 Q. In what connection?

A. I had direct dealings with them in connection with an agreement which I was called upon to review. I recall that was in 1952. And, generally speaking, an agreement comes to me for review as to its patent provisions, for me to see whether or not the agreement provisions are acceptable to the company generally.

In an organization such as the General Electric Company more than one operating division might be concerned when an operating division takes an agreement because the agreements are generally with the General Electric Company.

In the present instance I recall that I objected to a patent provision which, as I recall, required the Hotpoint Co. to disclose to Ransburg and to give to Ransburg rather complete rights under any inventions which we might make in connection with the paint spray equipment. My objection to that was that it was basically unsound, and we did negotiate a revision of that paragraph.

Q. Ransburg supplies several types of systems. Do you perchance know what type of system it was or what the identity of the system was that you had your dealings on?

283 A. I suspect it was the No. 2 so-called system, the airless spraying system. I am not sure whether the Hotpoint Company has any of the old gun type systems. I think they did not have after my association with Hotpoint.

Q. Do you know whether you ultimately consummated an agreement with Ransburg for the No. 2 system?

A. Yes.

Q. You did consummate it?

A. Yes.

Q. Do you know whether any revision was made in the paragraph having to do with inventions that you mentioned?

A. Yes. In that particular case we revised the paragraph along lines that I considered satisfactory for the General Electric Company.

Q. Do you perchance have a copy of the agreement with you?

A. Yes, I have.

Q. Can you produce it?

A. This agreement, which is identified as Serial No. 4340, is the agreement I spoke of (indicating).

Q. I notice that in this agreement the paragraph entitled "11. Future Inventions" is crossed out.

A. That's correct.

284 Q. Is that the paragraph with the thing that you were talking about before?

A. It is.

Q. And embraced by this agreement is an amendment on a single typed page. Is that the amendment you negotiated?

A. That is.

Q. And that is entitled "11. Future Inventions"?

A. That's correct.

Q. That paragraph was substituted for the one that appears in the printed form?

A. Yes.

Q. For that in the printed agreement?

A. Yes.

Q. Who did you contact in the Ransburg Company in the negotiations for this change?

A. We met in Indianapolis with Mr. Downer, I believe, who is their resident counsel.

Q. Downer?

A. Downer. And with Mr. Harold Ransburg and others. As I recall, Mr. Harold Ransburg was the one in the Ransburg organization who seemed primarily concerned with this agreement.

Q. Did you endeavor to obtain an agreement without any such provision as to future inventions?

285 A. Yes, we did.

Q. With what results?

A. Negative results. Now, I might say that such negotiation was carried on orally at this meeting in Indianapolis that I spoke of.

Q. With Mr. Harold Ransburg?

A. And Mr. Downer.

Q. And Mr. Downer?

A. It was a general discussion directed towards what I thought was the inequity of this paragraph 11.

Q. Well, can you tell us what transpired in that discussion—that is, what you said and what Mr. Ransburg said? That is, as you recall it.

A. I suspect I tried to preach to them a little bit about what I considered a rather killing-the-goose-that-laid-the-golden-egg kind of a provision.

Generally speaking, the General Electric Company has a rather liberal licensing policy. We do not require and, as a matter of fact, we steer away from, the so-called grant back provisions and I have probably been indoctrinated in that philosophy. So our discussion was a very friendly one and a rather long one.

Mr. Downer, as I recall, talked about the Trans-Wrap situation as being one which justified
286 their position and we had considerable argument about that. The net result was, however, that I did not per-

suade them to eliminate this patent provision and we did negotiate that one which I thought was a satisfactory substitute for theirs.

• • • • •

287 Q. Now, I notice that this agreement, which I understand was executed by your company—

A. Yes.

Q. (Continuing)—and is still in force and effect—

A. Yes.

Q. (Continuing)—does not identify specifically any patent.

Did you get any supplemental rider, or anything that identified any patent of Ransburg?

A. No.

Q. Were you in any way advised as to what patents of Ransburg were applicable?

A. No.

• • • • •

296 CLARENCE GOLTERMANN, called as a witness in behalf of the plaintiff herein, having been first duly sworn, was examined and testified as follows:

Direct Examination by Mr. Krause.

Q. Would you state your name, please?

A. Clarence Goltermann, G-o-l-t-e-r-m-a-n-n.

Q. And your address, sir?

A. Home or factory?

Q. Your home address.

A. 633 Main Street, Glen Ellyn, Illinois.

Q. And your age?

A. Forty-two.

Q. Are you here pursuant to a subpoena?

A. Yes.

Q. By whom are you employed, Mr. Goltermann?

A. Poray, Incorporated.

Q. Where are they located?

A. 3369 West Grand Avenue, Chicago 51, Illinois.

Q. How do you spell that name Poray?

A. P as in Peter, o-r-a-y.

Q. How long have you been employed by that company?

A. Twelve years.

Q. What is your present position with that company?

297 A. Vice-president.

Q. What is the business of the Poray Company?

A. They are contract manufacturers and finishers.

Q. What type of products do you manufacture and finish?

A. We have no product of our own; we manufacture just about everything. Basically we are in the radio and TV industry.

Q. Have you ever had any business dealings with the Ransburg Electro-Coating Corporation of Indianapolis, Indiana?

A. Yes.

• • • • •

304 Q. In all of your contacts with the Ransburg organization leading up to these contracts, did anyone in the Ransburg organization suggest to you that you could get the equipment without a patent license?

A. Purchase it outright?

Q. No; without a license to use the Ransburg patents, whatever they were.

A. No, no.

Q. Did anybody ever suggest to you that you could get a license under the Ransburg patents without taking the equipment?

A. No.

• • • • •

2 PLAINTIFF'S EXHIBIT OOOO.

WILLIAM A. DARRAH, called as a witness in behalf of the plaintiff herein, having been first duly sworn, was examined and testified as follows:

Direct Examination by Mr. Meroni.

Q. Please state your name, Mr. Darrah.

A. William Austin Darrah.

Q. And where do you reside, sir?

A. 901 North Oak Park Avenue, Oak Park, Illinois.

3 Q. And that is a suburb of Chicago?

A. It's a suburb of Chicago.

Q. How old are you, sir?

A. Seventy-one, I think.

Q. By whom are you employed at the present time?

A. Lindberg Engineering Company.

Q. Does that company have an office in Chicago?

A. Yes, they do.

Q. What is the address of that company?

A. 2321 West Hubbard Street.

Q. Are you here today pursuant to a subpoena that was served on you?

A. I am.

Q. In what capacity are you associated with the Lindberg company? How do you spell that?

A. L-i-n-d-b-e-r-g. I am vice-president.

Q. Are you in charge of any particular phase of the business?

A. Not particularly. It covers quite a phase.

Q. In general what are your duties?

A. Well, you might class them as executive.

Q. How long have you been associated with that company?

A. Two and a half months.

Q. And prior to that with whom were you associated?

A. Continental Industrial Engineers, Incorporated.

Q. And in what capacity were you associated with that company?

A. President.

Q. Is that company still in existence or has it merged with some other company?

A. It has merged, substantially merged, with Lindberg.

Q. How long were you associated with the Continental company?

A. Over thirty years.

Q. What is the general nature of the products of the Lindberg company?

A. Industrial furnaces, principally.

Q. Is that company a substantial concern? By that I mean does it have numerous offices and places of business?

A. Yes, they have numerous offices.

Q. Can you state some of the other offices of that company offhand?

A. They have a New York office, a Pittsburgh office, a Massachusetts office, a Los Angeles office, to name a few of them.

Q. In general what position does it have in the furnace field? Is it one of the leading manufacturers or one of the minor manufacturers?

A. Well, I think you can say it's one of the leaders.

Q. What was the nature of the products of the Continental company that you had been previously president of?

A. Industrial furnaces, principally.

Q. Now, I believe you said you were associated with the Continental company for something like thirty years.

A. Yes.

Q. Can you tell us briefly the different positions that

you had with that company during that period of time leading up to your becoming president?

A. I was president practically from the start.

Q. You were?

A. Yes.

Q. Did you have anything to do with the forming of that company?

A. Yes. I organized it.

Q. Do the products of that company and Lindberg in any way relate to electrical devices?

A. Yes. We build electrical furnaces.

Q. You build electrical controls for electrical furnaces?

A. Well, we buy those usually.

Q. But you do sell them with the furnaces?

6 A. Yes.

Q. Are they made pursuant to your specifications?

A. Well, we try to use standard controls.

Q. Prior to your organizing or going with the Continental company what did you do?

A. I was superintendent of the Noble Electric Steel Company.

Q. And how long were you with that company?

A. Oh, I should say roughly two years.

Q. And prior to that what did you do?

A. I was manager of engineering of the Ohio Brass Company.

Q. And for approximately how long?

A. Two to three years. I can't recall it exactly.

Q. And do you recall what you did prior to that?

A. I was with the Westinghouse Company.

Q. In what capacity?

A. As an engineer.

Q. An electrical engineer?

A. Well, we dealt with general engineering.

Q. And prior to going with Westinghouse what did you do?

A. I was with the Development Division of the Western Electric Company.

Q. At what plant?

7 A. On Bank Street in New York City.

Q. And how long were you with the Western Electric Company?

A. Two to three years. I can't give you the exact date.

Q. And previous to that what did you do?

A. I went to college.

Q. Where did you go to college, sir?

A. Worcester Polytechnic Institute.

Q. Did you receive your degree there?

A. Yes. I received two degrees.

Q. What were they, sir?

A. Bachelor of Science in Electrical Engineering and Electrical Engineer, which coincides with a Master's degree.

Q. Do you recall my calling you up recently and asking you if you were the inventor of a certain patent?

A. Yes.

Q. And what was your answer?

A. "Yes."

Q. And following that I had a conference with you. Do you recall that?

A. Yes.

Q. And that was at the Lindberg company?

A. Yes.

8 Q. Do you recall my asking you if you would testify in this cause as a witness?

A. Yes. I understood this was to be fact testimony and not as an expert.

Q. Are you a registered patent agent in the Patent Office?

A. Yes, I am.

Q. I hand you what purports to be a soft copy of United States Patent No. 1,958,406, issued May 15, 1934, and ask you if you can identify that patent.

A. Well, that appears to be a patent issued to me May 15, 1934.

Q. Did you prepare and prosecute the application from which that patent issued?

A. I did.

Q. This patent bears a filing date of December 27, 1926. I believe you have a copy of it before you. Can you state where you were located at that time?

A. Yes. At 901 North Oak Park Avenue in Oak Park.

Q. Were you associated with any company at that time?

A. With Continental Industrial Engineers.

Q. Please state briefly what if anything led up to your filing of this application from the standpoint of what you did before you filed it in connection with the device.

9 A. Well, I made some what you might call models of small operating devices, similar to those shown on the drawing in this patent.

Q. Where did you make those?

A. In my basement laboratory at 901 North Oak Park Avenue.

Q. Now, after you made these devices what if anything did you do with them?

A. Well, I operated them, using water and some other liquids, including oils.

Q. With what result?

A. I was able to produce very finely divided sprays of charged particles.

Q. Can you elaborate on what you mean by "charged particles"?

A. I can't tell you the diameter of the particles. They were just very fine particles. You could only see them by

directing a beam of light through them, through the space they occupied.

Q. Was the charging of any significance?

A. Well, the charging gave interesting results. You could deflect the particles by the electrical charge, deflect the path of the particles.

Q. Do you recall what voltages you used in so charging the particles?

10 A. I used various voltages ranging from, I would say, perhaps a minimum of ten thousand up to fifty thousand.

Q. Was that A C or D C voltage?

A. Principally A C. I used some D C.

How does the drawing in this patent of yours compare with the structure that you say you built and operated?

A. It illustrates it.

Q. Now, referring to page 3 of the patent specification and more particularly to lines 8 to 17, you talk about suspended particles being allowed to adhere to walls or other desired positions, "where it may be readily removed."

What if anything did you do in that regard in your work leading up to the filing of this patent?

A. Well, I was interested in finding the pattern of the spray and on accasion I added some coloring matter to the liquid and directed the charged particles to a sheet of paper in order to determine the pattern of the spray.

Q. Please state whether or not the charged particles adhered to the paper that was sprayed.

A. In part, yes.

11 Q. Now, you say you added coloring matter. What kind of pigment did you add?

A. It wasn't a pigment, it was a little red ink.

Q. Now, in the first paragraph of your specification you refer to this device as resembling an atomizer. Will you

state whereih the device does resemble or pertain to an atomizer?

A. Yes. Now, what is your question, please?

By Mr. Meroni: Read the question to the witness, please.

(Record read.)

A. I used that term because the electrical charges appeared to cause very fine drops somewhat similar to what you'd get in an atomizer.

Q. And where did that action take place in your device? That is, where were the particles broken up into fine drops?

A. The particles seemed to be formed at the points.

Q. Well, referring to your drawing, say to Figure IV for illustration, to what do you refer when you say "point"?

A. The portion marked 24.

Q. Now, in that same Figure IV what does 22 designate?

A. It appears to designate the reservoir of liquid.

12 Q. And how was that liquid in the device that you operated transferred to the point where it was broken up or atomized?

A. It passed down through the tube 23.

Q. You mean it was fed through that U-shaped tube 23 that is shown in Figure IV?

A. Yes.

Q. Now, what does the symbol "V" designate in Figure IV?

A. That indicates the source of voltage.

Q. What did you use specifically as a source of voltage in order to get this high voltage you have been talking about?

A. Most of the work was done with a small transformer.

Q. Was some work done with some other device? You say "most of the work * * *"

A. I endeavored to rectify the alternating current, but very little work was done with that.

Q. How did you endeavor to rectify it?

A. The only facilities I had available was a hot point charging to a plate.

Q. What does the term "power pack" usually signify in electrical engineering?

A. Now you are asking for an expert opinion.

13 Q. Well, I am asking you if you know what that term signifies.

A. Yes.

Q. Would you state what it signifies?

A. It signifies usually a source of direct current.

Q. Is it necessarily always direct current?

A. Not necessarily, no.

Q. What might it be?

A. Alternating current.

Q. In your career leading up to your engineering practice, when did you first have occasion to come into contact with or to know about a power pack?

A. I can't answer that. I don't know when I first came in contact with a power pack.

Q. Well, in college did you have anything to do with power packs?

A. Not as they were known as power packs, but I had to do with the equivalent.

Q. What do you mean by "the equivalent," sir?

A. Well, a source of power, alternating current.

Q. When did you first become familiar in your work either before or after you became an engineer, with the term "electrostatic"?

A. Well, that was in college, of course.

Q. In your patent you refer to an electric field.

14 What is an electric field as used here?

A. As used here it would be a conductor carrying a potential.

Q. Well, referring again to Figure IV of your drawing, where is the field located?

A. The effective field in Drawing IV is between the point 24 and the ring conductor 28.

Q. Is that field a specific type of field in electrical work?

A. I don't think there is anything unusual about it.

Q. Well, there appears to be an air gap between the two points you mentioned, namely, point 24 and the ring.

A. That's correct.

Q. How does the throw occur between those points?

A. Well, the field that was effective appeared to exist in the air space between the ring and point.

Q. In your patent, on page 2, line 31, you say, "* * * electrostatic forces cause the rapid throwing of small particles of liquid from the end of the nozzle."

Does the field have anything to do with that?

A. I had assumed that the field was the cause of that.

Q. Does voltage gradient have any significance in this regard?

A. Well, you are asking me as an expert?

Q. No, I am asking you from the standpoint of your knowledge derived from your work on this. Does voltage gradient have any importance there?

A. Possibly.

Q. Now, at the top of page 2 of the patent, Mr. Darrah, beginning in line 2, you say, "I have also found that applying potential to only one of the two terminals will permit the production of the spray outlined above, but obviously with greatly reduced volume."

Will you explain briefly what is meant by that?

A. Well, if the point were charged and the ring was not charged, I could still produce the spray, but very substantially reduced.

Q. You say you found that to be so. When did you find that to be so?

A. This work was done some thirty years ago and I can't give you any dates.

Q. Well, how did it compare with the work that you did do prior to the filing of the application?

A. Just what is your question now?

Q. Referring again to this statement, "I have also
16 found that applying potential to only one of the two terminals will permit the production of the spray outlined above * * *" my question is, how did that statement compare with what you had done before you filed your application?

A. Well, that was a statement of things I had found during the experimental work.

Q. Can you make for us a sketch of how you hooked up the apparatus in conformity with that statement?

A. Well, I think the easiest way is to refer to the drawing.

Q. All right.

A. Referring now to Figure IV again—

Q. Yes?

A. (Continuing)—we merely omit the connection to the voltage source of conductor 28.

Q. Where then were the two points or two electrodes?

A. Well, the point was charged and presumably the surrounding walls represented the other terminal.

Q. You sometimes call that a ground terminal?

A. It wasn't a regular connected-to-ground terminal, but it could be called a ground terminal.

Q. And the wall that you are referring to, is that the wall that you were spraying material on?

A. No. I used two terminals whenever I sprayed a
17 material on a sheet of paper.

Q. And where were the terminals disposed then?

A. Well, referring to Figure IV, one terminal was point 24 and the other terminal was conductor 28.

Q. And where did you dispose the paper with reference to those?

A. The point was directed horizontally—in that case perhaps more like the construction shown in Figure I—and the paper was put a few inches away from the point.

Q. Now, you referred to Figure I in your last answer because the point 24 is shown horizontally, is that right?

A. Yes, the general center line would be substantially horizontal.

Q. And you say the piece of paper was some inches away from point 24?

A. That's correct.

Q. And was it in the field?

A. Well, of course, field is a matter of indefinite extent. It could be considered to be within the field, but the field was probably very weak.

Q. And what happened when you so sprayed the paper?

A. Well, we got drops collecting on the paper.

Q. And why did you use ink?

18 A. Merely because I couldn't see where the water struck the paper.

Q. What color ink do you recall using?

A. Red ink, I think.

Q. What was the condition of the liquid with the red ink in it when it struck the paper? Was it still in liquid form, solid form, or some other form?

A. The drops were so fine you couldn't see them until they made a mark on the paper.

Q. Was it moist?

A. Yes.

Q. What if anything did you do with this device after you made these tests and observations?

A. Well, I couldn't find any or I couldn't think of any application, so I just let it rest.

Q. Well, did you try to find some application?

A. I gave it some thought.

Q. Did any application occur to you?

A. Nothing other than mentioned in the application here.

Q. Now, referring back again to Figure I, which was the device which you say you used in connection with the paper demonstration, where is the atomization point?

A. It's indicated by number 4.

Q. And is there any indication of what happened to
19 the particles after they were atomized in Figure I?

A. Well, they floated in the air for a little while and then apparently evaporated.

Q. But when you used the piece of paper what happened? Did they lodge on the paper?

A. Yes.

Q. Please state whether it would be accurate, in describing your device when you sprayed the paper, to state that the liquid particles were atomized, dispersed, and deposited on the paper.

A. That would appear to be correct.

Q. And that was the only instrumentality that was used to effect such atomization, dispersion and deposition of the liquid?

A. Well, the result was obtained, in my opinion, by the electrical field.

Q. The electrostatic field?

A. The electrostatic field.

Q. I hand you again this copy of your patent and ask you if you recall who made the drawings for the patent.

A. No, I don't know.

Q. But you do recall writing up the patent yourself?

A. Yes.

Q. I mean by that the application from which the
20 patent issued.

A. That's right.

By Mr. Meroni: I would like to have this copy of the patent marked for identification as Binks Deposition Exhibit UUU.

(Exhibit so marked.)

Let's take a five-minute recess.

By Mr. Hume: All right.

(A short recess was taken.)

By Mr. Meroni: You may cross examine.

Cross-Examination by Mr. Hume.

Q. Mr. Darrah, as I understand it, the laboratory experimentation to which you have referred in your examination this morning took place at 901 North Oak Park—

A. That's correct.

Q. (Continuing)—Avenue in Oak Park, Illinois.

A. Yes.

Q. And that is your present address, your address today, isn't it?

A. That's correct.

Q. Who actually constructed these models with which you worked?

21 A. I did.

Q. By the way, was there one model or more than one model?

A. I made various modifications, somewhat as shown in the drawing.

Q. Well, would you make one and then alter it, trying the same device in a different arrangement, or would you make a second model?

A. Well, it would probably be a second model. Well, I think it should be understood that this was over thirty years ago.

Q. We realize that, Mr. Darrah.

A. And I can't be too precise. The work was done by me personally.

Q. Did you have anyone assisting you in that?

A. No.

Q. Did anyone witness any of these experiments?

A. Yes, there were some witnesses.

Q. Do you recall who they were?

A. I have particular reason to recall that there was a Harry Kennedy, one Harry Kennedy, who visited me, an old friend from California.

Q. Do you know where he is now?

A. No, I am not sure.

Q. Do you know whether he is living or not?

22 A. I don't even know that.

Q. Is he a resident of California?

A. He was, yes.

Q. At that time?

A. At that time.

Q. Was he residing in California the last you heard of him?

A. That's right.

Q. And how long ago was that?

A. Well, that I can't answer precisely. I'd say two, three years ago.

Q. Now, do you recall whether or not you made a model which represented or was illustrative of each one of the figures shown in the drawing of the patent referred to? First we will deal with Figure I. Did you make a device of that character?

A. Something similar, yes.

Q. When you say "something similar," in what way was it similar and in what way was it different?

A. Well, what I did was to take glass tubes and draw them out to a point and then bend some tubing to a ring

and put a conductor inside of it. That was the basis of all of the work.

Now, as to exactly what was done, I can't tell you at this date.

23 Q. So that the so-called nozzle was made of glass?

A. That's right.

Q. We have referred to that nozzle as "the point" in some of your testimony here today?

A. That's right.

Q. And how big an opening did it have in the outlet end?

A. I didn't measure it, but it was very fine.

Q. Would it be in the nature of a capillary opening?

A. I'd say smaller than a capillary.

Q. Smaller than a capillary?

A. Yes.

Q. And what material did you use to insulate the electrode ring?

A. Glass tubing.

Q. Was that the ordinary glass tubing used in chemical laboratories?

A. Similar, yes.

Q. Was it just something bought on the market or something you made especially?

A. No; something I had around the laboratory.

Q. It was just the conventional tubing used in chemical laboratories?

A. Commercial glass tubing, that's right.

Q. Commercial glass tubing?

24 A. Yes.

Q. Do you recall what the size was?

A. I can't give you these things after thirty years.

Q. I realize that.

A. I'll do the best I can.

Q. Thank you, sir.

A. I'd say the outside diameter was around 3/16 to a quarter inch.

Q. And what kind of a wire did you use for the electrode?

A. Copper wire.

Q. Now, would you look at Figure I, for instance, and tell me what the disposition was of the point with respect to what we might call the plane of the loop electrode? Did it extend inwardly and beyond the plane of the electrode or did it stop?

A. Well, I tried various things. It generally was back of the plane.

Q. In other words, as you moved the outlet tip of 4 in Figure I, for instance, toward the electrode, it didn't quite get to the middle point?

A. That's correct.

Q. It stopped short of that?

A. Well, I tried it in various points.

Q. Well, was there any difference?

A. The most effective result was when it was just a little short of being on the center line.

Q. And that was being short?

A. Yes.

Q. What is the element 10 in Figure I?

A. 10 indicates a duct.

Q. Did you ever conduct an experiment employing a duct of the type shown in Figure I?

A. Approximately that, yes.

Q. Well, did you have some sort of a wall to constitute a conducting passage?

A. We had an insulating wall.

Q. What was the element 10 composed of in the experiment that you conducted?

A. You're getting quite techincal after thirty years. It was some insulating material I had on hand and I don't remember what it was.

Q. Now, did you make a model like that illustrated in Figure II?

A. Well, somewhat similar, yes.

Q. Was this the same model as the one that you have talked about with respect to Figure I or was it a different model?

A. It was a different model.

Q. And did that have a duct like the element 10 in Figure I, or not?

A. I don't believe I used the duct on that. Again, thirty years is quite a lapse of time.

Q. Yes, sir. Now, do you recall, Mr. Darrah, the disposition of the outlet openings of the respective points in the device illustrated in Figure II? Were they horizontal or was there some other disposition?

A. They were substantially horizontal, as far as I can recall.

Q. So that is it fair to say that the illustration in Figure II is substantially like Figure I except that it's a multiple arrangement instead of a single arrangement of the point?

A. And a different type of opposing conductor, number 8.

Q. The difference there being that it's more elongated?

A. That's correct.

Q. Any other difference?

A. Well, there is the obvious difference that is shown in the drawing.

Q. Now, did you make a model that conforms to the illustration in Figure III of the patent drawing?

A. We made some rought tests on that, yes.

Q. Yes.

27 A. These drawings are all smoothed and made to look nice, much better than the actual product.

Q. What caused the liquid in the mechanism shown in Figure III to feed up into the tube 13, as illustrated?

A. Well, I can only guess that it appeared to do that by capillary action when the liquid was removed from the point. That is the assumption I made.

Q. How did it get in there in the first instance?

A. I filled it and turned it over.

Q. And thereafter it seemed to feed up into the tube 13 by capillary action?

A. That is what I assumed, yes.

Q. Well, do you make any different assumptions today?

A. No. I haven't given it much thought.

Q. Have you any knowledge as to what became of these particular models that you worked with?

A. Not after thirty years.

Q. Is it by any chance possible that you still have them?

A. I doubt it very much. They are probably out in the ash can.

Q. Do you still have that laboratory that you worked in?

A. I still have the basement to the house.

28 Q. But have you made any search to see if you could find these models?

A. No. There is no point in searching. I wouldn't know where to look.

Q. Well, is it your answer to us that they are just not available any more, that they have been disposed of?

A. That's right. It wouldn't be too difficult to duplicate that.

Q. Have you any drawings, other than this patent drawing, that represents the—

A. Not today, no.

Q. (Continuing.) —models?

A. Not at this date.

Q. Have you any written descriptions of those tests?

A. Everything I have is in the patent.

Q. So that this patent is the only surviving document as to that work at that time?

A. As far as I know, that's right.

* * * * * *

11 PLAINTIFF'S EXHIBIT LLLLL.

* * * * * *

BURKE BERNARD ROCHE, called as a witness herein on behalf of the defendant, having been first duly sworn, was examined and testified as follows:

Direct Examination by Mr. Hume.

Q. Will you give your full name, Mr. Roche?

12 A. Burke Bernard Roche.

Q. Where do you reside, sir?

A. Oak Park, Illinois; 333 South Oak Park Avenue, Oak Park, Illinois.

Q. And your age?

A. 43.

Q. What is your occupation, sir?

A. The president of the Binks Manufacturing Company.

Q. How long have you been president of the Binks Manufacturing Company?

A. Since April, 1949.

Q. What is the business of the Binks Manufacturing Company?

A. The Binks Manufacturing Company is engaged in the manufacture of spray painting equipment in spray finishing systems.

Q. How long have you been employed by the Binks Manufacturing Company?

A. Since 1939.

* * * * * *

137 Q. Do you know of anyone who supplies equipment for the airless type of coating system using electrostatic field besides Ransburg?

A. One who supplies it, you mean?

Q. Yes, supplies equipment for a coating system where coating is conducted with an airless atomization procedure involving an electrostatic field for atomization and deposition.

A. Well, you are not talking, I mean, exclusive of us?

Q. Well, we know that the controversy in this suit is a question of your having something available for the market, so excluding your own availability.

138 A. No, I don't know.

Q. You don't know of anyone?

A. I don't know of anyone else at the moment, no.

Q. Have you ever heard of anyone else offering equipment for that airless type of system, offering it to the market?

A. No, I haven't.

* * * * * *

155 Q. What prompted, if you know, the decision to discontinue your experimentation along the lines of developing a compressed air type of system and deciding to experiment along the lines of an airless type of electrostatic system?

A. I left that up to our engineering and research staff. They were in charge of the project, and they made those decisions.

156 Q. So that somewhere along the line the decision was made to shift from any efforts to develop an air type over to efforts to develop an airless type, is that right?

A. We wanted, I might put it this way, we wanted a superior type. That is what we were looking for, something that was better than anybody else had, whether it was air or airless. That was the whole purpose of the project. We wanted to find an electrostatic method that was better than anybody else had. So I mean, I don't think you can necessarily confine it to whether it was air or airless on the decision to change. We didn't categorize it that way necessarily.

Q. I didn't mean to limit that or put words in your mouth. You were telling us that you did engage this outside help, is that right?

A. Yes, we decided to do that.

Q. What was your outside help?

A. Our outside help was Midwest Research Institute.

Q. They are located in Kansas City?

A. That is right.

Q. When were they engaged?

157 A. They were engaged in the early part of 1953.

Q. The early part, maybe January or February?

A. Around there, yes.

Q. Did you have a contract with them?

A. Yes, we had an agreement with them.

Q. Does the agreement set forth the nature of their research undertaking in your behalf?

A. Yes, it did as far as financially—it usually would give us some indication of what the cost would be for a designated length of time along with the equipment, of course, we might have to purchase.

Q. Did it specify the character of the type of system that you were seeking?

A. No, it didn't, I mean, we left that—it was their own findings, you might say. We just more or less gave them an open door on it, more or less for them to look in the subject deeply and see what they could come up with.

* * * * *

182 Q. Will you relate to us just what happened in your procedure of engaging them and what they did and what followed in this development of electrostatic systems for Binks?

A. Well, as I stated yesterday, we had been, prior to the time that we engaged the services of Midwest Institute, been interested in the electrostatic field and, besides that, we decided that it would be best for us to do some experimental work and, you might say, some pure research work in order to find out if there might not be effective means of spraying paint other than by means of compressed air, although if there was a means of even using compressed air that might be superior to the one we had and we were going to look into that, too.

183 Rather than attempting to do all the work ourselves, where we have so many demands on our time and with all the items we have which we are trying to improve all the time, we decided it would be best to get some outside technical assistance, which is a very common thing these days, a lot of industrial firms do it.

So we were acquainted with the Illinois Tech. here and we went to them, but they weren't able to take us at that time, and because of that fact, we asked for some recommendations. I think this was sometime in 1952. I can't designate the month.

They recommended Midwest Research Institute of Kansas City, which was relatively a new research organization but they had a good reputation.

We contacted them and they submitted a proposal which we studied and scrutinized and finally, after—I believe,

they came to Chicago first and talked the situation over with us and we decided to do some research work with them which was on a contract basis.

They submitted—well, I guess you would call it a formal contract.

• • • • •

237 Q. Well, now, what is it that you received from the Ford Motor Company originally?

A. We received a bid from the Ford Motor Company to quote on electrostatic coating equipment.

Q. Would that be—

A. That was according to Ford's specifications. That was in the latter part of 1955 when that was submitted.

Q. Had anyone in your company advised the Ford Motor Company that you were in the market to make such a quotation?

A. Not that I know of. It was just that we received this request for a quotation.

Q. But you had, prior to receiving the request for a quotation, demonstrated this particular piece of equipment, namely, the SK 661 emitter to the representatives of the Ford Motor Company?

A. Prior to receiving the quotation?

Q. Yes.

A. No, we did not.

Q. You did not?

A. No.

Q. So it is fair to say, then, that an unsolicited request for a quotation came to you through the mail

238 one day?

A. That is my understanding of it, yes.

By Mr. Hume: I will ask the Reporter to mark this group of papers Ransburg Deposition Exhibits 15-A, 15-B, 15-C and 15-D for identification.

(Thereupon said documents were marked respectively Ransburg Deposition Exhibits 15-A, 15-B, 15-C and 15-D for identification.)

By Mr. Hume: I will ask the Reporter to mark this next set of four papers as Ransburg Deposition Exhibits 16-A, 16-B, 16-C, and 16-D for identification.

(Thereupon said documents were marked respectively Ransburg Deposition Exhibits 16-A, 16-B, 16-C and 16-D for identification.)

By Mr. Hume:

Q. Mr. Roche, I hand you Ransburg Deposition Exhibits 15-A, B, C and D respectively for identification and ask you if you can tell us what those are, please?

A. This is a request for quotation by the Ford
239 Motor Company of the Binks Manufacturing Company for an electrostatic spray unit for Mercury and Lincoln exhaust manifolds. The date of the quotation is 12-1-55.

Q. That is the request for a quotation?

A. The request for the quotation, yes.

Now, do you want me to proceed on that?

Q. Yes. Tell us what the other papers are, the 15-B, C and D portions are.

A. Now, I just want to ask you one question here. I notice here that the specifications are dated the same as the request for quotation, but usually, the specifications are dated prior to the time that the request for quotation would be.

Q. You are referring to the date 11-16-55 that is on Ransburg Deposition Exhibit 15-D and the explanation you just made applies to that date?

A. That is correct. I mean, I presume that these specifications must have been submitted with the request for quotation.

Q. Well, did you, in response to the request for quotation, make a quotation to Ford Motor Company?

240 A. Yes, we did.

Q. Is that among those papers?

A. It is among these papers and we submitted, Binks Manufacturing Company submitted a quotation as of January 10, 1956. It is Binks quotation No. 56-26 covering the electrostatic paint booth and equipment for exhaust manifolds in accordance with the specifications as submitted by the Ford Motor Company.

Q. And that quotation is the document marked Ransburg Deposition Exhibit 15-C, is it not?

A. I believe that is correct.

Q. Is that the only quotation you made in response to the request for quotation?

A. No, it is not. We also submitted, on January 25, 1956, the Binks Manufacturing Company submitted an alternate to the Ford specifications covering similar equipment, the difference being that the Ford Motor Company guns and supports were replaced by three Binks electrostatic emitters, emitter field frame and supports. In other words, the alternate was according to Binks' specifications.

Q. Now I notice on the quotation that Binks sub-

241 mitted which is here as Ransburg Deposition Exhibit 15-C contains a provision that:

"The bid shall not be binding upon Binks Manufacturing Company as an offer unless and until the Ford Motor Company shall indemnify Binks Manufacturing Company and hold it free and harmless against any and all suits or causes of action which may be brought against Binks Manufacturing Company for infringement and/or contributory infringement of any and all unexpired patents by reason of manufacturing and furnishing to Ford Motor Com-

pany the device comprising the subject matter of said bid or by use by Ford Motor Company of such device."

That was a condition, was it not?

A. That is correct.

Q. And a similar provision was contained in the alternate bid that you refer to, isn't that right?

A. That is right.

Q. And on page 2 of Ransburg Deposition Exhibit 15-C, specific mention is made of the Starkey, et al. patent No. 2,685,536? That is correct, isn't it?

242 A. That is right.

Q. Were there any other letters or understandings other than these particular writings with respect to that bid or does this constitute the entire transaction?

A. As far as this transaction was concerned, as far as I know, this is complete.

243 Q. Now, I am going to hand you these set of papers which have been marked for identification as Ransburg Deposition Exhibits 16-A to -D, inclusive, and ask you if that is not another set of papers constituting a bid or a request for quotation from Ford and bid submitted by Binks in response thereto.

A. Yes, this was another transaction.

Q. Now, in the quotations given by Binks in response to this other transaction, represented in this set of exhibits, namely Ransburg Deposition Exhibits 16-A to -D, inclusive, the same condition of indemnification was included, isn't that correct?

A. Yes, that is correct.

Q. Now, in connection with this second transaction, were there any letters or understandings that you know of in connection with this transaction other than the papers that are represented in this exhibit?

A. The second transaction is covering equipment for the Cleveland Engine Plant No. 1. So far as I know, this is a complete record of the transaction.

Q. Now, were there any other requests for quotations from Ford or quotations given to Ford other than these two sets of transactions?

244 A. Those are the only two I know of.

Q. Were there any requests for quotations from anyone else other than Ford, at any time, for this type of equipment, that is, electrostatic coating equipment from Binks?

A. Not that I know of.

Q. No quotations were given to anyone else, other than these two?

A. Not to my knowledge.

Q. Now, did Ford ever give the indemnification required by Binks in these quotations?

A. My understanding is that Ford did not.

Q. Well, is there any doubt about that?

By Mr. Meroni: I must object to the question unless you are restricting it to Ford's dealings with Binks.

By Mr. Hume: Yes, I am talking about in response to these quotations.

By Mr. Hume:

Q. Did Ford ever indemnify Binks on the basis of the condition of these quotations that we have read here that you have identified?

A. Ford did not agree to the indemnification clause.

245 Q. Now, if there were other requests and quotations from anyone else or from Ford, and it is a fact that you said you have no knowledge of any others, who would know in your company if there were such others?

A. If there were any others, the parties at Binks that

would know would be Mr. George Cook of the industrial division there, Mr. Gustafsson, and Mr. Baur in the research and development department.

Q. Well, it is also very unlikely that you wouldn't know about it if there were such?

A. I probably would know about it, yes, because that is an unusual quotation and it would probably be called to my attention.

Q. After you submitted these quotations to the Ford Motor Company, as you have stated here, what happened with respect to those quotations, if anything? Did you ever supply any equipment or anything, under contract, to Ford in response to these quotations?

A. No, we did not.

Q. Did you ever hear from Ford specifically after sending these quotations in?

A. I didn't hear anything specific about it. I don't go to Detroit myself, usually, but some of our other 246 men do go who are acquainted with the Ford people, the people in our sales division, and the story I got from them is that Ford had decided not to go ahead. I definitely think—at least from what I heard from our own engineers—that the Starkey patent was a deterrent, so far as the Ford Motor Company was concerned.

Q. Who would be the individuals in your company that would have the first-hand knowledge of those discussions with the Ford representatives?

A. The party that mostly contacted the Ford Motor Company—we have more than one office; we have an office in Detroit; Ford is a good account, as are all the automotive accounts at Binks, we sell to the automotive industry, but, we have a sales specialist in Chicago by the name of Richard Hardy that frequently contacts Ford.

Many of our engineers, including Mr. Baur, have also been to the Ford Motor Company.

Q. Who would have been there in connection with the particular matter of these quotations and who could give us the facts of the conversations and reactions of Ford on this particular subject?

247 A. This particular quotation, I think it was mailed in to the Ford Motor Company. As far as remarks are concerned, I may have heard about how the quotation progressed and what happened to it, but those remarks were mostly hearsay, what I heard some of our people say, that Ford had decided not to go ahead with it.

I couldn't tell you specifically the name of the individual at Ford that said it but I did hear, from time to time, did pick up bits of information that was to the effect that Ford had decided to shelve it.

• • • • • •

256 Q. Mr. Roche, were you able to find out the date of your meeting in Detroit?

A. Yes, I was. The secretary of the company keeps a diary of events and I found that I went to Detroit to Ford on November 20, 1955.

Q. Now, I would like to get from you, please, sir, as complete as you can give it, an idea of the discussions that were had on the occasion of that meeting in Detroit.

What was the general burden of the discussions?

A. The general burden?

Q. What was the general nature of the conclusions?

A. Well, the discussions were — well, to start with, there was a patent discussion. Mr. Oster was a patent lawyer and we also had our patent lawyer present,

257 Mr. Desmond, from the firm of Gary, Desmond & Parker, and, as I recall, the principal part of the discussion was devoted to the Starkey patent which is a Ransburg patent, and to the validity of that patent.

I mentioned yesterday that there was considerable doubt

expressed as to the validity of the Starkey patent at that meeting.

Q. Who expressed that doubt?

A. Well, as I recall, both Mr. Oster of Ford and the people that represented Binks both were of that opinion.

Q. You mean Binks' attorneys?

A. Yes, and Mr. Baur also, who was present.

• • • • •

264 Q. Now, can you throw any light on why it was that the Ford Motor Company submitted the two requests for quotations to Binks for this equipment?

A. I don't know why they did and I have no idea as to why they did.

Q. Do you have any basis for knowing whether they had any knowledge of your development in the electrostatic coating field?

A. To my knowledge they had no knowledge of it, of what we had done.

265 Q. So far as you know, then, these two requests for quotations just came out of the blue without any factual foundation for them whatsoever, as far as you know?

A. That is right. There is nothing unusual about that. We had lots of requests for quotations of a special nature without any advance warning.

• • • • •

270 Q. Before this suit was filed, for how long a period had you had it in mind to bring this suit?

A. Well, as far as answering that question, I would like to say this, I wouldn't say that we had in mind 271 to bring the suit at all until at least we tried to work out an agreement by sending the letters in order to get a license from the Ransburg Electro-Coating Corporation. But in the exchange of letters we didn't make any progress at all, so it was only after we had received

these communications from the Ransburg Company that we thought that our only recourse was to bring the suit.

But I wouldn't say that I had premeditated the thought of bringing the suit. We had this equipment ready to produce and to sell, and we know that there is a good market for it, so consequently we felt we ought to try to utilize it, and the Starkey patent was in the way, was an obstacle to our doing this, so consequently we thought the best thing to do would be to see, first of all, we were going to try to get a license from Ransburg Electro-Coating Corporation.

That is why we started the correspondence, but we didn't make any headway, so we didn't have any alternative but to bring the suit.

• • • • •

296 Q. Now, how did Binks ascertain that there is a demand in the trade and in interstate commerce for the paint sprayer which they had developed and which they stood capable of manufacturing and selling?

A. There isn't any question that there is a very large demand for it and we know that from our relation with our customers.

Q. Well, that is a conclusion, Mr. Roche. I am asking you, what was done by Binks to ascertain the fact of that allegation.

A. Well, we have had, our salesmen have had inquiries for years concerning the subject of electrostatic spraying and they have asked us when we were going to get into it, because there isn't any question about the fact that there is a market for it especially where there is a heavy production in a plant.

These inquiries have come from all sections of the country.

• • • • •

318 Q. But you have no knowledge as to whether they conspired to do the acts that are charged in Section 33, do you?

I just want to remind you, Mr. Roche, that is a serious charge of conspiracy. You are a lawyer and you realize that, and you have charged a conspiracy with each other and with others, and I think we are entitled to know if you know who these others are, and I think we are 319 entitled to have you enumerate them.

If you don't know, it is very simple to say you don't know.

A. Well, I might put it this way: A client or a customer of Ransburg, if he actually wants the electrostatic method, he had no other choice but to conspire with them because he can't get it from anybody else. So consequently he would have to deal with Ransburg on it, and if he wants the electrostatic method, whether he likes it or not, he has to accept the Ransburg terms of the license. So in that sense, you might say that he is compelled to conspire with Ransburg if he wants the method. That is if he wants to use that particular method.

• • • • •

321 Q. We are not supposed to understand that your complaint here is to the effect that licensees of Ransburg are not free to buy Binks equipment?

A. I have never heard that licensees of Ransburg were free to buy anybody else's equipment, other than Ransburg.

Q. You end up here in Section 33 by saying:

"All to the detriment of the public and to the damage of the plaintiff."

How is Binks damaged by this circumstance that you have charged here?

A. Binks is damaged to a large extent because we are

prevented from producing, marketing and selling the
322 unit that we have ready to produce and sell, and it is a unit that we know would have a definite industrial market. Consequently, we cannot go ahead with our program because of the patent, the validity of which we are questioning.

So I would say that the damage is substantial, and in the future it could become more substantial.

* * * * *

344 Q. What facts, if you have any, are there that you can relate within your knowledge to support your statement that Ransburg insists that the licensees take their equipment? What have you got to support that, that is, facts?

345 A. Well, actually sometimes it isn't a question of insisting. It is just a question of what is practical and expedient. If it appeared to the customer that the only practical and expedient thing for him to do, that he was, you might say, practically forced into buying or into, you might say, leasing the Ransburg equipment or at least using, perhaps I should say, the Ransburg equipment, if that was really the only intelligent choice left open to him, it would appear to me that he was more or less forced into using the Ransburg equipment actually, even though the Ransburg management may not have deliberately insisted that he use it.

* * * * *

358 Q. Now, in this same allegation, Section 24 in the allegation:

"Capable of marketing on a large scale—"

and that you are ready to do that, I want to ask you, if you had succeeded in getting a license from Ransburg as you undertook to secure as the result of the correspond-

Gence held the past summer, as set forth in the com-
359 plaint, a license which was completely satisfactory to your own terms, what would you have sold? What would constitute the thing you would market that you would have ready for sale?

A. Well, as I understand it, you saw the demonstration the other day. I would say it was the equipment that you saw the demonstration of.

Q. Would you sell everything that you saw that was involved in that demonstration?

A. Yes, we would.

Q. For instance, the power pack?

A. Yes, sir.

Q. And the emitter heads?

A. Yes, sir.

Q. And the paint holding and feeding equipment?

A. Yes, sir.

Q. And all of the electrical connections to establish the electrostatic field?

A. Yes, sir. It would be an outright sale of those items.

Q. And the conveyer?

A. Yes, sir.

Q. And any booths that went with that?

A. The complete installation.

360 Q. So that that would be the thing that you are referring to here as being that which you were ready and capable of selling if you had gotten a satisfactory license from Ransburg?

A. Yes, sir.

Q. Are you prepared to produce and deliver that kind of equipment today?

A. Well, so far as we are concerned, there wouldn't be anything difficult about producing that equipment.

Q. Well, would you be ready to deliver it right now on an order, within a matter of weeks?

A. Yes, we would.

• • • • •

392 JOHN W. BAUR, called as a witness on behalf of the defendant, having been first duly sworn, was examined and testified as follows:

Direct Examination by Mr. Hume.

Q. Mr. Baur, will you state your full name, please?

A. John W. Baur.

Q. And your age?

A. 43.

Q. Your residence?

A. 630 Windsor Road, Glenview, Illinois.

Q. What is your occupation, sir?

A. Engineer.

Q. By whom are you employed?

A. Binks Manufacturing Company.

Q. What is your educational background, Mr. Baur?

A. I have a degree of mechanical engineering from
393 the University of Illinois, 1935.

Q. How long have you been employed by the Binks Manufacturing Company?

A. I was employed by them on July 14, 1941.

Q. Starting in 1935 when you got your degree in engineering, tell us just briefly what your work was from that period up to the time you became affiliated with the Binks Company?

A. I worked as a mechanical engineer on design work for the Johnson Fare Box Company.

Q. Starting in 1935?

A. Right.

Q. How long did that continue?

A. Until I left to become employed by the Binks Manufacturing Company.

Q. Straight through until 1941?

A. That is right.

Q. What were your duties with the Johnson Fare Box Company?

A. As an engineer in the design and development work, and also definite straight production engineering work.

Q. Did that include research work?

A. Yes.

394 Q. Are you an inventor, Mr. Baur?

A. Of a sort.

395 Q. Do you hold patents in your own name?

A. I do.

Q. About how many patents do you hold?

A. That is a hard question. I imagine at least fifteen, in that vicinity.

Q. What were your duties when you first went to the Binks Company?

A. I worked in development and design for the standard equipment.

Q. When you say "standard equipment," what are you referring to?

A. Spray guns, air and fluid regulators, oil and water extractors, pressure containers or paint containers, hose fittings, pumps. That would be a general cross section. There may be others which we do have in our catalog.

Q. How long did you stay in that particular job where you were working in development and design for the standard equipment?

A. I still in effect consult and work along with the individual people in the department yet.

Q. What is your present title?

A. Chief engineer, standard equipment.

396 Q. How long have you had that title?

A. Approximately five years.

Q. When you acquired that title, did your responsibilities change from what they had been?

A. Very slightly.

* * * * *

408 Q. Tell us what you know about the circumstances leading up to and the making of whatever decision was made to embark upon a research program toward the end of securing for Binks an electrostatic coating system.

A. Through the discussions that started back relatively early in the '40's, we finally decided after the press of the war and the retooling of a lot of our bigger manufacturers that we could spare and could have the additional time to put forth some effort in that, and I think we made the recommendation to management—

Q. When you say "we," who is "we"?

A. Mr. Gustafson, the head of the department, you could say, made the recommendation to management to allow an appropriation or allow us to spend the money to see what could be developed and made.

409 Q. What was the objective of the research to be undertaken, to get what?

A. A marketable method of coating objects in production regardless of whether it was electrostatic or any other method.

Q. You already had a very highly commercial method in the air guns that were being manufactured and sold at that time, isn't that right?

A. That is true.

Q. And this was to be different from what you then had?

A. It didn't necessarily have to be different.

Q. But improved?

A. Improved.

410 Q. In which direction was the line of improvement being sought: In the line of saving of paint or improvement of the coating that results?

A. I would say along both lines.

Q. Was there a real and existing need for improvement in both lines at the time?

A. I would qualify that and say there was in that in some cases the straight normal spray gun is very wasteful. In other cases, it does a very excellent and efficient job.

Q. It is true, isn't it, that taking the air guns by and large in total production there is a very substantial wastage of paint in their use? That is a fair statement, isn't it?

A. I wouldn't say substantial in that if the gun is handled right and proper effort put forth in the operation of it, the loss is relatively small.

Q. Have you ever run any tests that reflect the efficiency of the non-electrostatic compressed air gun application of paint on various types of articles?

A. In the actual comparison, I would have to answer that no. That is if you want a specific percentage

411 answer. In the case of appearance of the finished coat with the air gun with or without the field on, the difference in a lot of cases is slight.

Q. Have you ever run any tests that could tell us, for instance, if we are painting a particular kind of article, that the recovery or use of paint that is fed to the air gun, and I am speaking now of the regular type without any electrostatic field, that could tell you how much of that paint is put on the article and how much is lost as overspray? Have you run any tests that show that?

A. No. Actually, that is a very difficult test to run.

Q. It is very difficult, isn't it, to know precisely how much paint is being fed to the gun?

A. No, that can be measured.

Q. In what way is that test difficult? Why do you say it is difficult?

A. No. 1, any paint coating you put on must still be in a fluid condition in order to flow out, regardless of what method you put it on. Consequently, the loss in weight of solvents, if you wanted to weigh it to find out actually
412 how much you put on, would have to be taken into account, and you don't know what solvents were lost before it ever hit it regardless of what method you do use. If you could weigh it immediately upon spraying, it might be possible to get an accurate comparison.

Q. You emphasize that the paint in order to function as a paint coating must be deposited wet, and that it is going to subsequently dry, and that is the factor that makes this a difficult measuring process to carry out?

A. That is right.

Q. Is it fair to say then that as far as your experience is concerned that the measurement relative to the efficiency of these various paint deposition methods is very difficult to ascertain correctly?

A. To an accurate figure, it would be.

* * * * *

471 Q. Mr. Baur, I have just been handed a two-page memorandum which bears your name in typewriting at the end, and it is addressed to Mr. Burke B. Roche, dated November 5, 1956, and it is entitled "Expenditures on Electrostatic Project."

Did you prepare that?

A. I did.

Q. Where did you get the information that is on there?

472 A. The first one I received from our cost department who keeps records of our projects—

Q. Are you prepared to say, Mr. Baur, that to the best

of your knowledge and belief the information contained on that letter is correct?

A. Yes, I believe it is correct.

By Mr. Hume: I will ask the Reporter to mark this as Ransburg Deposition Exhibit 22 for identification.

(Thereupon said document was marked Ransburg Deposition Exhibit 22 for identification.)

• • • • •

517 Q. Did you do anything in between the two meetings that involved meeting with anybody from Ford?

A. No.

Q. So that the very next contact, you might say, you had with any Ford representatives was at the engi-
518 neering meeting that occurred in the afternoon at the River Rouge plant?

A. that is correct.

Q. And there were about two men on behalf of Ford at that meeting?

A. I believe that is correct.

Q. Do you know who they were?

A. I already answered that I would have to locate their names.

Q. Were the two engineers that you met among those that attended the demonstration of your SK-661 emitter at a later date?

A. I am not sure.

Q. So that reference to the list of the names of the representatives from Ford that attended those demonstrations would not help you?

A. No, it would not.

Q. How long did that meeting last?

A. Not over a half an hour.

Q Were all of the representatives from Binks that had attended the morning session present at the afternoon session?

519 A. Yes.

Q. What was said there in that meeting as near as you can remember, and by whom?

A. We showed them our print, explaining its operation, that it was far superior to the available units that were on the market or their design due to several characteristics of it, such as the paint is never exposed to the air until it is in the atomization zone; the particular pattern it produces is a fan spray that makes it easier to overlap, giving a better coverage in most cases; also that there was no centrifugal motion that acted to impart an additional velocity to the atomized particles.

They were all directed in the manner you wanted them.

Q. You mean in the sense of direction?

A. That is correct, with no velocity components.

Also, there was no mechanical motors or means necessary to turn these items which would also have to be insulated; variations in viscosity that we can operate with our type emitter are wide, while with the normal type of emitter they must be held close or good results are not obtained.

* * * * *

523 Q. So on the basis of what you regarded as known characteristics of the Ransburg system, you commented as to the desirability of your proposed Binks system or emitter, pointing to fundamental differences
524 in the two which touched upon and were germane to these operational features to which you have just referred? For instance, you have already said yours was not a rotating head.

A. That is correct.

Q. Was there any observation you made to Ford on the basis of that fact when the head proposed by Ford was rotary?

A. Yes, there was. We did point that out to them.

Q. I will ask you what difference that makes in the operation, in your mind?

A. No. 1, it requires a motor or a device to rotate it. It requires the ability to bring the power either to the motor or from the motor to the head and insulate against the high voltage.

No. 3, it does impart an additional velocity component on the atomized fluids that are coming off of the emitter.

525 Q. What feature of your proposed emitter did you point to which you represented would give you a better result on the ability to stop for a period and not have to clean up?

A. In that the paint or coating material is not exposed to the air until it finally reaches the atomization zone.

* * * * *

669 Q. Now, the next paragraph, 11, says:

"That the plaintiff"

and that means Binks here—

"in its marketing of spray equipment has ascertained that there is a demand in the trade and in interstate commerce for a paint sprayer which will electrostatically atomize paint without making use of air and, accordingly, fully developed a paint sprayer which it is capable of manufacturing and selling in order to meet the market demand."

Now, have you any knowledge tending to support the allegation that Binks has ascertained that there is a demand in interstate commerce for a paint sprayer of the airless type?

A. Very definitely, not only from a request for quotations which is of record in this case, but requests from many of our salesmen for something to offer in that

670 type of equipment.

Q. Do you know of any specific request and were they tied to the airless type as this allegation states?

A. Yes, they were tied to the airless type. The specific men that made the request, I would have to check to get the exact names.

By Mr. Meroni: Do you mean over and above the Ford one?

By Mr. Hume: Yes, over and above the Ford one. He said there were others, and we have a list of sales representatives here; would that help you in any way?

By the Witness: A request came in from most of the people. Binks has not accepted the requests and gone ahead and quoted or made any effort to quote on most of the—any of the requests, with the exception of the one.

By Mr. Hume:

Q. So, Binks has no knowledge as to whether any particular equipment could be sold or not?

A. On the requests, we knew if we could quote, we
671 would have a very big chance of selling.

* * * * *

1001 BENJAMIN J. HEDGER, called as a witness on behalf of the defendant, having been first duly sworn, was examined and testified as follows:

Direct Examination by Mr. Hume.

Q. Mr. Hedger, will you please state your full name and your residence and age, please?

A. Benjamin J. Hedger, 7107 North Nagle, Chicago.

Q. What is your occupation, sir?

A. I am sales manager for Binks Manufacturing Company.

Q. How long have you been sales manager for Binks Manufacturing Company?

A. Approximately two years.

Q. How long have you been employed by the Binks Manufacturing Company?

A. Approximately thirty years.

Q. Would you tell us what your duties were when you were first employed by Binks?

A. I was a salesman.

Q. That was thirty years ago?

A. That's right.

Q. In what capacity were you a salesman? What was your territory and what were you selling?

1002 A. It was the south side of Chicago, I was selling spray equipment.

Q. And when you say "spray equipment" what does that include?

A. Well, all types of equipment that the Binks Manufacturing Company makes, such as spray guns, pressure tanks, exhaust fans and hose connections, extractors and so forth.

Q. This equipment relates, does it not, to mechanisms for painting?

A. That's right.

Q. Was it used for anything else other than painting and coating?

A. Well, not exactly. There is oil coating and, in those days, why, we did do a little sandblasting, but, outside of that, it is mostly coating products.

Q. When you started thirty years ago, were you working directly for the company or for some jobber?

A. Directly for the company.

Q. To whom did you sell?

A. To whom?

Q. Yes.

1003 A. Well, to all in the industry.

Q. To users of the equipment?

A. To users of the equipment, that is right.

Q. Did you sell to jobbers?

A. In those days, very few.

Q. What were the changes, if any, in your position, leading up to the time you became sales manager? Just give us sort of a brief rundown of your progress and the evolution of your development, your position with the company.

A. Well, actually, from the point of salesman, why, I have been in all the departments, with the exception of actual manufacturing. I mean, I have been in the selling of the product. I have had charge of the ceramic division which is porcelain enamel. I have had charge of what we term the industrial division.

Then, I was district manager of Chicago for a great many years. So, most of it has been in sales, actually, up to the point of going into industrial sales manager. And, from there to general sales manager.

• • • • •

1035 Q. Well, now, did you have in your mind that the advent of Binks in the electrostatic field itself would make new business for Binks?

A. Well, it would create greater dollar sale, in my estimation.

Q. In other words, you would get into the business of selling power packs and the other things that were not then sold by Binks, is that it?

A. That is right.

Q. Well, when did this recommendation or suggestion by the sales department first come forward?

A. Well, I wouldn't say that it came directly from the sales department. I would say it came from the sales representatives when they would begin to hear of a new product on the market and we would be getting inquiries of why don't we do something, or, are we going to do something about this.

• • • • •

1042 Q. Mr. Hedger, I am going to call your attention to Section 9 of the pleading called cross counterclaim, filed by Binks. It reads as follows:

"The defendant, in granting such licenses under its inventions, including that of the aforesaid Starkey et al. patent, represents to the trade and in interstate commerce that it exclusively owns the patent monopoly for electrostatically depositing airlessly atomized (without com-
1043 pressed air) liquid spray particles."

Do you have any knowledge of facts that would tend to support that allegation?

A. Well, if I understand it properly, in calling on the trade, by which I mean the industry, the manufacturers, I know that the Ransburg unit is offered to them for depositing paint on their products. I don't know exactly whether that answers your question or not. For instance, No. 9—it is offered to them in a package deal, the complete setup with license and royalty payments and that I know from a number of different companies that I have personally contacted and also through my own salesmen.

• • • • •

1046 Q. Aren't you familiar with the fact that it is entirely open to the licensees to take a license from Ransburg of the type that was offered to the Binks Company where a license can be acquired without also acquiring any equipment from Ransburg?

A. No, I am not.

Q. You are not familiar with that type of license?

A. No, I am not.

Q. Does it surprise you that there was such a license?

A. Yes, it does.

Q. And you have never heard of it before?

A. No.

• • • • •

702 PLAINTIFF'S EXHIBIT MMMMM.

JAMES H. RICE, called as a witness on behalf of the defendant, having been first duly sworn, was examined and testified as follows:

Direct Examination by Mr. Hume.

Q. Mr. Rice, will you please state your full name, age and residence, please?

A. My name is James H. Rice; age 29. I live at 143 West Devon Avenue, Roselle, Illinois.

Q. What is your occupation, sir?

A. Engineer.

Q. Are you employed?

A. Yes.

Q. By whom?

A. Binks Manufacturing Company, Chicago.

Q. When did that employment start?

A. April, 1952.

Q. Would you mind speaking a little louder?

A. April, 1952.

Q. I apologize but we have all this racket around here. What is your educational background and training as an engineer, Mr. Rice?

703 A. I have a Bachelor of Science degree from the Illinois Institute of Technology. I majored in electrical engineering and—

Q. Did you have engineering experience by way of employment prior to your association with the Binks Manufacturing Company?

A. My schooling and my prior employment were, more or less, mixed together. I went to school during the night and, during the day, I worked. My father was a jobber for the Binks Manufacturing Company. During this time,

I dealt with both the engineering and sales end of the spray equipment business.

Q. Then your association with the activities of the Binks Manufacturing Company goes back prior to the time you graduated, isn't that right?

A. A considerable time.

Q. Have you ever been employed in any field other than the painting field or the equipment field that is occupied by Binks?

A. No, sir, other than part time jobs in high school and things like that, which I don't believe are involved here.

Q. When did you get your engineering degree?

704 A. In February, 1952.

Q. Following that was when you undertook full time employment with Binks, is that correct?

A. Correct.

Q. Immediately following that—it was in April, was it, in 1952?

A. Yes.

Q. What were your responsibilities with Binks when you first obtained employment with Binks?

A. I was initially assigned to electrostatic investigation.

Q. Do you know whether or not any investigation in the electrostatic field had been conducted prior to your employment there?

A. Yes, there was.

Q. What was the state of the development as it existed at the time you went there and were first employed?

A. The Binks Company had a power supply, a booth setup, a conveyor setup, and what I assumed was a complete copy of patents they obtained from a patent search previous to that time.

Q. Was any activity in progress at the time of your arrival?

705 A. There was some, but my assignment was to proceed on my own.

Q. Who was in charge of the program as it existed at the time you arrived?

A. Mr. Gustafsson.

Q. And did he have anyone associated with him, working on that project?

A. Mr. Knetel, Mr. George Knetel.

Q. Anyone else?

A. Mr. Baur and myself.

Q. Is he the Mr. Baur who is in the room and who testified this morning?

A. That is right.

Q. Anyone else?

A. The machinist and the rest of the group in the shop, from time to time, would help whenever it was needed, with whatever was needed.

Q. Now, what had been accomplished, as you observed it at the time of your arrival to start your employment?

A. I would say the status up to the time of my arrival had been, more or less, investigation and there was no real, concrete progress that had been made.

706 Q. Did I understand, then, they had not developed any equipment that was being used?

A. No, sir.

Q. Were they working at that time on electrostatic systems employing air or systems employing no air for atomization?

A. What is commonly known as the air type, the air atomizing.

Q. Is it correct to say they had not, so far as you know, up to that time, undertaken any airless type of atomization in the electrostatic field?

A. So far as I know, no.

Q. Now, what were your instructions and from whom were your instructions obtained?

A. Mr. Gustafsson and Mr. Baur more or less worked very closely together, so, my instructions came, mostly, from both of them together. In other words, there would be an informal discussion and we would decide which way to begin.

Q. Who actually hired you?

A. Mr. Roche, Mr. Burke B. Roche.

Q. Had you had any experience in working in the field of electrostatic coating prior to your employment at
707 Binks?

A. As far as selling to customers that had electrostatic installations, I had seen them and helped with them, yes.

Q. Well, had you sold to customers who had electrostatic installations?

A. Yes, sir.

Q. Was that an extensive experience or just less than an extensive experience?

A. I don't understand your question.

Q. Well, had you had a rather extensive experience, an insight through contacting many such users of electrostatic equipment or was this just an odd, remote experience that didn't give you a great deal of contact with it?

A. I would say it gave me contact in that I was studying the electrical engineering at the time I was making these contacts and I was deeply interested in the field, in that it was in my area of interest.

Q. You were, in a sense, representing Binks at that time, weren't you?

A. The way my father and I were operating at the time, we were representing ourselves and selling Binks
708 equipment.

* * * * * *

734 Q. Now, prior to May 7, 1953, had you done any work or testing on behalf of Binks with a system

735 employing the airless type of atomization? In other words, the No. 2 type as distinguished from the so-called No. 1 type?

A. What do you mean by "a system"?

Q. Well, a setup which would effect such atomization and coating.

A. Well, I say at no time in this period were we effecting a coating. We were interested in a device.

Q. It was the purpose of the device to accomplish coating, however, was it not?

A. That was the purpose of the device but, at no time did we attempt to distinguish this thing as a system, since we were only after a device.

Q. In other words, even though your total problem would involve, first, obtaining atomization?

A. Correct.

Q. And, as a second problem, causing that atomized mass of coating material to deposit as a coating. You, at this stage of the game were only concerned with the problem of a device for creating the atomization; is that what I understand?

A. That is correct.

736 Q. And you were not undertaking to determine how well it might coat?

A. We did not consider the second part of that as a problem. We considered that as having already been solved.

Q. You never recognized that as a problem?

A. No, sir.

Q. Not to this day?

A. We have found that once we have established the atomization and the charging, the second part of that is not a particular problem. It has already been solved and taken care of in previous coating systems.

740 Q. What were the consequences of these tests? What did they yield from the standpoint of your own observations and Binks' as the recipient of this in-
741 formation?

A. Well, in my own mind it merely substantiated the fact that electrostatic atomization was feasible and it was not particularly difficult to obtain.

Q. Well, it is true, isn't it, that at that time you had seen a Ransburg No. 2 system in commercial operation?

A. I believe I had, yes, sir.

Q. Did you try a disk type of emitter?

A. No, sir.

Q. In those tests?

A. No, sir.

Q. You knew of a disk type of emitter, didn't you?

A. No, sir.

Q. Hadn't you seen a Ransburg disk type of emitter at that time?

A. They didn't have a disk type emitter at that time.

Q. Did you try a bell type of emitter?

A. No, sir.

Q. But you had seen a bell type of emitter?

A. Yes, sir.

742 Q. Is there any reason why you didn't try a disk type?

A. No, sir.

Q. You just didn't think of it?

A. There was no reason to try something that was already there.

Q. Well, you knew there had been a disk type of emitter before?

A. A rotating cup is what they had used at that time.

Q. Well, is it fair to say that you regarded that as the Ransburg type and you weren't going to use it because

it was their type; you were going to try to get something else? Is that a fair appraisal?

A. No, sir.

Q. Well, is there any reason why you didn't try the bell type?

A. We felt, or, rather, I felt that it was too complicated.

Q. Well, you knew the bell type worked pretty well?

A. I had known that it was in the field, yes, sir.

Q. And you were trying to find other ways that it 743 might work, is that it?

A. In my mind, this was an investigation; not a matter of going out and taking someone else's work. We were investigating for our own information. Now, as far as we knew, that bell was working by centrifugal force.

Q. Did you report any of this work to the officials at Midwest in your initial report?

A. We made no reference in that report to any of our concrete work or anything we had actually done. We left it, actually, open to them so we wouldn't be influencing their thinking in advance.

Q. When did you first see a bell type of No. 2 emitter in operation?

A. Again, I can't say exactly when.

Q. But, you know it was prior to the time you ran these tests you have referred to, or, it came in that four month period in the latter part of 1952 and early 1953?

A. I knew of its existence. I do not know exactly what time it was, whether it was prior to my employment at Binks or afterwards, that I saw an actual installation.

Q. Did you understand how the bell type of emit- 744 ter worked?

A. I believe I did.

Q. What was your understanding as to how the paint was fed on the surface of the bell?

A. It was fed to a rotating cup, a centrifugal force held the film against the cup until it fed out to its edge.

Q. Do you know how fast the bell would rotate?

A. At that time I did not have an exact figure. I did not know how fast it could have been. They had quite a few speeds. I had no information as to the speed of that bell.

Q. What was your understanding at that time as to whether or not the centrifugal force had any effect on atomization?

A. It was my feeling at that time that if the speed was high enough, there would be a certain amount of atomization, due to the motion of the cup.

Q. And if it were below a certain speed?

A. There would still be a component. How much it would affect the atomization, I have no way of knowing.

Q. Do you have a feeling or an understanding that
745 any rotary motion would exert a component affecting atomization?

A. I don't think I would go out that far, but it would affect it in some way. Now, you are taking rotary motion. Rotary motion of what?

Q. Of the bell, I am talking about.

A. Of that cup?

Q. Yes.

A. I would say, at sufficient speeds, it would.

* * * * *

760 Q. Mr. Rice, I would like to develop a little further, if I may, some information from you regarding some of the things we touched on this morning.

You recall, I am sure, that you mentioned that during your experimental work at Binks prior to May 7, 1953, that you tried several forms of atomization of the airless type and I think you said that you conducted experiments with a knife edge emitter. Isn't that correct?

A. That is correct. That describes it as close as anything.

Q. Well, now, the only thing I am seeking to do now is to get a better picture of what that experiment was.

What is it that you call a knife? How is that constructed?

A. A knife. That is—

Q. Well, now, I don't mean to be difficult. How
761 did you feed the coating material? Was it a hollow knife or was it a solid knife and you fed it on the surface? Will you direct your answer to things of that kind so we will get an idea of what we would witness if we saw it?

A. I mean, do you want sort of a background of how it came about?

Q. I want a word picture as to what it would look like if we saw it.

A. Well, it is a simple thing. It was an ordinary knife blade and paint was either placed there or dropped there. In other words, it is feasible that this experimental work could be carried on by merely laying the paint on there and putting on the voltage which was connected to the knife.

Q. Do you have any drawings or descriptions of these tests that could be supplied to us?

A. No, we don't. The matter came from some of the patents that I had looked at during this investigation. There were references in several of these patents of different devices where they got emission—in other words, emitters of a type that emitted different materials onto a grounded
762 plate and this was merely an expression of our idea of some of these patents we got.

Q. Well, now, you actually did, as I understand your testimony, conduct an experiment utilizing a knife or a knife edge, did you not?

A. Yes.

Q. And what did you use for a knife?

A. A piece of spring, a flat spring steel.

Q. Was it thicker at one part than at another?

A. I would say it was a flat piece, as I remember, about a half inch wide and about 10 mills thick.

Q. And was it of uniform thickness throughout its width?

A. Yes. It was just a flat strip. It was clipped off of a roll of strapping material. I mean, if you are familiar with Signode strapping, it was just a piece of steel.

By Mr. Hume: Pardon me. May I have a five minute recess, gentlemen?

(Thereupon a short recess was taken.)

By Mr. Hume:

Q. Mr. Rice, as I understand your testimony, this 763 so-called knife was just a flat blade of uniform cross-section?

A. That is correct.

Q. And how long was it?

A. Well, about five or six inches, I do not recollect just—

Q. Did you actually utilize this as an emitter in conjunction with an electrostatic field and cause it to function?

A. I used it to produce electrostatic atomization.

Q. Well, now, how did you bring that about? How did you mount the blade?

A. I just mounted the blade to a clamp which was insulated from the ground, connected a high voltage source to it.

Q. Just a minute. Was the blade vertical or was it horizontal?

A. It was laying horizontal.

Q. Horizontal. Did it have the edge facing toward the field?

A. It was the field. There was no facing the field.

Q. It was the electrode?

A. It was the electrode in itself.

764 Q. The blade was charged, was it?

A. Correct.

Q. Did you have any opposite electrode at ground potential?

A. Other than that which is normally in the atmosphere, the earth, no, or the building.

Q. You didn't have anything that would correspond to a piece of material to be coated?

A. No, no. Like I said before, our primary investigation was on an emitter or source of atomization. We had already felt fairly confident that the process of deposition was an entirely different factor that wasn't involved in this. We were really working on an emitter, so that the object itself to be coated was not necessary to this operation, and we followed our investigation along that line.

Q. So, you didn't undertake to set up an opposed electrode, as such, in relationship, space relationship to the emitter?

A. No, we did not.

Q. Is that true of all these experiments that you ran prior to May 7, 1953 in connection with the airless type of emitter? I mean, is it true that in all of those instances

765 that you did not use an opposed electrode at ground potential in spaced relationship other than the atmosphere and the surounding objects?

A. No; there were other times when I would put something out there to see what its influence was; sometimes grounded and sometimes not.

Q. But, in connection with this knife blade, you did not have any objects there?

A. No, sir, not when you define that as an object to be coated.

Q. Well, an object that would occupy the electrostatic

relationship that would exist when you had an object there to be coated.

A. Well, there we would have to get into a definition of an electrostatic field and what another electrode is.

Q. Let us simplify that. You will admit that any commercial application of this principle would involve an object to be coated, isn't that right?

A. What principle? I mean—

Q. Of the coating system of the type that you were exploring and trying to devise.

A. We were not trying to devise a system. That was as I said before, known to us. There was no
766 question. We had no doubts about electrostatic deposition at all. That was known, so far as I know, for the past twenty or thirty years.

• • • • •

813 Q. Now, was there any time prior to the actual achievement of the slotted disk emitter that you settled on the conclusion in your own mind that the slotted form was preferable to any other form?

814 A. I can't pick out any time, no.

Q. Well, do you recall that as a conclusion you reached at some time in the past?

A. What we were looking for was a simple device that could be made that could be manufactured easily, that wasn't clumsy and didn't have the moving parts of anything that was in existence on the market or anywhere else ond this emitter, you might say, evolved and it was shown to us it was a very simple device to make.

• • • • •

816 Q. What other factors come in when you are dealing with a commercial operation?

A. The resultant coating of your object and, in this particular application, we come into your drying effect that you were talking about before, which we noticed, actually,

the opposite of what you were inferring this morning as to a drying effect; we found there was less drying effect with this particular type of emitter.

Q. With this particular type of what?

A. With this particular type of emitter there was less loss of solvent.

Q. Than compared to what?

817 A. Than compared to any system, any atomizing device that we had used before.

Q. You refer to the air type of atomization?

A. The air type. That would be about it, right now.

Q. You don't mean any other, airless type of atomization?

A. In regards to the Ransburg system, I did not have any exact information other than what I had observed in installation. I was not free to walk into Ransburg's installation and start taking data and running tests on their equipment. I think you will realize that. But, from having observed results, we were much more successful with our device than anything we had seen.

We could operate over a much wider range of viscosities than was experienced by Ransburg. They had to use metering pumps to supply their airless type system.

Q. Well, now—

A. They couldn't use a standard circulating system or pressure regulators that we had used in our line. They

818 even requested us, at one time, to make up a special regulator to operate at the low pressures that they needed. The regulators you saw that we had used with our system are the standard type we have been using on our circulating system for years.

In other words, we could operate our device with existing equipment with very little modification. As you saw in the demonstration in our plant, the emitter was actually at-

tached to a standard automatic gun that has been in our lines for a number of years.

822 Q. How is this disk construction arrived at?
823 When you started on the program of reducing the so-called slotted emitter to practice, how did it evolve you got onto the disk and how did that come about?

A. Well, we more or less tried to simplify what is apparently a simple phenomena. In other words, it was my thinking, because of the simplicity of the factors involved here, that a complicated mechanism would not be necessary. And, as some of the emitters that have been submitted and that we have worked with were getting out of hand, it was obvious that we, as well as everyone else that we had seen in the field, were making very cumbersome and complicated devices, to make a very simple device work—in other words, knife blades work, needles work. You put paint on them and they work. Why all this rotating business?

During this thing, with the patent that is involved in here, the Starkey patent hit us when we were well along and this was much further than when we were out here (indicating). We were completely surprised by this because it has never to our knowledge, been put to practice. The
824 device they showed there, I would say, looks very crude. And, the devices of our investigations led to the thought that this was all too complicated and, as a r[illegible], we simplified everything down to only what we needed for an emitter. In other words, we reduced it to its simplest form and, as a result, we came out with an emitter that in all respects is simpler, has no moving parts.

I think the ordinary layman, in other words, an inexperienced hand in the shop, could handle it, could wash it, could assemble it, could maintain it.

835 Q. Well, yes. Now, is it not true also that comparing the type of procedure wherein you electrostatically atomize in an airless fashion and use an electrostatic field for deposition in conjunction with that that you again effect a substantial savings in paint where that system can be used over the type where air is used in the atomizing which has been referred to as a so-called No. 1 type of system?

836 A. Well, I will answer that in this way: Considering all three systems that seem to be involved in here, the air atomizing spray gun alone is one system, the air atomizing gun employing an electrostatic field, and a system employing SK-661—there are items that cannot be sprayed by all three of those systems satisfactorily. Any one of those systems might be more efficient for a particular job. In other words, if you pick out one specific item, I will say now that one or two of those systems mentioned would be applicable and maybe one or two of the remaining, depending on what it is, would be absolutely useless.

I have seen installations of the electrostatic type where the touchup that was required meant that the man doing it could have done the whole job with the same amount of paint he was using to do the touchup.

We are getting to the point, in answer to your original question, of why we didn't enter into the air gun electrostatic field alone.

The fact is that of any one of these systems, it could 837 not generally be said, "This is the cure-all." Or "This will do everything." We have had in our plant, on automatic jobs, articles that we could paint that electrostatic systems have been set up for and from our figures that we could see, we couldn't see where the savings were. There were other jobs where there were savings. So, when you ask, wasn't one system superior to another, you would almost have to take a specific installation.

840 Q. Do you think there is any advantage in going to the electrostatic operation at all, then?

A. Yes, I do.

Q. What are the advantages?

841 A. There would be advantages in the instances where the object or the installation involved fits it. It is my opinion that the system—

Q. Was that a large segment of the painting activity in the country or a small segment?

By Mr. Meroni: I don't believe he finished his answer. He started to say he had an opinion. He started to offer his opinion.

By Mr. Hume: I did not ask him for his opinion.

By Mr. Meroni: I believe you did.

Miss Reporter, will you please read the question?

(Thereupon the question was read as above recorded.)

By Mr. Hume:

Q. All right. Proceed.

A. It has been our feeling that the main trouble in the electrostatic field today is the attempt to do jobs entirely by a single system. In other words, people will put in one system, say, of an electrostatic type and they will try to do the entire job with that. It was our feeling from the

842 beginning that a blending of the systems available would be more satisfactory and that is the reason we attempted to develop the emitter of the SK-661 type, so that when we entered into this field, we would be offering the customer a complete job. In other words, there would be no holes; if it couldn't be done by one method, it could be done by another and if it needed a combination of two or three, it would be there to give to them, it would be given to them in an outright sale, which, also, we thought, was an advantage. In other words, we would be selling them the entire unit.

849 Q. You have got the information on the highest efficiency under proper conditions that could be realized with the SK-661?

A. I have an estimate in my mind, yes.

Q. What does that come to?

A. Close to 99 per cent.

Q. Is there any reason that you can think of that you would expect the Ransburg system to be any different than that?

A. I have no reason to expect it would be as effi-
850 cient as the SK-661.

Q. Do you have any reason to think it would be less efficient?

A. The reason it would be less efficient is because—

Q. (Continuing.) If it is less efficient.

A. (Continuing.) —of the ease with which the SK-661 emitter can be set up and arranged.

Q. Well, does that touch upon its performance in discharging and emitting paint? This is in paint savings.

A. No.

Q. Well, that is not germane to the economy we are talking about, then, is that right?

A. You are talking about emitting systems, emitters. I am saying that we are able, with the emitter of SK-661, to place it in a much more flexible position, so far as the position of those emitters with relation to the work. It can be done so much easier and those emitters can be placed in many positions which the Ransburg system would find it rather difficult to do.

878 Q. Well, what do you consider as essential in handling the mass of coating material in getting it in the presence of an electrostatic field such as you have been using in these tests, to make it atomize? I mean, could you, for instance, cause it to atomize right out of a bucket?

A. I don't think I would be able to, with present equipment, but it would not be impossible. I do believe that you could produce enough voltage to atomize the bulk of material and that it would do it.

879 Q. Do you think you could dip a sphere of one foot of diameter into a body of paint and electrostatically atomize off the surface of that sphere?

A. If I had a high enough voltage, I would.

Q. You have never tested anything like that?

A. One foot in diameter? No, but I observed it on smaller diameters.

Q. Did you ever make a liquid mass pass from a solid liquid phase into an atomized phase from the surface of a sphere, a spherical object?

A. Not intentionally, but I observed it occur.

Q. What kind of a spherical object did it occur from?

A. If you will look at the drawing of the wire emitter we have on Exhibit SK-509, I believe it is—

Q. I hand you a drawing SK-509 which is marked for identification as Ransburg Deposition Exhibit 26. Is that the drawing to which you refer?

A. That is the drawing to which I refer. Now, this is one of the instances I have seen this occur in. On this you will notice there is a ball shown in the upper and lower ends of this wire filament, we call it.

880 Q. What would you say the diameter of that ball is?

A. One inch.

Q. And what was it made of?

A. It was brass.

Q. Yes, sir.

A. Now, the way the material was brought into this device was: It was fed in at the top and through the wires and the wires held it by surface tension between them. Now, as you can see, if too much material flowed down, it

would get all over this lower ball. Under the influence of electrostatic field, this produced a phenomenon I have observed before I came to work for Binks, on the detearing process, which was also from a more or less rounded corner of a box, a metal box, where the material from the force of the electrostatic field was pulled off and it atomized, which is the same phenomenon we were dealing with on the emitters. In other words, it actually deteared from this surface and behaved exactly the same as the material operating off the wires.

882 Q. Now, within the commercial limits of voltages that can be used in actual practice, in order to get enough points to produce a spray of paint, or coating, such as will give you a workable, usable pattern for coating, it would be necessary to have something like a slot or film producing construction of the emitter, wouldn't it?

A. You need to produce in this atomizing voltage, gradient sufficient to break this material up. The voltage gradients are obtained by applying voltages to different classes of emitters and it has been known that whenever you create a sharp point or edge, you get a very high voltage gradient in the region of that sharp edge.

883 This voltage gradient has been estimated by some in the millions of volts per inch but it only exists in a very minute space away from the edge, in other words at the edge. How far it extends, is a very minute quantity.

So, our attempt here is merely to bring the material into a region of a high voltage gradient. Now, the problem has only been to create a geometric or physical condition that creates this high voltage gradient.

Q. In these tests that you conducted—

By Mr. Meroni: Let him finsh his answer.

By Mr. Hume: I thought he was finished.

By the Witness:

A. (Continuing.) Once we have this high voltage gradient, the next problem is merely to bring the material into this region. The problem of atomizing the liquid by the voltage gradient is not existent. In other words, once it gets in there, barring the makeup of the material—I mean, we do have viscosities and, too, different types of material that react differently under electrical fields but,

884 the normal run of materials that we have been dealing with and that we have had experience with, and as has been seen in the literature—once it has been in this electrical field of a high enough intensity, it will discharge, it will break up.

Now, the slot was a simple way of obtaining this. We created the sharp edge. We created a method of bringing the material into this field. Beyond that, the nature of the electrostatic discharge in fields, took care of itself, which has been practiced with precipitrons and other devices of that nature for a considerable number of years.

* * * * *

886 Also, with an emitter where you form saw teeth or points, you tend to fix where the emission takes place at these points.

When you use a straight edge, the emission takes place because of the nature of the voltage gradient there. The material itself that is fed into it, it is independent, it is not fixed. Now, if you put many points close together, their effect is lessened.

Q. They tend to approach a straight edge?

A. Yes.

Q. Is it compatible with your understanding that the coating material itself becomes a part of the electrode and as the points tend to form on the edge of the projecting film, that they themselves constitute these points, although they are fluid points and not fixed mechanical points?

A. No, I do not. I believe that they are part of
887 the discharge. I can clarify that more. If you take a standard electrode in air and subject it to high voltage, you get what is known as a corona discharge. This discharge forms in points. These points are not part of the electrode. We now introduce a fluid, air as a fluid—it is considered such; it is a gas form but it is a fluid. We now produce another fluid. It happens to be in what we normally call a liquid state.

Now, I can't draw any conclusion and say that because it is in this liquid state that it has become part of the electrode. It is more of my feeling that this liquid has entered into and has become mixed with this discharge and is part of the discharge rather than part of the electrode itself. The electrode is not free to move in our normal way of looking at things. It is solid. It cannot move. It cannot take place in the discharge.

* * * * *

903 Q. I will call your attention to the fact that the patent issued on August 3, 1954.

Now, you say that was brought to your attention, and, what was the result of that?

A. Well, it was given to me to read and I read through it and I didn't see where it pertained, because the nature of the device shown there is so completely different from what we had and what we were coming out with—it was cumbersome. I had never seen anything like it in the
904 field used before that time and since that time and it has not been used by Ransburg extensively in the field, to the extent where there would be any notice of it given. I don't doubt that they might have used it in their lab, I don't know, but, I don't know of any commercial application of it and my reading of this thing gave me no cause to see how it pertained. However, I am not a lawyer and do not understand the claims that were made in

this thing, as far as the sentences are quite long in the claims and it was explained to me that the project would be more or less held up until further investigation was made of this patent.

Q. Did you recognize that that was a patent covering a method and not limited to mechanism?

A. I don't recognize it as any type. In other words, I am not that familiar with patents to say this is—to me, it has pictures of a device that to me was very impractical, could not be applied in practice as successfully as what we had. And it did not occur to me that there was any method involved here. So, when you talk about a method pat-
905 ent, I really couldn't see that at all.

Q. Now, did you make any recommendations to your company after reading that patent?

A. I was not asked to make a recommendation. Patent matters are not in my jurisdiction. I do not have anything to do with the patents. My question was to look at this and, as an engineer, as having designed this equipment, compare what I saw with what I had. Where are the similarities? And where are the differences? It was my opinion that what is shown here, in practice would not work. I would say that since we recognize the fact that electrostatic atomization occurs when you put a high voltage—you create the high voltage field. You put the paint in the high voltage field and you get electrostatic atomization.

I will admit they get a high voltage field and get electrostatic atomization, but I don't see how the device can be maintained and controlled in the construction they show in this patent.

• • • • •

VOLUME II

TRANSCRIPT OF RECORD

Supreme Court of the United States

OCTOBER TERM, 1960

No. 501

BINKS MANUFACTURING CO.,
PETITIONER,

vs.

RANSBURG ELECTRO-COATING CORPORATION.

ON WRIT OF CERTIORARI TO THE UNITED STATES COURT OF APPEALS
FOR THE SEVENTH CIRCUIT

PETITION FOR CERTIORARI FILED OCTOBER 24, 1960

CERTIORARI GRANTED DECEMBER 19, 1960

INDEX.

Substituted Counterclaim 1

Substituted Supplemental Counterclaim 3

Plaintiff's Substituted Answer to Substituted Counterclaim 5

Plaintiff's Substituted Answer to Substituted Supplemental Counterclaim 16

Plaintiff's Substituted Cross-Counterclaim 31

Defendant's Substituted Answer to Substituted Cross-Counterclaim 41

Interrogatories and Answers 46

Exhibit A—Licensees of Defendant which have licenses under both the air and airless process (in answer to Plaintiff's Interrogatory No. 2(a)) 81

Exhibit B—Identification of all licenses granted by Defendant up to the date of the filing of the Complaint (in answer to Plaintiff's Interrogatory No. 3(c)) 85

Exhibit C—Identification of Defendant's licensees whose agreements have been modified (in answer to Plaintiff's Interrogatory No. 7(c)) 112

Exhibits D-23, D-25, D-26, D-29, and D-35—Five of Defendant's license agreement forms from among the forty-five forms supplied in answer to Plaintiff's Interrogatory No. 8 114

Exhibit E—List of Defendant's licensees identifying the specific license form applicable to each licensee (in answer to Plaintiff's Interrogatory No. 33) 152

Exhibit F—Patents and patent applications identified in certain of Defendant's licenses (in answer to Plaintiff's Interrogatory No. 34) 178
Exhibit G—Record of shipment of typical equipment supplied by Defendant to a licensee (in answer to Plaintiff's Interrogatory No. 36) 182
Exhibit H—Identification of licenses taken over by Defendant from its predecessor (in answer to Plaintiff's Interrogatory No. 37(b) (c) (d) and (e)) 184
Exhibit K—Identification of foreign licensees of Defendant (in answer to Plaintiff's Interrogatory No. 90(b)) 192
Exhibit M—List of Defendant's agreements under which articles were painted for the U. S. Government (in answer to Plaintiff's Interrogatory No. 190 (b) and (c)) 193
Request for Admissions and Answers 194
Memorandum Opinion on Defendant's Motion for Summary Judgment 219
Order denying motion for Summary Judgment ... 226
Stipulation re: Patents and Exhibits 226
Order for production of documents 228
Stipulation re: Publication, etc 230
Stipulation re: Letter, etc 231
Letter Mar. 4, 1955, Trageser to Amstus 232
Stipulation re: Chart, etc. 233
Stipulation re: certain Exhibits 235
Stipulation re: Defendant's knowledge of Prior Art ... 236
Letter Feb. 19, 1948, Ransburg to Simmons 237
Letter Sept. 21, 1953, Stellman to Ransburg 238
List of Patents 239
Stipulation regarding Patent Rights 243

TRANSCRIPT OF PROCEEDINGS.

Colloquy 247, 397, 412

WITNESSES FOR DEFENDANT.

Testimony of:
- Darrah, William (Deposition of) 394
- Howarth, Donald Colin 391
- Miller, Emery P. 250
- Ransburg, Harold 408, 419

Plaintiff's Exhibit KKKK—Deposition Edwin M. Ransburg 490

Plaintiff's Exhibit LLLL—Deposition of Harold P. Ransburg 535

Plaintiff's Exhibit MMMM—Deposition of Emery P. Miller 552

Plaintiff's Exhibit NNNN—Deposition of Donald C. Howarth 570
- Deposition of Milton F. Pleva 610
- Deposition of Elmer Houlberg 628
- Deposition of Paul Rothe 634
- Deposition of Clarence E. Wallin 636
- Deposition of Andrew G. Hubbard 646
- Deposition of Clarence Goltermann 650

Plaintiff's Exhibit OOOO—Deposition of William A. Darrah 652

Plaintiff's Exhibit LLLLL—Deposition of Burke Bernard Roche 672
- Deposition of John W. Baur 686
- Deposition of Benjamin J. Hedger 694

Plaintiff's Exhibit MMMMM—Deposition of James H. Rice 698

PLAINTIFF'S EXHIBITS.

V-1—Page 4 of Laboratory Notebook 721
V-2—Page 9 of Laboratory Notebook 722
V-3—Page 11 of Laboratory Notebook 723
V-4—Page 12 of Laboratory Notebook 724
V-5—Page 13 of Laboratory Notebook 725
V-6—Sheet dated May 11, 1944 of Laboratory Notebook 726
V-7—Page 15 of Laboratory Notebook 727
R-2—Memo of March 22, 1951 of Gregg Ransburg 729
S—Letter July 15, 1953, Ransburg to Acme 730
Z-1—Letter May 27, 1953, Ransburg to Ainsworth 731
BB-1—Letter May 9, 1955, Maxwell to All-Steel Equipment, Inc. 732
FF-1—Letter Sept. 22, 1953, Maxwell to All-Steel Equipment Co. 733
FF-3—Letter May 21, 1954, Maxwell to General Electric Co. 734
FF-5—Letter March 20, 1952, Stone to General Electric Co. 735
FF-6—Letter March 4, 1952, Mailly to Ransburg 736
FF-9—Letter Oct. 4, 1955, Hughes to Body 736
FF-10—Letter July 28, 1954, Miller to General Electric Co. 738
II-1—Letter Oct. 19, 1956, Johnson to Wadsworth 740
II-2—Memo, Oct. 24, 1955, Re: General Electric Co., Mattoon, Ill. 741
II-4—Hughes Memo re: General Electric, dated Dec. 16, 1953 743
II-5—Letter Aug. 20, 1951, Creps to Air-Way Appliance Corp. 744
II-6—Letter Apr. 30, 1956, Miller to Creps 745
II-7—Letter May 7, 1953, Johnson to Ransburg 747
KK—Sales Bulletin of January 19, 1953 751

NN—Sales Bulletin No. 100, dated May 27, 1953—pricing schedule 753
OO—Pricing schedule, dated Aug. 5, 1952 756
SS—Assignment of Pugh Patent to Ransburg 762
TT—Assignment between Ransburg and Brush Development Co. 765
UU—Agreement between Ransburg and Behr-Manning Corp. 771
VV—Agreement between Ransburg and Research Corporation 779
XX—Miller Memo to Patent Attorneys 790
ZZ-7—Agreement between Ransburg and Eastern Venetian Blind Co. 793
ZZ-8—Agreement between Ransburg and DuPont 800
GGG—Drawing from Ransburg Service Manuel for No. 1 Process 807
III-1—Sales Bulletin No. 132, dated June 15, 1954 809
III-3—Price Work Sheet, dated Nov. 3, 1954 811
III-4—Letter Nov. 3, 1954, Howarth to Zadoff 813
JJJ-2—Pricing Guide for No. 2 Spray Process, dated July 15, 1953 816
KKK—Letter May 27, 1953, Ransburg to General Electric Co. 819
LLL-1—Letter Mar. 23, 1954, Maxwell to Webster-Chicago Corp. 822
LLL-2—Letter May 27, 1953, Ransburg to Webster-Chicago Corp. 824
LLL-3—Letter June 3, 1953, Webster-Chicago Corp. to Ransburg 825
LLL-4—Memo of June 26, 1953, Pleva to Ransburg 826
NNN—Letter June 17, 1955, Ransburg to Westinghouse Electric Corp. 827
OOO—Letter July 26, 1955, Miller to Chicago Rawhide Mfg. Co. 828

PPP-1—Chicago Rawhide Purchase Order—No. 100410, dated Nov. 1, 1955 832
PPP-2—Letter Nov. 4, 1955, Downer to Chicago Rawhide 834
PPP-3—Ransburg Drawing No. 231,349, dated Aug. 2, 1955 835
SSS—Agreement between Ransburg and Hotpoint, Inc. 837
EEEE—Booklet entitled—"Ransburg Coating Processes" dealing with the No. 1 system and the detearing process 847
IIII—Early brochure on the Ransburg No. 2 process.. 861
PPPP—Correspondence with Behr-Manning Corporation 862
TTTT—Letter Apr. 6, 1955, Miller to A. P. Parts Corporation 876
UUUU—Booklet entitled "Ransburg No. 2 Process," Copyright 1956, 1957 877
VVVV—Letter Aug. 14, 1951, Creps to Cleveland Welding Co. 881
WWWW—Letter July 9, 1951, Maxwell to Aluminum Goods Mfg. Co. 882
XXXX—Letter Jan. 18, 1954, Ransburg to Avco Mfg. Corp. 886
YYYY—Call Report dated Mar. 11, 1949, signed by Mr. Chutter 892
ZZZZ-1—Letter July 3, 1956, Baur to Ransburg..... 894
ZZZZ-2—Letter July 12, 1956, Ransburg to Binks Mfg Co. 895
ZZZZ-3—Form for Electro-Spray Agreement..... 896
ZZZZ-5—Form for Ransburg Electro-Spray Agreement 899
ZZZZ-7—Letter July 25, 1956, Baur to Ransburg..... 904
ZZZZ-8—Binks Drawing—SK 661 905
ZZZZ-9—Letter Aug. 16, 1956, Ransburg to Binks Mfg. Co. 907
ZZZZ-10—Letter Aug. 22, 1956, Baur to Ransburg.... 908

ZZZZ-11—Letter Aug. 31, 1956, Ransburg to Binks Mfg. Co. 909
ZZZZ-12—Letter Sept. 12, 1956, Baur to Ransburg 910
ZZZZ-13—Letter Sept. 21, 1956, Ransburg to Binks Mfg. Co. 911
AAAAA—Letter Dec. 11, 1956, Ransburg to Allegheny Ludlum Steel Corp. 912
CCCCC—Letter May 16, 1952, Ransburg to General Electric Co. 917
GGGGG—Article by Boys appearing in "The London, Edinburgh and Dublin Philosophical Magazine" Vol. 23, page 490, 1887 918
Article by Zeleny appearing in Proceedings of Cambridge Philosophical Society—Vol. 18, pages 71-83 (1915) 921
Article by Zeleny appearing in "The Physical Review"—2nd. Ser. Vol. X, No. 1, pages 1-6 (July 1917) 934
Article by Nolan and O'Keeffe appearing in Proceedings of Royal Irish Academy, Vol. XXXIX, page 21 (1929) 941
NNNNN—Expenses of Midwest Research Institute... 943
QQQQQ—Midwest Research Institute proposal R,230.. 945
RRRRR—Midwest Research Institute Progress Report No. 1 951
XXXXX—Letter Oct. 17, 1956, Herman E. Miller to Emery P. Miller 955

DEFENDANT'S EXHIBITS.

No 10-A—Photo of physical exhibit No. 9 showing side view 957
No. 10-D—Photo of physical exhibit No. 9 showing paint streaming from emitter 958
No. 17-A—Chart of head atomizing unit 959

No. 17-B—Chart of Reciprocating disk atomizing unit . . 960
No. 17-C—Chart of tilting disk atomizing unit 961
No. 18-A—Photo of SK-661 emitting paint 962
No. 18-B—Photo of SK-661 emitting paint 963
No. 41—Letter Oct. 1, 1958, Downer to Avco Mfg. Co. . . 965
Letter Oct. 7, 1958, Redfield to Downer 966
Letter Oct. 13, 1958, Downer to Redfield 967
Findings of Fact 968
Conclusions of Law 1014
Order amending Conclusion of Law No. 9 1016
Judgment, entered June 18, 1959 1017
Notice of Appeal 1019
Order extending time 1020

UNITED STATES LETTERS PATENT.

No. 2,685,536—W. A. Starkley, et al., Aug. 3, 1954 1021
No. 2,794,417—W. A. Starkley, et al., June 4, 1957 1029
Re. No. 22419—J. S. Smyser, Jan. 11, 1944 1037
No. 1,360,654—E. E. Littlefield, Nov. 30, 1920 1049
No. 1,475,995—L. Heis, et al., Dec. 4, 1923 1057
No. 1,854,475—E. E. Littlefield, Apr. 19, 1932 1067
No. 1,855,869—E. Pugh, Apr. 26, 1932 1073
No. 1,958,406—W. A. Darrah, May 15, 1934 1081
No. 2,221,338—H. A. Wintermute, Nov. 12, 1940 1087
No. 2,247,963—H. P. Ransburg, et al., July 1, 1941 1095
No. 2,270,341—H. P. Ransburg, Jan. 20, 1942 1105
No. 2,359,476—C. K. Gravley, Oct. 3, 1944 1113
No. 2,417,798—H. P. Ransburg, et al., Mar. 18, 1947 1123
No. 2,651,287—R. H. Turner, Sept. 8, 1953 1135
No. 2,658,009—E. M. Ransburg, Nov. 3, 1953 1141

	Original	Print
Proceedings in the United States Court of Appeals for the Seventh Circuit		
Appendix to brief for plaintiff-appellant, Volumes I and II, see separate indices		
Appendix to brief for defendant-appellee, Volume III, see separate index		
Record from the United States District Court for the Southern District of Indiana, Indianapolis Division	511	511
Excerpt of transcript of testimony of Emery P. Miller on redirect examination	512	511
Plaintiff's Exhibit IIIII—Judgment in the case of U.S. v. Minnesota Mining and Manufacturing Co. et al., C.A. 8119 filed in the U.S.D.C. for the District of Massachusetts, dated November 6, 1950	514	512
Plaintiff's Exhibit JJJJJ—United States Letters Patent	536	533

Number	*Issued*	*Title*		
RE20,660	Feb. 2, 1938	Method of Coating and Apparatus Therefor and Product	536	533
2027087	Jan. 7, 1936	Abrasive Sheet and Process of Making the Same	548	545
2027308	Jan. 7, 1936	Manufacture of Abrasive Articles	551	548
2027309	Jan. 7, 1936	Abrasive Material	554	551
2082182	June 1, 1937	Manufacture of Abrasive Articles	562	559
2245301	June 10, 1941	Manufacture of Abrasive Articles	565	562
2279361	April 14, 1942	Electrostatic Coating Process	569	566
2287837	June 30, 1942	Method and Apparatus for Applying Coating Materials	574	571
2318570	May 4, 1943	Manufacture of Abrasives	584	581
2318571	May 4, 1943	Manufacture of Abrasives	600	597
2328577	Sept. 7, 1943	Process and Apparatus for Grading and for Coating with Comminuted Materials	614	611
2376342	May 22, 1945	Manufacture of Abrasives	625	622

	Original	Print
Record from the United States District Court for the Southern District of Indiana, Indianapolis Division—Continued		
Defendant's Exhibit 5A (Excerpts)	637	634
Page 10 of Applicant's Amendment filed June 28, 1945	637	634
Pages 14 and 29 of Applicant's Board of Appeals Brief filed January 5, 1951	638	635
Defendant's Exhibit 5B (Excerpts)	640	637
Affidavit of Gilbert Isgrigg filed March 20, 1953	640	637
Affidavit of Donald C. Howarth filed March 20, 1953	643	640
Page 15 of Applicant's Board of Appeals Brief filed May 25, 1953	646	643
Page 5 of Board of Appeals decision dated December 18, 1953	647	644
Defendant's Exhibit 6 (Excerpt)	649	645
Amendment C, filed August 3, 1956	649	645
Defendant's Exhibit 21—United States Letters Patent	652	649

Number	*Issued*	*Title*		
1854071	April 12, 1932	Method of Manufacturing Abrasives	652	649
2047525	July 14, 1936	Insulating Method for Electrical and Thermo-Technical Purposes, and Apparatus for Accomplishing the Same	657	654
2087260	July 20, 1937	Homogenous Piled Surface	662	659
2152077	March 28, 1939	Production of Piled Surfaces in Pattern Form	666	663
2166385	July 18, 1939	Determining Electrical Characteristics	676	673
2173032	Sept. 12, 1939	Production of Pile Surfaced Materials	680	677
2173078	Sept. 12, 1939	Production of Piled Surfaces	690	687
2174328	Sept. 26, 1939	Piled Surface in Pattern Form	697	694
2217126	Oct. 8, 1940	Piled Surface in Pattern Form	702	699
2218445	Oct. 15, 1940	Production of Pile Surface Materials	711	708
2222539	Nov. 19, 1940	Method of and Apparatus for Making Pile-Surfaced Sheets	715	712
2223476	Dec. 3, 1940	Method for Making Pile Fabrics	721	718

	Original	Print
Record from the United States District Court for the Southern District of Indiana, Indianapolis Division—Continued		
Defendant's Exhibit 21—United States Letters Patent—Continued		
Number *Issued* *Title*		
2231324 Feb. 11, 1941 Apparatus for and Method of Making Hat Bats	728	725
2248064 July 8, 1941 Coating, Particularly for Manufacture of Abrasives	732	729
2248853 July 8, 1941 Abrasive Article and Method of Making Same	748	745
2281558 May 5, 1942 Manufacture of Abrasive Articles and Apparatus Therefor	763	760
2356489 Aug. 22, 1944 Apparatus for Coating	774	771
2370636 March 6, 1945 Manufacture of Abrasives	787	784
2371605 March 20, 1945 Coating, Particularly for Manufacture of Abrasives	800	797
2376343 May 22, 1945 Manufacture of Abrasives	815	812
2376922 May 29, 1945 Method of and Apparatus for Making Pile Fabrics	824	821
2447374 Aug. 17, 1948 Method of Applying Coating Materials	833	830
Opinion, Castle, J.	841	838
Judgment	855	852
Clerk's certificate (omitted in printing)	856	852
Order allowing certiorari	857	853

PLAINTIFF'S EXHIBIT V-1.

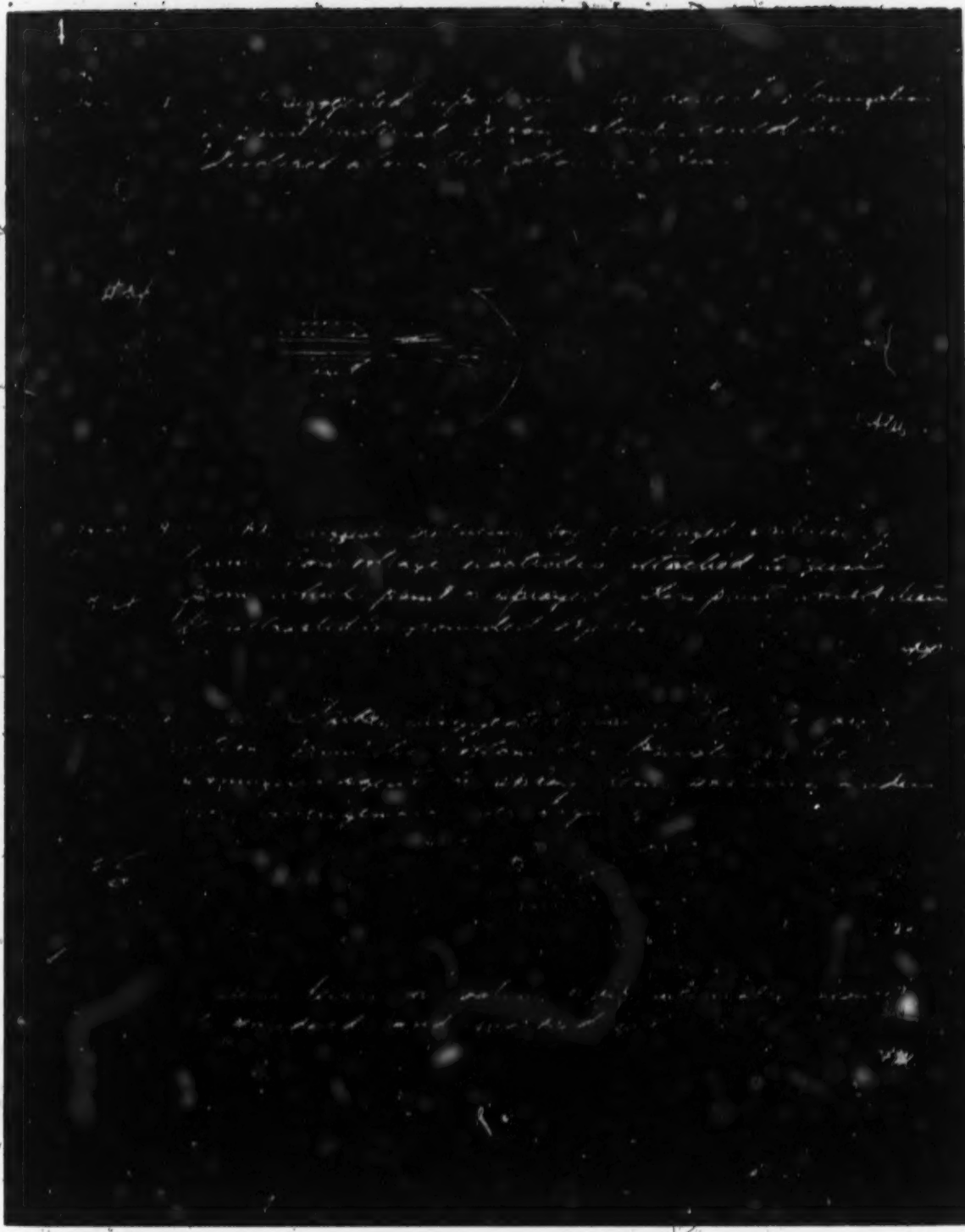

PLAINTIFF'S EXHIBIT V-2.

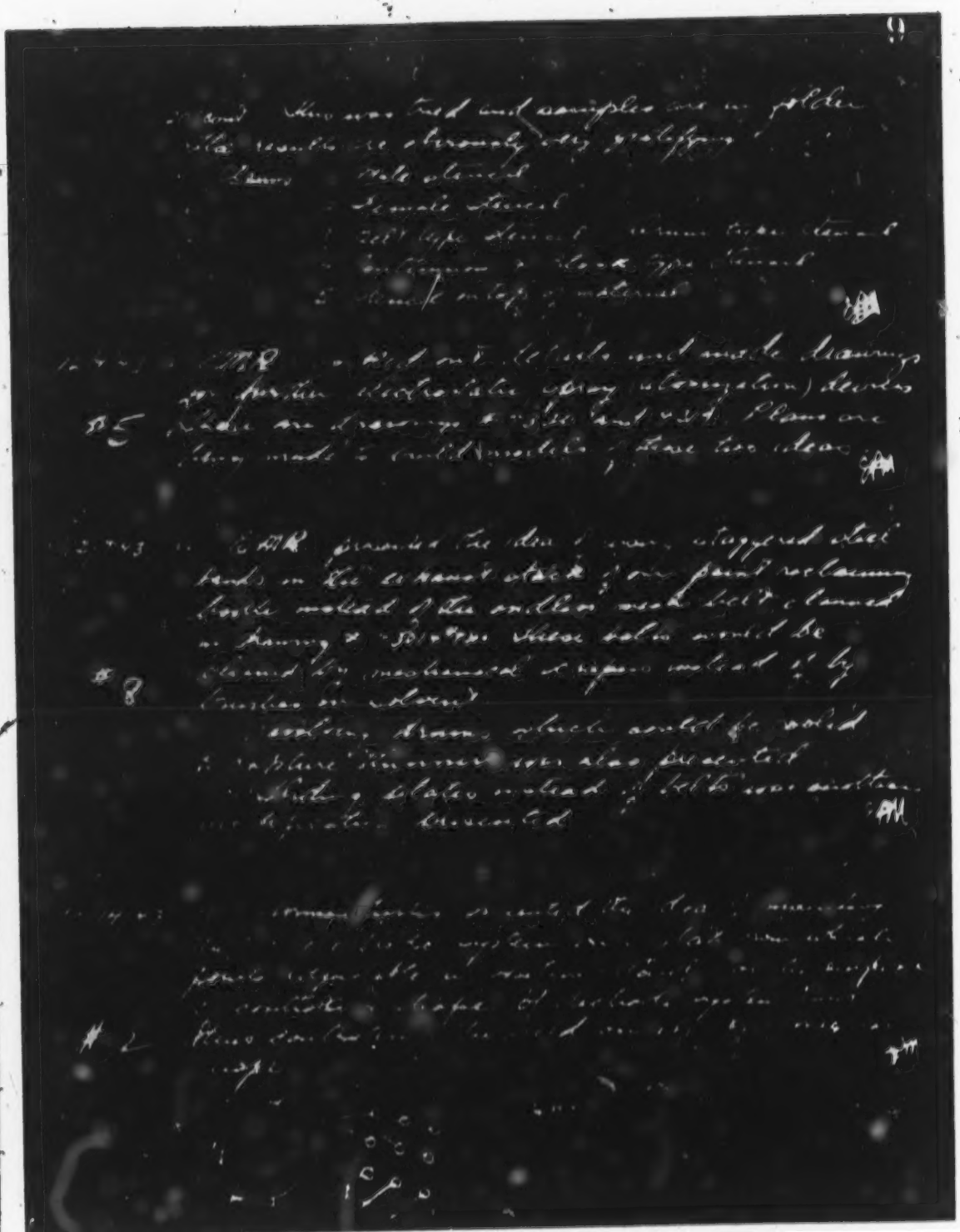

PLAINTIFF'S EXHIBIT V-3.

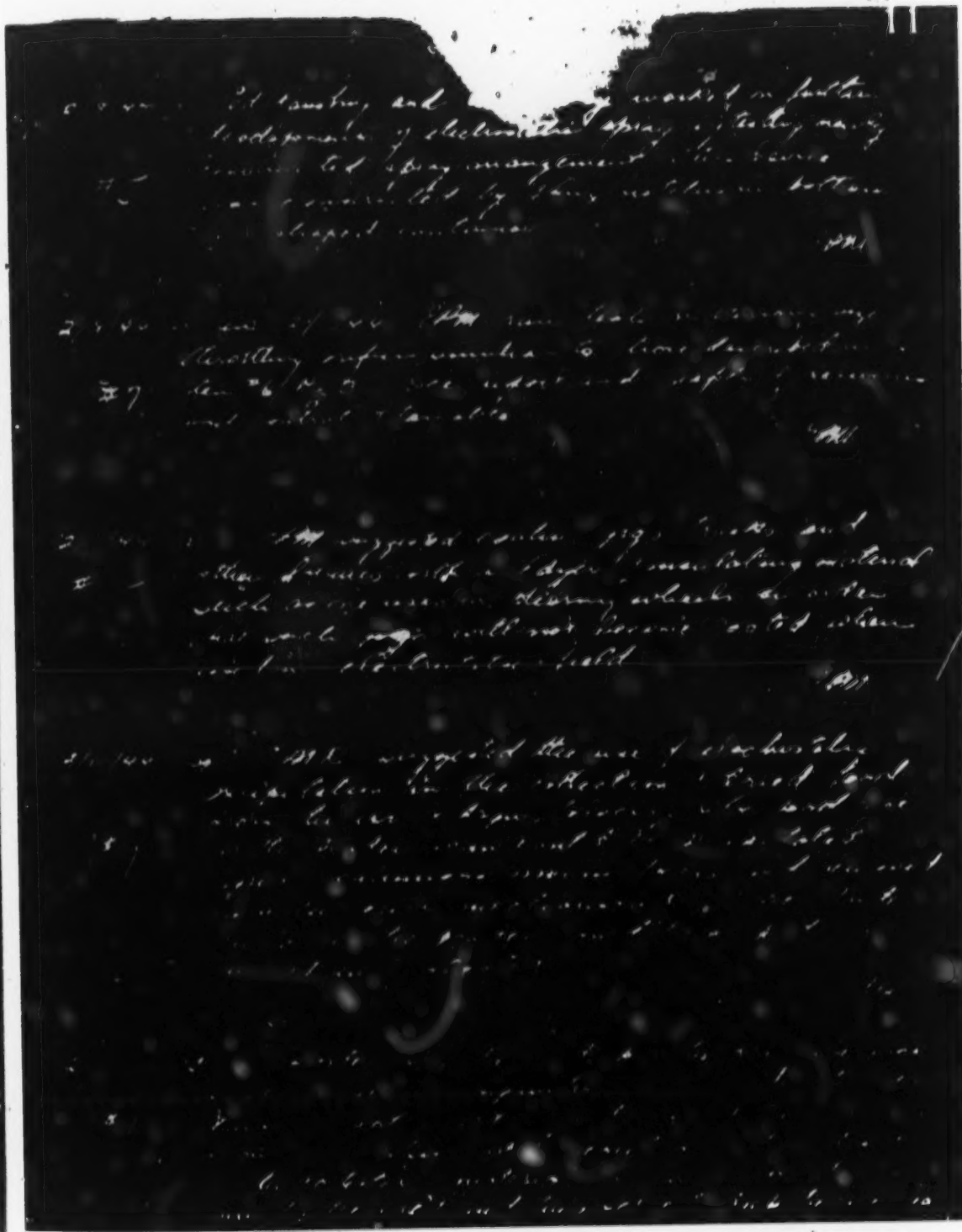

12

PLAINTIFF'S EXHIBIT V-5.

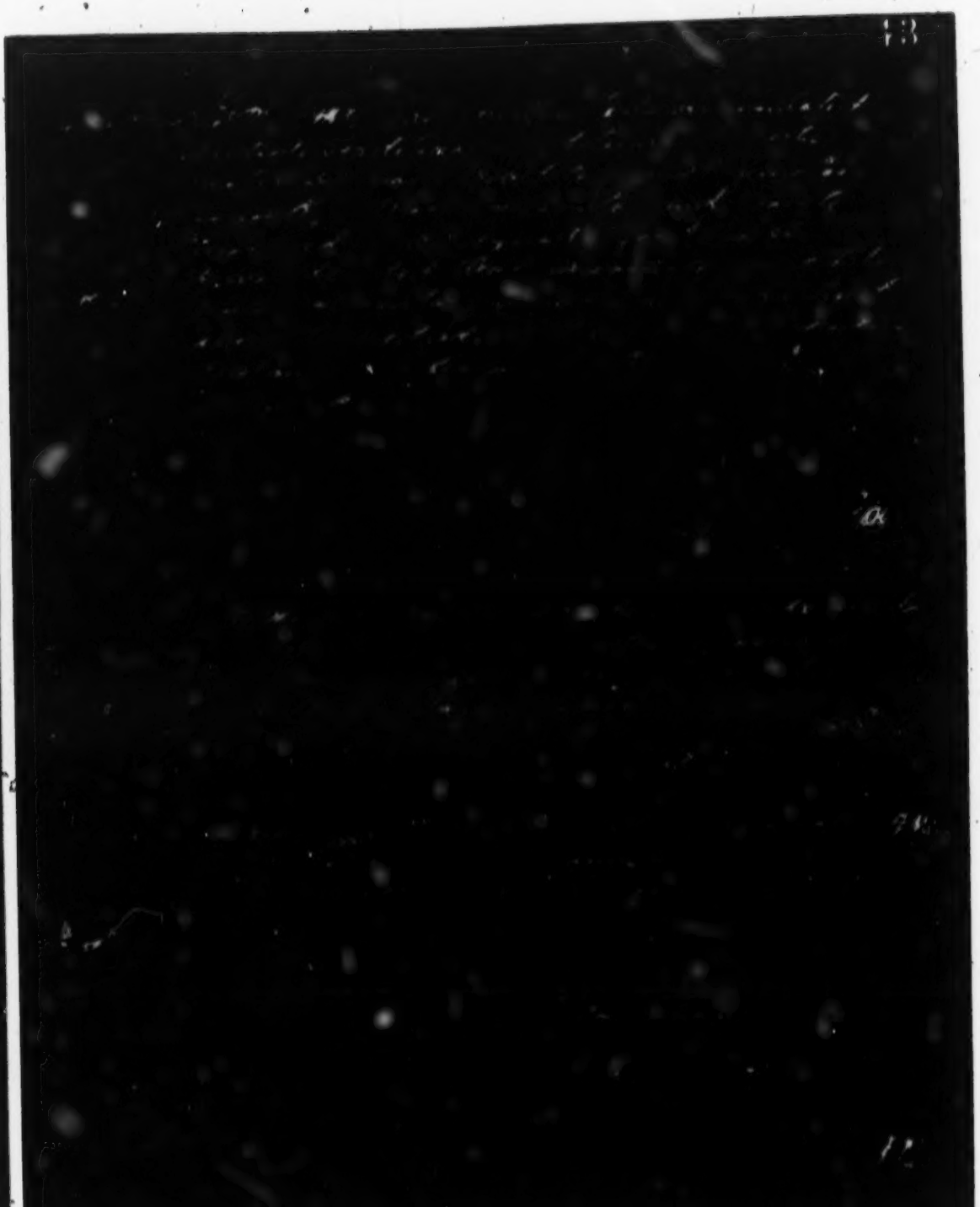

PLAINTIFF'S EXHIBIT V-6.

PLAINTIFF'S EXHIBIT V-7.

727

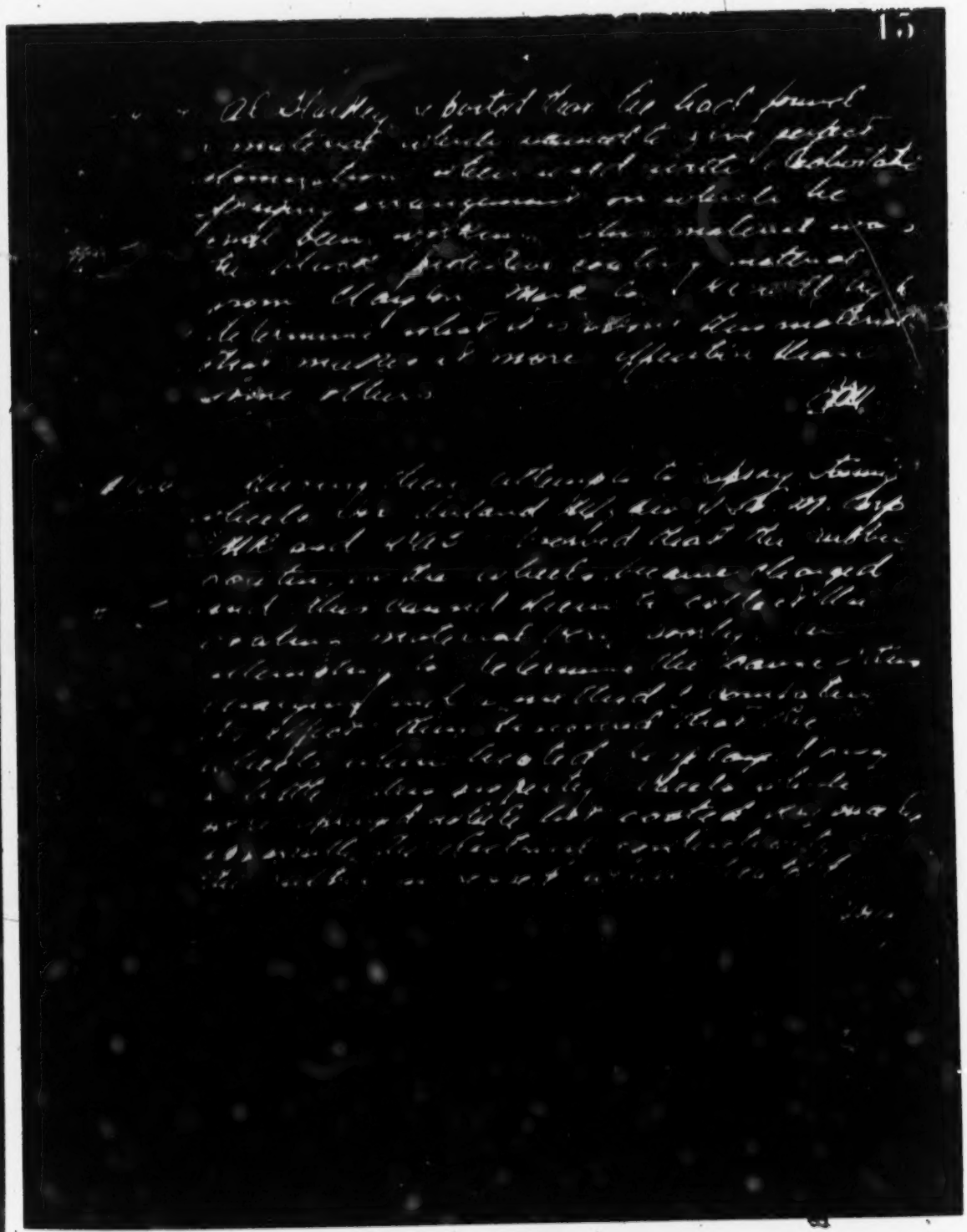

PLAINTIFF'S EXHIBIT R-2.

Harold Ransburg
Ed Ransburg

March 22, 1951

Pricing of the Electro-Coating processes with regard to the Robinson-Patman Act, as well as the Sherman Act.

In the pricing of the electrocoating processes with regard to the Robinson-Patman Act, as well as the Sherman Act, the interpretation is as follows:

In Electro-Coating we are not involved in the Robinson-Patman Act in that it specifically relates to the sale of tangible property only.

The Sherman Act is broader in that it applies to any contract in restraint of trade, which could mean that there might be some possible trouble for us if we differentiated in our pricing policy or structure or amounts between firms manufacturing competitive items.

The firms involved would not necessarily need to be competitive, but if they are the same things they should be treated the same price-wise.

For example, if we were selling to a grocery store in New York and a grocery store in California they obviously would not be competitive. However, making a price differentiation would be interpreted under the Sherman Act, as I understand it, as being in restraint of trade.

Gregg Ransburg.

GR:d

PLAINTIFF'S EXHIBIT S.

July 15, 1953

Acme Visible Records, Inc.
Crozet, Virginia.

Re: Agreement Serial No. 4729.

Gentlemen:

We are writing all of our customers to inquire whether they would prefer a license under which we would supply no equipment and assume no obligation for replacement parts, supervision and service. If, for any reason, you should prefer to provide these items for yourself or to procure them from sources other than our company and return our equipment to us, in your particular case your monthly fees would be reduced by $50.00 per month.

If you are interested in such a proposal, upon advice from you we will send our alternate license agreement.

Yours very truly,

Ransburg Electro-Coating Corp.,
E. M. Ransburg.

EMR/gim

PLAINTIFF'S EXHIBIT Z-1.

May 27, 1953

Ainsworth Manufacturing Company
2200 Franklin Street
Detroit 7, Michigan

Re: Agreement Nos. 2551, 2952 and 3143

Gentlemen:

We wish to inquire whether you would like to convert the subject electrostatic spray licenses to licenses under which we would furnish you no equipment and under which we would assume no obligation for replacement parts, supervision or service, or patent infringement indemnification. If you should elect to assume responsibility for these items for yourself and return our equipment, your basic minimum monthly fee of $100.00 for each unit would be reduced to $80.00 for each unit.

If you are interested in such a proposal, upon advice from you we will send our alternate license agreement.

Yours very truly,

Ransburg Electro-Coating Corp.

EMR/rh E. M. Ransburg

PLAINTIFF'S EXHIBIT BB-1.

May 9, 1955

All-Steel Equipment, Inc.
Aurora, Illinois

Attention: Mr. Paul W. Daley

Gentlemen:

Enclosed please find four copies of our Electro-Spray Agreement, Serial No. 5780, for the electro-spraying of your file cabinets and drawers.

The enclosed agreement provides a license to use our No. 2 Electro-Spray Process and for our furnishing certain additional items, including special equipment, supervision of its installation, and replacement parts for such equipment that becomes defective as the result of normal usage. We understand that you wish this type of agreement rather than one under which we do not furnish these additional items.

If you will kindly sign and return to us all copies of this agreement, we will then be able to sign them, retain two copies for our files, and return the remaining copies for your records. This will then permit us to go ahead with plans for your units. After receipt of these copies, shipment of the equipment will be delayed until the date specified by you. Will you kindly advise us at your earliest opportunity of the tentative date desired, so that we may plan accordingly.

We are looking forward with pleasure to further assisting your finishing operations.

Very truly yours,

JEM:eh John E. Maxwell
Enclosures
CC: Milton F. Pleva

PLAINTIFF'S EXHIBIT FF-1.

September 22, 1953

All Steel Equipment Company
Aurora, Illinois

Attention: Mr. Paul Daley
Finishing Engineer

Gentlemen:

Just a note for your personal records, on September 18, 1953, the Jones-Dabney Paint Company visited our laboratory and we conducted tests for them with the following results:

We ran three paint samples, trying to find grey metallic (non-conductive) which would not have globby appearance when applied to panels. The results were poor—atomization was poor—and globby appearance showed on all panels. The Jones-Dabney Paint Company wants to formulate additional material and return for another visit. Of course, we will be glad to accommodate them in this matter.

We ran a paint test using light grey enamel, trying to match the hand-spray sample of the same material. I will not supply you with other pertinent data regarding these tests unless you specifically request it.

I trust that everything is going to your satisfaction, and if we can be of any further help in any way please do not hesitate to call on us.

Kindest personal regards,
John E. Maxwell
Ransburg Electro-Coating Corp.

JEM:rhd
CC: Milton F. Pleva

PLAINTIFF'S EXHIBIT FF-3.

May 21, 1954

General Electric Company
Buffalo Tube Plant
1495 Fillmore Avenue
Buffalo, New York

Attention: Mr. H. J. Elias, Supervisor
Quality Control Engineering

Gentlemen:

Thank you for your letter dated May 18 requesting information pertaining to our electrostatic painting systems.

We regret to advise that our equipment would not be applicable to the application of coating a glass envelope with a black electrically conductive paint.

We have worked on this particular project with other television picture tube manufacturers, and have not been successful with our experiments.

You may rest assured that if and when we have anything which we believe to be worthwhile for the industry that we will contact you.

We appreciate your interest.

Very truly yours,
Ransburg Electro-Coating Corp.
John E. Maxwell

JEM:rhd
CC: Moine Rowland.

PLAINTIFF'S EXHIBIT FF-5.

March 20, 1952

General Electric Company
Aircraft Gas Turbine Department
P. O. Box 196
Cincinnati 15, Ohio

Attention: Mr. H. E. Mailly

Gentlemen:

This is in reply to your inquiry of March 4 regarding applying high temperature coatings. We do not feel that our present equipment would be entirely satisfactory for such an application at this time. If at a later date, we do feel we have something to offer for such an application, we shall look forward with pleasure to contacting you at that time.

Yours very truly,

Ransburg Electro-Coating Corp.

RHS:mpf

R. H. Stone

PLAINTIFF'S EXHIBIT FF-6.

General Electric Company
Aircraft Gas Turbine Department
Post Office Box 196 Cincinnati 15, Ohio
Telephone Poplar 4100

March 4, 1952

Ransburg Electro-Coating Corp.
Indianapolis 7, Indiana

Gentlemen:

I would appreciate receiving a copy of your brochure on electro-static spraying. I would appreciate any information which you may have on the application of this method to coat irregularly shaped pieces of stainless steel with high temperature coatings.

Very truly yours,
H. E. Mailly
Parts Shop Engineering

yg

PLAINTIFF'S EXHIBIT FF-9.

October 4, 1955

Body Brothers Paint Company
Bedford, Ohio

Attn: Mr. L. F. Body

Dear Mr. Body:

We received the five gallon can of your D-131 aluminum undercoater and have ran some atomization tests here last Saturday to determine how well this material atomized.

I am sorry to report that we had very little if any luck.

We ran what we call static patterns, that is, letting the bell spray against a sheet to determine the particle size and the pattern size and as we feel this is the best way to get a good picture of the atomization. The pattern was quite large—I would say approximately twice the size of an ordinary enamel from a given bell diameter.

The solvent mixes that we used were first, Toluol cut at a ratio of 4:1. This gave a viscosity of 19 seconds on a Zahn #2 cup. The atomization in this case was very poor showing large particles at the outside of the static pattern. The next mix was with methyl ethyl ketone at a ratio of 3:1 which gave a viscosity of 16½ seconds on a Zahn #2 cup. There seemed to be no noticeable improvement with this mixture as we had experienced on previous tests.

We are definitely not encouraged with anything we were able to do toward making this aluminum undercoater work for AMF Cycle. We feel that even if we were able to deposit any half way decent coating on the bicycle itself, that the inefficiency and the messy condition which would go along with it would certainly deter from its continued use. Actually, we have tried many times to work out this undercoater for several of the bicycle manufacturers and to date the results have been just about as outlined above. No luck.

On the other hand, we don't want to look over any possibilities that may come up and if you feel that we should try anything else or run any other tests, please let us have your ideas. Also, if you think that there is anything which you can do to the aluminum undercoaters which would help the situation, we will be glad to continue running tests.

Yours very truly,

R. P. Hughes

RPH:maj
cc—E. J. Sweeney
cc—AFM Cycle Co.
Attn: Mr. Jim Miller

PLAINTIFF'S EXHIBIT FF-10:

July 28, 1954

General Electric Co.
Electronics Division
Components Department
1811 Lemoyne Avenue
Syracuse, New York

Attention: Mr. Stanford R. Amstutz

Gentlemen:

We have your letter dated July 22, and wish to thank you for your interest in our Electrostatic Spraying Processes. The answer to your question as to whether or not our Processes can be used for applying a coating of adhesive to pre-cured paper-base phenolic materials is not a straightforward one. The Processes, as you undoubtedly realize, are primarily intended for the application of coating materials to articles which are of electrically conducting materials. They are also primarily intended for the application of coating materials such as paints or lacquers to articles of this type. These types of materials have a viscosity which is somewhere in the neighborhood of approximately 20 seconds when measured on a Zahn #2 viscosity cup. Both of these factors must be taken into consideration in answering the question which you pose in your letter of July 22. In the first place, I have the feeling that the pre-cured paper-base phenolic materials which you refer to are specifically of insulating character. If this is the case, our processes cannot be used on them since such materials build up surface charges which makes the operation of the equipment erratic and uncertain. Secondly, I have the feeling that the adhesives which you plan to apply to these materials are some-

what heavier than ordinary paints and here also a difficulty would be encountered. Your letter does not give us a specific answer to these two questions and, consequently, I cannot conclude with certainty our possibilities for you. I would surmise, however, that our processes would be ruled out of consideration by virtue of these two points.

I would like to call your attention to the fact that we are using our processes for the application of coating materials to paper laminated panels such as are used on the inner door liners of refrigerators. In this particular case, the panel need not have its electrically insulating properties and therefore, the laminating adhesive can be impregnated with a lamp black material which in the final formed board gives us sufficient conductivity to allow us to use our processes. Something of this character may be possible in your own particular case.

If our processes are applicable, they certainly will produce reproducable results for you as far as film distribution and thickness is concerned. We would have no difficulty in getting for you any film thickness you desire (within reason) and with reproducing this film time after time in production operation.

If you do not believe that our processes would be applicable for the above reasons, then I might suggest that you seriously consider applying the glue to these parts by a roller coat process. Such processes are available, and should be a possibility for you.

If we can serve you further, please do not hesitate to call upon us.

Very truly yours,
Ransburg Electro-Coating Corp.
Emery P. Miller.

EPM:sd

PLAINTIFF'S EXHIBIT II-1.

October 19, 1956

Mr. A. B. Wadsworth, Asst. Purchasing Agent
Allegheny-Ludlum Steel Co.
2020 Oliver Bldg.
Pittsburgh 22, Pennsylvania

Dear Mr. Wadsworth:

Dr. E. P. Miller has advised us of your inquiry concerning our patents relating to our No. 1 Process and our No. 2 Process which you are considering installing in one of your plants. We own the following patents relating to our No. 1 Process:

2,442,986	2,486,877	2,567,781
2,466,906	2,550,657	2,730,460

We own the following patents relating to our No. 2 Process:

2,651,287	2,718,477
2,658,009	2,723,646
2,658,472	2,728,606
2,684,656	2,728,607
2,685,536	2,728,689
2,695,002	2,733,171
2,706,964	2,764,712

In addition, we own the following patents in the field of electrostatic painting which are not limited to any particular one of our electrostatic painting processes:

2,247,963	2,546,701	2,724,661
2,270,341	2,551,035	2,729,191
2,334,648	2,553,724	2,730,461
2,417,798	2,559,225	2,730,988
2,421,787	2,568,611	2,731,589

2,425,652	2,632,716	2,736,671
2,428,991	2,686,471	2,741,218
2,446,953	2,650,329	2,744,033
2,463,422	2,655,128	2,748,018
2,465,128	2,662,833	2,751,564
2,509,276	2,690,730	2,751,851
2,509,277	2,697,411	2,752,883
2,509,448	2,698,814	2,754,226
2,526,763	2,703,549	2,754,227
2,531,542	2,711,155	2,761,544
2,544,806	2,723,921	2,764,125

We also have a number of pending patent applications pertaining to electrostatic painting but for reasons which you can well appreciate it is our policy not to disclose information concerning these pending applications until they have issued as patents. If we can be of any further service to you in regard to your inquiry, please do not hesitate to write us.

Very truly yours,

Ransburg Electro-Coating Corp.
Merrill N. Johnson.

MNJ:dh

PLAINTIFF'S EXHIBIT II-2

October 24, 1955

Subject: General Electric Company
Mattoon, Illinois

On October 18, RHS 'phoned Everett DeVault relative to his check of the sample lamps—per my previous conversation with him on October 14.

Everett stated that they had located samples from the different companies and that they had very carefully scraped the material from these samples and weighed them,

respectively. He said that the results of this check showed 0.9 mg. for our sample lamps, 0.92 mg. for the Paasched samples and 1.2 mg. for each of the DeVilbiss and their own present production samples.

Everett went on to say that the only factor that they could think of which made our tests different from the Paasche tests was that it was necessary for us to use a mask whereas the Paasche gun did not need a mask. He stated that these masks were not available and that it was, therefore, impossible to ascertain how much material we had sprayed onto the mask itself. I agreed with his conclusion, recalling that we did put a fair amount of material on the mask; and it certainly seemed logical that this was the answer we were looking for.

We both concluded that he was probably better off to go ahead with the Paasche spray equipment, I pointed out that it would not cost an exorbitant amount to at least try this equipment out in production. Everett admitted to a strong suspicion that the Paasche equipment may not be rugged enough for production purposes, but stated that he was planning to go ahead with it and try it out to see how they get along. He anticipates excessive maintenance costs with this equipment and said that he would not be surprised if they come back to our proposal in the long run.

Everett went on to say that they are extremely interested in going ahead with coating tests on the other lamps. He confirmed that he has already sent materials to us for test purposes.

R. H. Stone

RHS:maj

PLAINTIFF'S EXHIBIT II-4.

Dec. 16, 1953

Mr. Harold Ransburg

Dear Harold:

I have had two phone calls from General Electric in New Kensington, Pennsylvania. One of these came from Jim Gump and the second one came from George Mild. Both of these fellows are Methods and Planning Engineers and have worked on our set-ups over there.

Originally Jim Gump expressed the need for some sort of triggering system on the individual bells of the triple head. We talked somewhat about it and I explained to him that we had at one time considered this for articles which were spaced on the line but to date had not come up with any definite answers. I then dictated a memo to Don Howarth concerning this thinking, and suggested perhaps he could do something through engineering.

When George Mild called me today—that is on December 14—he was most emphatic that we try and give them something on this triggering. He realized that the means of marketing which we had was detrimental to getting any further work done on the equipment but he stated "I would go to our Vice-President and have him go the the highest man in your organization if I thought it would do any good."

I knew that you had in the past expressed the idea that we definitely needed this triggering on the individual heads and so I told him to contact you by letter as I thought this would probably help him get some of his worries off his chest.

I do not know that their particular problem is any worse than a lot of our other customers. His main complaint was

that all the other operations on the line must all tie together. If there happens to be a slight delay from any one of the other operations this reflects directly at the painting station. Consequently, there is a gap of anywhere from one minute to five minutes of pipe on the line and when they try to shut our equipment down and start it back up again then they have ruined quite a few links of conduit.

Just wanted to fore warn you a little bit about the letter which he will undoubtedly write and I believe it will be very conservative but at the same time very emphatic.

Red

RPH/dj

PLAINTIFF'S EXHIBIT II-5.

Formerly at

Now at P. O. Box 116
Bay Village, Ohio
Phone TRinity 1-0062

August 20, 1951

Air-Way Appliance Corp.
Auburn Ave.
Toledo, Ohio

Attention: Mr. G. M. Burmeister
General Manager

Dear Mr. Burmeister:

Enclosed is a Ransburg Electro-Coating brochure which depicts the theory and operating data on five initial installations of an amazing new process for automatic electrostatic spray painting.

This process designated as "No. 2," in contrast to the well known Ransburg electrostatic spray using conventional spray guns, employs a special type of coating equipment

which is furnished completely by the Ransburg Corp. All that the user needs to supply is the conveyor, workholders and ventilating means.

The efficiency of the new development—in many instances exceeds 99%. There is no overspray to be exhausted. The ventilating means is to carry away the thinner vapors.

Complete laboratory facilities at Indianapolis are available, at no obligation to you, to run simulated production on your parts using your own paints or coating materials. Any item whose production volume justifies consideration of a conveyorized operation may be an application.

Since talking to you in Toledo Friday, I find that I will be in Toledo again on Friday, August 31st, and at that time will contact you to discuss further the No. 2 process.

Very truly yours,

Darrel

Darrel E. Creps

A Distributor for

DEC/s Ransburg Electro-Coating Corp.

CC—to Mr. R. H. Stone

PLAINTIFF'S EXHIBIT II-6.

April 30, 1956

Darrel Creps
Alside, Inc.
Akron, Ohio

Dear Darrel:

You will recall that we discussed the subject company during my recent visit with you in Lima. Upon returning to the office, I have further discussed this matter with Don Howarth. I will try in the following to summarize our opinion concerning it for you.

Darrell, the last visit that we have any record of having made to the subject company was made by Frank Perdue just about a year ago. At that time he said he called at the plant and talked to Mr. Mentall and everything was OK. There is no indication that he saw the equipment nor that he was allowed to see it. In connection with their No. 2 Process, both Don and I feel as though it would be useless for us to demonstrate to them what we could do with this process so long as they are forced to run the parts in the manner which they do now. We are afraid that they would be constantly having headaches with regards to getting uniformity and we feel quite certain that this would be a very pertinent factor in their operation.

In addition to this single fact of lack of possible adequate uniformity, we feel that the additional initial fee to make a change to our No. 2 Process would certainly cause them to have a fit since we are well acquainted with their attitude.

In adition to the initial fee, there is also the question of the monthly fee. At the present time, they are paying us approximately $700.00 and are using somewhere in the neighborhood of $14,000.00 worth of paint per month. This means that if they were to put in our No. 2 equipment, they would obviously owe us approximately twice the monthly fee that they are paying at the present time. I can just hear Jerry Kaufman if this situation were brought to his attention. Another factor which is quite pertinent under these circumstances is that we would, therefore, have to save them approximately twice as much coating material as we are now doing in order to justify our existence with the No. 2 Process. I think that our operation at their plant with our No. 1 Process canot be too inefficient. In order to pick up another $700.00 or $800.00 per month, our No. 2 Process, obviously, would have to be quite efficient when compared with the No. 1 Process which they now

have installed. I am not sure that this would be a possibility for us.

In view of the above, I believe that we should tell Jerry that any of our users on this particular type of item are running the parts parallel to their length through the spray zone and then conveying them through the oven in the other direction.

If he can do this, I think that we could do a job for him and obtain satisfactory parts and uniformity. If he cannot do this, I do not believe that he should be interested in the No. 2 Process.

The above reasons are sufficient to justify his continuing to use the equipment which he has.

We may want to discuss this further when you come to Indianapolis.

Emery P. Miller

EPM:ab

PLAINTIFF'S EXHIBIT II-7.

Altex Corporation
200 West Olive Street
Milwaukee, Wis.

May 7, 1953

Mr. E. M. Ransburg, Vice-President,
Ransburg Electro-Coating Corp.,
Barth and Sanders,
Indianapolis 7, Indiana.

Dear Mr. Ransburg:

I am directing the enclosed check and this letter to you for the purpose of clarifying the record and in the hope that when the facts are obtained by yourself regarding this installation, something can be done to answer our questions and make the necessary corrections to produce a satisfactory job.

We are paying the account in full as you will note, but we do not believe the monthly fees as charged to us are commensurate with the service received and we have expressed this matter in several letters without any answer, other than the curt letter of Mr. D. C. Howarth of April 28th which gave us an ultimatum and dodged our questions in previous letters. All Mr. Howarth had to do was to answer the last two paragraphs of our letter of April 8th and we would have complied with our promises to Mr. Pleva. It was not necessary for Mr. Howarth to outline justification of his stand without recognizing the facts. It is my firm belief that you do not overcome difficulties by refusing to admit they exist.

It is evident that neither Mr. Lueder nor Mr. Pleva reported the conditions at our plant, or Mr. Howarth has chosen to ignore a part of their reports. We are convinced that both Mr. Lueder and Mr. Pleva are cognizant of the following:

1. The first problem of painting of major difficulty was dust. It remained for the paint salesman, Mr. Carl Zipprich, and the Reynolds Aluminum salesman, Mr. Victor Krause, to point out that the electro static charge also charged dust particles and rapidly deposited them upon the product. It was at their suggestion that we put in air conditioning.

2. The difficulty of getting proper thickness of paint without strings on the bells was properly solved by the American Marietta representatives. However, it was found that with the heavy pigment paint that was furnished to your office by American Marietta at the time the experimental panels were run, it required shutting down the line every half hour to clean the bells. This no doubt was not reported and each time we shut down the bells, there was not only loss of production, but the creation of scrap.

3. It was not until we run with the supervision of Mr. Zipprich and their paint expert that we found we were not

able to get uniform thickness across the panel. Mr. Lueder may have known this, but it was never expressed to us. To our knowledge, a check was never made in different localities of the panel until Mr. Zipprich made them and informed us that some other arrangement would have to be set up on positioning of the bells to do a good job of painting. In two of our letters you will find reference to our request for information as to the proper position of these bells to the product. These questions have been ignored by your organization.

4. At the time the test panels were run in your plant, we were informed that the butt end could not be properly painted with your system, but the upper lip that consists of a 3/8 offset at a 60 degree angle could be properly coated with the system outlined by your company. We pointed out to Mr. Lueder and Mr. Pleva that while this could be done on one of the panels, the other panel which was at the outer rim of the spray zone did not get its proper deposit of paint. We have overcome this somewhat in the past few days by using a heavier coat of prime, but this is not good practice because of the nature of the primers employed. It enables us to get a very nice finished job with partial covering of this 60 degree offset and so we have worked out one method to get along for the time being.

We, therefore, have instructed the American Marietta Company to work out a prime that could be used as a heavier roller coat using the electro process for just a light finish. You can see from our point of view that while we are making what looks to be a satisfactory product on the surface, we will not be satisfied until we know that the life of the finish will be equal to the representations made by the manufacturers of the paint. From our observations in the past ten days, we believe that with the proper positioning of the bells and further tests on prime roller coats, we will be able to work ourselves out of our difficulties.

In this connection we wish to refer you to the second paragraph on page two of Mr. Howarth's letter of April 28th regarding the charges for supervisors. We can assure you that we will not require the services of Mr. Lueder or Mr. Pleva in the future and whenever one of your top service managers is in this area, it might pay him and your company to investigate some of the samples of the product taken off the line, not due to dust. It would pay him also to check with representatives of the American Marietta Company who have been invaluable in aiding us in getting to the place we are today.

I regret this long letter and the necessity of bringing it to your attention and we are paying the full amount knowing that you, as a top executive, will see that we are properly reimbursed for a portion of the monthly fees that may be in accordance with the letter of the contract, but certainly not fair in accordance with value received.

Yours very truly,

Altex Corporation,
W. G. Johnson,
President.

W. G. Johnson
MJ

PLAINTIFF'S EXHIBIT KK.

Ransburg Electro-Coating Corp.
Bulletin to Distributors

January 19, 1953

Subject: Trend Toward Leasing Equipment

Gentlemen:

In "Steel" Magazine, January 12 issue, we note the following:

"Gravity and belt conveyors are available on lease under a new rental plan announced by James R. Sebastian, President, Rapids-Standard Co., Inc., Grand Rapids, Mich. This enables firms to install and use the equipment without making a major capital investment. The lease plan is currently available in Chicago, Philadelphia, New York, Buffalo and Grand Rapids."

The following is quoted from "Metal Working Outlet," January 19 issue:

"The trend is to lease, instead of sell, the more expensive capital equipment is gaining momentum. Yale & Towne Mfg. Co. and Automatic Transmission Co. have both just worked out plans to lease their industrial trucks through C.I.T. Corp., the industrial financing subsidiary of C.I.T. Financial Corp. Both manufacturing firms also have corollary plans for users of their equipment who wish to purchase it on installment terms rather than lease."

You may recall discussions in our Sales Meeting of other industrial equipment being put out on a rental basis in Chicago, including large, heavy equipment. Reo Motors is setting up a new company with 18 offices and 1800 trucks to operate on a lease arrangement. Our automatic paging

system we rented from the Telephone Company—no capital investment—no mechanical worries.

On some occasions where strong aversions to royalties are noted, it is well to be aware of this new trend. It would appear obvious that the only reason for the existence of such leasing systems is to save companies the large capital investment for such equipment. Our terms accomplish the same purpose.

It is also important to realize that our initial fee is an expense item. All corporations can pay for it with a 47-cent dollar and if they are in the Excess Profits Tax bracket, they can pay our initial fee with a 23-cent dollar. Their investment is therefore very light and their 30-day cancellation privilege helps us insure all customers against getting stuck with some equipment for which they might not have permanent use.

Harold P. Ransburg

HPR:ch

PLAINTIFF'S EXHIBIT NN.

Ransburg Electro-Coating Corp.
Indianapolis, Indiana

Bulletin No. 100

May 27, 1953

Subject: Pricing Guide

No prices should be considered as a firm quotation until confirmed with the home office. The following may, however, be of assistance in giving more accurate preliminary estimates.

Detearing Process.

With Equipment, Installation Supervision, Replacement Parts & Service:

Initial Fee $3400 per unit
Monthly Fee $50 plus $125 for each 200 (or fraction) hours of usage
Initial Fee $5400 if TWO units operate from one pack
Monthly Fee $50 plus $250 for each 200 (or fraction) hours of usage

Without Equipment, Installation Supervision, Replacement Parts or Service:

Initial Fee $2000 per unit
Monthly Fee $37.50 plus $125 for each 200 (or fraction) hours of usage
Initial Fee $4000 if TWO units operate from one pack
Monthly Fee $37.50 plus $250 for each 200 (or fraction) hours of usage

No. 1 Spray Process.

With Equipment, Installation Supervision, Replacement Parts & Service:

Initial Fee $3000 plus $300 for each spray gun used
Monthly Fee $100 plus: 10% of cost of paint used up to $4000 monthly usage
5% of cost of paint used from $4000 to $8000 monthly usage

Without Equipment, Installation Supervision, Replacement Parts or Service:

Initial Fee $1200 plus $300 for each spray gun used
Monthly Fee $80 plus: 10% of cost of paint used up to $4000 monthly usage
5% of cost of piant used from $4000 to $8000 monthly usage

Number 2 Process.

Approximate Pricing Schedule.

Bulletin #100.

Mar. 6, 1953.

Number of				Initial Fee		Minimum Monthly Fee	
121 Single Heads (1 Pedestal)	Triple Heads	Pump Units	Power Supplies	Non-Cond. Paint	Cond. Paint	Non-Cond. Paint	Cond. Paint
1	0	1	1	4700	5600	150	150
2	0	1	1	5600	6500	150	150
3	0	1	1	6500	7500	150	150
4	0	1	1	7500	8400	150	150
5	0	1	1	8400	9300	150	200
6	0	1	1	9300	10200	200	200
0	1	1	1	5900	6900	150	150
0	2	1	1	7700	8600	150	150
0	3	1	1	—	10300	—	200
0	3	2	1	10600	12400	200	250
0	4	1	1	—	11800	—	250
0	4	2	1	12000	13900	250	300
0	4	3	1	13300	16000	250	300

Number of				Initial Fee		Minimum Monthly Fee	
140 Single Heads (2 Pedestal)	Triple Heads	Pump Units	Power Supplies	Non-Cond. Paint	Cond. Paint	Non-Cond. Paint	Cond. Paint
1	0	1	1	4900	5900	150	150
2	0	1	1	6000	6900	150	150
3	0	1	1	6900	7800	150	150
4	0	1	1	7900	8900	150	200
5	0	1	1	8900	9800	200	200
6	0	1	1	9900	10800	200	200
4	0	2	1	9100	10900	200	200
5	0	2	1	10100	11900	200	250
6	0	2	1	11100	12900	200	250

Pricing Schedule

Integral Motor Discs

Number of		Initial Fee		Minimum Monthly Fee	
Discs	Pump Units	Non-Cond. Paint	Cond. Paint	Non-Cond. Paint	Cond. Paint
1	1	5300	5600	150	150
2	1	6100	6600	150	150
4	1	8100	9200	150	200
4	2	8700	9700	150	200

No. 2 Spray Process.

Initial Fee—Use schedule dated May 6, 1953 (attached)

Monthly Minimum—Use schedule dated May 6, 1953 (attached)

Monthly % of Paint Cost—Determined by home office. To approximate, use attached lists and charts A and B. Make only general conservative statements, as some pertinent factors may not be readily apparent.

Definition of a "Unit."

A unit is comprised of that equipment required to apply (or detear) one coat of paint. This may entail equipment at two effectively adjacent stations so long as both stations apply the same paint (not prime and finish) at a film thickness of not over .00125 inches and without a bake or substantial air dry between stations.

EMR:eh

PLAINTIFF'S EXHIBIT OO.

Ransburg Electro-Coating Corporation.

August 5, 1952

Bulletin to Distributors

Pricing Schedule—No. 2 Process.

Gentlemen:

In order to permit you to have an approximate pricing schedule for our No. 2 Process, we have arranged a table in which various possible combinations of single heads, triple heads, pump units, power supplies, etc., are listed. If you have a reasonable guess as to the number of heads which will be involved on a particular job, then I believe that this pricing schedule will permit you to arrive at a reasonably close approximation of what our initial fee and our minimum monthly fee would be for a particular installation. A copy of this pricing schedule is enclosed for your reference.

So that you will completely understand the various headings the *No. 121 Single Head* is the single head arrangement which is supported on its own pedestal and which is operated from its own integral motor. *The triple head arrangement,* of course, is the standard triple head assembly including drive motor, upright support columns and bases. *The pump unit* is either the standard type pump unit when the coating material is non-conducting or it is the insulated type pump unit when the coating material is conducting. For your information, the standard non-insulated pump unit will accommodate six pumps (two triple heads of six singles), whereas the insulated pump unit will accommodate 12 pumps. *The power supply,* of course, is our standard type voltage supply and control panel. In your considerations, use 4 triple heads or equiv-

alent combinations, as indicated on the pricing schedules, as being a full load for a pack. Also consider that spray stations which are more than 50 feet apart had better have two packs.

Referring to the second page, you will notice there is listed the *No. 140 Single Head.* This is the single head which is supported on a horizontal insulated column similar to the triple head. In this case this single head is supported from two upright columns as is the triple head. We have included this type of single head since in some cases the height of the head above the floor makes the No. 121 Single Head top-heavy and unwieldy. We normally use the No. 140 Single Heads in conjunction with our square patterns where a number of single heads are required above one another to coat a flat extended surface. On page 2 the triple heads, the pump units and the power supplies referred to are identical in all respects to those referred to on page 1.

Also included on page 2 is a tentative pricing schedule for the new disc type atomizer which is driven by its own integral motor.

Shown on this pricing schedule is the initial fee for two types of application, namely non-conducting paint and conducting paint. You will notice the difference in these initial fees and this is primarily due to the fact that the pump unit must be insulated in one case whereas in the other case it can be a conventional type pump. You will also notice that the minimum monthly fee varies depending upon the complexity of the equipment involved.

To aid you in understanding the use of this table, I might cover the following with you. Let us assume that we have an installation which requires 2 triple head units for the coating of both sides of a flat sheet. Let us further assume that each of these triple heads is disposed on opposite sides of the flat sheet and that they are delivering the

identical type of coating material at the same rate. Under these circumstances we would have a set-up which involved two triple heads, one pump unit, one power supply. Referring to line 17, page 1 of the pricing schedule, we see that such a unit would have an initial fee of approximately $7700 if the coating material was non-conducting or $8600 if the coating material was electrically conducting. The minimum monthly fee in both cases would be $150.

Again let us assume that another unit was placed at another position in order to apply prime material on these parts and assume this unit comprised four triple heads, one insulated pump unit, and one power supply. Referring to the table, we see that such a unit has an initial fee of $11,800 and a monthly minimum of $250.

I suggest that you consider the enclosed schedule and see whether or not the various points are clear to you. If they are not, we certainly would appreciate your directing your questions to the attention of the writer and he will try to clarify these various points for you. We plan to send you soon a "Question and Answer Bulletin" covering a lot of details to aid you in fitting this new process to a customer's needs. This should help.

Please notice that the enclosed pricing schedule is only an approximate schedule for your use during initial sales contacts. Final and specific quotations will have to originate from this office and will be calculated more specifically in detail once the exact amount of equipment involved is determined. The variation from the enclosed prices will not, however, be large unless some specific arrangement influences the amount of equipment involved. Please consider this schedule as confidential.

Very truly yours,

Emery P. Miller.

EPM:eh

July 14, 1952

Pricing Schedule—No. 2 Process.

Number of				Initial Fee		Minimum Monthly Fee	
121 Single Heads	Triple Heads	Pump Units	Power Supplies	Non-Cond. Paint	Cond. Paint	Non-Cond. Paint	Cond. Paint
1	0	1	1	4700	5600	150	150
2	0	1	1	5600	6500	150	150
3	0	1	1	6500	7500	150	150
4	0	1	1	7500	8400	150	150
5	0	1	1	8400	9300	150	200
6	0	1	1	9300	10200	200	200
4	0	2	1	8700	10500	150	200
5	0	2	1	9600	11400	200	250
6	0	2	1	10500	12300	200	250
0	1	1	1	5900	6900	150	150
1	1	1	1	7300	8200	150	150
1	1	2	1	8500	10400	150	200
2	1	1	1	8200	9100	150	200
2	1	2	1	9400	11300	200	250
3	1	1	1	9100	10100	200	200
3	1	2	1	10400	12200	200	250
0	2	1	1	7700	8600	150	150
1	2	1	1	—	9900	—	200
1	2	2	1	10200	12000	200	250
2	2	1	1	—	10800	—	200
2	2	2	1	11100	13600	200	250
3	2	1	1	—	11800	—	250
3	2	2	1	12000	13900	250	300
0	3	1	1	—	10300	—	200
0	3	2	1	10800	12400	200	250
1	3	1	1	—	11600	—	250
1	3	2	1	11900	13700	250	250
1	3	3	1	13100	15900	250	300
2	3	1	1	—	12500	—	250
2	3	2	1	12800	14600	250	300
2	3	3	1	14000	16800	300	350
3	3	1	1	—	13400	—	250
3	3	2	1	13700	15600	250	300
3	3	3	1	14900	17700	300	350
0	4	1	1	—	11800	—	250
0	4	2	1	12000	13900	250	300
0	4	3	1	13300	16000	250	300
1	4	2	2	—	17400	—	350
1	4	3	2	16700	19500	350	400
2	4	2	2	—	18300	—	350
2	4	3	2	17700	20400	350	400
2	4	4	2	18900	22600	400	450
3	4	2	2	—	19200	—	400
3	4	3	2	18600	21400	350	450
3	4	4	2	19800	23500	400	450
0	5	2	2	—	18100	—	350
0	5	3	2	17500	20200	350	400
0	6	2	2	—	19600	—	400
0	6	3	2	19000	21700	400	450
0	6	4	2	20200	23900	400	500
0	7	2	2	—	22000	—	450
0	7	3	2	—	24200	—	500
0	7	4	2	22600	26300	450	550
0	8	2	2	—	23500	—	450
0	8	3	2	—	25700	—	500
0	8	4	2	24100	27800	500	550

Number of				Initial Fee		Minimum Monthly Fee	
140 Single Heads	Triple Heads	Pump Units	Power Supplies	Non-Cond. Paint	Cond. Paint	Non-Cond. Paint	Cond. Paint
1	0	1	1	4900	5900	150	150
2	0	1	1	6000	6900	150	150
3	0	1	1	6900	7800	150	150
4	0	1	1	7900	8900	150	200
5	0	1	1	8900	9800	200	200
6	0	1	1	9900	10800	200	200
4	0	2	1	9100	10000	200	200
5	0	2	1	10100	11000	200	250
6	0	2	1	11100	12000	200	250
1	1	1	1	7600	8500	150	150
1	1	2	1	8800	10000	200	200
2	1	1	1	8500	9500	150	200
2	1	2	1	9700	11000	200	250
3	1	1	1	9500	10400	200	200
3	1	2	1	10700	12000	200	250
1	2	1	1	—	10200	—	200
1	2	2	1	10500	12300	200	250
2	2	1	1	—	11100	—	200
2	2	2	1	11400	13300	250	250
3	2	1	1	—	12100	—	250
3	2	2	1	12400	14300	250	300
1	3	1	1	—	11900	—	250
1	3	2	1	12100	14000	250	300
1	3	3	1	13300	16100	250	300
2	3	1	1	—	12800	—	250
2	3	2	1	13100	15000	250	300
2	3	3	1	14300	17100	300	350
3	3	1	1	—	13800	—	300
3	3	2	1	14100	16000	300	300
3	3	3	1	15300	18100	300	350
1	4	2	2	—	17600	—	350
1	4	3	2	17000	19800	350	400
2	4	2	2	—	18600	—	350
2	4	3	2	18000	20700	350	400
2	4	4	2	19200	22900	400	450
3	4	2	2	—	19600	—	400
3	4	3	2	19000	21700	400	450
3	4	4	2	20200	23900	400	500

Pricing Schedule—Integral Motor Discs.

Number of		Initial Fee		Minimum Monthly Fee	
Discs	Pump Units	Non-Cond. Paint	Cond. Paint	Non-Cond. Paint	Cond. Paint
1	1	5300	5600	150	150
2	1	6100	6600	150	150
4	1	8100	9200	150	200
4	2	8700	9700	150	200

Ransburg Electro-Coating Corp.
Indianapolis 7, Indiana

Multiplication Table

Price Work Sheet—No. 2 Process

Quantity

667	1,334	2,001	2,668	3,335	4,002	4,669	5,336	6,003
695	1,390	2,085	2,780	3,475	4,170	4,865	5,560	6,255
960	1,920	2,880	3,840	4,800	5,760	6,720	7,680	8,640
1,220	2,440	3,660	4,880	6,100	7,320	8,540	9,760	10,980
60	120	180	240	300	360	420	480	540
75	150	225	300	375	450	525	600	675
95	190	285	380	475	570	665	760	855
108	216	324	432	540	648	756	864	972
118	236	354	472	590	708	826	944	1,062
13	26	39	52	65	78	91	104	117
38	76	114	152	190	228	266	304	342
164	328	492	656	820	984	1,148	1,312	1,476
195	390	585	780	975	1,170	1,365	1,560	1,755
75	150	225	300	375	450	525	600	675
1,156	2,312	3,468	4,624	5,780	6,936	8,092	9,248	10,404
2,078	4,156	6,234	8,312	10,390	12,468	14,546	16,624	18,702
2,165	4,330	6,495	8,660	10,825	12,990	15,155	17,320	19,485
310	620	930	1,240	1,550	1,860	2,170	2,480	2,790
275	550	825	1,100	1,375	1,650	1,925	2,200	2,475
413	826	1,239	1,652	2,065	2,478	2,891	3,304	3,717
553	1,106	1,659	2,212	2,765	3,318	3,871	4,424	4,977
50	100	150	200	250	300	350	400	450

Multiplication Table for Use with Form No. 12. 7/10/52.

PLAINTIFF'S EXHIBIT SS.

Assignment.

In Consideration of the sum of Five Thousand Dollars ($5000.00); receipt of which is hereby acknowledged, the undersigned Western Electric Company, Incorporated, a New York corporation, hereinafter called Assignor, does hereby sell, assign and transfer to Harper J. Ransburg, H. Gregg Ransburg, Harold P. Ransburg and Edwin M. Ransburg, a co-partnership doing business under the firm name and style of Harper J Ransburg Company, having an office at 1234 Barth Avenue, Indianapolis, Indiana (hereinafter called Assignee), the entire right, title and interest in and to the invention covered by Letters Patent of the United States No. 1,855,869 issued April 26, 1932 to Emerson Pugh for Method of and Apparatus for Coating Articles, together with all the rights and privileges granted and secured thereby and also all claims, demands and rights of action which said Assignor may have against others on account of any past infringement of said patent, with the right to Assignee to sue for and recover in its own name and for its own use and benefit all profits and damages which have accrued or arisen to said Assignor or to which it may be entitled by reason of any such past infringement. This assignment does not convey to Assignee, directly, indirectly or by implication, any interest, license or right of any kind or character under or relating to any invention or patent other than the invention and patent identified above or any claims, demands and rights of action with respect to past infringements, other than those above specified.

The foregoing assignment is subject to:

(a) a non-exclusive non-transferable license which said Assignor hereby reserves for itself, for Companies

of the Bell System, and for its and their successors, to make, use and sell equipment and to use methods and processes, covered by said Letters Patent and reissues and extensions thereof, said license being for the entire term of said patent or patents; and

(b) any and all licenses under said patent or patents which Assignor may have heretofore granted or agreed to grant.

For the purposes of this Assignment:

"Companies of the Bell System" comprise American Telephone and Telegraph Company, Licensee companies of the American Telephone and Telegraph Company, Western Electric Company, Incorporated and the several subsidiaries of each of the foregoing companies.

"Licensee companies" means companies which operate under patent license and service contracts with American Telephone and Telegraph Company to furnish wire telephone communication facilities as a public service in the United States or between the United States and other countries.

"Subsidiaries" are companies the majority of whose stock entitled to vote for the election of directors is controlled by the parent company either directly by legal or equitable ownership thereof, or indirectly through one or more other companies by means of such stock ownership, or partly by such direct control and partly by such indirect control.

The Assignor hereby covenants with Assignee that it will at all times upon request execute and deliver any and all further assignments, documents and papers which may be necessary to perfect the title of Assignee to said Letters Patent subject to the licenses as aforesaid and that if said

Assignee shall at any time desire to secure a reissue of said patent, the Assignor will, so far as it is able so to do, see that all rightful oaths are made and all lawful acts performed which may be necessary for the procuring of such reissue without charge to Assignee, except for reasonable compensation for time and necessary expense.

Signed at New York, New York, this 7th day of April, 1943.

Western Electric Company,
Incorporated,
By W. F. Hosford,
Vice President.

(Seal)

Attest:
(Illegible),
Secretary.

State of New York, }
County of New York. } ss.

On the 14th day of May, nineteen hundred and forty three, before me came W. F. Hosford, to me known, who, being by me duly sworn, did depose and say that he resides at 21 Sagamore Road, Maplewood, New Jersey, that he is vice president of Western Electric Company, Incorporated, the corporation described in, and which executed the foregoing instrument; that he knows the seal of said corporation; that the seal affixed to said instrument is such corporate seal; that it was so affixed by authority of the Board of Directors of said corporation, and that he signed his name thereto by like authority.

Marguerite M. Wholey,
Notary Public.

(Seal)

PLAINTIFF'S EXHIBIT TT.

Agreement.

This Agreement entered into as of the 3rd day of May, 1943, by and between Harper J. Ransburg Company, a co-partnership consisting of Harper J. Ransburg, H. Gregg Ransburg, Harold P. Ransburg and Edwin M. Ransburg, said co-partners having their principal place of business at Indianapolis, Indiana, hereinafter referred to as "Ransburg," and The Brush Development Company, a corporation of the State of Ohio, having its principal place of business at Cleveland, Ohio, hereinafter referred to as "Brush,"

Witnesseth That:

Whereas, said Ransburg is the owner of a certain application for United States letters patent identified as the application of Harold P. Ransburg, Serial No. 366,529, filed November 22, 1940, entitled "Process for Coating Articles" and the said Brush is the owner of a certain application for United States letters patent identified as the application of Charles K. Gravley, Serial No. 318,914, filed January 15, 1940, entitled "Electrostatic Method and Apparatus"; and

Whereas, said applications for letters patent have been found to interfere and an interference in the United States Patent Office was declared on August 13, 1942, as No. 80,369; and

Whereas the parties did enter into a Memorandum Agreement in respect to said applications and interference proceedings under date of September 17, 1942, and a Supplemental Agreement thereto under date of December 27, 1942; and

Whereas, Ransburg is desirous of acquiring certain

rights in and to the application for letters patent of the said Gravley as hereinafter more specifically set forth and described, and upon the following terms and conditions.

Now, therefore, in consideration of One Dollar ($1.00) and other valuable considerations passing between the parties and the mutual covenants and agreements as hereinafter set forth, said parties do hereby agree as follows:

1. Said above-mentioned Memorandum Agreement and Supplemental Agreement thereto are hereby cancelled and terminated by reason of this Agreement and the provisions and terms hereof.

2. In consideration of the payment by the party Ransburg to the party Brush of Seven Thousand Five Hundred Dollars ($7,500.00), receipt whereof is hereby acknowledged, the said Brush does hereby sell, assign and set over to the party Ransburg, by separate assignments, as evidenced by the instruments executed herewith, the entire right, title and interest in and to said application of Charles K. Gravley for letters patent, Serial No. 313,914, filed January 15, 1940, entitled "Electrostatic Method and Apparatus," and letters patent of the Dominion of Canada to Gravley, No. 408,800, granted November 24, 1942, for "Electrostatic Method and Apparatus."

3. In further consideration, the party Ransburg hereby agrees to pay to the party Brush, One Percent (1%) of the total monies received by Ransburg resulting or emanating from any sale or contract made after five (5) years from the date hereof for the manufacture, installation, lease or license of the apparatus or method, as set forth and covered by either of said first-mentioned applications for letters patent of Harold P. Ransburg or Charles K. Gravley, or any letters patent granted thereon, and in respect to which Ransburg shall keep proper books of account and records which shall be open to inspection by Brush at any time during business hours, and make a

written report to Brush accompanied by the payment herein referred to on or before February first covering the said monies received during the preceding calendar year, or fraction thereof.

4. The party Ransburg does hereby grant to the party Brush, royalty free, a non-transferable but exclusive license to manufacture, use or sell apparatus, or practice the methods of the inventions coming within the scope of said applications for letters patent of the said Harold P. Ransburg above identified and the said Charles K. Gravley above identified, or any letters patent, division or reissue granted thereon, and including said Canadian letters patent, limited to the painting, coating, processing and/or sale of piezo-electric crystals and crystal devices, magnetic recording and/or reproducing apparatus employing a magnetic material as a recording medium and parts thereof, without the right to grant sub-licenses, except that (a) Brush shall have the right to grant sub-licenses to its present and future licensees to embody in piezo-electric devices manufactured by such licensees, piezo-electric units purchased as such by such licensees from Brush and coming within the scope of said applications and to use and sell such piezo-electric devices and to sell or otherwise dispose of such piezo-electric units purchased from Brush as repair or replacement parts for piezo-electric devices of licensees' manufacture, and (b) Brush shall have the right to grant to the American Telephone and Telegraph Company its associated operating telephone companies in the United States, Bell Telephone Laboratories, Incorporated, Western Electric Company, Incorporated, and subsidiaries of the foregoing companies, sub-licenses under any patents and reissues thereof that may be granted on the application of Charles K. Gravley above identified or any divisions thereof within the provisions of any licenses granted or

agreed to be granted to said companies by the party Brush.

5. The party Ransburg hereby grants to the party Brush a non-exclusive and non-transferable license, royalty free, to manufacture and use apparatus or methods coming within the scope of the following letters patent and applications for letters patent, or any letters patent, division or reissue thereof which may be granted on said applications, and for the full term thereof, and to include any letters patent related thereto on covering improvements thereon which may be hereafter acquired by Ransburg during the life of this agreement:

U. S. Letters Patent No. 2,247,963, granted July 1, 1941, for "Apparatus for Spray Coating Articles"; filed by Harold P. Ransburg and Harry J. Green;

Canadian Letters Patent No. 408,800, granted November 24, 1942, for "Electrostatic Method and Apparatus"; filed by Charles K. Gravley;

Application for U. S. Letters Patent Serial No. 308,024, filed December 7, 1939, by Harold P. Ransburg and Harry J. Green, for "Method of Spray Coating Articles";

Application for U. S. Letters Patent Serial No. 313,914, filed January 15, 1940, by Charles K. Gravley, for "Electrostatic Method and Apparatus"; and

Application for U. S. Letters Patent Serial No. 366,529, filed November 12, 1940, by Harold P. Ransburg, for "Process for Coating Articles".

6. This agreement shall remain in force and effect during the life of any letters patent, division or reissue resulting from either of said first-mentioned applications for letters patent of the said Harold P. Ransburg or Charles K. Gravley, terminating upon the expiration thereof, other than as provided in Paragraph (5) and shall extend to and be inclusive of the United States, its ter-

ritories, and the Dominion of Canada, and other foreign countries in which letters patent corresponding to the said Gravley application may be acquired, with exception of the United Kingdom of Great Britain and Northern Ireland, the Irish Free State, Australia, New Zealand, British India, Burma, and Aden, and to that end Brush will cooperate in Ransburg's acquiring such foreign letters patent at Ransburg's request and expense. In the event that no letters patent shall be granted on either of the above identified applications, then this agreement shall remain in force for a period of seventeen (17) years from the date of the agreement.

7. This agreement shall extend to and be binding upon the successors in business, heirs or assigns of either party hereto.

In Witness Whereof said parties have set their hands and seals at Indianapolis, Indiana, and Cleveland, Ohio, respectively, as of the date first above set forth.

Harper J. Ransburg Company
By Harper J. Ransburg (LS)
Copartner

The Brush Development Company
By W. R. Burwell
(Corporate Seal) *Chairman of the Board.*

State of Indiana, }
County of Marion. } ss.

On the 25th day of May, 1943, before me personally appeared Harper J. Ransburg, to me known, who acknowledged that he is one of the copartners of the copartnership, Harper J. Ransburg Company above recited, that he executed the foregoing instrument on behalf of said copartnership, and that the same is his free act and deed, individually and as such copartner.

Julia H. Wells,
Notary Public

(Seal)

Commission expires June 20, 1944.

State of Ohio, }
County of Cuyahoga. } ss.

On the 15th day of May, 1943, before me personally appeared W. R. Burwell, to me known, who acknowledged that he is Chairman of the Board of Directors of The Brush Development Company, that he executed the foregoing instrument on behalf of said company, and that the same is his free act and deed, individually and as Chairman of the Board of Directors.

Dorothy Dille,
Notary Public

(Seal)

My Commission Expires Mar. 12, 1944.

PLAINTIFF'S EXHIBIT UU.

This Agreement, made and entered into as of the 26th day of September, 1944, between Harper J. Ransburg Company, a co-partnership, consisting of the following partners: Harper J. Ransburg, H. Gregg Ransburg, Harold P. Ransburg, and Edwin M. Ransburg, having its principal place of business at Indianapolis, Indiana, hereinafter sometimes designated as "Ransburg" and the Behr-Manning Corporation, a corporation duly organized pursuant to the laws of the State of Massachusetts, and having its principal place of business at Watervliet, New York, hereinafter sometimes designated as "B-M".

Witnesseth That:

Whereas, Ransburg is the owner of certain patents and patent applications having to do mostly with the electrostatic propulsion and deposition of liquid particles or particles suspended in liquid, particularly in relation to the painting art, all more particularly set forth in Exhibit A hereto annexed and sometimes mentioned as Ransburg Patents: and

Whereas, B-M is the owner of certain patents and patent applications relating to the art of electrostatic deposition of particles or materials, all more particularly set forth in Exhibit B annexed hereto and sometimes mentioned as B-M Patents; and

Whereas, Ransburg is operating in the field which is broadly defined as the application of liquid coatings; and

Whereas, B-M is operating in the field broadly defined as manufacturing and selling coated abrasives and abrasives and flock coated articles; and

Whereas, it is the desire of Ransburg to grant to B-M an exclusive license under the patents set forth in Ex-

ıibit A in the abrasive and coated abrasive fields and in the field wherein articles are coated with fiber-shaped particles for the life of such patents and the life of any patents that may be issued upon the applications set forth in Exhibit A and for the life of any patents that may issue from re-issues or subdivisions of any such patents or patent applications, and

Whereas, it is the desire of B-M to grant to Ransburg an exclusive license under the patents set forth in Exhibit B in the field of the application of paints or liquid coatings for the life of such patents and the life of any patents that may be issued upon the applications set forth in Exhibit B and for the life of any patents that may issue from re-issues or subdivisions of any such patents or patent applications.

Now, Therefore, in consideration of the premises and of the mutual and reciprocal covenants and agreements hereinafter contained, Ransburg and B-M each for themselves, their successors and assigns, have agreed and do hereby agree as follows:

1. Ransburg hereby grants to B-M an exclusive royalty-free right and license with the right to grant sublicenses under each and every of Ransburg's patents set forth in Exhibit A and any patents issuing from applications set forth in Exhibit A and from re-issues and subdivisions of any such patents or applications, for the life of such patents. Such exclusive license shall apply and be limited to:

(a) Abrasive articles of every kind involving the electrostatic propulsion, dispersion, orientation, deposition, or classification of solid and/or liquid particles;

(b) Flock coated articles or articles coated with fiber-shaped particles of material of every kind in-

volving the electrostatic propulsion, dispersion, orientation, deposition, or classification of liquid particles and/or solid fiber-shaped particles and/or comminuted fiber-shaped particles; and

(c) For the separation, grading, or classification of abrasive or fiber-shaped particles of material used in connection with the fields described in (a) and (b) above, according to kind, size, and/or weight.

2. B-M hereby grants to Ransburg, an exclusive royalty-free right and license with the right to grant sub-licenses under each and every of B-M's patents set forth in Exhibit B and any patents issuing from applications set forth in Exhibit B and from re-issues and subdivisions of any such patents or applications, for the life of such patents, for use in the electrostatic propulsion, dispersion, orientation, deposition, separation, grading, or classification of liquid particles or particles suspended in a liquid except:

(a) Abrasive articles of every kind involving the electrostatic propulsion, dispersion, orientation, deposition, or classification of solid and/or liquid particles;

(b) Flock coated articles or articles coated with fiber-shaped particles of material of every kind involving the electrostatic propulsion, dispersion, orientation, deposition, or classification of liquid particles and/or solid fiber-shaped particles and/or comminuted fiber-shaped particles; and

(c) For the separation, grading, or classification of abrasive or fiber-shaped particles of material used in connection with the fields described in (a) and (b) above, according to kind, size, and/or weight.

3. In event of infringement by others of any letters patent covered by and included in this agreement, the party hereto owning said letters patent shall first have the right to bring suit for infringement and join the other party as co-plaintiff or effect settlement thereof for past infringement at its expense retaining any and all recovery from such suit or settlement, the other party cooperating therein and having the right to be represented by counsel at its expense; provided however that said other party as exclusive licensee under such infringed patent, but only if the infringement extends to and invades its exclusive rights hereunder, shall have the right to bring suit for infringement of said patent and join the owner of the patent as co-plaintiff or effect settlement thereof at its expense, retaining any and all recovery from such suit or settlement, if after six months written notice the owner of the patent fails to proceed with such suit or settlement and wherein the owner of the patent shall have the right to be represented by counsel at its expense, and shall cooperate in such suit or settlement; and provided further that in the event said parties may proceed jointly with the filing of such suit or settlement and share equally in the expense thereof, then said parties shall divide equally between them any recovery therefrom.

4. In event of any question or dispute arising hereunder with respect to the extent or limitations of the respective exclusive fields, as defined in paragraphs 1 and 2, or any interpretation thereof the parties agree that they will use every effort to amicably adjust such question or dispute by conference and agreement between themselves and to endeavor to reach an agreement under such paragraphs, and preferably prior to any commitment thereon. If the parties fail to settle the dispute by conference as stipulated above, such dispute shall be settled by arbitration pursuant to the Arbitration Law of the State

of New York. Either party to such dispute may make a demand for arbitration by notice in writing served upon the other party to the dispute stating the substance of the dispute and the contention of the party making the demand. Within ten (10) days afte rthe service of a demand for arbitration, B-M and Ransburg shall each name an arbitrator and the arbitrators so chosen shall select a third arbitrator. In the event that either B-M or Ransburg fails to comply with the provisions of this paragraph, B-M or Ransburg may make application to the Supreme Court of the State of New York for the enforcement of this paragraph 4. The dispute shall be submitted to the arbitrators in such manner as they shall direct, and the decision of a majority of the arbitrators, rendered in writing, shall be final, conclusive and binding upon B-M and Ransburg. Each party shall pay its own expenses in connection with the arbitration; but the compensation and expenses of the arbitrators shall be borne in such manner as may be specified in their decision in writing.

In Witness Whereof said parties have set their hands and seals at Indianapolis, Indiana, and Troy, New York, respectively, as of the day first above set forth.

Harper J. Ransburg Company
By Harper J. Ransburg
Copartner

Witness
I. Koor

Behr-Manning Corporation
By Elmer C. Schacht
Vice-President

Attest
(Illegible)
Secretary

State of New York,
County of Rensselaer. } ss

On the 24th day of November, 1944, before me personally came Elmer C. Schacht to me known, who being by me duly sworn, did depose and say that he resides in Troy, New York; that he is the Vice President of Behr-Manning Corporation, the corporation described in and which executed the above Instrument; that he knows the seal of said corporation; that the seal affixed to said Instrument is such corporate seal; that it was so affixed by order of the Board of Directors of said corporation, and that he signed his name thereto by like order.

My commission expires March 30, 1945.

L. Paul De Long,
(Seal) *Notary Public*

State of Indiana,
County of Marion. } ss.

On the 13th day of November, 1944, before me personally appeared Harper J. Ransburg, to me well known as one of the copartners of the copartnership, Harper J. Ransburg Company above recited, that he executed the foregoing instrument on behalf of said copartnership, and that the same is his free act and deed, individually and as such copartner.

Nina R. Beauchamp
(Seal) *Notary Public*

My commission expires Mar. 14, 1945.

Exhibit A.

United States Patents:

Pugh 1,855,869
Ransburg 2,247,963
Ransburg 2,334,648
Ransburg 2,270,341
Ransburg 2,335,790

Applications:

Ransburg & Miller—Overspray Recovery for Spray Booth—Ser. No. 516,256—filed Dec. 30, 1943

Ransburg & Helmuth—Method and Apparatus for Coating Articles—Ser. No. 492,204—filed June 25, 1943

Ransburg, Miller & Curtis—Apparatus for Spray Coating Articles—Ser. No. 516,778—filed Jan. 3, 1944

Starkey—Method and Apparatus for Spray Coating Articles—Ser. No. 519,333—filed Jan. 22, 1944

Ransburg—Apparatus and Method for Spray Coating Articles—Ser. No. 519,332—filed Jan. 22, 1944

Ransburg—Electrostatic Coating Method and Apparatus—Ser. No. 540,648—filed June 16, 1944

Miller—Method and Apparatus for Electrostatically Spray Coating Patterns—Ser. No. 540,627—filed June 16, 1944

Ransburg & Curtis—Coating Apparatus—Ser. No. 548,503—filed June 28, 1944

Ransburg & Curtis—Method and Apparatus for Coating Hollow Articles—Ser. No. 542,558—filed June 28, 1944

Exhibit B.

United States Patents:

Re. 20,660
Re. 22,419
1,854,071
2,027,087
2,027,308
2,027,309
2,047,525
2,082,182
2,087,260
2,097,233
2,152,077
2,166,385
2,173,032
2,173,078
2,174,328
2,217,126
2,218,445
2,221,338
2,222,539
2,223,476
2,231,324
2,245,301
2,248,064
2,248,853
2,279,361
2,281,558
2,287,837
2,318,570
2,318,571
2,328,577
2,356,489

Applications

U. S. Appl. Serial No. 391,294
U. S. Appl. Serial No. 396,636
U. S. Appl. Serial No. 541,579 (Division of U. S. Pat. 2,356,489)

The following divisional applications now being prosecuted by the Minnesota Mining & Mfg. Company will not be open for inspection by Ransburg but Ransburg will receive a license under these applications if and when they mature into patents:

U.S. Appl. 200,550 (Division of U.S. Pat. No. 2,248,064)
U.S. Appl. 662,319 (Division of U.S. Pat. No. 2,318,570)
U.S. Appl. 401,484 (Division of U.S. Pat. No. 2,318,570)
U.S. Appl. 452,632 (Division of U.S. Pat. No. 2,318,570)

PLAINTIFF'S EXHIBIT VV.

Agreement made the 7th day of October, 1948, by and between Research Corporation, a corporation organized under the laws of the State of New York and having a principal office at 405 Lexington Avenue, New York 17, New York, (hereinafter called the Licensor), and Ransburg Electro-Coating Corp., a corporation organized under the laws of the State of Indiana, and having a principal office at Indianapolis, Indiana, (hereinafter called the Licensee),

Whereas, the Licensor has the right to grant the within license under the letters patent enumerated in Schedule A hereto attached, hereinafter called the Licensed Patents; and

Whereas, the Licensee owns or controls other letters patent and patent applications pertaining to the electrostatic deposition of coating materials and is engaged in the business of licensing others to practice, and in manufacturing apparatus for practicing, the inventions of such other letters patent and patent applications; and

Whereas, the Licensee is desirous of obtaining a license under the Licensed Patents upon the terms and conditions hereinafter set forth;

Now, Therefore, in consideration of the premises and faithful performance of the covenants herein contained, It Is Distinctly Understood and Agreed:

1. The Licensor hereby grants to the Licensee and the Licensee hereby accepts from the Licensor, upon the terms and conditions hereinafter specified, a license to practice the inventions covered by the Licensed Patents in the country or countries in which the Licensed Patents are effective to the full end of the term or terms for which the Licensed Patents are issued, unless sooner terminated as hereinafter provided.

2. For the rights and privileges granted under the license, the Licensee will pay to the Licensor, in the manner hereinafter provided, to the end of the terms of the Licensed Patents or until this license is surrendered, canceled or terminated as hereinafter provided, earned royalties as follows:

a. Five percent (5%) of the net sales price of apparatus sold by the Licensee and embodying any invention, or adapted and intended for use in practicing any invention, set forth and described in the Licensed Patents, or any of them;

b. Two and one-half percent (2½%) of all sums received by the Licensee as rental for the use of any apparatus embodying any invention set forth and described in any of said Licensed Patents and/or as consideration for the grant of any sub-license under which the sub-licensee practices any invention set forth and described in the Licensed Patents; provided, however, that if any sub sub-licensee operates under sub-license from Licensee a plurality of electrostatic coating units less than all of which embody, or in use

employ, one or more of the inventions set forth and described in the Licensed Patents, Licensee shall not be obligated to pay Licensor any portion of royalties properly allocatable to units which do not embody, and in use do not employ, any invention set forth in the Licensed Patents.

3. The license granted by paragraph 1 above is subject to the following conditions:

a. Notwithstanding anything herein to the contrary, such license is limited to apparatus and methods employing one or more of the inventions of the Licensed Patents in the electrostatic deposition of liquid materials and specifically does not include use of any such invention in connection with flock-deposition, flock-coated material, or in the manufacture of abrasives and coated abrasives.

b. Such license, unless hereinafter modified in accordance with paragraph 7 below, is and shall remain exclusive.

c. Such license, whether or not it remains exclusive, includes the right to manufacture, use, and sell apparatus embodying the inventions of the Licensed Patents and the right to sub-license others both to use the methods set forth and described in the Licensed Patents and to use and sell, but not to manufacture, the apparatus set forth and described in the Licensed Patents, provided, however, that if Licensee grants to any person, firm, or corporation a license effective within the Dominion of Canada Licensee may grant such person, firm, or corporation the right to manufacture, or to have manufactured, in Canada apparatus embodying any invention set forth and described in Licensor's Canadian Letters Patent No. 374,892; provided nevertheless, that such right shall be limited

to apparatus employing one or more of the inventions of the Licensed Patents in the electrostatic deposition of liquid materials and shall specifically preclude any use in connection with flock-deposition, flock-coated material, or the manufacture of abrasives and coated abrasives.

4. Licensee shall keep full, true and accurate books of account containing all particulars which may be necessary for the purpose of showing the amount of royalties payable to the Licensor under paragraph 2 above. Said books of account shall be kept at Licensee's place of business, and said books, at all reasonable times within the period of this license and within one year from any surrender, cancellation or termination of this license, shall be open (insofar, as may be necessary to determine the nature and extent of the Licensee's operations under this license), to the inspection of the Licensor or its duly authorized representatives, who shall be at liberty to make copies of or extracts from said books of accounts.

5. The Licensee within sixty (60) days after the first day of January and July of each year, shall furnish the Licensor a true and accurate semiannual report, giving such particulars of the business conducted by the Licensee during the preceding six (6) months under this license as are pertinent to an accounting under this license. Simultaneously with the making of each such report the Licensee shall pay to the Licensor the royalty shown to be due thereby for the period covered by such report. If the Licensor shall so require such reports shall be made under oath, and shall include any special relevant particulars or technical information which the Licensor may require. The rendering of any report and/or the payment of royalty shown to be due thereby shall not in any event bar, or in any way operate as an estoppel of, the Licensor's rights of examination, inspection and audit, as hereinbefore provided for, nor any

rights or remedies of the Licensor as to any additional royalties which may be found to be due, all of which rights and remedies, it is mutually understood and agreed by the parties hereto, shall survive and shall not be deemed to have been waived by any act or omission on the part of the Licensor.

6. Beginning July 1, 1948, and continuing thereafter so long as the license granted by paragraph 1 above shall endure and remain exclusive, the Licensee shall pay the Licensor minimum royalties at the rate of One Thousand Dollars ($1000.00) per year. To that end, if earned royalties as provided for in paragraph 2 above shall amount to less than One Thousand Dollars ($1000.00) in any twelve-month period terminating with the thirtieth day of June in any year after the year 1948, the Licensee shall accompany the semiannual report next due with payment of such sums as may be necessary to make the royalty payments for such twelve-month period total One Thousand Dollars ($1000.00).

7. At any time after June 30, 1951, either party hereto may convert the license granted in paragraph 1 above from an exclusive to a non-exclusive license by giving the other party six months' written notice of its election to do so; provided, however, that if the Licensor shall elect to convert such license from an exclusive to a non-exclusive license its notice of such election, to be effective, shall be accompanied by payment at the rate of Two Hundred and Fifty Dollars ($250.00) per year for the period beginning with the effective date of conversion of the license and terminating with the expiration of the last-expiring of said Licensed Patents. Conversion from an exclusive to a non-exclusive license at the election of either party shall not relieve the Licensee of its obligation to pay minimum royalties for the period terminating with the effective date of conversion or of its obligation to pay earned royalties thereafter; but such conversion shall relieve the Licensee of its

obligation to pay minimum royalties for the remaining life of the license following the conversion.

8. It is understood and agreed that should the license granted by paragraph 1 above cease to be exclusive and should the Licensor thereafter establish any more favorable rate of royalty under conditions substantially identical with those of Licensee under the Licensed Patents than that charged herein, the Licensor will give the Licensee the benefit of such more favorable rate from and after the date it is established.

9. The Licensee will properly affix to its products produced under this license which are covered by one or more apparatus claims of the Licensed Patents proper statutory patent notices.

10. The Licensor agrees to protect its patents from infringement and prosecute infringers when in its judgment such action may be reasonably necessary, proper, and justified. The Licensee shall have the right, upon written request, to submit questions of infringement to arbitrators to determine whether the Licensee may be irreparably damaged or its interests jeopardized in a substantial manner through failure of the Licensor to sue any party or parties claimed by the Licensee to be an infringer or infringers. If said arbitrators determine that the Licensee may be irreparably damaged or its interests jeopardized in a substantial manner by failure to sue such party or parties, the Licensor will file and prosecute suit against the said party or parties on written agreement of the Licensee to pay the cost of such litigation (including legal fees and other disbursements). The Licensee shall be entitled to any recoveries awarded by way of judgment or costs as a result of such proceedings, provided, however, that if any other licensees under the patents alleged to be infringed shall, prior to the institution of such litigation, agree to share in the costs of the litigation equally or in such other

proportion as the licensees may agree upon, such licensees shall share in the same proportion in the proceeds of the litigation.

11. *a.* If the Licensee shall become bankrupt or insolvent and/or if the business of the Licensee shall be placed in the hands of a Receiver, Assignee, or Trustee, whether by the voluntary act of the Licensee or otherwise, this license shall immediately terminate.

b. Upon any breach of or default under this license by Licensee, the Licensor may cancel this license by thirty (30) days' written notice, specifying the breach or default complained of, by registered mail to the Licensee. Said notice shall become effective at the end of said period, unless during said period Licensee shall cure such breach or default.

12. The Licensee may surrender or terminate this license at any time on three months' notice to the Licensor by completing and executing in detail the statement and affidavit annexed hereto, and returning the same with this license by registered mail to the Licensor.

13. Upon any surrender, cancellation or termination of this license, all unpaid royalties on operations under this license shall accrue and become immediately due and payable and royalties at the rate last paid or payable by the Licensee shall accrue and become immediately due and payable for all operations to such date.

14. The surrender, cancellation or termination of this license shall in no way affect the liability of the Licensee for any sums of money accruing or becoming due or payable prior to the date such surrender, cancellation or termination becomes effective and shall be without prejudice to any rights of the Licensor as respects anything which may occur during the period that this license is in

force or to any right of action or remedy of the Licensor for the recovery of any moneys then due hereunder.

15. Any sub-license granted by the Licensee under this agreement shall survive the surrender, cancellation or termination of this agreement and upon such surrender, cancellation or termination the Licensee shall assign all its right, title and interest therein from and after such surrender, cancellation or termination to the Licensor.

16. This agreement shall inure to the benefit of and be binding upon the successors and assigns of each party hereto; provided, however, that without the consent of the Licensor the license granted by the Licensor herein shall not be assignable by the Licensee apart from its entire business.

17. Any controversy or claim arising out of or relating to this license or breach thereof, shall be settled by arbitration, in accordance with the Rules, then obtaining, of the American Arbitration Association, and judgment upon the award rendered may be entered in the highest court of the forum, state or federal, having jurisdiction.

18. All written notices referred to herein shall be given by registered mail addressed to the last known address of the respective parties.

19. This agreement shall be interpreted in accordance with the laws of the State of New York.

20. If, in any proceeding in which the validity, infringement, or priority of invention of any claim of the Licensed Patent is in issue, a judgment is entered which becomes irrevocable by reason of failure or inability to appeal or obtain further review thereof, the construction placed upon any such claim by such irrevocable judgment shall be thereafter followed not only with respect to such claim but to all claims to which such construction applies, with respect to acts occurring thereafter; and if such irrevocable judgment holds any claim invalid or is adverse to the

patent as to inventorship, the Licensee shall be relieved thereafter of paying royalties with respect to any practice of the invention of the Licensed Patents covered only by such claim or by any other claim of equivalent or broader scope to which such irrevocable judgment is applicable, and of the performance of those other acts which may be required by this agreement only because of such claims; provided, however, that if there are two or more conflicting irrevocable judgments with respect to the same claim, the decision of the higher tribunal shall be followed thereafter, but if the tribunals be of equal dignity, then the decision less favorable to the claim shall be followed in respect to all uses within the territorial jurisdiction of the tribunal rendering such less favorable decision and elsewhere the decisions more favorable to the claim shall be followed until the less favorable decision has been followed by the irrevocable judgment of another tribunal of at least equal dignity. In the event of conflicting irrevocable judgments of the Supreme Court of the United States, the lastest shall control.

In Witness Whereof, the parties hereto have hereunto set their hands and seals and duly executed this license agreement the day and year first above written.

Research Corporation,
J. W. Barker,
President.

Attest:

J. W. Hinkley,
Secretary.

Ransburg-Electro-Coating Corp.,
By. E. M. Ransburg,
Vice President.

Attest:

Gregg Ransburg,
Secretary.

(Seal)

State of New York,
County of New York. } ss:

On the 7th day of October, in the year 1948, before me personally appeared Joseph W. Barker to me known, who, being by me duly sworn, did depose and say that he resides in New Rochelle, N. Y. that he is the President of Research Corporation, the corporation described in and which executed the foregoing instrument; that he knows the seal of said corporation; that the seal affixed to said instrument is such corporate seal; that it was so affixed by order of the Board of Directors of said corporation, and that he signed his name thereto by like order.

Adelaide J. McCormack,
Notary Public, State of N. Y. Reg. No. 386.

My commission expires March 30, 1950.

State of Indiana,
County of Marian. } ss:

On this 5th day of October, in the year 1948, before me personally appeared, E. M. Ransburg to me known, who, being by me duly sworn, did depose and say that he resides in Indianapolis, Indiana, that he is the Vice President of Ransburg Electro-Coating Corporation, the corporation described in and which executed the foregoing instrument; that he knows the seal of said corporation; that the seal affixed to said instrument is such corporate seal; that it was so affixed by order of the Board of Directors of said corporation, and that he signed his name thereto by like order.

Calvin Westerhaus,
(Seal) *Notary Public.*

My commission expires March (illegible).

Schedule "A."

U. S. Patents, Date of Issue and Subject:

No. 2,097,233, October 26, 1937, Electrical Deposition in Pattern Form.

No. 2,221,338, November 12, 1940, Deposition of Material.

Canadian Patent:

No. 374,892, July 5, 1938, Improvements in Electrical Deposition in Pattern Form.

Statement and Affidavit for Surrender or Termination of License by Licensee.

(Under paragraph 12 of annexed license.)

Know All Men By These Presents, that Ransburg Electro-Coating Corp. described in the annexed license and hereinafter known as the Licensee, does hereby surrender and terminate to the annexed license in accordance with the terms thereof, and said Licensee represents, declares and covenants, as follows:

1. That said Licensee has not, under past or present business operations, made use or availed itself of any privilege or license under or because of the annexed license except as follows:

2. That said Licensee has heretofore paid to Research Corporation all royalties due according to the provisions of the annexed license on all operations heretofore or at present being conducted by the Licensee under the annexed license, except the sum of ....., check for which is tendered herewith.

In Witness Whereof, the Licensee has hereunto set hand and seal this ..... day of ..... 19....

Attest:

By .....

President,

.....

Secretary.

State of .....
County of ..... } ss:

On this ..... day of ....., in the year 19 ., before me personally appeared, ...
to me known, who being by me duly sworn did depose and say that he resides in ..... ; that he is the ..... of ..... the corporation described in and which executed the foregoing instrument; that he knows the seal of said corporation, that the seal affixed to said instrument is such corporate seal; that it was so affixed by order of the Board of Directors of said corporation, and that he signed his name thereto by like order.

.....
Notary Public.

PLAINTIFF'S EXHIBIT NO. XX.

Subject: Electrostatic Atomization.

Inventor: W. A. Starkey and E. M. Ransburg.

Discussion:

The usual air operated, air atomizing spray gun has many disadvantages when used as the spray source in conjunction with electrostatic precipitation methods. Such guns supply an atomized spray which is limited in extent, not composed of uniform sized particles, and variable in pattern. All of these features have definite disadvantages in this application. It is the purpose of this invention to describe a new method of atomization for use with electrostatic spraying which does not have these limitations.

Several methods of producing this result are described

herein as possible modfiication of the general principle involved.

In drawing #4307 one modification of the electrostatic atomizer is revealed. Fig. 1 shows a cross section view of the arrangement. A supply trough (2) carrying the paint supply has an elongated funnel shaped as indicated. At the mouth (3) of this funnel there is rigidly fastened a member (1) composed of fine wires wound about a fixed shaped mandrel. The sides of the funnel are the only points in contact with the five wires so that when viewed from below, this arrangement presents the appearance of section A-A. The series of openings thus formed between the wires offer a group of passages through which the coating material can flow down to the lower edge. In this manner one has a uniformly distributed source of material.

This arrangement when held above a charged plate or item will upon application of the field present a source from which the paint can be continuously "deteared." The same action will take place if the article or plate is grounded and the arrangement (1) is charged to a highpotential. The method of charging such an arrangement and the theory of operation is discussed elsewhere in letter patents No. ..... The result of such "detearing" action is that the paint leaves the atomization agent (1) in a fine uniform spray and precipitates on the item under the action of the electrical force. As additional material flows down under the action of gravity it likewise will be electrostatically atomized and applied to the piece to be coated. If the coating material is viscous the supply funnel can be closed and controlled air pressure applied to aid flow down to the "detearing" edge.

Another modification of this same principle is covered in drawing #4309. Herein the material to be sprayed enters the electrostatic atomizer through pipe (1) and its flow into the pipe (3) is controlled by valve (2). Pipe (3),

held horizontally under normal operation, has a series of small circular openings along its length at the bottom side. Attached to pipe (3) and shaped as shown in the drawing is a baffle plate (4). About this assembly and along its entire length is wound a fine wire so spaced that small uniform openings exist between each adjacent turn. Material flowing from the openings in pipe (3) flows by way of baffle plate (4) to and through these openings to lower edge of atomizer and is "deteared" from there continuously onto the item, thus supplying the desired coating.

Another modification of this same principle is shown in drawing #4319. In this modification paint from source is supplied through hose (1) and controlled by hand valve (2) so that it flows into head of atomizer (3) under any desired pressure. This head has a cross-sectional V shape as shown and has a series of fine openings (4) along its lower sharp edge. Paint will issue from these openings to be "deteared" and atomized in the manner described above onto the work as indicated. This simple application can be modified by having small projecting wires or cones (5) and (6) extending in a controlled manner from each opening so that extension or retraction of these members in and out of the hole will permit the amount of material issuing from these holes to be controlled.

Drawing #4320 shows the same principles applied to a vertical hand spray application. The atomizer in this case is broken up into sections so that variations in flow caused by pressure differences due to elevation of these various parts can be regulated. Any of the modifications disclosed in drawing #4319 can be applied in this arrangement.

PLAINTIFF'S EXHIBIT ZZ-7.

Agreement Copy No. 1.

Serial No. 3530.

Ransburg Electro-Spray Agreement.

"This Agreement, entered into this 14th day of June, 1949, by and between Ransburg Electro-Coating Corp., an Indiana corporation, having its principal place of business at Indianapolis, Indiana, hereinafter called "Ransburg", and Eastern Venetian Blind Company, Baltimore, Maryland, hereinafter called "User", Witnesseth That:

Whereas, Ransburg is the owner of, or otherwise has the right to grant licenses under, certain inventions, letters patent of the United States or patent applications pertaining to and covering methods and apparatus used in coating articles with electrostatically atomized and electrostatically deposited coating material, the process so used being hereinafter referred to as "said Process", has acquired much engineering data and experience pertaining to said Process, has designed special equipment therefor and is conducting research in that field; and

Whereas, User desires to use said Process and in so doing to avail itself of the experience gained by Ransburg in this field.

Now, therefore, it is mutually agreed as follows:

1. License: In consideration of the payment by User of the fees herein provided, Ransburg hereby grants to User, subject to and in accordance with all of the terms and conditions of this Agreement and while the same is in effect, the right to use said Process in the coating of venetian blinds and parts therefor with the Equipment furnished by Ransburg herein below described, with one Unit,

as shown in Ransburg's Drawing No. 132203 subject to such changes therein and such further specifications as Ransburg may prescribe, but said right shall not include the use of said Process in the manufacture of abrasive articles, flock-coated articles or articles coated with fiber-shaped particles.

2. Equipment: Ransburg will furnish User two voltage packs and electrical controls, an electrostatic atomizer and insulating support therefor, high voltage lead-in means and such other equipment as Ransburg deems desirable, which will be shipped prepaid to User's plant at Baltimore, Maryland upon request of User. Ransburg will supply replacements, without charge, of any defective parts of said two voltage packs, electrical controls and high voltage lead-in means, except where the defect results from improper use or operation, or negligence of User, and provided User returns such defective parts to Ransburg within thirty days after they become defective. User shall furnish all labor, materials and equipment necessary for the use of said Process except the Equipment to be furnished by Ransburg in accordance with this paragraph.

3. Supervision: Ransburg will furnish supervision necessary to placing said Equipment in readiness for operation. Should Ransburg's supervisor make more than one trip to the plant of User or be delayed there for any cause not chargeable to Ransburg, then for each day of such trip or trips or such delay, User shall pay Ransburg Seventy-Five Dollars and any necessary transportation expenses incurred thereby.

4. Conversion: Ransburg will grant, upon written request by User, the right to use said Process other than as described in Paragraph 1 unless the requested use involves unsafe practices or impractical conditions in Ransburg's opinion or is in conflict with the policies or com-

mitments of Ransburg. Such grant will be valid only when written and signed by Ransburg.

5. Liability: User agrees that Ransburg shall not be liable to User for any claim resulting from the use, operation or condition of the Equipment furnished by Ransburg. User further agrees to reimburse Ransburg for any loss which may be sustained as a result of any liability to third parties for any claim resulting from the use, operation or condition of the Equipment furnished by Ransburg, while said Equipment is in the possession or custody of User.

6. Use of Equipment: User agrees to follow Ransburg's safety recommendations, and to maintain said Equipment in as good repair as when installed, ordinary wear and tear from proper use and operation alone excepted. User agrees that it shall not use or operate said Equipment with any of the parts or safety devices removed, and to reimburse Ransburg for loss of or damage to said Equipment while in User's possession or custody.

7. Title: Title to said Equipment shall at all times remain in Ransburg and said Equipment shall remain personal property regardless of how it is affixed to the realty. Ransburg shall have at all times, during business hours, the right to enter User's premises for the purpose of determining whether said Equipment and said Process are being used as herein provided. User shall not have the right to (1) lease or grant the right to use said Equipment to any person, firm or corporation, (2) remove it from the plant to which it is delivered for installation or (3) use it for any purpose or in any manner other than as herein provided. Upon termination of this Agreement, User agrees to deliver said Equipment, freight prepaid to Indianapolis, Indiana, to Ransburg in as good condition as when installed, ordinary wear and tear incident to its proper use and operation alone excepted.

8. Performance: The performance of Ransburg's obligations hereunder is subject to strikes and lockouts, whether in Ransburg's organization or elsewhere, and to accidents, fire, delays in manufacture or transportation, acts of God, embargoes or any Governmental action as well as any causes for postponement or non-performance over which Ransburg has no control. Any of said causes shall absolve Ransburg from all liability to User for delay or non-performance under the terms hereof.

9. Period of Agreement and Termination: Unless terminated as hereinafter provided, this Agreement shall remain in full force and effect for five years from the date thereof and shall automatically renew itself for successive five-year periods upon the same terms and conditions as those set forth herein.

User shall have the right to terminate this Agreement at any time upon thirty days' written notice to Ransburg, provided User has fulfilled its obligations hereunder and returns said Equipment prepaid to Ransburg within thirty days after such notification, in as good condition as when installed, ordinary wear and tear from proper use and operation alone excepted. Ransburg shall have the right to terminate this Agreement at any time after one year from the original date thereof upon six months' written notice to User.

In the event User shall fail to perform any of the conditions or obligations of this Agreement, and such failure shall continue or recur after written notice thereof from Ransburg, Ransburg may (without prejudice to its rights to recover any amounts owing by User as herein provided or any damages for breach of this Agreement) terminate this Agreement and take possession of said Equipment, and for that purpose permission is hereby given Ransburg, or any of its agents, to enter any premises wherein said Equipment is located, to discover and take possession of

said Equipment without notice and without being liable to any suit, action, indictment or other proceedings by User or anyone claiming under it. Any delay, concession or indulgence on the part of Ransburg in enforcing any of its rights on any default shall not be deemed a waiver of such rights.

10. Fees: User agrees to pay to Ransburg an initial fee of Thirty-five Hundred Dollars ($3500.00) within sixty days after date of shipment of said Equipment or thirty days after date of installation thereof, whichever occurs earlier. User further agrees to pay Ransburg, on or before the tenth day of each calendar month, during the life of this Agreement, a monthly fee of One Hundred Dollars ($100.00) plus twenty percent (20%) of the cost to User of the coating material (including all its ingredients) used in said Unit during the preceding calendar month.

Monthly fees shall not accrue or be payable under this Agreement until the date User begins using said Process in production or until September 14, 1949, whichever date is earlier. The first and last monthly fees payable under this Agreement shall be prorated according to the portion of the month for which they are payable but only to the extent of the first One Hundred Dollars ($100.00) of these fees.

If within ninety days after the date of this Agreement User terminates this Agreement in accordance with the provisions of Paragraph 9, Ransburg will credit User with the initial fee and any monthly fees that have accrued under this Agreement.

In addition to the above fees, User agrees to pay, or to reimburse Ransburg if it should be obliged to pay, directly or indirectly any taxes, licenses, or fees imposed by the laws of any State, of any political subdivision, or any municipality, or of any other governmental authority by reason of the installation, possession, use or location within

the state of any equipment furnished pursuant to this Agreement. Such sums as may be due under this provision shall be paid separately or added to the invoice for other payments as the law may require or as Ransburg may determine.

Upon request of Ransburg, User shall supply Ransburg with a written report showing the monthly quantity of coating material used in said Unit and the cost to User of said coating material. User agrees to keep permanent books of account from which the correctness of said monthly reports can be verified and agrees that such books of account shall be open to inspection by Ransburg or its duly authorized representatives at any time during User's regular business hours.

11. Technical Information: User hereby agrees to exercise reasonable precaution to treat all information relating to said Process or equipment as secret and confidential.

12. Future Inventions: User Agrees that in the event User acquires any inventions, improvements or letters patent, domestic or foreign, relating to electrostatic coating processes or apparatus, or products made by such processes or apparatus, from any source, Ransburg shall have with respect to the manufacture, use and sale of said inventions, improvements and the subject matter of said letters patent, a royalty-free, assignable license, with right to sub-license, such license to be irrevocable except upon voluntary surrender by Ransburg. Ransburg's rights under this paragraph shall extend to all patents acquired by User during the term of this Agreement or within two years thereafter and to all inventions and improvements, made during the term of this Agreement or within two years thereafter, by User or its employees and covered by any patent or patents subsequently acquired by User.

13. Execution of Agreement: This Agreement sets

forth the entire agreement and understanding between the parties as to the subject matter of this Agreement and no statements, conditions or representations, either oral or written, made by the parties, their employees or agents, including conditions or provisions appearing in any purchase order or other instrument issued by User, shall be valid or binding unless contained in a written instrument signed by both parties.

This Agreement is executed by Ransburg in quadruplicate, subject to execution by User and delivery of two executed copies thereof to Ransburg within thirty days of the date first above written; and if so executed and delivered within that time, it shall be a contract, as of said date, between the parties under the laws of the State of Indiana.

All of the rights and privileges of Ransburg hereunder shall be extended to and inure to the benefit of the successors in business or assigns of Ransburg upon User being given written notice of the assignment of this Agreement to such successors in business or assigns and upon such successors in business or assigns accepting and assuming all obligations of Ransburg hereunder in writing.

In Witness Whereof, the parties have executed this Agreement, acting herein by their respective officers duly authorized therefor.

Ransburg Electro-Coating Corp.

By E. M. Ransburg *V. P.*
Ransburg Title

Attest:
Harry E. Downer

.....

By Harry S. Rosenbaum *Pres.*
User Title

Attest:
Morton M. Robinson

PLAINTIFF'S EXHIBIT ZZ-8.

Ransburg Electro-Spray Agreement Serial No. 6148.

This agreement, entered into by and between Ransburg Electro-Coating Corp., an Indiana corporation, having its principal place of business at Indianapolis, Indiana, hereinafter called "Ransburg," and E. I. du Pont de Nemours and Co., Fabrics and Finishes Department, Toledo, Ohio, hereinafter called "User," Witnesseth:

Whereas, Ransburg is the owner of, or otherwise has the right to grant licenses under, certain United States letters patent and inventions pertaining to and covering methods and apparatus used in electrostatically depositing liquid spray particles, the process so used being hereinafter referred to as "said Process," has acquired much engineering data and experience pertaining to said Process, is conducting research in that field, has performed a substantial amount of engineering in adapting said Process to commercial use, has supplied User with some of the results of said engineering pertinent to User's experimental use and has designed special equipment therefor; and

Whereas, User desires to use said Process and benefit from Ransburg's engineering and requests that Ransburg furnish certain special equipment hereinbelow described;

Now, therefore, it is mutually agreed as follows:

1. License: Ransburg hereby grants to User, subject to and in accordance with all of the terms and conditions of this agreement and while the same is in effect, a non-exclusive, nonassignable license to use said Process at User's plant in Toledo, Ohio, with one unit as shown in Ransburg's Drawing No. 231600, subject to such changes therein and such further specifications as Ransburg may prescribe, for testing and matching liquids. It is specifi-

cally understood that the license under this agreement does not give User the right to use said unit for testing the coating of articles for third parties or demonstrating the coating of articles to third parties without Ransburg's consent in writing.

2. Equipment and Supervision: Ransburg will furnish User, for its use of said Process, high voltage apparatus, triple head and disc atomizing apparatus, liquid supply apparatus for such atomizing apparatus, and electrical controls, and such other equipment as Ransburg deems desirable, which will be shipped prepaid to User's aforesaid plant upon request of User. As parts of Ransburg's equipment become defective, User agrees to return prepaid to Ransburg promptly all such defective parts. Ransburg will furnish User, at Ransburg's prevailing standard charges, replacements of any equipment furnished by Ransburg under this paragraph that becomes defective.

Ransburg will furnish supervision necessary for placing its equipment in readiness for operation. Should Ransburg's supervisor make more than one trip to the plant of User or be delayed there for any cause not chargeable to Ransburg, then for each day of such trip or trips or of such delay, User shall pay Ransburg the sum of Seventy-five Dollars and any necessary transportation expenses incurred thereby.

User shall furnish all labor, materials, and equipment necessary for the Use of said Process except the equipment and supervision to be furnished by Ransburg in accordance with this paragraph.

The furnishing of equipment, replacements, and supervision by Ransburg is subject to the availability to Ransburg of the necessary component parts of the equipment and replacements, to prior shipment commitments of Ransburg or elsewhere, and to accidents, fires, delays in manufacture or transportation, acts of God, court injunctions,

or any governmental action, as well as any causes for postponement or non-performance over which Ransburg has no control; and any failure, due to any of such causes, of Ransburg to perform any of its obligations herein set forth shall not be considered a breach of this agreement.

3. Title and Use of Equipment: Title to all equipment furnished by Ransburg including replacements shall at all times remain in Ransburg, and said equipment shall remain personal property regardless of how it is affixed to the realty. Ransburg shall have at all times, during business hours, the right to enter User's premises for the purpose of determining whether its equipment and said Process are being used as herein provided. User shall not have the right, without the written consent of Ransburg, to (1) lease or grant the right to use the equipment furnished by Ransburg to any person, firm, or corporation, (2) remove it from the plant to which it is delivered for installation, or (3) use it for any purpose or in any manner other than as herein provided.

User agrees that it shall not use or operate Ransburg's equipment with any of the parts or safety devices removed, that it shall follow Ransburg's safety and operating recommendations, and that it shall maintain Ransburg's equipment in as good condition as when installed, ordinary wear and tear from proper use and operation alone excepted.

4. Liability: User agrees that Ransburg shall not be liable to User for any loss, cost, expense, or damage resulting from any failure of said process or equipment to function in any particular manner or to electrostatically coat any particular article or assembly or resulting from the installation, servicing, adjusting, presence, use, operation or condition of Ransburg's equipment. Also, User agrees to indemnify Ransburg for any loss, cost, expense, or damage Ransburg may sustain because of any claims by third parties resulting from the installing, servicing, adjusting, presence, use, operation or condition of Rans-

burg's equipment. User shall be liable to Ransburg for any loss of, or damage to, Ransburg's equipment occurring at any time that such equipment is in the possession of User or any of its agents, ordinary wear and tear from proper use and operation alone excepted.

5. Termination: Either party to this agreement shall have the right to terminate this agreement at any time upon giving the other party thirty days' written notice.

After User returns Ransburg's equipment upon termination of this agreement, Ransburg will refund to User the balance of the initial fee paid by User after deducting the following: (a) any expenses incurred by Ransburg as a result of the return of its equipment, (b) the initial cost of that portion of Ransburg's returned equipment which Ransburg considers obsolete or defective, (c) the cost to Ransburg for initial installation and supervision of User's electrostatic unit under this agreement, and (d) the cost to Ransburg for reconditioning the portion of its returned equipment that is not obsolete.

In the event User shall fail to perform any of the conditions or obligations of this agreement, and such failure shall continue or recur after written notice thereof from Ransburg, Ransburg may (without prejudice to its rights to recover any amounts owing by User as herein provided or any damages for breach of this agreement) terminate this agreement and take possession of its equipment forthwith, and for that purpose permission is hereby given Ransburg or any of its agents to enter any premises wherein its equipment is located to discover and take possession of its equipment without notice and without being liable to any suit, action, indictment, or other proceedings by User or anyone claiming under it. Any delay, concession or indulgence on the part of Ransburg in enforcing any of its rights on any default shall not be deemed a waiver of such rights.

After notice of termination of this agreement, User agrees to deliver the equipment furnished by Ransburg, to Ransburg at Indianapolis, Indiana, freight prepaid, in as good condition as when installed, ordinary wear and tear incident to its proper use and operation alone excepted.

6. Fees: User agrees to pay to Ransburg an initial fee of Four Thousand Dollars ($4,000.00) within sixty days after date of shipment of Ransburg's equipment or thirty days after date of installation thereof, whichever occurs earlier. In the event User has not requested shipment of Ransburg's equipment prior to the termination of this agreement, or within six months of the date of Ransburg's acceptance of this agreement, whichever is earlier, one-half of the initial fee shall become due and payable forthwith, and the balance of it shall be due and payable as provided hereinabove.

In addition to the above fee, User agrees to pay, or to reimburse Ransburg if it should be obliged to pay, directly or indirectly, any taxes, licensed, or fees imposed by the laws of any State, of any political subdivision, of any municipality, or of any other governmental authority by reason of the installation, possession, use, or location of any equipment furnished by Ransburg or by reason of the furnishing of any services by Ransburg pursuant to this agreement. Such sums as may be due under this provision shall be paid separately or added to the invoice for other payments as the law may require or as Ransburg may determine.

If User does not request shipment of Ransburg's equipment prior to the expiration of six months after the date of Ransburg's acceptance of this agreement, Ransburg shall have the right, prior to shipment of its equipment, to change the fees and conditions of this agreement to conform to its policy as of the date of such shipment.

During the term of this agreement, the sum set forth in

Paragraph 2 may from time to time be adjusted commensurately with changes, from the value for November, 1950, in the Consumer Price Index, Large Cities Combined, All Items, as determined by the Bureau of Labor Statistics of the U. S. Department of Labor, on the 1947-49 base, or any successor thereto; provided, however, no such adjustment shall be made unless a change of at least ten percentage points has occurred in said index prior to each such adjustment.

7. Future Inventions: User agrees that in the event User acquires any inventions, improvements, or any rights under any letters patent, domestic of foreign, of any of User's employees at their Toledo, Ohio plant, pertaining to methods and/or apparatus for electrostatically depositing liquid spray particles formed by airless atomization (without the use of compressed air), Ransburg shall have with respect to coating methods and apparatus employing said inventions, improvements, and the subject matter of said letters patent, a royalty-free, non-exclusive, assignable license, with right to sub-license, such license to be irrevocable except upon voluntary surrender by Ransburg. Patents subject to Ransburg's rights under this paragraph shall include only patents under which User has acquired rights during the term of this agreement, patents under which User has acquired rights within two years following termination of this agreement, and patents regardless of when User acquired rights thereunder which cover inventions and improvements made within the term of this agreement or within two years following its termination.

8. Execution of Agreement: This agreement sets forth the entire agreement and understanding between the parties as to the subject matter of this agreement, and no statements, conditions, or representations, either oral or written, made by the parties, their employees, or agents, including conditions or provisions appearing in any purchase order

or other instrument issued by User, shall be valid or binding unless contained in a written instrument signed by both parties. Ransburg makes no warranties of any kind, express or implied, except as set forth in this agreement.

All the rights and privileges of Ransburg hereunder shall be extended to and inure to the benefit of the successors in business or assigns of Ransburg upon User being given written notice of the assignment of this agreement to such successors in business or assigns and upon the written acceptance by such successors in business or assigns of all Ranburg's obligations hereunder.

This agreement consisting of four pages is submitted in quadruplicate for execution by User. It shall become a contract only upon its execution and acceptance by Ransburg's home office in Indianapolis, Indiana, and shall be effective under the laws of the State of Indiana.

In Witness Whereof, the parties have caused this agreement to be executed by an authorized officer or person effective as of the date of acceptance by Ransburg set forth below.

(Seal) Executed and accepted by Ransburg this 26th day of April, 1956.

Ransburg Electro-Coating Corp. (Ransburg)

By Harold Ransburg V.P.

E. I. Du Pont de Nemours and Co. (User)

Fabrics and Finishes Department

By W. F. H. Mattlage, *Ass't. Gen. Mgr.*

(Title)

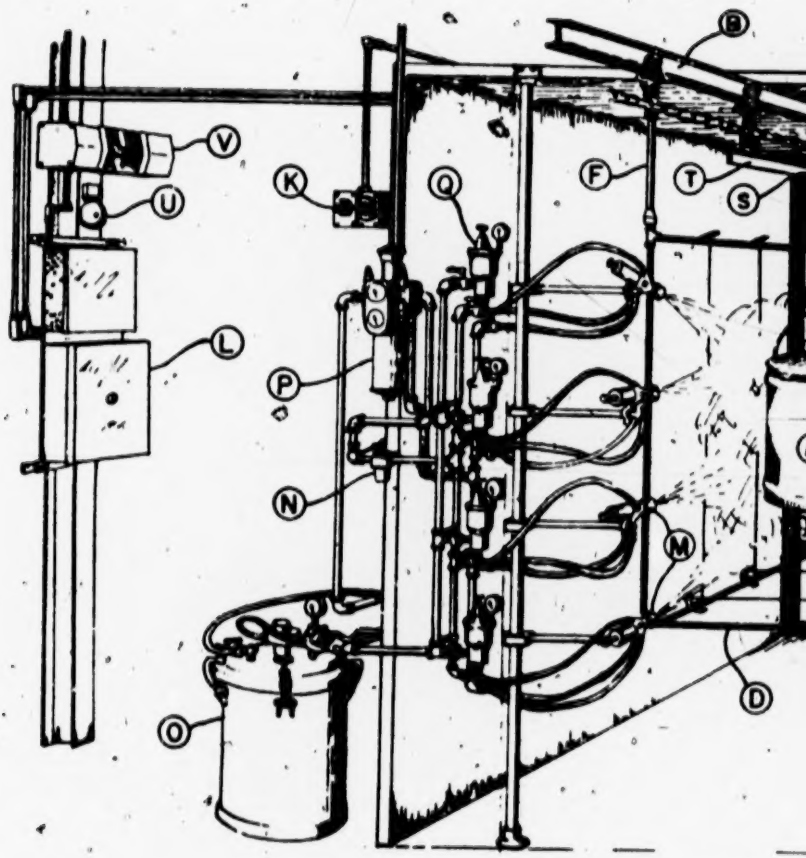
B
V
U
K
Q
F
T
S
L
P
N
M
D
O

PLAINTIFF'S EXHIBIT GGG.

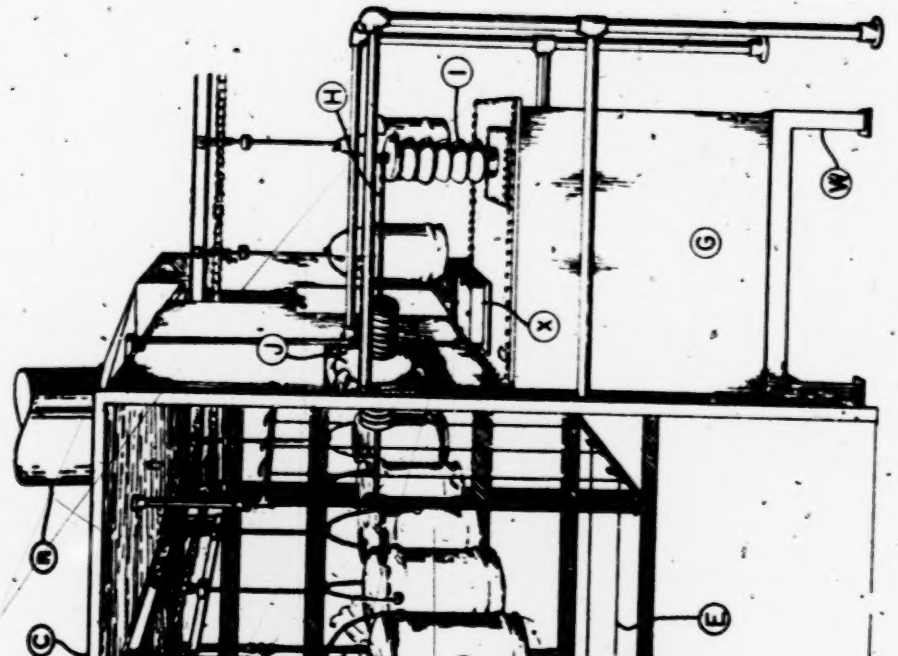

Fig. 1
Typical Installation
Employing Overhead Monorail Conveyor

PLAINTIFF'S EXHIBIT III-1.

Ransburg Electro-Coating Corp.
Indianapolis, Indiana.

June 15, 1954

Sales Bulletin No. 132.

To: RHS EJS MFP GEK GR EPM HEM RO EMR DCH JEM DEC MR HJR

Subject: Pricing Guide For No. 2 Spray Process.

Gentlemen:

The attached is a revised approximate pricing schedule for the No. 2 Process. It has been corrected to be consistent with our current costs and to bring each estimated price nearer to an average condition. Please void or destroy that sent you on May 13.

When using it, please emphasize that it is just a rough approximation. In some cases the final quotation may vary as much as $1000 in either direction, depending on the size of atomizers, the kind of pumps, the number and type of pedestals, etc. Also, it is always possible that the type of equipment required may be quite different after running tests and demonstrations in Indianapolis.

The section headed "Add for Reciprocator" means that this should be added to the initial fee. It has no connection with the cost to the customer for purchasing reciprocators. Our justification for the addition is: (1) We have experienced heavy engineering costs in designing this equipment, (2) after several months we are still searching for a reliable supplier who will take our engineering design and produce the reciprocators on a production basis (to the extent our sales will permit), and (3) a reciprocating

disc will often replace two or more stationary discs, several triple heads, or grouping conveyors, and therefore cost the customers less. It is not contemplated that these reasons or any detailed breakdown of the initial fee should ever be given the customer.

Yours very truly,

Harold.

Harold P. Ransburg.

HPR:eh

Strictly Confidential.

No. 2 Process.

Approximate Pricing Schedule

Triples*	Pumps	Initial	Discs	Pumps	Initial
1	1 (Std)	8,100	1	1	7,500
2	1 (Std)	9,300	2	1	8,200
3	1 (Ins)	11,200	2	2	8,800
3	2 (Std)	11,400	3	3	10,200
4	1 (Ins)	12,200	4	2	10,400
4	2 (Std)	12,500			

If insulated pumps required where standard specified, add $750 for each pump.

Add for reciprocator:
36" or less.....$ 500
Between 36" & 60".... 1000
Above 60" 1500

* For use with single phase triples only.

Definition of a "Unit."

A unit is comprised of that equipment associated with one pack (not more than 4 triples or 4 discs).

Form No. PF54 Rev. A
6-4-54

PLAINTIFF'S EXHIBIT III-3.

Price Work Sheet—No. 2 Process.

Letter to: B. J. Zadoff.
Company Name Grand Sheet Metal Prod. Co.
Date 11-3-54
Address Chicago, Ill. (Melrose Park)
Drawing No. 231039
Product TV and Air Conditoning Cabinets
Figured by DCH Approved

Single Phase Equipment

Atomizing Heads	Qty.	Unit	Ext.
Single Head (Model 121) complete with Pedestal		495	
Triple Head (Model 101)		730	
For each pedestal required add:		112	
For each set tie rods required add:		80	
Atomizing Bells			
(Include one of each size required as a spare)			
2 inch Bell		46	
3 or 4 inch Bell		38	
6 inch Bell		47	
8 inch Bell		60	
10 inch Bell		67	
12 inch Bell		86	
Pump Units			
Standard (Model 105, PIV type) for up to 6 pumps		845	
Insulted (Model 106, PIV type) for up to 12 pumps		1583	
Spare Parts			
Single Head (Model 121)		181	
Triple Head (Model 101)		391	
Pump (105-94), one required for each Pump Unit		29	

Three Phase Disc Equipment

Disc Rotator, complete with Pedestal	2	542	1084
(Include one of each size disc required as a spare)			
8 inch Disc		53	
15 inch Disc		74	
20 inch Disc		165	
25 inch Disc	3	193	579
Pump Unit			
(Model 143 Reeves type) for one or two rotators	2	570	1140
Spare			
Disc Rotator	1	236	236
Pump (105-94) one required for each pump unit	2	29	48
Total			3087
For single phase equipment, add $5500 for each unit*			
For disc, add $5800 for each unit*			5800
If reciprocating, add: for length of stroke 36" or less	$ 500	2	1000
36" to 60"	$1000		
Over 60"	$1500		9887
Total			$9900
Monthly Fee: % of Coating Material Cost			10%
Monthly Fee: Minimum			$ 175

*A unit is comprised of that equipment associated with one park, (not more than 4 triples or 4 discs).

PLAINTIFF'S EXHIBIT III-4.

Special Delivery November 3, 1954
Mr. B. J. Zadoff
Grand Sheet Metal Products Company
2501 West 24th Street
Chicago 8, Illinois

Dear Mr. Zadoff:

We are enclosing two prints of our Drawing No. 231039 showing a proposed layout for two loops for coating your TV and air conditioning cabinets with our No. 2 Process reciprocating disc. The layout we have shown for the loops is merely a suggestion since, of course, the loops may be rearranged in any way so long as the loop diameter is held and so long as the different sides of the cabinets will be sprayed in the proper order. The layout drawing also shows the reciprocator pits. The dimensions of these pits are based on a reciprocator design of our own and might be somewhat different for another design.

As you will recall, both the TV and air conditioning cabinets entered the loop so that one side of the cabinets was coated during the first half of the loop and then the cabinets were indexed 180 degrees and the opposite side coated. After leaving the first loop the cabinets were indexed 90 degrees and the third side was coated in the first half of the second loop and then the cabinets were indexed 180 degrees to coat the fourth side in the second half of the second loop.

The cabinets which we coated during your visit were hung on 42 inch centers and the conveyor speed was 16 fpm. The coating material delivery for the air conditioning cabinets was 180cc per minute for the narrow sides which were coated in the first pass through our loop and 200cc

per minute for the wider sides which were coated in the second pass through our loop. Therefore the total number of air conditioning cabinets obtained per uncut gallon of paint was:

$$\frac{16 \times 12 \times 3785 \times 7}{42 \times 380 \times 4} = 80$$

For the TV cabinets to a total of 400cc per minute of coating material was used (the same delivery was used for all sides). The TV cabinets obtained per uncut gallon of coating material was therefore $\frac{16 \times 12 \times 3785 \times 7}{42 \times 400 \times 4} = 75$

In the above calculation, $\frac{16 \times 12}{42}$ is the number of cabinets per minute, $\frac{3785}{380 \text{ or } 400}$ is the number of minutes required to spray a gallon of reduced material and 7/4 is the ratio to convert the reduced material to unreduced material since the coating material was reduced 4:3.

Our film thickness checks show approximately .6 mil was obtained on both the TV and air conditioning cabinets which we understand is about the film thickness you desire.

We know you will realize a very substantial paint savings over the No. 1 Process with our No. 2 Process disc. We estimate that you will obtain 35% to 40% more cabinets per gallon of coating material with the No. 2 disc and at the same time obtain a much more uniform film.

If it is decided that you will not have a partial panel in the bottom of the air conditioning cabinets as did some of the samples sent to us, then the coating material usage could be reduced for these cabinets by simply not indexing these particular cabinets in the middle of the second loop.

As you will recall, some touch-up would be required around the front of the TV cabinets and around the louvers of the air conditioning cabinets. The insides of both cabinets would require complete coating by some other method.

We are sending you separately an agreement for the use of the No. 2 Process disc in the manner shown on the enclosed drawings. We anticipate that we could deliver our portion of the equipment which includes the voltage supply, fluid pump, controls, atomizing discs, high voltage leads, fluid hose, and support insulators in about three weeks after the agreement is signed. It will be necessary for you to purchase two reciprocators as well as to have your conveyor rearranged in accordance with the enclosed drawings and to provide a shroud for each conveyor loop and ventilation adequate for removing solvent vapors. There is no other spray material to be exhausted.

We anticipate the item which will take the longest time for delivery will be the reciprocators inasmuch as we do not presently have any 36 inch or 48 inch stroke reciprocators in our stock. We know of one firm on the West Coast by the name of Lee Welding & Engineering Company who have provided reciprocators to other Users who quote delivery of sixty days after receipt of the order for a hydraulic reciprocator. Their price for a 36 inch remote control hydraulic reciprocator which will allow the reciprocator stroke to be adjusted without stopping the conveyor line or the reciprocator is approximately $1,600 F.O.B. Los Angeles.

We hope that the enclosed drawings and the above information is sufficient for your requirements, however, if you have any further questions or if you feel we can help you in any way, please contact us or Mr. M. F. Pleva in Western Springs.

I sincerely enjoyed spending part of the day with you, Mr. Koranski and Jim Scavo and hope that I will see you all again in the not too distant future.

Very truly yours,

D. C. Howarth.

DCH:q
cc: Mr. M. F. Pleva.

PLAINTIFF'S EXHIBIT JJJ-2.

Ransburg Electro-Coating Corp.
Indianapolis, Indiana.

July 15, 1953

Pricing Guide for No. 2 Spray Process.

To All Distributors.

The attached is a new pricing schedule showing a slight change in the fees for the No. 2 Process. The prices shown on the attached schedule are intended merely as a guide for making preliminary estimates and no price should be considered as a firm quotation until confirmed by the Home Office.

Similarly to our Bulletin and letters of May 27, 1953, we are now writing all of our No. 2 customers to insure that every customer has been advised that a license can be as readily obtained without equipment, installation supervision, replacement parts and service. We ask that you so advise all of your prospective customers according to the following:

If a customer desires a license without our equipment, the initial fee will be 40 percent of the initial fee shown on the attached schedule. The basic minimum monthly fee

without our equipment is determined by deducting .6 of 1 percent of the standard initial fee (initial fee based on Ransburg supplying equipment) from the standard basic minimum monthly fee. The monthly fee without equipment is determined by deducting .6 of 1 percent of the standard initial fee from the amount that would be paid based on the percentage of the coating material used. The monthly fee which the user pays is, of course, the basic minimum or the amount based on paint consumption whichever is the greater.

Example: Ransburg Supplying Equipment.
Initial fee: $10,000
Basic minimum monthly fee: $230
Monthly fee: 25 percent of the cost of coating material used.

Without Ransburg Equipment
Initial fee: $4,000
Basic minimum monthly fee: $140
Monthly fee: 25 percent of the cost of coating material used, minus $60.

Yours very truly,
E. M. Ransburg.

EMR q

Number 2 Process

Approximate Pricing Schedule

121 Single Heads (1 Pedestal)	Number of Triple Heads	Pump Units	Power Supplies	Initial Fee Non-Cond. Paint	Initial Fee Cond. Paint	Minimum Monthly Fee Non-Cond. Paint	Minimum Monthly Fee Cond. Paint
1	0	1	1	5100	5900	150	150
2	0	1	1	5900	6700	150	150
3	0	1	1	6900	7400	150	150
4	0	1	1	7300	8100	150	150
5	0	1	1	8100	8900	150	200
6	0	1	1	8900	9700	200	200
6	1	1	1	6500	7300	150	150
6	2	1	1	8900	8860	150	200
6	3	1	1	-	11100	-	200
6	3	2	1	11300	12900	250	250
6	4	1	1	-	12500	-	250
6	4	2	1	12800	14600	250	300
6	4	3	1	14200	16300	300	350

140 Single Heads (2 Pedestal)	Number of Triple Heads	Pump Units	Power Supplies	Initial Fee Non-Cond. Paint	Initial Fee Cond. Paint	Minimum Monthly Fee Non-Cond. Paint	Minimum Monthly Fee Cond. Paint
1	0	1	1	5500	6300	150	150
1	0	1	1	6400	7200	150	150
2	0	1	1	7700	8500	150	150
2	0	1	1	8300	9400	150	200
3	0	1	1	9500	10300	200	200
3	0	1	1	10800	11600	200	250
2	0	2	1	10100	11700	200	250
3	0	2	1	11000	12600	200	250
3	0	2	1	12200	13800	250	300

Pricing Schedule

Integral Motor Discs

Discs	Number of Pump Units	Initial Fee Non-Cond. Paint	Initial Fee Cond. Paint	Minimum Monthly Fee Non-Cond. Paint	Minimum Monthly Fee Cond. Paint
1	1	5900	6100	150	150
2	1	6900	7100	150	150
4	1	8900	10100	200	200
4	2	10000	10500	200	200

Form No. PF53

July 15, 1953

PLAINTIFF'S EXHIBIT KKK.

May 27, 1953

General Electric Company
Small Appliance Division
1285 Boston Avenue
Bridgeport 2, Connecticut

Attention: Mr. P. H. Cozier
Manager-Finance
Electric Housewares Dept.

Gentlemen:

This is in reply to your letter dated May 11 to our Mr. John E. Maxwell, regarding our Agreement No. 4806. In addition to a few minor points on the second page, your letter is to the effect that you have two principal objections to the provisions of the subject agreement.

As our Mr. Maxwell has no doubt informed you, the subject agreement form is standard with us, as are the prices quoted therein. We interpret the obligations of the respective parties of an agreement such as this, whether outlined under the paragraph concerning fees or in other paragraphs, as representing the mutual obligations of the parties and if subject matter other than the fee paragraph is modified in a manner preferable to a customer, the fee paragraph should be modified accordingly to insure as nearly as possible equal treatment to our customers.

We are prepared to modify Paragraph 5, entitled Liability, and assume liability to the extent of $100,000 for any damages resulting from our negligence in the manufacture and or installation of our equipment or from inherent defects in such equipment. In order to cover this additional risk, we intend to take out a special insurance

policy. As a result, our monthly fee will necessarily be increased $10.00 per month. This is in conformity with our policy of treating all of our customers as equally as possible.

You also advise that your second principal objection is that in our "Future Inventions" clause we do not provide for paying you any royalties in the event we should wish to use a future development which might be made by you. Your proposed redraft of this clause suggests that we would have the right to use such future invention or inventions made by you "for a reasonable royalty". We are agreeable to amending this paragraph as you suggest, but likewise feel that it is necessary for us in using our best efforts to be equitable to our other customers who do not anticipate charging us for a future development that might be made by them, that we amend our initial fee paragraph in an amount commensurate with the possibilities of necessary payments to you by us or other of our licensees. Accordingly, we believe it would be equitable to change the initial fee from $5300 to $9300.

With respect to "Supervision", it will be appreciated if you will take this letter as assurance from us that trips necessitated by defects in our equipment at the time of the initial shipment or delays occasioned by our representatives will not be chargeable to you. We feel that one point should be clarified in this matter, however, and that is in the event defects result from ordinary wear and tear on the equipment, which defects do eventually develop in most units, and if the replacement parts supplied by us under those circumstances could have been installed by your employees but you desire the presence of one of our employees, we will expect to be reimbursed at the rate of $75 per day including travel time, plus necessary transportation expenses.

We trust that you will take this letter as our assurance that we will not unreasonably object to the removal or transfer of our equipment from your Brockport plant to another plant where you wish to manufacture your food-mixers. We have cooperated with many, many customers in this regard in the past, in fact, in every instance in which we have been requested to do so; but where a customer wishes to make such transfer and desires one of our representatives or supervisory engineers for the reinstallation of our equipment, we have applied the $75 per day service figure.

If, after considering the foregoing, you believe, as we do, that a mutually satisfactory agreement can now be drawn, and you will advise us of your wishes, we shall be pleased to prepare an agreement along the lines suggested above or modified in any other mutually satisfactory manner you desire.

Yours very truly,
Ransburg Electro-Coating Corp.,
E. M. Ransburg.

EMR/mm

PLAINTIFF'S EXHIBIT NO. LLL-1.

Tickler Copy.

March 23, 195

Webster-Chicago Corporation
5610 Bloomingdale Avenue
Chicago 30, Illinois

Attention: Mr. Clarence Wallin
Chief Industrial Engineer

Gentlemen:

We have been advised by our Chicago representative, Mr. Milton F. Pleva, to provide you with information regarding our marketing policies for our No. 2 Electrostatic Disc. These quotations will include insulated pumps since some of your coating material is conducting.

In the case where we supply equipment, our initial fee for a single disc unit would amount to $6100 with a minimum fee of $150 per month or 50% of the cost of the paint used through the unit per month, whichever is greater.

Our initial fee for a set-up including two disc units with one voltage pack and one insulated pump would be $7100. If the two discs had to be operated more than about 20 feet apart, then two insulated pumps would be highly recommended and the initial fee would be $8400. If it was necessary to operate more than 60 feet apart, then two voltage packs would be required and the initial fee would be $10,400. The monthly fee in each case would be $150 minimum (except where the initial fee is $10,400 the minimum monthly fee would be $200) or 50% of the cost of the coating material used through the units, whichever is greater.

We are enclosing a copy of drawing No. 230838 and 230835 for your information. Drawing No. 230838 shows a two disc set-up operating with one voltage pack and two pumps. Drawing No. 230835 shows a disc set-up with one voltage pack and one pump unit. Other variations in lay-out are possible using two discs, and seldom is it necessary to use two voltage packs and two pump units.

If a customer desires a license without our equipment, installation supervision, and replacement parts or service, the initial fees would be 40% of the standard initial fee quoted above. The basic minimum monthly fee or percentage can be accurately quoted after we have determined what size or type installation would be best for finishing your products.

We are enclosing for your information a sample agreement which would apply in the case of Ransburg supplying equipment, installation supervision, replacement parts and service. We believe this agreement is self-explanatory and that it deserves no further comment at this time. However, if you should have any questions pertaining to any phase of the agreement, we will be happy to discuss them with you. For your information, our equipment is not available on the open market, and whereas you could fabricate this equipment it would cost thousands of dollars to manufacture and you would not be guaranteed its functioning properly. We have spent years in developing and engineering this equipment and are constantly striving to improve its operation. You as a customer can capitalize on our experience.

We know from our previous experience with companies finishing parts similar in size to yours—for example, the Standard-Thompson Corporation, Dayton, Ohio; the Sunbeam Corporation, Chicago; the Detroit Hardware Company, Detroit; Enameled Steel & Sign Company, Chicago; and many others—that we can provide you with a saving of about 75% of your present paint bill.

We are certain that we have the most economical means known on the market today for coating your products and are looking forward to being of service to you on this project.

Very truly yours,

Ransburg Electro-Coating Corp.
John E. Maxwell.

EJS/JEM:eh
Enclosures
CC: Milton F. Pleva

PLAINTIFF'S EXHIBIT NO. LLL-2.

May 27,1953

Webster-Chicago Corp.
5610 Bloomingdale Avenue
Chicago 39, Illinois

Gentlemen:

We wish to inquire whether you would like to convert your present electrostatic spray license to one under which we would furnish you no equipment and under which we would assume no obligation for replacement parts, supervision or service, or patent infringement indemnification. If you should elect to assume responsibility for these items for yourself and return our equipment, your basic minimum monthly fee of $100.00 would be reduced to $80.00.

If you are interested in such a proposal, upon advice from you we will send our alternate license agreement.

Yours very truly,

Ransburg Electro-Coating Corp.
E. M. Ransburg

EMR/wn

PLAINTIFF'S EXHIBIT NO. LLL-3.

Webster-Chicago Corporation
Manufacturers of Webcor Products
5610 W. Bloomingdale Ave., Chicago 39, Ill.
Phone Tuxedo 9-8500

June 3, 1953.

Ransburg Electro Coating Corp.,
Barth and Sanders,
Indianapolis 7, Indiana.

Attention: Mr. E. M. Ransburg

Gentlemen:

We are interested in obtaining additional information regarding the conversion of our present electrostatic spray license outlined in your letter of May 27.

Kindly have your Chicago representative visit our plant for further discussion of this subject.

Yours very truly,
Webster-Chicago Corporation
Clarence Wallin
Industrial Eng.

CW/lw

Manufacturers of Diskchangers, Fonografs, Magnetic Records, Dictation Machines, Laminations

PLAINTIFF'S EXHIBIT NO. LLL-4.

Ransburg Electro-Coating Corp.
Indianapolis 7,
Office Correspondence

Date: June 26, 1953

Attention: Mr. E. M. Ransburg

Subject: Webster-Chicago Corp.
Chicago 39, Ill.

Dear Ed:

Reference is made to your letter dated June 11th to which you attached a copy of their letter to us dated June 3, 1953.

I visited Mr. Clarence Wallin and explained the alternate method whereby we would license them to use our Process, they to furnish their own equipment. Mr. Wallin wanted to know the monetary details of this alternate scheme and when I advised him that our basic monthly fee would be reduced from $100 to $80, and that no refund on the initial fee was in the picture, he, of course, lost all further interest. In fact, he wanted to know why we had even bothered to write them concerning such a "ridiculous proposition."

I explained to him that we have always offered our Process either with or without equipment but our records indicated that certain customers had not been advised of this and we were simply trying to give everyone the same opportunity to select whichever proposition they preferred.

The meeting ended amiably with Mr. Wallin convinced that we weren't trying to pull any kind of trick.

Kindest personal regards
Milt

MFP:JP
ss: JE Maxwell

Milton F. Pleva

PLAINTIFF'S EXHIBIT NO. XXX.

Air Mail Special Delivery

June 17, 1955

Westinghouse Electric Corp.
Metuchen,
New Jersey

Attention: Mr. E. J. Murray
Supervisory Buyer

Gentlemen:

In answer to the matters raised in our telephone conversation with you yesterday, we are agreeable to amending the terms of our Electro-Spray Agreement, Serial No. 5826 in the following particulars:

Paragraph 4. Delete "or resulting from any act or omission of Ransburg's employees or agents while on the premises of User" from the end of both the first and second sentences of Paragraph 4.

Paragraph 6. In line 3 of the first subparagraph of Paragraph 6 change "date of shipment" to—date of receipt at User's Metuchen plant—. In the second line of the second subparagraph of Paragraph 6 change "date of shipment thereof by Ransburg" to—date of receipt of Ransburg's equipment at User's Metuchen plant—. It is understood that you will notify us of the date of receipt of our equipment at your plant.

We regret that we cannot accept the amendment which was suggested in reference to Paragraph 3 that Westinghouse does not admit the validity of our patents. It is our policy not to agree that a licensee can contest the validity of our patents and at the same time enjoy the benefits of such patents. We have never given such a concession in

any of our No. 2 Process agreements and in the interest of fair and equal treatment of all our customers we believe it unwise to accept such amendment.

If the foregoing amendments are acceptable to you, kindly sign all four copies of this letter in the space provided below and return two copies of the letter to us with four signed copies of the agreement. I trust that we will be able to move forward to the installation of our equipment in your plant.

Very truly yours,
Ransburg Electro-Coating Corp.
Harold P. Ransburg

HPR:dh
Accepted and agreed to
this ..... day of ....., 1955
Westinghouse Electric Corp.
By .....

PLAINTIFF'S EXHIBIT OOO.

Ransburg Electro-Coating Corp.
Ransburg.
Barth and Sanders Street
Indianapolis 7, Indiana
Telephone: Melrose 2-7513 Cable address: Ranscoat

Mr. Elmer Houlberg
Chicago Rawhide Manufacturing Co.
Elgin, Illinois

Dear Mr. Houlberg:

Mr. John Maxwell has asked me to write you concerning the tests which we conducted for you here in our laboratory. He regrets that he was unable to do this for you before leaving on his vacation but I trust that the information that I will give you will be satisfactory for your needs.

You will recall that here in our laboratory we used our No. 2 type disc equipment for the application of coating material to your seals. In this operation the seals were assembled one on top of the other so as to form a cylindrical group. 24 of the large seals were assembled to a hook and 38 of the small ones were assembled to each hook. This assembly formed essentially a cylindrical item which was then hung from an overhead conveyor on 12" centers. These parts were carried by this conveyor at the rate of 5' per minute into and around a loop in the conveyor which was 4' in diameter. At the center of this loop one of our disc type atomizers which was 15" in diameter was positioned. The disc was tilted at an angle of 20° with the horizontal so as to provide adequate coverage over the entire length of the assemblage. As the parts were carried about the loop they were rotated so as to expose their various sides to the atomized coating material from the disc. This rotation was accomplished by a simple rotating hook which contacted a drag bar as the parts passed around the loop in the conveyor.

The parts which were prepared during your visit were actually carried around the conveyor once and then the process was repeated in order to build up the required coating on the parts. In the case of the large parts, the coating material delivery to the disc was 180 cc's per minute. This material was your green lacquer reduced 1 part of lacquer to ¼ part Butanol, ¼ part Butyl Acetate and ½ part Xylol. Essentially, therefore, the paint was cut 1 to 1 with a thinner composed of the materials recited above.

Since there are 3,785 cc's per gallon of material, we could operate our equipment for 21 minutes on a reduced gallon of material. At a conveyor speed of 5' per minute and 24 parts per hanger we are producing parts at the rate of 120 per minute. Under these circumstances therefore we are obtaining 21 x 120, or 2,520 parts per reduced gallon per

pass about the loop. Since two passes were required to produce the desired film we were obtaining 1,260 parts completely coated per cut gallon of coating material. Since the material was cut in the ratio of 1 to 1 this means that we were obtaining 2,523 parts per uncut gallon of coating material as supplied to us.

The delivery on the small parts was reduced to 100 cc's per minute in order to receive adequate coating. Under these circumstances therefore we could operate for approximately 38 minutes on a gallon of material and since we were obtaining 190 parts per minute, a calculation similar to the above will indicate that we were able to obtain 7,190 completed parts per virgin gallon of coating material.

As was discussed with you during your visit, the installation of our processes in your plant is made on the basis of an initial fee and a monthly license fee. For a single loop unit our initial fee would be $7,300.00. For a double loop unit our initial fee would be $8,500.00. Under both circumstances our monthly fee would be $175.00 or 50% of the cost of the coating material sprayed with this equipment, whichever was the larger. In the case of a single disc installation it would be necessary for you to carry the parts past on the conveyor twice in order to have them receive adequate coating. This could be done by removing every other work hanger from the conveyor and allowing the intermediate ones to pass around the loop a second time. In event that you had two loops, naturally, the operation would take place in a continuous and uninterrupted manner. We would propose to supply to you under the above terms the atomizing discs and their rotators, the fluid pumps for each disc, the high voltage supply and the electrical controls for this equipment. We would also supply such fluid hose and fittings as was necessary for installation. We would also send a man to your plant to supervise the installation of this equipment and train your operators in its use.

So that you will understand the terms under which this equipment is supplied, we are pleased to enclose sample agreements. In event that you decide to proceed with the installation of this equipment, we certainly would be most happy to prepare formal agreements for you and send them to you promptly.

We are having our Engineering Department prepare drawings for you to illustrate the manner in which this equipment could be installed in your plant. In these drawings we are simply showing a single loop with the thought that you could extend this to a 2-loop operation if it is your desire to do so.

We understand that you are going to give some thought to workholders for this particular operation. We want to extend our cooperation to you in this regard. If you have sketches of your ideas for such workholders, we certainly would be most happy to criticize them from the standpoint of our equipment. Actually, if you so desire we would be most happy to try them here in our laboratory to make certain that they will be satisfactory.

We believe that this is an ideal application for our equipment and know that through the use of our processes you would be able to coat these items at considerable savings over other methods which are available to you.

We look forward to working with you on this particular application and trust that you will see fit to contact us if we can serve you further in this connection. Since Mr. Maxwell will be out of the office for approximately three weeks, I trust that you will feel free to contact the writer if you have questions that will arise before that particular time. Mr. Maxwell has asked that I handle this matter for him.

Very truly yours,

Emery P. Miller.

EPM:ab
Enclosures
CC: Milt Pleva

PLAINTIFF'S EXHIBIT PPP.

H. F. Tierney

Purchase Order

No. 100410-134

Chicago Rawhide Manufacturing Company

This number must appear on all invoices, packages, packing slips, shipping papers and correspondence.

Sirvis Mechanical Leather Products
Sirvene Synthetic Rubber Products
Perfect Oil Seals

1301 Elston Avenue, Chicago 22, Illinois
Phone: BRunswick 8-2100

Date
er 11-1-55

Confirming	Terms	F.O.B.	Ship Via	When Ship
XX				

Please send the following and
Charge to Our Account.
Invoice In Triplicate
2 Priced and 1 Unpriced

To Ransburg Electro-Coating Corp.
Barth & Sanders Sts.
Indianapolis 7, Indiana

Attn: Mr. John E. Maxwell

Ship to Same: Dept. 134
900 N. State St., Elgin, Ill.

Chicago Rawhide Mfg. Co.,
Per N. R. Hanson,
Purchasing Agent

☒ For Consumption

☐ For Resale—Applying to Purchases in Illinois Only—Certificate No. 13055

Quantity	Articles	Price
	To cover installation of one unit, Electro-Coating equipment per Ransburg drawing #231349 for electro-statically coating metal oil seals in accordance with Ransburg Electro-Spray Agreement, Serial #5940	
	Installation Cost	$7300.00
	Basic minimum monthly fee	175.00
	Confirms wire 10-20-55 to Mr. D. Howarth	

Wage-and-Hour Law. Your invoices must carry certification that goods were not produced under less than the minimum conditions required by the wage-and-hour law. Invoices not carrying this certification cannot be passed for payment.

Material furnished under this order is subject to our inspection and approval within 10 days after delivery at destination. If materials are rejected, they will be held for disposition at your risk and expense.

By accepting and filling this order, or any part thereof, the seller hereby agrees to, and shall be bound by the terms and conditions printed on the reverse side hereof.

Vendor—Please detach, fill in and return the attached acknowledgment.

PLAINTIFF'S EXHIBIT PPP-2.

H. F. Tierney

Ransburg Electro-Coating Corp.
Ransburg
Telephone: Melrose 2-7513 Barth and Sanders Streets
Cable address: RANSCOAT Indianapolis 7, Indiana

November 4, 1955

Chicago Rawhide Manufacturing Co.
1301 Elston Avenue
Chicago 22, Illinois

Attention: Mr. E. Houlberg

Gentlemen:

We are pleased to acknowledge receipt of four signed copies of Agreement No. 5940. Mr. Harold P. Ransburg has signed this Agreement on behalf of our company and we are returning two signed copies to you herewith.

We note that your purchase order No. 100410-134, dated November 1, 1955, contains provisions which might be considered at variance with, or in addition to, the provisions of our Agreement No. 5940. Inasmuch as this Agreement sets forth the entire contract between us, we assume that you issued such order merely to facilitate your own record keeping and not, in any wise, to modify our Agreement. On that assumption we are returning the acknowledgement copy of the purchase order herewith unsigned and we shall ship our portion of the equipment under the Agreement at a time to be specified by you and your acceptance of the equipment will confirm our assumption that our Agreement No. 5940 is not modified by your purchase order.

We appreciate this opportunity of being of service to you.

Yours very truly,

HED/eh Ransburg Electro-Coating Corp.,
Encls. Harry E. Downer.

PLAINTIFF'S EXHIBIT PPP-3.

PLAINTIFF'S EXHIBIT SSS.

Serial No. 4340

Ransburg Electro-Spray Agreement.

This agreement, entered into this 7th day of April, 1952, by and between Ransburg Electro-Coating Corp., an Indiana corporation, having its principal place of business at Indianapolis, Indiana, hereinafter called "Ransburg," and Hotpoint, Inc., Milwaukee, Wisconsin, hereafter called "User," Witnesseth That:

Whereas, Ransburg is the owner of, or otherwise has the right to grant licenses under, certain inventions, letters patent of the United States, or patent applications pertaining to and covering methods and apparatus used in coating articles with electrostatically atomized and electrostatically deposited liquid coating material, the process so used being hereinafter referred to as "said Process," has acquired much engineering data and experience pertaining to said Process, has designed special equipment therefor, and is conducting research in that field; and

Whereas, User desires to use said Process and in so doing to avail itself of the experience gained by Ransburg in this field and requests that Ransburg furnish certain special equipment herein below described.

Now, therefore, it is mutually agreed as follows:

1. License: In consideration of the payment by User of the fees herein provided, Ransburg hereby grants to User, subject to and in accordance with all of the terms and conditions of this agreement and while the same is in effect, the right to use said Process at User's plant in Milwaukee, Wisconsin, with one unit as shown in Ransburg's drawing No. 230238, subject to such changes therein and such further specifications as Ransburg may pre-

scribe, for electrostatically spraying Water Heater Jackets with Two Units.

2. Equipment: Ransburg will furnish User, for its use of said Process, high voltage, atomizing, and liquid supply apparatus and electrical controls therefor and such other equipment as Ransburg deems desirable, which will be shipped prepaid to User's aforesaid plant upon request of User. Ransburg will furnish replacements, without charge, of any defective parts of its equipment, except where the defect results from improper use or operation or negligence of User, and provided User returns such defective parts to Ransburg within thirty days after they become defective. The furnishing of equipment and replacements by Ransburg is subject to the availability to Ransburg of the necessary component parts of the equipment and replacements and to prior shipment commitments of Ransburg. User shall furnish all labor, materials, and equipment necessary for the use of said Process except the equipment to be furnished by Ransburg in accordance with this paragraph.

3. Supervision: Ransburg will furnish supervision necessary to placing its equipment in readiness for operation. Should Ransburg's supervisor make more than one trip to the plant of User or be delayed there for any cause not chargeable to Ransburg, then for each day of such trip or trips or of such delay. User shall pay Ransburg the sum of Seventy-five dollars and any necessary transportation expenses incurred thereby.

4. Conversion: Ransburg will grant, upon written request by User, the right to use said Process otherwise than as described in Paragraph 1 unless in Ransburg's opinion the requested use involves unsafe practices or impractical conditions or is in conflict with the policies or commitments of Ransburg. Such conversion shall be made only after Ransburg has agreed thereto in writing.

5. Liability: User agrees that Ransburg shall not be liable to User for any claim resulting from the use, operation, or condition of the equipment furnished by Ransburg. User further agrees to reimburse Ransburg for any loss which may be sustained as a result of any liability to third parties for any claim resulting from the use, operation, or condition of the equipment furnished by Ransburg while said equipment is in the possession or custody of User.

6. Use of Equipment: User agrees to follow Ransburg's safety and operating recommendations and to maintain Ransburg's equipment in as good condition as when installed, ordinary wear and tear from proper use and operation alone excepted. User agrees that it shall not use or operate Ransburg's equipment with any of the parts or safety devices removed and to reimburse Ransburg for loss of or damage to Ransburg's equipment while in User's possession or custody.

7. Title: Title to all equipment furnished by Ransburg shall at all times remain in Ransburg, and said equipment shall remain personal property regardless of how it is affixed to the realty. Ransburg shall have at all times, during business hours, the right to enter User's premises for the purpose of determining whether its equipment and said Process are being used as herein provided. User shall not have the right, without the written consent of Ransburg, to (1) lease or grant the right to use the equipment furnished by Ransburg to any person, firm, or corporation, (2) remove it from the plant to which it is delivered for installation, or (3) use it for any purpose or in any manner other than as herein provided. Upon termination of this agreement, User agrees to deliver the equipment furnished by Ransburg, freight prepaid, to Ransburg at Indianapolis, Indiana, in as good condition as when installed, ordinary wear and tear incident to its proper use and operation alone excepted.

8. Performance: The performance of the obligations of both parties hereunder is subject to strikes and lockouts, whether in the organization of either party or elsewhere, and to accidents, fires, delays in manufacture or transportation, acts of God, embargoes or any governmental action, as well as any causes for postponement or non-performance over which the parties have no control; and any failure, due to any of such causes, of either party to perform any of its obligations herein set forth shall not be considered a violation of this agreement.

9. Termination: User shall have the right to terminate this agreement at any time upon thirty days written notice to Ransburg, provided User has fulfilled its obligations hereunder and returns Ransburg's equipment prepaid to Ransburg within thirty days after such notification in as good condition as when installed, ordinary wear and tear from proper use and operation alone excepted. Ransburg shall have the right to terminate this agreement at any time after three years from the date hereof upon six months' written notice to User.

In the event User shall fail to perform any of the conditions or obligations of this agreement, and such failure shall continue or recur after written notice thereof from Ransburg, Ransburg may (without prejudice to its rights recover any amounts owing by User as herein provided or any damages for breach of this agreement) terminate this agreement and take possession of its equipment, and for that purpose permission is hereby given Ransburg or any of its agents to enter any premises wherein its equipment is located, to discover and take possession of its equipment without notice and without being liable to any suit, action, indictment, or other proceedings by User or anyone claiming under it. Any delay, concession, or indulgence on the part of Ransburg in enforcing any of

its rights on any default shall not be deemed a waiver of such rights.

10. Fees: User agrees to pay to Ransburg an initial fee of Fifteen Thousand Dollars ($15,000.00) within sixty days after date of shipment of Ransburg's equipment or thirty days after date of installation thereof, whichever occurs earlier. In the event User has not requested shipment of Ransburg's equipment prior to the termination of the agreement or within six months of the date of this agreement, whichever is earlier, one-half of the initial fee shall become due and payable forthwith and the balance of it shall be due and payable as provided hereinabove. User further agrees to pay Ransburg, on or before the tenth day of each calendar month during the life of this agreement, a monthly fee equal to 10% of the cost to User of the coating material (including all its ingredients) used in said unit during the preceding month, but in no event less than One Hundred Dollars per unit ($100.00), which amount is due in any event and is hereinafter referred to as the basic minimum monthly fee.

Monthly fees under this agreement shall start with the date of installation of Ransburg's equiment or thirty days after the date of shipment thereof from Ransburg's plant, which ever occurs earlier, and the first payment shall be made on or before the tenth day of calendar month following. For the first and last payments of monthly fees under this agreement, the basic minimum monthly fee of One Hundred Dollars ($100.00) shall be prorated according to the portion of the month for which it is payable.

In addition to the above fees, User agrees to pay, or to reimburse Ransburg if it should be obliged to pay, directly or indirectly any taxes, licenses, or fees imposed by the laws of any State, of any political subdivision, of any municipality, or of any other governmental authority by reason

Indianapolis, Indiana, and effective under the laws of the State of Indiana as of the date first above written.

In Witness Whereof, the parties have caused this agreement to be executed as of the day, month, and year first above written.

Hotpoint, Inc.,
By W. R. Grand,
Vive President (Title).

Accepted at the Home Office in Indianapolis, Indiana, Ransburg Electro-Coating Corp. (Ransburg).

By E. M. Ransburg,
(Title) (Illegible.)

(Seal)
dh

Form No. 430.

Amendment to Ransburg Electro-Spray Agreement
Serial No. 4340.

A certain agreement, known as the Ransburg Electro-Spray Agreement, bearing Serial No. 4340, entered into on the 7th day of April, 1952, by and between Ransburg Electro-Coating Corp. and Hotpoint, Inc., is amended as follows:

Delete Paragraph 11 as printed and substitute therefor the following:

11. Future Inventions: User agrees that in the event User acquires, from its employees, title to any inventions, improvements, or United States Letters Patent, relating to improvements or modifications of methods and/or apparatus covered by Ransburg's Drawing No. 230238 or relating to improvements or modifications of the apparatus or mechanical equipment supplied User by Ransburg pursuant to the terms of this agreement, User shall disclose such inventions and improvements to Ransburg and grant Rans-

burg with respect to such inventions, improvements, and the subject matter of such Letters Patent, upon Ransburg's request and for a reasonable royalty, a non-exclusive license with the right to sub-license, such license to be assignable only with the good will and business of Ransburg in apparatus or method of the character covered by this agreement, and irrevocable except on voluntary surrender by Ransburg or failure by Ransburg to comply with the terms thereof. Patents subject to Ransburg's rights under this paragraph shall include only those acquired by User on said inventions or improvements conceived during the term of this agreement or within one year after the expiration thereof.

In Witness Whereof, the parties have caused this Amendment to be executed as of this 7th day of April, 1952.

Hotpoint, Inc. (User),
By W. R. Grant,
Vice President (Title),

Accepted at the Home Office in Indianapolis, Indiana,
Ransburg Electro-Coating Corp.,
By E. M. Ransburg,
Vice President (Title).

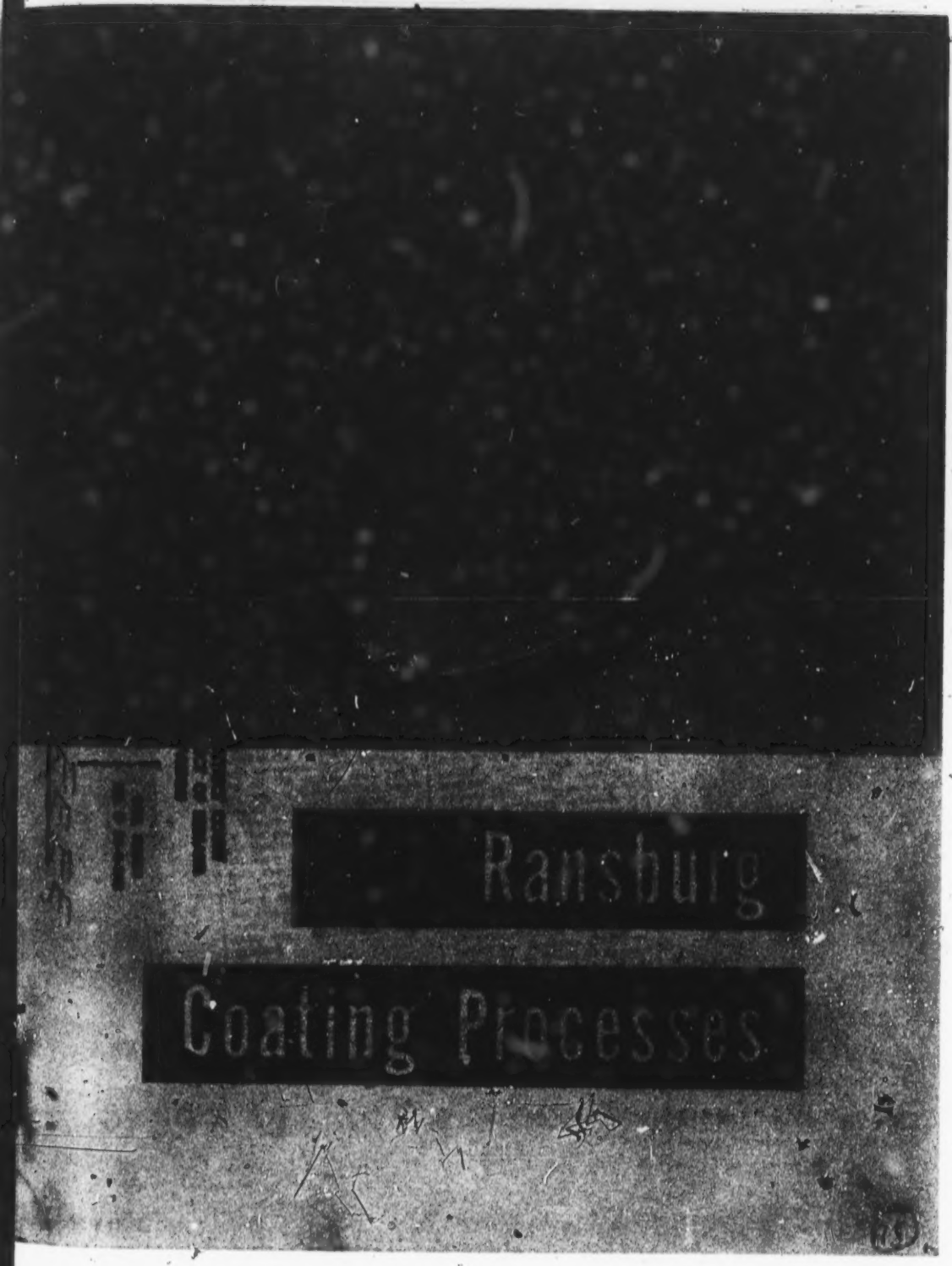
Ransburg
Coating Processes

"Industry's super paint brush"

BUSINESS

By Roger Budrow

Invention of Indianapolis Man Revolutionizing Painting Methods

Electricity has become industry's super paint brush.

Combined with the usual dipping or spraying process found in most factories, it does a better job with less labor and much less paint. The discovery, made by an Indianapolis man, was put to some use during the war but now, with the return of price-conscious competition, it is spreading rapidly.

The [illegible] the one fa-mi[illegible] of high school p[illegible] attract each oth[illegible] repel.

Put into practice, this principle makes the multitudes of tiny paint pellets, shot from the spray gun, go right to the object they're aimed at, with relatively few misses. They'll even go around a corner.

The repelling phase comes into use when articles are painted by dipping. It forces such an excellent job of draining off the excess that you'll see none of those telltale paint "tears" or wrinkled edges.

The method was discovered in the prewar period by Harold Ransburg, now 35, who was working at his father's factory the Harper J. Ransburg Co. here in Indianapolis. He was in charge of painting such household items as bread boxes, cooky jars, trays, cannister sets, etc., the firm's major products.

Worried by Waste

Disturbed by the amount of paint being wasted, Harold Ransburg, who had no technical knowledge, began reading up on electrical trodes which have enough attraction to pull off the excess "tears" and fatty edges.)

Saves Much Paint

Although he became interested in seeking a new method of painting primarily to save money for the Ransburg firm, Harold Ransburg quickly saw the potentialities of his discovery. But the war slowed its introduction.

However, word about the results where the process was installed soon spread. And no wonder. Generally speaking, 40% to 50% of the paint being used by ordinary methods is saved, although this has ranged as low as 25% and as high as 80%. Labor needs are reduced. One unit replaced fourteen men at one factory and the quality of the paint job is improved.

Among the firms already using the method are Reliance Steel, R. C. A., General Motors, Chrysler, General Electric, International Business Machines, Servel, U. S. Steel, Bridgeport Brass, Iron Fireman, White Motors, Wheeling Steel and many others.

[illegible]

819

These advantages of the Ransburg Electrostatic Spray Process produce reductions in finishing costs:

Normally 40 to 60 per cent, sometimes as much as 75 per cent.

Fully automatic—requires only one attendant who often can perform other duties. Booth clean-up reduced as much as 75 per cent.

Consistently *uniform* results. Rejects reduced.

Coats equally well at all practical conveyor speeds.

One compact unit often replaces several booths.

Far less exhaust requirements—conserves factory heat.

Results tell the Story...

These are only a few of the many applications where important savings in labor, materials, time and rejects have been effected by the Ransburg Electrostatic Spray Process.

In these, as in other Ransburg installations, savings of coating material alone run from 40 to 60 per cent—with far fewer rejects. Labor savings have been as high as 94 per cent.

Actual production records like these substantiate the efficiency and economies of Ransburg Electrostatic Spray.

on Job after Job . . .

and . . .

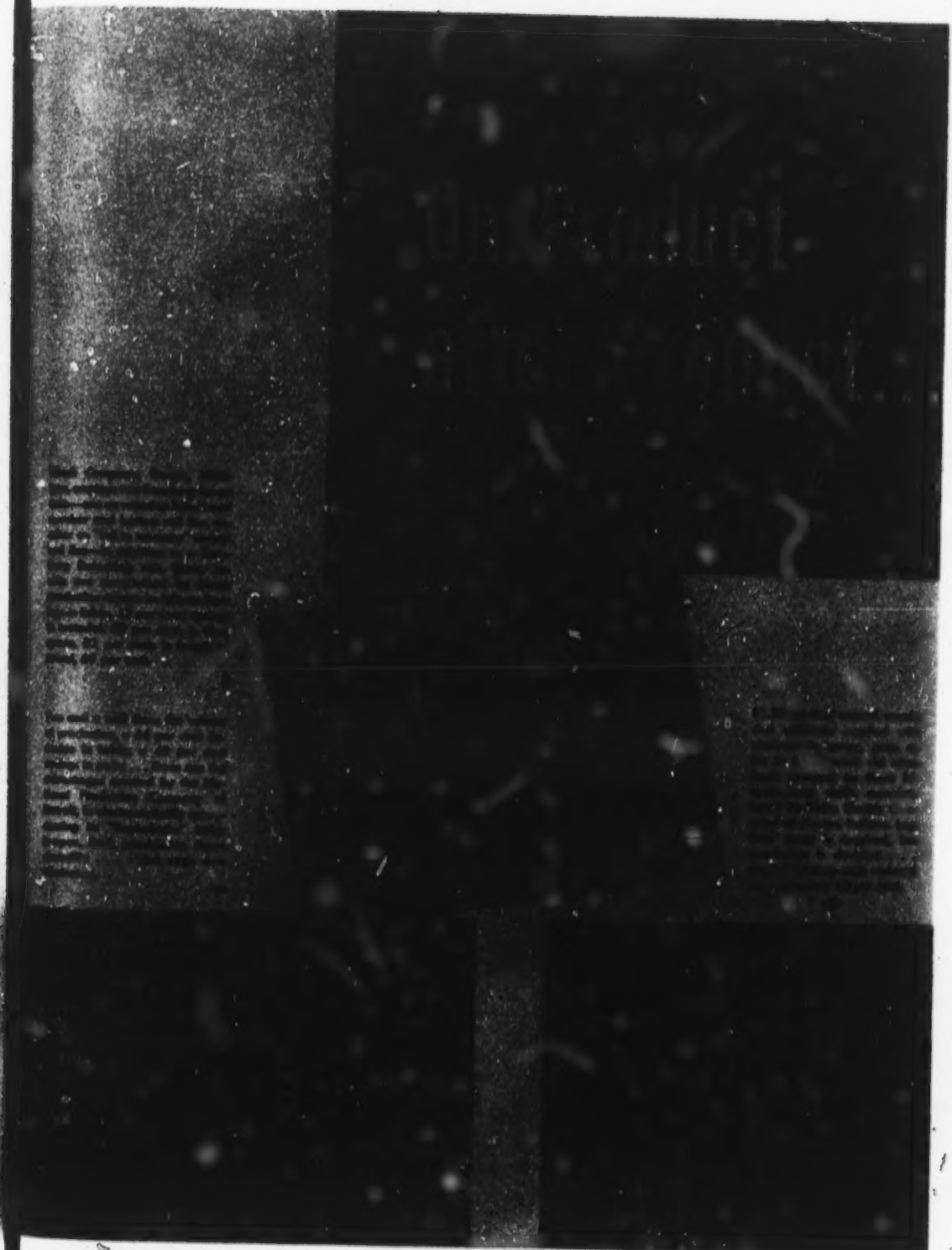

How Electrostatic Spray Works

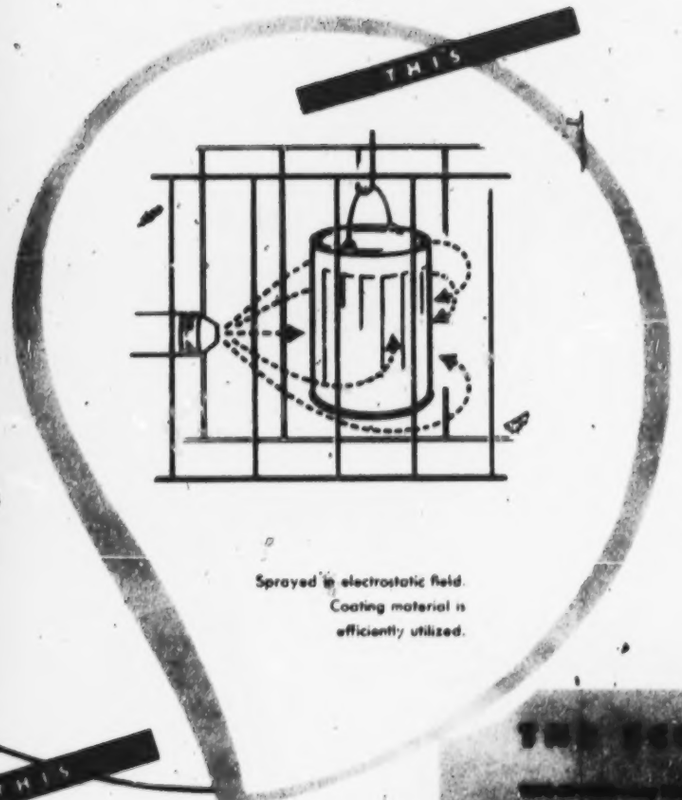

Sprayed in electrostatic field. Coating material is efficiently utilized.

Ordinary spray methods. Overspray wastes up to 65% of material.

■ Why do you get a coating that is just as heavy, but far more uniform and using 40 to 60 per cent less paint, with the Ransburg Electrostatic Spray Process? Because electrostatic forces, not high operating air pressure or the human element, control the application.

Articles to be coated are supported on workholders carried on a conveyor and are thus moved in endless procession through the spray booth. In the booth, the Ransburg electrode of fine wires is arranged on each side of the conveyor. Automatic spray guns are located at the face of the booth to spray the coating material into the booth in a direction roughly parallel to the path of travel of the articles.

Electrostatic deposition is accomplished by charging the fine wire electrode system to a high potential so that an electrostatic field is created between the electrodes and the grounded articles. Then, as the atomized coating material is sprayed into this field, the particles receive a negative charge and are attracted to the opposite polarity—the line of grounded articles.

The attraction in the coating zone is so great that some of the paint particles even reverse their direction, turning as much as 180 degrees, thus coating more than the facing surface of the articles. This feature is termed "wrap-around" and accounts for the uncanny ability of the process to coat edges and other areas so difficult and costly to cover with hand spray or old mechanical methods.

The sprayed material is directed down the line of articles and is attracted to them by the compelling forces of the electrostatic field. Very little coating material escapes beyond the electrode system. Overall efficiency is high. "Overspray" is put to work, so that it no longer occurs in the normal sense, and thus the phenomenal savings in coating material are accomplished!

There is no limit to conveyor speed so far as the Ransburg process is concerned and any desired increase in production is accomplished simply by introducing the proper amount of material into the electrostatic field. Thus, the labor saving becomes evident—Ransburg equipment requires only the part-time attention of one operator, regardless of the production volume desired!

In addition to material and labor savings, the more uniform film thickness of the electrostatically deposited coating tends to improve appearance and increase wearability and resistance to chipping or marring.

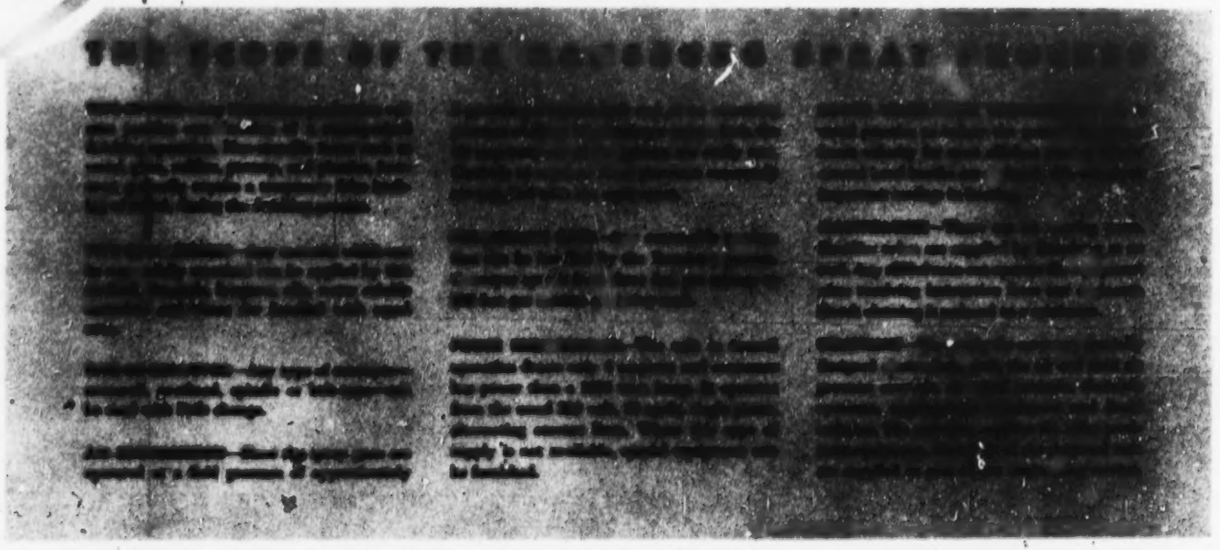

Electrostatic Detearing

The Ransburg Electrostatic Detearing Process offers a positive means of quickly removing accumulated excess paint, tear drops and fatty edges resulting from the use of dipping or flo-coating methods of applying finishes.

Electrostatic detearing has solved scores of coating problems where precision painting or final appearance are stringent specifications.

In industry today, the Ransburg Detearing Process is setting new quality standards and adding new sales appeal to many articles—at lower cost with increased production—from aerosol bombs to refrigerator shelves.

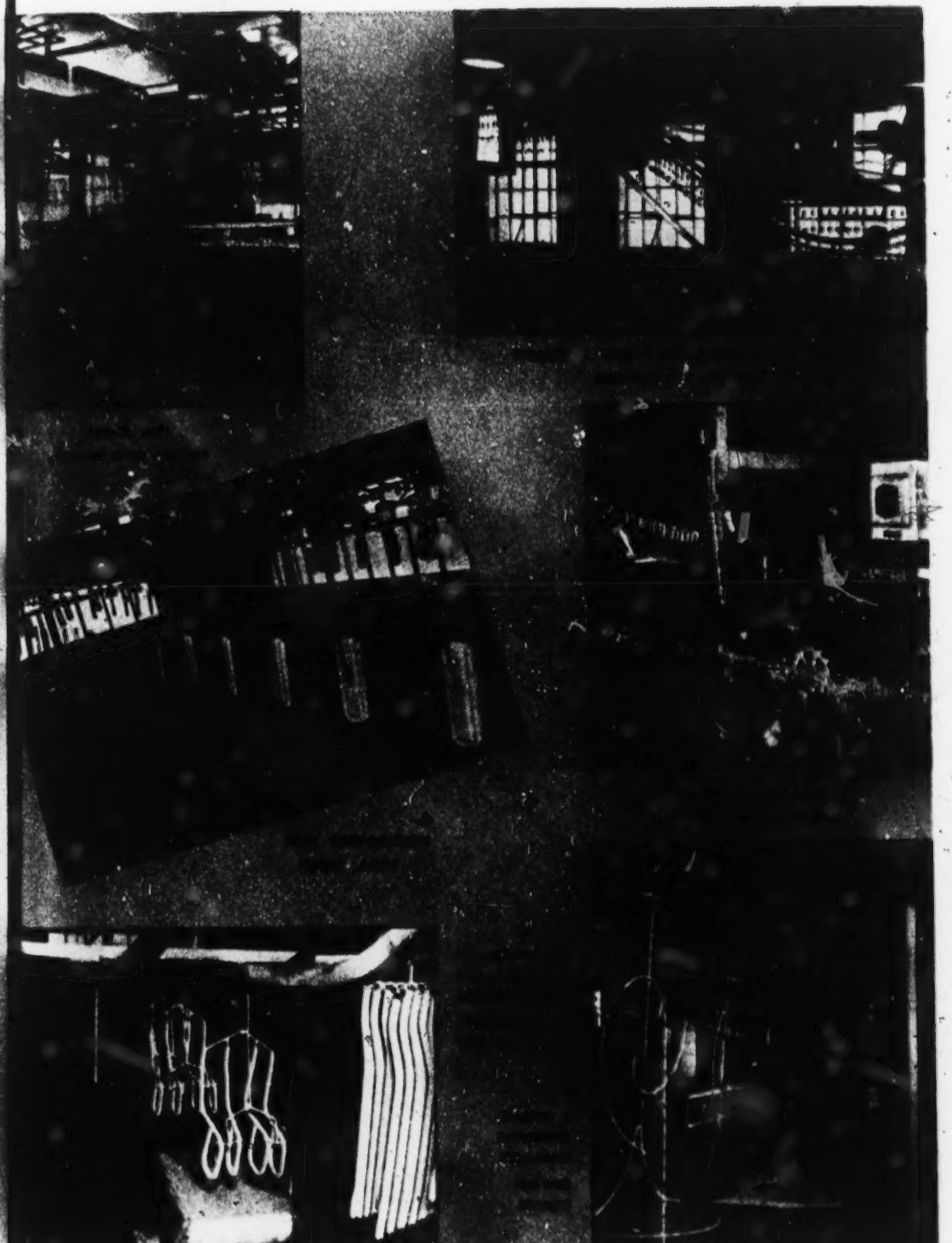

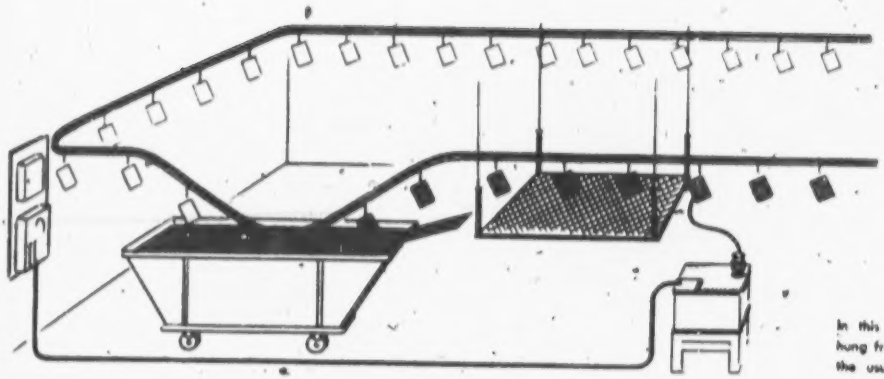

In this process the articles are hung from a conveyor, dipped in the usual manner, then carried over a drainboard, which returns the major part of the excess paint to the tank. After a suitable air-dry period, the articles pass over the electrostatically charged detearing electrode, which exerts an attractive force sufficient to pull off the last drip or tear.

How Electrostatic

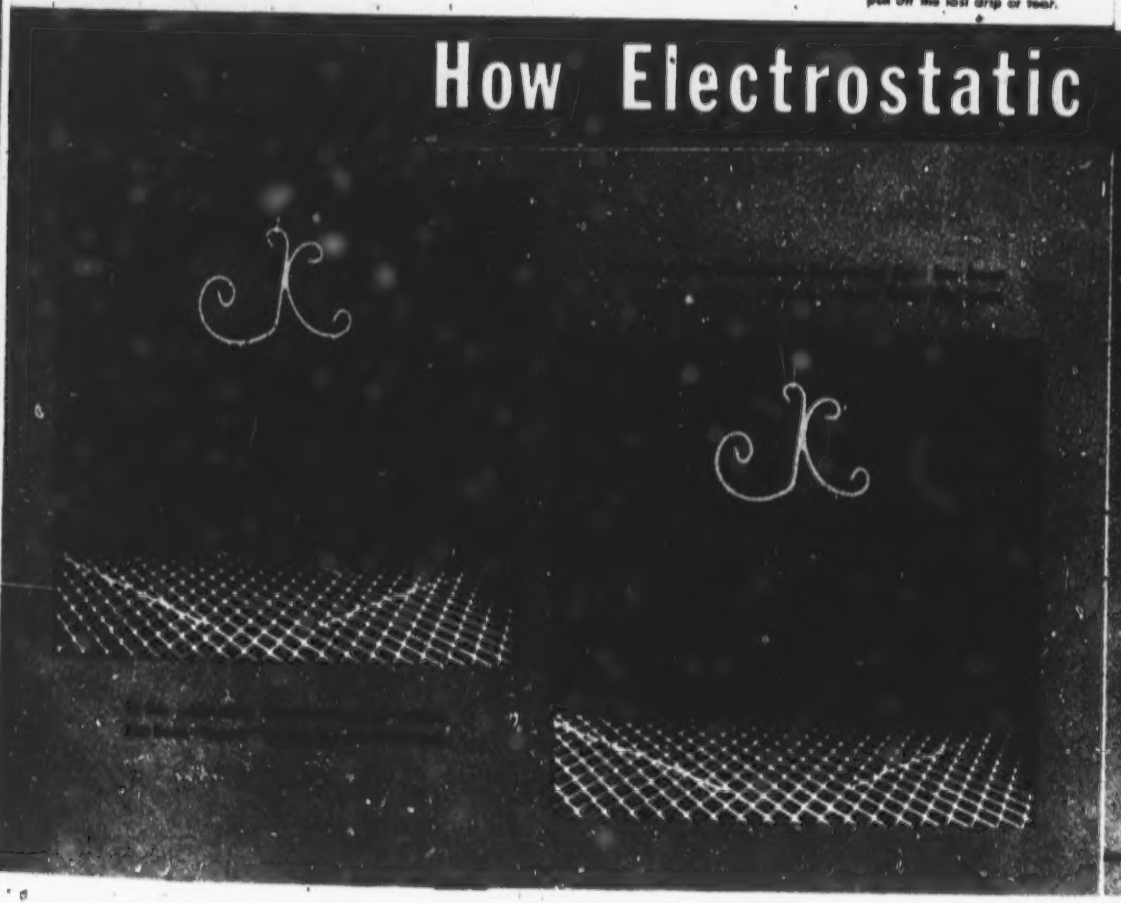

Detearing Works

The Ransburg Electrostatic Detearing Process is based upon the same principle—electrical attraction of opposite charges (+ and − polarity)—as the Ransburg Spray Process. The action, however, is in the reverse direction, in that this process automatically *removes* the excess coating or fatty edges at drain-off points as the coated article is passed adjacent to an electrostatically charged grid or plate.

The Ransburg Electrostatic Detearing Process is employed when the coating material is applied by the dip or flo-coat method, which causes accumulation of excess material at the drain-off points. The dipped article is carried over a drain board; and when it has finished draining and "tears" or fatty edges remain, it is passed over or between the Ransburg grids of expanded metal, which are maintained at high electrical potential by the special Ransburg equipment. The resultant attraction effectively removes this excess material—in fact, quality equivalent to spray coating can be achieved in many cases.

The time allowed for drain between the dip operation and the electrostatic detearing grid depends upon the shape and size of the articles, the flowing characteristics of the paint, and the evaporation rate of its solvents. Usually, this falls within a time range of 1 to 3 minutes.

Normally, the articles must be subjected to the detearing action for 15 to 30 seconds. Superior results are obtained when the drain-off point is ¼" or less in radius and can be exposed to the electrostatic forces of the detearing grid.

The process is especially desirable where a smooth appearance is desired, or to minimize soft paint films, wrinkles, or chipping from excessively coated edges.

Improved quality is only one of the advantages gained with electrostatic detearing. Complicated work holders which are slow to load sometimes can be abandoned. There is no necessity to conceal the remaining tear or fatty edge when you can remove it with electrostatic detearing.

Faster work cycles often result. In addition, one coat often replaces two when electrostatic detearing is employed. Paints of lower viscosity with faster evaporating solvent can often be used to improve one-coat hiding.

How Ransburg Works With You

■ Each application is individually engineered. Details are worked out in the Ransburg laboratory in test runs simulating actual production conditions, which you are invited to witness. Here are the various steps and services:

SURVEY: Ransburg engineers collaborate with you in analyzing the possible advantages through your use of our electrostatic coating processes in your plant. Of initial interest is type of item or items to be coated; production volume desired; type of coating material, and any special problems. When this preliminary analysis warrants a more thorough survey, we will recommend that samples of your products be sent to Indianapolis.

LABORATORY TESTS: Your product is then test-coated in the Ransburg completely equipped laboratory—using your coating materials. Different types of conveyors and other equipment are available so that your production conditions may be closely simulated. You and your associates are invited to witness these tests and to discuss your specific coating operation with our experienced engineers. Ransburg engineers not only are trained in electrostatics, but have broad, practical back-

grounds in general production operations, methods, plant layout, industrial painting, and its allied operations.

RECOMMENDATIONS: Drawings are prepared to show exactly how the process may be incorporated in your production line and specific recommendations submitted for your approval and decisions.

Obviously, all of the above steps are without obligation to you.

PRE-INSTALLATION ENGINEERING: After your acceptance, the plans are re-checked and explicit instructions, diagrams and detailed installation data are furnished you.

INSTALLATION: Ransburg engineers supervise the installation of our electrostatic equipment . . . and thoroughly train your operator in its use.

SERVICE: Ransburg supplies replacement parts for the electrical equipment and engineers are always available to consult with you on your painting problems.

You can evaluate for yourself the inherent advantages of our processes when you see your products coated in our engineering laboratories.

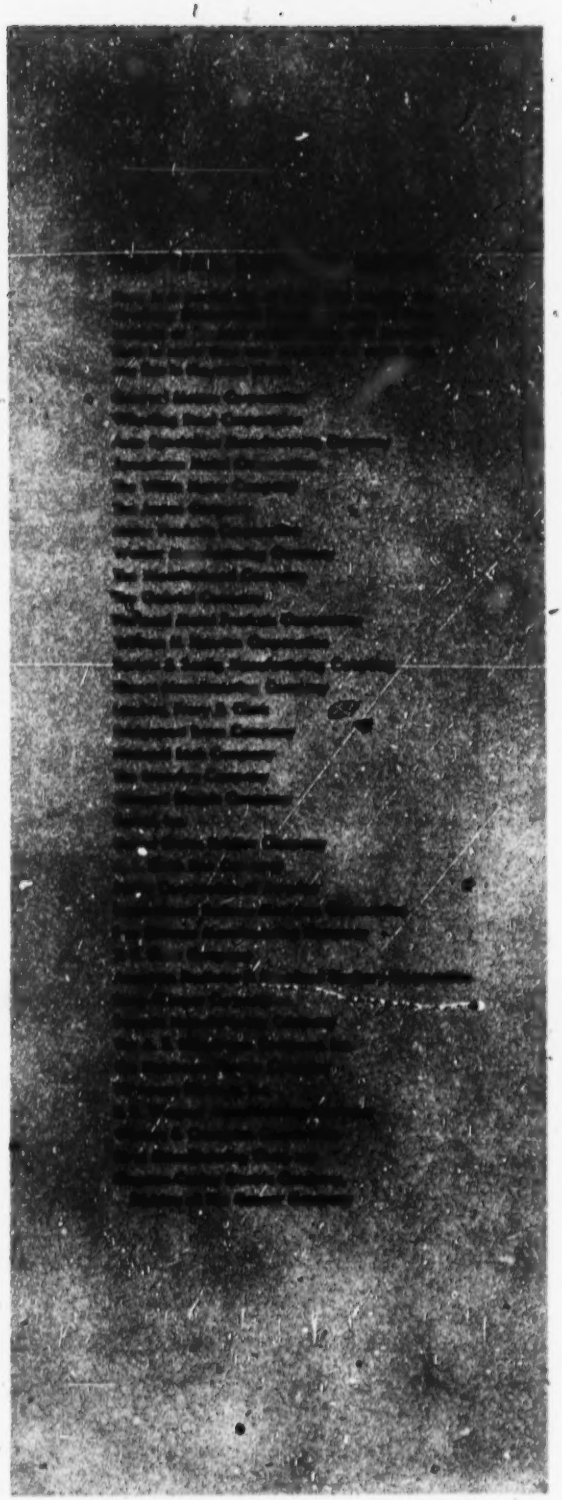

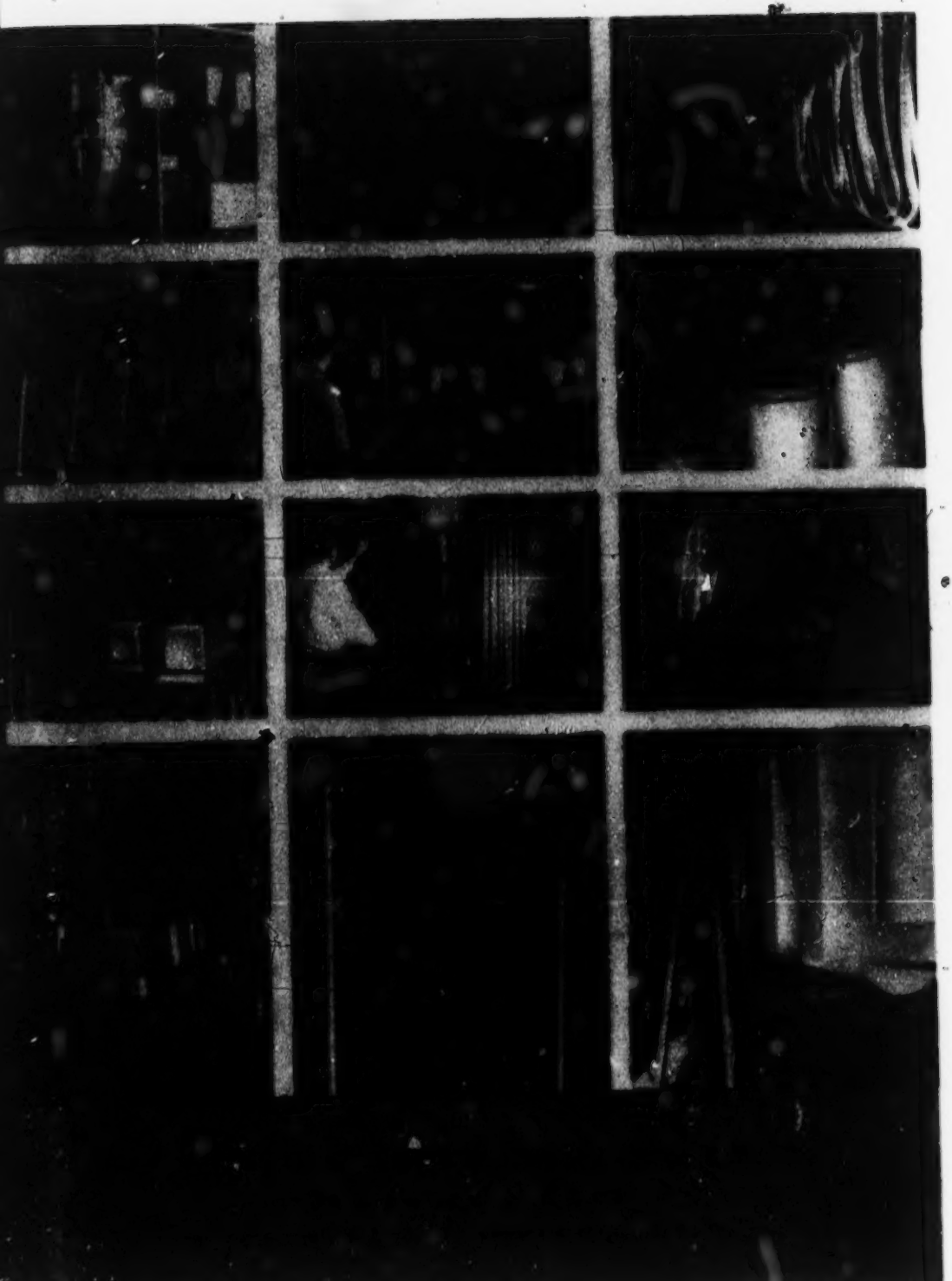

PLAINTIFF'S EXHIBIT NO. IIII.

Ransburg No. 2 Electrostatic Process.

An Amazing Development in Spray Painting.

The Scope of the No. 2 Process.

Type of Article

This process can be used profitably to coat the exterior surfaces of metallic (magnetic or non-magnetic) items where production volume justifies consideration of conveyorized finishing operation. Many items made of non-metallic materials also can be coated.

Type of Materials

Most coating materials which can be readily atomized can be applied by this method. Enamels, lacquers, and varnishes, whether conducting or non-conducting, are handled satisfactorily. Wrinkles offer no special problem.

Type of Conveyor

Any kind of conveyor—monorail, spindle, cross-bar or belt-type—can be used.

Production Rate

The No. 2 Process is capable of handling any reasonable production rate.

Power Requirements

The system normally operates from a 220 volt, 60 cycle, single phase supply. Where this type of supply is not available, special equipment can be furnished.

Ventilation Requirements

Since there is no paint overspray to be exhausted, a relatively small positive air movement for the removal of solvent vapors is all that is required.

Maintenance

Clean-up maintenance is substantially reduced. Mechanical maintenance is proving to be equally negligible because of the very high quality incorporated into the design of the equipment.

Equipment

Ransburg supplies the complete automatic coating unit, consisting of the source of electrostatic potential, electrical controls, insulators, atomizing heads, and coating material handling system. All that the user need to furnish is the conveyor, workholders, and solvent ventilation means. Drawings of the proposed set-up are included in our Engineering Service.

PLAINTIFF'S EXHIBIT PPPP.

Behr-Manning Corporation, Troy, New York.
Executive Offices.

November 22, 1940.

Mr. Harper J. Ransburg,
Harper J. Ransburg Company,
Indianapolis, Indiana.

Dear Mr. Ransburg:

From several sources, it has come to our attention that your comany has been interested in developing an electrostatic method for depositing paint in a finely divided or suspended particle form on irregularly shaped objects.

For many years, Behr-Manning has been employing the electrostatic method to deposit finely divided material of all types and I am writing to you because of our apparent interest in the same development.

We have been manufacturing sandpaper made by the electrostatic process since 1926 and our development work of course preceded this date. From the propulsion of abrasive particles, we moved into new fields involving the deposition of finely divided or suspended particles and during the past few years, we have successfully developed electrocoated pile fabrics for use as automobile upholstery, dress material, etc. Many of our operations have been covered by patents some of which you probably may have seen and many patent applications are pending. We have been interested in the field in which you apparently are working and have done developmental work, namely, the electrodeposition of paint or other liquids and some of our patent coverage is directed to this art.

It has occurred to use that it would not be amiss to arrange for a meeting either in Indianapolis or Troy at the convenience of both parties to discuss our individual interests and positions in the electrostatic deposition field. We will be glad to have representatives visit you in Indianapolis on a mutually satisfactory date or we will be pleased to see you here if you prefer. Will you kindly let us have your reaction to our proposal.

Yours very truly,

Behr-Manning Corporation,
Elmer C. Schacht,
Vice President.

E. C. Schacht
HAH

Behr-Manning Corporation

Division of Norton Company

Abrasive Paper and Cloth Oilstones Abrasive Specialties

Troy, New York,

March 21, 1941.

Mr. Harper J. Ransburg,
Harper J. Ransburg Company,
Indianapolis, Indiana.

Dear Mr. Ransburg:

Our reply to your letter of March 4 has been delayed because of my absence from Troy while on a short vacation

Since our meeting in Chicago and your visit to Troy, we have become increasingly busy and are setting new production records monthly. Under these circumstances, it is difficult for Dr. Oglesby and myself to get away from Troy at the same time. Because of this condition, it occurred to me that we might save time by having the patent conference at which I do not have to be present at one time and then hold what might be called a business session which I would like to attend at a subsequent date. With this in mind, it further occurred to us that your Indianapolis patent attorney might make occasional visits to Washington where our counsel, Mr. John J. Darby, is located. Dr. Oglesby visits Mr. Darby at regular intervals and he could time his visit to Washington so that he was there when your Indianapolis attorney was also in Washington.

The patent attorneys could spend a day in a conference solely devoted to patent matters and to the appraisal of our respective patent positions. Their recommendations

could be reported back to their respective clients and then you and I could decide as to future meetings for business discussions. There is always a possibility that no meetings would be required.

What is your reaction to this proposal? If it is favorable, please let me know and kindly arrange to give us as much notice as possible in advance of the date when your attorney will be in Washington prepared for the conference described above.

With best wishes,

Yours very truly,
Behr-Manning Corporation,
Elmer C. Schacht,
Vice President.

E. C. Schacht
HAH

Behr-Manning Corporation

Division of Norton Company

Abrasive Paper and Cloth Oilstones Abrasive Specialties
Troy, New York,

May 20, 1941.

Mr. Harper J. Ransburg,
Harper J. Ransburg Company,
Indianapolis, Indiana.

Dear Mr. Ransburg:

We have just received a letter dated May 15 from Mr. W. L. McKnight, President of Minnesota Mining & Mfg. Company which contains the following statement:

"I have a very strong feeling that it is unwise to disclose these pending patent applications, particularly where

there may be a conflict of interests and my natural inclination in this matter is that it would be a mistake to make these disclosures."

This quotation refers, as I have previously explained, particularly to the Smyser reissue application and to one or two other pending electrostatic applications which the Minnesota Company is solely prosecuting but over which Behr-Manning will eventually exercise control due to acquisition by assignment.

The above decision would appear to operate to terminate our negotiations for the time being since you have indicated very naturally that you would not care to make complete disclosures of your pending patent material unless we were both willing and prepared to do likewise. Under the circumstances, we would propose that we hold the entire matter in abeyance and review the situation at the end of a 90-day period. If this arrangement is agreeable to you, you may expect to hear from us again in 90 days. With best wishes.

Yours very truly,
Behr-Manning Corporation.

July 3, 1944

Dictated July 1st.

Mr. E. C. Schacht
Behr-Manning Corporation
Troy, New York

Dear Mr. Schacht:

It has been some time since our friendly discussions were terminated by your letter of May 20, 1941. We are wondering, if within this lapse of time, your conditions might have altered sufficiently to warrant our reopening these discussions.

Our work has progressed considerably and we are now preparing to launch an increasingly aggressive operation in the application of various coating materials to manufactured articles in the industrial finishing field. You may or may not have heard that some of the preliminary installations we have made have proven highly successful and are attracting some worthwhile attention.

I know that you will be interested to learn that our patent position has been improved by the issuance of five patents to us, and the acquisition of the Pugh patent. We have also been fortunate in effecting some very constructive improvements on which we have applied for additional patents.

Notwithstanding the wide separation of the fields in which we have been operating, it is easily possible that certain aspects of our patent protection might well overlap, particularly in view of the present Pugh status.

It seems that we mutually can expect every advantage from resuming the discussion to some mutually satisfactory conclusion so that each of us may aggressively pursue our endeavors without concern. In addition to the practical advantages we see in renewing the discussions, it would be a pleasure to see you again. Your reaction and comments on the above would be appreciated.

Yours very truly,

Harper J. Ransburg Co.

By

HPR:rm

August 8, 1944

Mr. E. C. Schacht
Behr-Manning Corporation
Troy, New York

Dear Mr. Schacht:

In harmony with your request we are enclosing copies of our issued patents, pertinent to our discussions, Nos.—

1,855,869
2,247,963
2,270,341
2,334,648

We would like to point out that the claims in our patent No. 2,334,648 are of considerably greater significance than one not well versed in our particular field could possibly appreciate.

Patent No. 2,270,341 is the one to which we referred as possibly interesting to you in the abrasive or pileous fabric field, or at least one in which you could contribute materially in the composition cork industry or the fireproof insulating single industry.

We have fourteen applications pending on electrostatic processes, some of which we feel will have a greater significance than some of the enclosed, one of which we believe to be a decided improvement over Meston.

We are looking forward to exploring these possibilities with you in the near future.

Yours very truly,
Harper J. Ransburg Co.
By

HJR/IK

(Form of Western Union Telegram.)

Aug 10 AM 2 51

CB48 NL=Leland 9

Harper J Ransburg Co=
Indpls=

Cursory Review Of Smyzer Indicates That Of 59 Claims Only Claim 51 And Possible 16 And 58 Are Pertinent But Of Doubtful Validity As Reissued With About Three Years To Run Stop From Nuisance Angle Suggest Negotiating Exclusive License Limited To Your Field Or At Least Non Exclusive License=

Ralph G Lockwood

Smyzer 59 51 16 58

November 13, 1944

Behr-Manning Corporation
Troy, New York

Attention—Mr. E. C. Schacht

Dear Mr. Schacht:

Had anyone told me we would be so long writing after receipt of your letter of October 30 I would not have believed them. The almost continual absence from the city of one or more of us and a very heavy schedule here has prevented our getting together.

Our greatest concern and that to which we have given the most thought and consideration was the question of just how to word our future license agreements so that there could be no question in the minds of our users that they were restricted from operating in your fields, and still not create undue sales resistance for ourselves. It was

originally our thought that this would best be accomplished by adding to our license agreements "said right does not include the use of this process in the manufacture of abrasive articles or articles coated with particles of fibrous material of every kind."

However in reading this from our customers' viewpoint it is conceivable that "fibrous materials" could possibly be interpreted by one who was not present at our meetings to mean particles of any materials in nature which are fibrous in character. This interpretation could bring into this category practically all organic materials or their derivatives and might even be broadly construed to include cellulose lacquers or paints inasmuch as fibrous materials are used in their manufacture. We are certain it was your feeling that this term should have included only those materials which were used in a filament-like shape regardless of their basic or molecular character. We feel it is more in harmony with the thoughts expressed at our meetings, therefore, to base our description of this particular field on the shape of the particles rather than upon their basic nature. We might point out that fiber-shaped particles would include glass fibers and possibly others which normally would not be considered as "fibrous material."

We, therefore, have in mind adding the following, "said right does not include the use of this process on articles used as an abrasive or articles coated with fiber-shaped particles." If you have any contrary views or suggestions for improvement we shall appreciate receiving them.

In view of the above and fostered by our thoughts along this line it occurred to us that the use of the phrase "particles of fibrous material" throughout our agreement could well be misinterpreted by an outsider. We feel therefore that this might be more clearly restated following the same thought.

Accordingly, we have the following changes to suggest

in your draft of the agreement with the thought that they will clarify it and be more in harmony with our meeting of minds in our recent meetings. Several other minor changes are also suggested.

Page 1—last line of your draft

We have changed the word "paint" to read "liquid coatings" because we feel this more aptly describes our field.

Page 2—line 6:

We have changed the phrase "and fibrous coated articles" to read "fields and in the field wherein articles are coated with fiber-shaped particles."

Paragraph (b):

For the above reasons we changed "particles of fibrous material" to read "fiber-shaped particles of material."

Paragraph (c):

Here "said abrasive particles" had no antecedent and this paragraph might not have been interpreted as specifically relating to paragraph (a) and (b) as was obviously intended. Therefore we eliminated "said" and added "used in connection with the fields described in (a) and (b) above."

Page 3—2nd line from bottom:

Here we have added "orientation, separation, grading, or classification" so as to make the grant to us conform to the grant to you.

Page 4—paragraph 3, line 7:

We have changed "cooperative" to "cooperating."

Page 4—3rd line from bottom:

We have changed "an" to "and."

Page 5—line 7:

We have changed the word "wherein" to read "in the event" feeling the new phrase is less ambiguous and more direct than the original single word.

Believing you will agree that these changes better express our meeting of minds, we are enclosing six executed copies for your approval.

We have also made the following corrections in Exhibit A:

United States Patents:

Pugh—1,855,869 (instead of 1,855,859)

Applications:

3rd one listed:

Ransburg, Miller & Curtis—Apparatus for Spray Coating Articles—Ser. No. 516,778—filed Jan. 3, 1944

7th one listed:

Miller—Method and Apparatus for Electrostically Spray Coating Patterns—Ser. No. 540,627—filed June 16, 1944

8th one listed:

Ransburg & Curtis—Coating Apparatus—Ser. No. 542,503—filed June 28, 1944

9th one listed:

Ransburg & Curtis—Method and Apparatus for Coating Hollow Articles—Ser. No. 542,558—filed June 28, 1944

Another point which arises in our minds is that pertaining to our outstanding license agreements which were referred to when you were here but which are not mentioned in the agreement. While we feel it most improbable that

any of our licensees will or can ever use the process which they are licensed to use, in such a way as to invade, even to the slightest extent, any of the fields in which you are operating, we nevertheless feel that there should be complete understanding in respect to such licensees. Our execution of the agreement is, therefore, necessarily upon the assumption that it is subject to these outstanding licenses. In order that you may have full information on the subject and because we feel also that doing so will reassure you as to the improbability of these licensees ever invading your fields, we enclose a list of such licensees and the description of their rights to use the process under their respective agreements. We also have a few proposals outstanding which, if accepted, will fall into the same category.

Our patent applications are being reproduced and will be fowarded to you upon completion.

We, too, are looking forward to a pleasant and harmonious relationship with you through the years. In fact, we enthusiastically feel that we will be of much benefit to each other.

Yours very truly,
Harper J. Ransburg Co.
By .....

HJR/IK

Harper J. Ransburg Co.
Electric Coating Division
1234 Barth Avenue
Indianapolis 1, Indiana

November 13, 1944

Existing Ransburg Spray Coating License Agreements

Butler Manufacturing Co., Galesburg, Ill.

With twelve (12) stationary spray guns for coating metal corrugated roof and wall sheets as per our drawing #130349.

Cheney-Bigelow Wire Works, Springfield, Mass.

Electrostatically spray coating rocket launchers 2.36 M9A1 as per our drawing #130276.

Ferro Enamel Corp., Cleveland, Ohio

To conduct and carry out experiments with the above described equipment in spray coating liquid porcelain enamel.

Florence Stove Co., Gardner, Mass.

For the purpose of spray coating 10½" shell case containers on one monorail conveyor as shown on our drawing #130251.

The Japan Company, Cleveland, Ohio

With four (4) stationary spray guns and two electrode systems, and to be used as specified by First Party for spraying mines and other war items.

Jamestown Steel Partitions Co., Jamestown, New York

For electrostatically detearing dipped fins and electrostatically spray coating the body of 100-Lb. Navy practice bombs on one monorail conveyor as shown on our drawing #130302.

Keeler Brass Company, Grand Rapids, Mich.

To electrostatically spray hardware using two (2) stationary guns in the manner shown on our drawing #130303.

Kingston-Conley Electric Co., No. Plainfield, N. J.

Electrostatically spray coating motor parts and castings on a two-gun setup with one conveyor as per our print #130341.

Landers, Frary & Clark, New Britain, Conn.

For spray coating automobile window mouldings with one (1) stationary spray gun as per our drawing #130282 and experimentally spray coating or dipping and detearing post war production items.

Motor Products Corp., Detroit, Mich.

For spray coating automobile window moundings with a five (5) spray gun unit on one monorail conveyor as shown on our drawing #130271.

Nineteen Hundred Corp., St. Joseph, Mich.

The spray coating of pump and gear case parts for a two (2) spray gun operation as shown on our drawings #130277 and #130278.

Noblit-Sparks Industries, Inc., Columbus, Indiana

For spraying 100-Lb. bombs with four (4) stationary spray guns.

Norris Stamping & Mfg. Co., Los Angeles, Calif.

With the above listed equipment for one paint spray unit as per our drawing #130159 for painting 3" 38 aluminum containers or any other metal products manufactured by Second Party.

Pemco Corporation, Baltimore, Maryland

For test purposes to experiment with and develop the most suitable porcelain enamel compositions for use in these processes.

Rheem Manufacturing Co., Chicago, Ill.
For spraying 100-Lb. bombs with six (6) stationary spray guns as shown in our drawing #130158.

Wheeling Steel Corp., Wheeling, West Va.
For spraying 3 to 6-gallon containers with eight (8) stationary spray guns.

Harper J. Ransburg Co.
Indianapolis

Behr-Manning

November 24, 1944

Mr. Harper J. Ransburg
Harper J. Ransburg Company
Indianapolis, 7, Indiana

Dear Mr. Ransburg:

Enclosed you will find three copies of the electrocoating agreement which have been signed by Behr-Manning in the form in which the agreement was redrafted as outlined in your letter of November 13. We think that the suggested changes were in accord with our verbal discussion and reflect a true meeting of minds.

It is my impression that the copy of the electrocoating agreement which you have executed with your existing licensees or had under negotiations with prospective licensees at the time our agreement was being consummated, contains an indication of the purpose for which the licensed Ransburg equipment is to be employed by the licensee.

If this is the case and since no licenses have to your knowledge been granted in the flock or abrasive fields, we do not foresee difficulty or conflict with any of your existing licensees and it should not be difficult for you to so

limit your future licensees as to prohibit the employment of the patents under which you have given us exclusive rights for abrasives and flock coated articles, in these fields.

We are looking forward to a pleasant and mutually profitable association in this new cross license agreement.

Yours very sincerely,

Behr-Manning Corporation,
E. C. Schacht,
Vice President.

PLAINTIFF'S EXHIBIT NO. TTTT.

A. P. Parts Corporation
1801 Speilbusch Avenue
Toledo, Ohio

April 6, 1955

Attention: Mr. N. J. Osborn

Dear Mr. Osborn:

Subsequent to my last letter to you we have had an opportunity to check the atomization characteristics of the rust inhibiting material which you left with us during your recent visit to the laboratory. Actually, this material handles very poorly with our equipment because of the fact that the solvents in it are so very fast and therefore leave the material almost instantaneously with the break-up of the liquid into the spray. Because of this fact, we do not feel free to recommend our processes to you.

Actually, the nature of this material is such that it is highly inflammable and highly toxic and consequently we do not believe that it could be handled with a spray method without very special precautions.

We do not know what you had specifically in mind for this particular material but trust you will feel free to contact us further if we can help you in this connection.

Very truly yours,

EPM:ab
CC: Darrel E. Creps

Emery P. Miller

PLAINTIFF'S EXHIBIT UUUU.

877

RANSBURG

No. 2 Process

ELECTROSTATIC SPRAY PAINTING

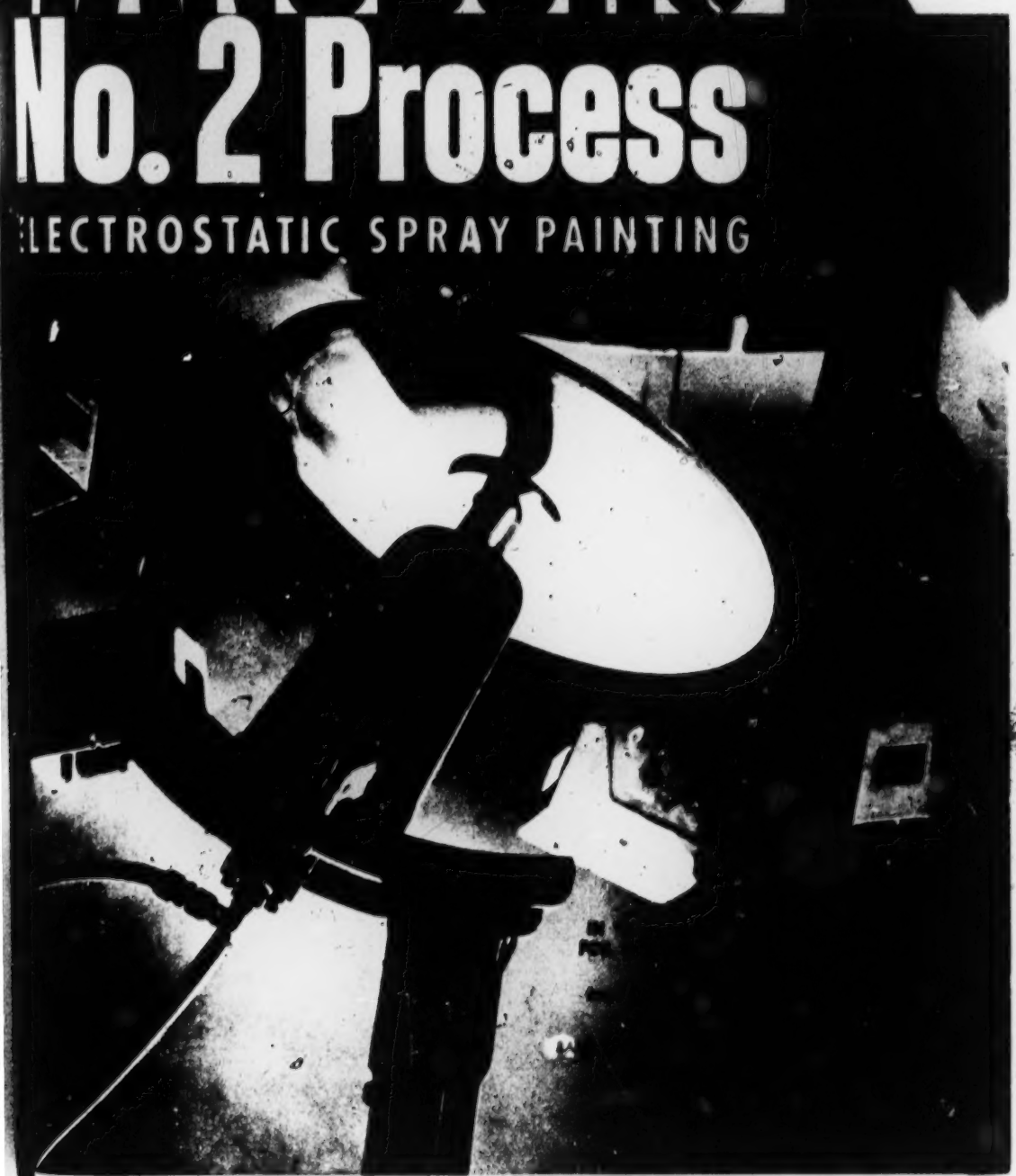

878

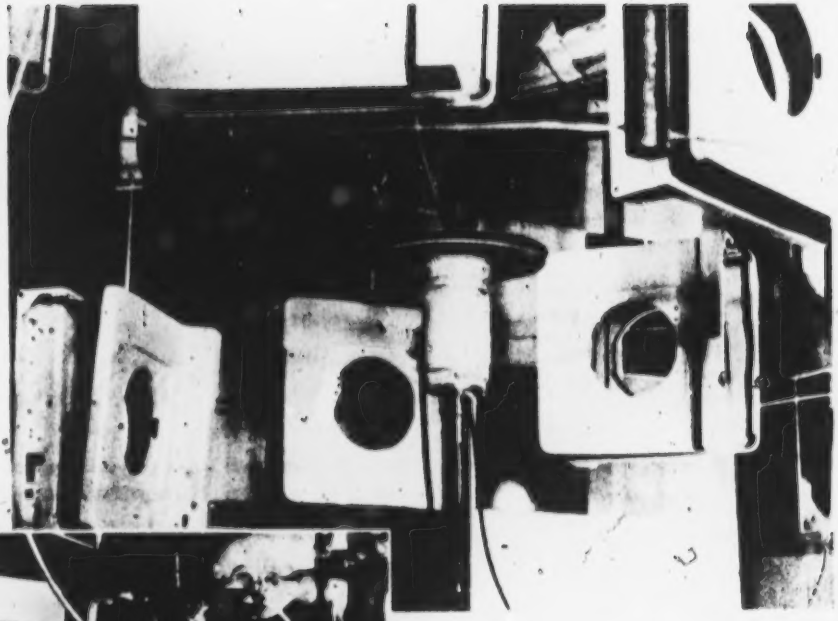

GENERAL ELECTRIC was the first to use Ransburg No. 2 Process for the application of porcelain enamel. GE washer and dryer parts are successfully coated electrostatically on these home laundry production lines at Appliance Park, Louisville. Approximately three times as many parts per gallon of slip are coated electrostatically as would be coated by [illegible]nary air spray. About 97% o[illegible] atomized enamel is depos[illegible] on the ware. Only one electro[illegible]tic operator and three touch-up men are required to process almo[illegible] a million square feet of cover coat a month.

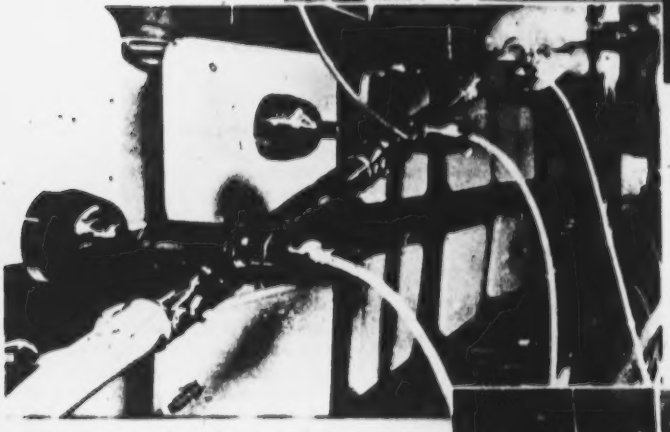

With the Ransburg No. 2 Process, HAMILTON MANUFACTURING CORPORATION, Columbus, Indiana, gets double the paint mileage over hand spray on COSCO metal household furniture. Seven different colors are used, and depending upon daily production demands, 10 to 15 color changes are made daily.

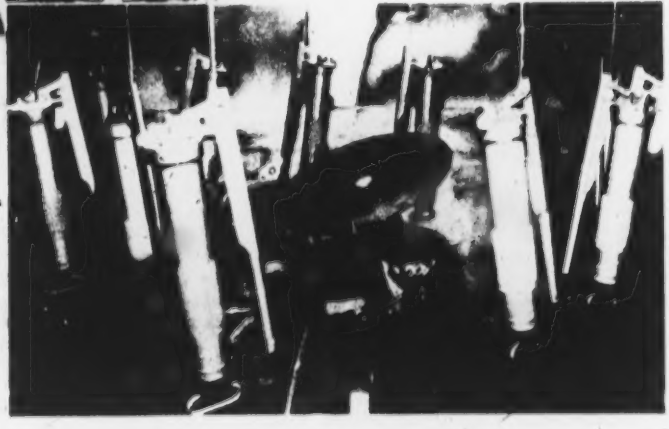

Automatic electrostatic spray stepped up paint mileage 150% over hand spray at LINCOLN ENGINEERING CO., St. Louis, when Ransburg No. 2 Process atomizing disk replaced hand spray in the painting of lubrication lever guns. Where they used to get 100 units per gallon of paint, they now get 250.

o prove the painting of YOUR products with

RANSBURG

Electrostatic Painting Processes

Let us make laboratory tests and prove the advantages and cost-saving benefits of painting YOUR products AUTOMATICALLY with one of the Ransburg Electro-Spray Processes.

GET THE FACTS — IT COSTS YOU NOTHING!

● **First,** Ransburg sales engineers make a survey in your plant to check the possibilities of using Electrostatic Spray Painting on your products. Next, you send samples of your unpainted products—with paint—to the Ransburg laboratories in Indianapolis.

Here, the technical staff takes over. The Ransburg Engineering staff—which includes Ph.D's and Masters in Physics, Science, Electrical, Mechanical and Chemical Engineering—makes a complete study of your job. They also have the "know how" gained from two decades of research in electrostatic painting and years of actual experience in the field. Ransburg, you know, was the pioneer in Electrostatic Spray Painting. Our engineers and technicians have at their disposal every facility for conducting complete tests, simulating your own production conditions. There's a conveyorized lab set-up—22 in all—to handle products ranging in size from automobile bodies and chassis to smallest parts. They'll design workholders, if necessary, and determine exactly how your job can be run to your best advantage.

After preliminary studies and tests, you are invited to Indianapolis to see your job run in the lab. If you wish, photos and even movies of your test run can be made and furnished for your own production people to study. You see first-hand what Ransburg Electrostatic Spray Painting can do for you.

YOU GET PAINT AND LABOR SAVINGS

Paint coverage is accurately measured during the demonstration. The Ransburg No. 2 Process will provide savings up to five times the paint mileage of hand spray. And, one unit can do the work of many hand sprayers. You will see the improved, uniform quality of the work. . . you'll know what kind of increased production to expect, and you can recognize labor savings. ALL OF THIS WITHOUT OBLIGATION.

Ransburg service doesn't end there. After the equipment is installed in your plant—with our supervisory help—we will train your operators, and continue to work with your finishing department. Our technically-trained field service engineers are always available to assist with any of your finishing problems.

Briefly, that's our story. Now it's your move. Call or write.

STEP BY STEP — HERE'S WHAT YOU GET . . .

- Survey of your plant by Ransburg's experienced field engineers, including savings estimate.
- Lab painting demonstration of your products, using equipment closely simulating your own production conditions.
- Accurate measurements of paint film thickness.
- Engineering report of detailed tests to determine paint and labor savings.
- Coated samples of your job, lab production photos, and even movies if desired.
- Detailed drawings of equipment and workholder.

All of the above without obligation to you. And, before equipment is installed you receive detailed, pre-installation instructions. Too, a well-qualified, experienced engineer supervises installation and trains your operator on the job. Ransburg offers continuing laboratory and field service to help you with any of your finishing operations.

880

Scope of the NO. 2 PROCESS

TYPE OF ARTICLE

Almost any metal article, and many non-metallic articles, can be coated by the No. 2 Process. Although ideally suited for coverage of exterior surfaces, this process can coat many recessed areas.

TYPE OF COATING

Most coating materials can be applied. Lacquers, varnishes, and synthetic enamels, whether electrically-conducting or not, can be handled satisfactorily. "Special" formulations are seldom needed.

PRODUCTION RATE

Any reasonable production rate can be met by the No. 2 Process. Conveyorized handling of the work is a prerequisite.

TYPE OF CONVEYOR

Monorail, spindle, cross-bar or belt conveyors can be used.

POWER REQUIRED

Average power required is 2 kw, from a 220 or 440 volt, 60 cycle supply.

VENTILATION REQUIRED

Only a relatively small air movement for removal of solvent vapor is required. Conventional type spray booths are not necessary since there is no overspray paint to be exhausted.

MAINTENANCE

Clean-up and maintenance care is substantially less than other spray methods.

EQUIPMENT

When desired, Ransburg will supply the complete automatic coating unit, consisting of electrostatic voltage source, electrical controls, insulators, atomizers, and coating material supply system. The user furnishes only the conveyor, workholders and solvent ventilation.

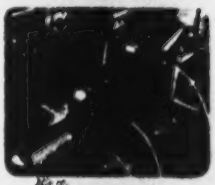

"THE BIG ATTRACTION"

Available upon request—16mm. sound-color, 30 minute film. In story form, explains how No. 2 Process works. Shows production line operation on a wide variety of products. *Write*

RANSBURG ELECTRO-COATING CORP.
Indianapolis 7, Indiana.

PLAINTIFF'S EXHIBIT NO. VVVV.

Formerly at

Now at
P. O. Box 116
Bay Village, Ohio
Phone (Cleveland)
TRinity 1-0062

August 14, 1951

The Cleveland Welding Company
West 117th and Berea Rd.
Cleveland 11, Ohio

Attention: Mr. James Miller

Gentlemen:

Enclosed is a Ransburg Electro-Coating Corp. Brochure which depicts the theory and operating data on five initial installations of an amazing new process for automatic electrostatic spray painting.

This process designated as "No. 2," in contrast to the well known Ransburg Electrostatic spray using conventional spray guns, employs a special type of coating equipment which is furnished completely by the Ransburg Corp. All that the user needs to supply is the conveyor, workholders and ventilating means.

The efficiency of the new development—in many instances exceeds 99%. There is no overspray to be exhausted. The ventilating means is to carry away the thinner vapors.

Complete laboratory facilities at Indianapolis are available, at no obligation to you, to run simulated production on your parts using your own paints or coating materials. Any item whose production volume justifies consideration of a conveyorized operation may be an application.

Simply write or phone for an appointment that suits your convenience.

Very truly yours,
Darrel E. Creps
A Distributor for
Ransburg Electro-Coating Corp.

DEC/s
Encl.—Ransburg No. 2 Brochure

PLAINTIFF'S EXHIBIT WWWW.

July 9, 1951

Aluminum Goods Manufacturing Company
Manitowoc, Wisconsin

Attention: Mr. C. O. McGlynn.

Gentlemen:

It was a pleasure to visit your plant last Thursday, and your courtesy and cooperation in arranging a round-table discussion concerning your painting problems was highly appreciated.

In harmony with our conversation, to aid you in understanding our new electrostatic method I refer you to the drawing I left with you, No. 230202. We have taken the liberty of indicating some of the features of this equipment on the accompanying drawing in red pencil so that we can refer to it in our discussion. In coating these objects, the drawing shows them as being supported from an overhead monorail conveyor which is the best way to run your particular product. However, this is not an essential feature of our method. The object can be supported in any way which is convenient to the remainder of the operation.

This process is primarily a completely automatic, electrostatic operation. Coating material is broken up and precipitated onto the article entirely by the action of electrostatic forces so that no air is involved in the application. Because of the complete absence of air and of the definite attraction of the coating material to the object, the efficiency of this process is quite high. On an object such as we visualize your cartridge tank to be, the efficiency could easily be 95 to 99%. With such efficiency you can readily appreciate the advantages which such a process has over the normal spraying operations. In operation, the cartridge container would be hung from an overhead conveyor or otherwise suitably supported on a hook which is arranged to rotate the object as it is carried past a particular position along the conveyor. At this position along the conveyor, and to one side and spaced from the objects will be placed our new electrostatic atomizers. For your object, we believe that six of our atomizers, as shown on our drawing, will be sufficient.

Coating material from a container is pumped to the atomizing heads by a positive displacement pump which is variable in its speed so that the delivery to the heads is readily adjustable. When this material arrives at the heads it is distributed over the inside surface of the head by virtue of the head being rotated about its own axis. This rotation results in a very thin, uniform film of paint at the front edge of the head. The heads are charged to a high voltage by a voltage peak, the other end of which is grounded as are the articles on the conveyor. The electrostatic field which exists between the heads and the objects as a result of this charging causes the coating material to break up into a fine spray and to move across the intervening space to the objects which collect it as a uniform coating.

Your production of 130,000 cans per month could easily

be handled with our equipment, parts being hung on 9" centers with a speed of 4.5' per minute. Our equipment is not limited by conveyor speed. For example, we have many installations where the conveyor speed is running at a high rate which, of course, is necessary to their production requirements. Therefore, it is readily understandable that the conveyor speed to meet your production needs is quite nominal and would not present any problem in conjunction with our equipment.

We believe that with this explanation and through reference to our drawing, you will have a general understanding of just how our new process operates. It is so efficient that a spray booth in the usual sense of the word is not necessary. A hood should be placed about the equipment, however, to exhaust such vapor fumes as result from the atomization of the coating material. In your particular case the spray booth which you now have could be utilized and a hood would not be necessary.

We supply this equipment and license the use of this new process to you under an initial fee and a monthly license fee. For more specific detail we refer you to our license agreement that was presented to you by the writer. For this initial fee we supply to you the atomizing heads and their supports, the coating material, the pumps and the fluid hoses connecting the atomizing heads with the pumps. We further furnish the high voltage supply, the high voltage conductor for connecting the supply to the atomizer, and the electro-controls for controlling this high voltage equipment. In other words, you would only need to supply the conveyor handling mechanism, the exhaust hood, and the electrical service to which our equipment will be attached.

As discussed with you, the monthly license fee would be based upon the amount of coating material used with our equipment and would be 20% of the cost of the material

used in any particular month; it being understood that there would be a minimum charge of $100.00 per month regardless of usage of the equipment. We always are certain that the use of our equipment much more than compensates our users for the fees which they pay us so that you are certainly able to expect considerable savings over normal processes through its use.

We are prepared here in Indianapolis to demonstrate this process to you and would be most happy to have this opportunity. If it would be possible, we would like to demonstrate it to you on your own cartridge tank or a similar item so that you can actually know before hand the type of finish that you would obtain and understand approximately what mileage efficiency could be obtained with this method. We invite you to consider coming to Indianapolis for this purpose and would be most happy to make any arrangements with you for this end.

Thank you again for the courtesy and hospitality that was extended to me. It was a pleasure to have visited your plant and present this material to you and we are looking forward to a pleasant business relationship. If there are any questions concerning this matter, please do not hesitate to contact the writer at your earliest convenience.

Very truly yours,

Ransburg Electro-Coating Corp.

John E. Maxwell.

JEM:db

P.S. Within the next two or three days we will have completed drawings for your specific job which will show the exact dimensions required for the installation of our equipment in your plant.

PLAINTIFF'S EXHIBIT XXXX

January 18, 1954

Avco Manufacturing Corp.
Appliance and Electronics Division
1329 Arlington Street
Cincinnati, Ohio

Attention: Mr. A. D. Redfield.

Gentlemen:

Pursuant to the discussion between your Messrs. A. D. Redfield and W. Kunz and our Mr. H. E. Downer, enclosed please find four copies of our Electro-Spray Agreement No. 5228. It is understood that this letter is a part of Agreement No. 5228 and amends the agreement as follows:

1. The first "Whereas" clause is rewritten as follows:

"Whereas, Ransburg (a) is the Owner of the United States Letters patent and patent applications set forth in attached Exhibit A, and has the right to grant licenses under the United States Letters patent and patent applications set forth in attached Exhibit B, pertaining to and covering methods and apparatus used in electro-statically depositing liquid spray particles formed by airless atomization (without the use of compressed air), the Process so used being hereinafter referred to as 'said Process' and (b) has acquired much engineering data and experience pertaining to said Process, is conducting research in the field, has performed a substantial amount of engineering in adapting said Process to commercial use, has supplied User with the result of said engineering pertinent to User's products, and has designed special equipment therefor; and"

2. The following sub-paragraph is added to Paragraph 1:-

"It is understood that the unit illustrated in Drawing No. 230803-B is intended specifically for use in coating Washer and Dryer Cabinets, Tops and Doors, and should any changes be required in said unit or ~~should any additional equipment be required for~~ adapting it to coat other articles, Ransburg shall not be under any obligation to supervise such changes or furnish such additional equipment unless both User and Ransburg mutually agree with regard to the allocation of costs for such changes or such additional equipment. It is also understood that the monthly fees specified in Paragraph 10 shall be adjusted in accordance with Ransburg's standard schedule for any changes in the unit or for articles other than Washer and Dryer Cabinets, Tops and Doors."

3. Line 3 of Paragraph 2 is amended as follows:

Change "upon" to—within 30 days after—

4. Line 6 of Paragraph 9 is amended as follows:

Change "six" to—twelve—

5. The second sub-paragraph of Paragraph 9 is rewritten as follows:

"In the event User shall fail to perform any of the conditions or obligations of this agreement, Ransburg may (without prejudice to its rights to recover any amounts owing by User as herein provided, or any damages for breach of this agreement) terminate this agreement, upon giving to User 30 days written notice, and take possession of its equipment without notice and without being liable to any suit, action, indictment, or other proceedings by User or any one claiming under it; however, if User corrects the breach within said 30 days, then this agreement shall continue as though no default had taken place. Any delay, concession or indulgence on the part of Ransburg in enforcing any of its rights in any default shall not be deemed a waiver of such rights."

6. The following sentence is added to the end of the third sub-paragraph of Paragraph 10:

> "Under this sub-paragraph relating to taxes, licenses or fees imposed by any governmental authority, User shall for no calendar year be required to pay or to reimburse Ransburg in an amount in excess of 3% of the replacement value of the equipment furnished under this agreement."

7. The following is added at the end of the second sub-paragraph of Paragraph 12:

> "This agreement shall also inure to the benefit of wholly-owned subsidiaries and successors of User, without, however, relieving User of any of its obligations hereunder, but shall not inure to the benefit of the assigns or legal representatives of User without written consent of Ransburg, which consent shall not, however, be unreasonably withheld."

With regard to Paragraph 3 entitled "Supervision," by this paragraph we undertake to furnish supervision necessary for placing our equipment in readiness for operation in your plant without any additional charges beyond the fees specified in Paragraph 10; however, as explained in the above mentioned discussion, should our supervisor be required to make more than one trip to your plant or be delayed at your plant for any cause not chargeable to us, then we would charge you $75.00 a day and any necessary transportation expenses as result of such additional trip or trips, or such delays. For example, if you would request our supervisor to be present at your plant on February 1st and upon his arrival he would be informed by you that due to delay in the installation of your conveyor you are not ready to have our equipment installed, and you would ask him to return two weeks later, we would require that you pay us $75.00 a day for the time of our supervisor in making the first trip and his transportation expenses in making such trip.

With regard to Paragraph 5, Mr. Redfield pointed out that this paragraph excludes any warranty on our part. Such a warranty would not be feasible in an operation such as this when the operation of the equipment is entirely within the control of the customer. We believe that you have fully convinced yourselves that the equipment and the process can perform satisfactorily, or you would not otherwise contemplate entering into this agreement. Where the equipment is to be operated by the customer, the licensor could not guarantee performance. The experience of many customers who are using our equipment constitutes a much better earnest of performance than any written warranty or guaranty could afford.

As explained to Mr. Redfield, the fees specified in our agreements have been arrived at after careful consideration, and they are the standard fees charged all of our customers for this type of unit. In order to adhere to our policy of treating all of our customers on as nearly an equal basis as possible, we cannot change these fees at the request of any one of our customers.

In respect to waiving our monthly fees during such periods as you might be out of production, it would be impossible for us to agree with all of our customers that during the period in which the equipment and process are not in use no monthly fee would be payable. The possibility that there may be periods of time when the equipment is not in use is taken into consideration in arriving at the minimum monthly fee and it is made smaller by consequence of such consideration. If we were to undertake to make exception for the period of time during which our process and equipment are not used by charging proportionately more during periods of use, both the customer and we would come out about the same, but it would require much more bookkeeping and a much more intricate agreement. We believe that you will, upon reflection, agree with us in this matter.

With regard to the future inventions paragraph, we have established a policy of not deviating from this paragraph since it would be unfair to our many customers who have already signed agreements with such provision. Since our company developed the basic method and apparatus which is licensed under this agreement, we feel that it is equitable and fair to ask our customers to give us a non-exclusive license under any improvements which they may make while they are using our basic method and apparatus. By this paragraph, both our customers and ourselves may be protected in using most of the future improvements that will be made on this method and apparatus, since all of our customers of the No. 2 Process have signed an agreement that incorporates a future inventions paragraph.

We trust that the above amendments and explanations will satisfy you and that you will feel that you can now recommend signing the agreement. Upon signing all four copies of the enclosed agreement and this letter and returning all copies of the agreement to us, we will be able to sign the agreement and return two signed copies to you, after which, we will be able to go forward with plans for your electrostatic unit.

Very truly yours,
Harold Ransburg
Harold P. Ransburg, *V. P.*

HPR/HED/be
Encs.

Agreed to this 2nd day of February, 1954.

Avco Manufacturing Corporation
By N. Shaun

This letter was signed by me on behalf of Ransburg Electro-Coating Corp. as Vice President of said Corporation and pursuant to authority vested in me by said Corporation.

Harold Randsburg
Harold P. Randsburg,
V. P.

Exhibit A.

Patent Number	Patent Number	Patent Application Serial Number
2,247,963	2,559,225	626,631
2,270,341	2,567,781	689,116
2,334,648	2,568,611	
2,335,790	2,632,716	
2,417,798	2,636,471	In addition to the above listed applications a substantial number of additional applications are pending. Since there is nothing of public record with respect to many of these applications, we would prefer to furnish a list, or further information with respect thereto, only if you are agreeable to receiving it on a confidential basis.
2,421,787	2,650,329	
2,425,652	2,651,287	
2,428,991	2,655,128	
2,442,986	2,658,009	
2,446,953	2,658,472	
2,463,422	2,662,833	
2,465,128		
2,466,906		
2,486,877		
2,509,276		
2,509,277		
2,509,448		
2,526,763		
2,526,780		
2,531,542		
2,544,806		
2,546,791		
2,550,657		
2,551,035		
2,553,724		

Exhibit B.

Patent Number
2,097,233
2,221,338

Patent Application Serial Number
541,579
662,319
452,632

PLAINTIFF'S EXHIBIT NO. YYYY.

G. A. Chutter
15 Exchange Place
Jersey City 2, N. J.
DElaware 2-1740

Call Report March 11th 1949

General Electric Company
Schenectady, N. Y.

Messrs. Emery Miller, Ed. Radsburg and G. A. Chutter called at the General Electric Company plant at Schenectady on March 9th to talk to Mr. H. L. Erlicher, Vice President in charge of purchasing and Mr. R. R. Rausch, Vice President in charge of manufacturing.

Prepared outline of normal contract in force 3/9/49, and the proposed electrostatic spray blanket agreement for large companies was left in triplicate with Mr. Erlicher and Mr. Sredenschek.

Mr. Erlicher suggested showing the moving picture first and arrangements were made for the projector room in Building 37 for 1.30 P. M. Mr. Erlicher arranged for the following to be present beside himself and his assistant Mr. Sredenschek

Mr. R. R. Rausch, Vice President in charge of Mfg.
Mr. A. T. Chandonnet
Mr. Beardslee
Mr. Charles Whiting, Methods
Mr. A. B. Wellborn
Mr. H. Gordon
Mr. G. E. Collins
Mr. R. Carter
Mr. W. H. Fortington, Methods
Mr. P. W. Sayles

and others whose names did not get listed by the writer. Messrs. Beardslee, Whiting and Fortington seemed very enthusiastic, grasping the significance of the savings to be enjoyed.

The full moving picture was shown after opening remarks by Emery Miller. During the Servel and Studebaker silent pictures, Emery Miller supplied dialogue. After the pictures, Mr. Erlicher suggested a conference in Mr. Sredenschek's office where our proposal was reviewed in detail. Ed. Ransburg went into considerable detail as to the justification of our proposed blanket license, and the reasonableness of the same. Stress was placed on the contribution that Ransburg Electro Coating drive and determination had produced a system that gave industry to day a new, valuable, unique tool capable of savings in excess of $1,000,000 per year to the General Electric Company. The cost of the system to the General Electric Company would be very small, say $50,000 plus alteration costs, or about 5%. Emphasis was placed on the fact that even if the patents were worthless, that we could get the system into profitable operation enough quicker than any other way of handling, that this differential speed was worth the price we were charging, i.e., at $1,000,000 saving per year, 3 month delay would be worth $250,000.

The conference broke up at 4.30 P. M. with the suggestion that they would have to figure what savings could be enjoyed to check our statements. Mr. Beardslee was asked to work out this detail. Mr. Rich of the Patent Department was asked to sit in on this meeting. He seemed to value the spray painting patents lightly, but considered detearing patents good.

I will follow with Schenectady and Eastern plants to keep this boiling. In the meantime, please keep General Electric parts moving as they reach the laboratory.

Erlicher says he saw at Erie, the coating of refrigerator cabinets by "electrostatic or some other process which did not put paint on the floor or walls of the spray booth." Sredenschek suggested that might make an offer but our price looks high. As of to-night, G. A. Chutter suggests standing pat on our price and proposition.

G. A. Chutter

CC: Ransburg Electro-Coating Corp.

PLAINTIFF'S EXHIBIT ZZZZ-1.

Binks Manufacturing Company
3114-40 W. Carroll Avenue, Chicago 12
Van Buren 6-4200

Branch Offices in all Principal Cities

July 3, 1956

Ransburg Electro-Coating Corporation
Barth & Sanders Streets
Indianapolis 7, Indiana

Attention: Mr. Harold P. Ransburg
Vice President

Gentlemen:

We have fully developed and are ready to market a paint sprayer which electrostatically atomizes the paint without making use of air. Since we understand from the trade you have a standard form of patent license, we would appreciate your sending us a copy if your licensed patent is applicable to such a sprayer.

Awaiting your reply, we are

Very truly yours,

John W. Baur,
Chief Engineer, Std. Equipment.

PLAINTIFF'S EXHIBIT *ZZZZ-2.*

Exhibit "B."

Ransburg Electro-Coating Corp.
Ransburg.

Telephone: MElrose 2-7513 Barth and Sanders Streets
Cable address: Ranscoat Indianapolis 7, Indiana

July 12, 1956

Binks Manufacturing Company
3114-40 W. Carroll Avenue
Chicago 12, Illinois

Attention: Mr. John W. Baur,
Chief Engineer, Std. Equipment

Gentlemen:

This is in reply to your letter of July 3 advising that you have developed an electrostatic paint sprayer.

Enclosed are our standard license forms for painting with the type of equipment you mention. We would appreciate an opportunity to get together with you and discuss any questions you may have.

I am leaving the city today, but plan to contact you during the early part of August after my return.

Yours very truly,
Ransburg Electro-Coating Corp.
E. M. Ransburg,

EMR/eh
Encls.

PLAINTIFF'S EXHIBIT ZZZZ-3.

Exhibit "C."

Ransburg.

Electro-Spray Agreement.

No.....

User:

Plant: Units: Drawing No.

Items:

Ransburg-Electro-Coating Corp., of Indianapolis, Indiana (herein called Ransburg), which owns patents and inventions for electrostatically depositing airlessly atomized (without compressed air) liquid spray particles, herein called "the Process," and has done and is doing extensive engineering and research on the Process; and the above User, which desires to use the Process and engineering, agree that:

1. License

During the term and subject to the provisions hereof, Ransburg grants User a non-exclusive license to use the Process at User's plant, with the number of units, in accordance with the drawing made a part hereof (subject to such changes in procedure and specifications as Ransburg may from time to time designate) for coating the items, all as set forth above.

2. Use and Supervision

User will use the Process in accordance with Ransburg's safety and operating recommendations, and will not make any use thereof except as herein provided. Ransburg's duly authorized representatives

shall have the right to enter User's premises during business hours to determine the manner in and extent to which User is using the Process and, to the extent Ransburg deems it desirable, Ransburg may make engineering and or operating recommendations.

3. Fees

User will pay Ransburg at Indianapolis, Indiana: (1) An initial fee of $ within 30 days after the acceptance of this agreement by Ransburg; and (2) For each calendar month during the term hereof a monthly fee (pro-rated for any partial initial calendar month) equal to .

At the request of either party the minimum monthly fee from time to time shall be adjusted commensurate with changes of not less than ten points from the value for January, 1956 of the Consumer Price Index, Large Cities Combined, All Items, of the Bureau of Labor Statistics of the U. S. Department of Labor, on the 1947-1949 base, or any successor thereto.

User will keep and make available for Ransburg's inspection during business hours permanent records of all information required for computing monthly fees. Within 10 days following each calendar month User will furnish to Ransburg a written report containing all information for computing the fee for that month, with User's computation and payment of the fee.

4. Liability

Ransburg shall not be liable to User for damages resulting from the installation, servicing or use of the Process. User indemnifies Ransburg against all claims of others for any damages resulting from the installation, servicing or use of the Process. Ransburg makes no warranty, express or implied, relative to the Process.

5. Term

This agreement shall be in effect from the date of acceptance by Ransburg until terminated as follows: (1) User may terminate as of the end of any calendar month, upon 30 days' written notice to Ransburg; (2) Ransburg may terminate as of any date after three years from the acceptance date hereof, upon six months' written notice to User; or (3) Ransburg may terminate forthwith should User become insolvent or bankrupt or should any breach or default by User remain uncured for 20 days after written notice thereof from Ransburg.

This written agreement constitutes the entire agreement between the parties, and no terms or understandings not herein contained (whether included in any purchase order or otherwise) shall be valid or binding unless contained in a writing signed by both parties. This agreement shall be governed by the law of Indiana.

Signed by User on ..... , 195 .....

Accepted by Ransburg on ..... , 195 .....

(User) Ransburg Electro-Coating Corp.

By ..... By .....

(Title) (Title)

PLAINTIFF'S EXHIBIT *ZZZZ-5.*

Exhibit "D."

Ransburg Electro-Spray Agreement

No.

User:
Plant: Units Drawing No.
Items:

Ransburg Electro-Coating Corp., of Indianapolis, Indiana (herein called Ransburg), which owns patents and inventions for electrostatically depositing airlessly atomized (without compressed air) liquid spray particles herein called "the Process," has done and is doing extensive engineering and research on the Process, and has designed special equipment therefor; and the above User, which desires to use the Process, engineering and equipment, agree that:

1. License

During the term and subject to the provisions hereof, Ransburg grants User a non-exclusive license to use the Process at User's plant, with the number of units, in accordance with Ransburg's drawing made a part hereof (subject to such changes in equipment, procedure, and specifications as Ransburg may from time to time designate) for coating the items, all as set forth above.

2. Equipment and Supervision

At the time requested by User, Ransburg will ship prepaid to the above plant, for use of the Process, high voltage, atomizing liquid supply and electrical control equipment, and will furnish expert supervision for installing and placing it in operation. If Ransburg's

supervisor is required to make more than one trip to User's plant or is there delayed for any reason not chargeable to Ransburg, User will pay Ransburg $75.00 for each day of such extra trip or delay, plus transportation expenses incurred. User shall furnish all other labor, materials and equipment for the installation and use of the Process.

Ransburg will furnish replacements for any defective part of its equipment at the expense of (1) Ransburg, if the part becomes defective through ordinary wear and tear from proper use and if it is returned prepaid within 30 days after becoming defective, or (2) User, at Ransburg's applicable standard replacement charge, if it becomes defective through improper use or negligence of User, or is not returned within said 30 day period.

Ransburg's obligation to furnish equipment, supervision and replacement parts is subject to availability of the equipment and parts, to prior commitments, fires, strikes, acts of God, governmental decrees or actions, and any other causes beyond Ransburg's control, postponing or preventing performance.

3. Fees

User will pay Ransburg at Indianapolis, Indiana: (1) An initial fee of $ sixty days after shipment of Ransburg's equipment to User, or 30 days after its installation, whichever period expires earlier; and (2) For each calendar month during the term hereof, commencing upon completion of installation of the equipment or on the thirtieth day following shipment thereof, whichever occurs earlier, a monthly fee (pro-rated for any partial initial calendar month) equal to

At the request of either party the minimum monthly fee from time to time shall be adjusted commensurate with changes of not less than ten points from the value for January, 1956 of the Consumer Price Index, Large Cities Combined, All Items, of the Bureau of Labor Statistics of the U. S. Department of Labor, on the 1947-1949 base, or any successor thereto.

User will keep and make available for Ransburg's inspection during business hours permanent records of all information required for computing monthly fees. Within 10 days following each calendar month User will furnish to Ransburg a written report containing all information for computing the fee for that month, with User's computation and payment of the fee.

If shipment of the equipment is requested by User more than one year after Ransburg's acceptance of this agreement, Ransburg shall have the right to change the fees and terms of this agreement in conformity with its policy at that time.

4. Title and Use of Equipment

All equipment furnished by Ransburg shall remain its personal property and in User's possession until returned to Ransburg as herein provided. User will pay Ransburg for any loss of, or damage to, Ransburg's equipment while in the possession of User or its agents and upon termination of this agreement will at its expense promptly deliver the equipment, freight prepaid, to Ransburg at Indianapolis, Indiana, in as good condition as when received, except for ordinary wear and tear from proper use.

User will pay, or reimburse Ransburg for, any taxes or fees imposed by any governmental authority by

reason of the installation, possession, use, or location of any equipment or services furnished by Ransburg hereunder.

User will use the equipment and the Process in accordance with Ransburg's safety and operating recommendations, and will not make any use thereof except as herein provided. Ransburg shall have the right to enter User's premises during business hours to inspect the condition and use of the equipment.

5. Liability

Ransburg shall not be liable to User for damages resulting from the installation, servicing, presence, use or condition of Ransburg's equipment at User's plant. User indemnifies Ransburg against all claims of others for any damages resulting from the installation, servicing, presence, use, or condition of Ransburg's equipment at User's plant. Ransburg makes no warranty, express or implied, relative to the Process or equipment.

6. Term

This agreement shall be in effect from the date of acceptance by Ransburg until terminated as follows: (1) User may terminate as of the end of any calendar month or as of the date of return of Ransburg's equipment, whichever is later, upon 30 days' written notice to Ransburg; (2) Ransburg may terminate as of any date after three years from the acceptance date hereof, upon six months' written notice to User; or (3) Ransburg may terminate forthwith should User become insolvent or bankrupt or should any breach or default by User remain uncured for 20 days after written notice thereof from Ransburg, and in any such case Ransburg may enter User's premises and repos-

sess its equipment without it or its authorized representatives incurring any liability for trespass or other causes and without prejudice to its rights to recover amounts owing it hereunder or damages for breach of this agreement.

This written agreement constitutes the entire agreement between the parties, and no terms or understandings not herein contained (whether included in any purchase order or otherwise) shall be valid or binding unless contained in a writing signed by both parties. This agreement shall be governed by the law of Indiana.

Signed by User on (, 195

Accepted by Ransburg on , 195

(User) Ransburg Electro-Coating Corp.

By By

(Title) (Title)

PLAINTIFF'S EXHIBIT *ZZZZ-7.*

Binks Manufacturing Company
3114-40 W. Carroll Avenue, Chicago 12
VAn Buren 6-4200
Branch Offices In All Principal Cities.

July 25, 1956

Ransburg Electro-Coating Corporation
Barth & Sanders Streets
Indianapolis 7, Indiana

Attention: Mr. E. M. Ransburg

Gentlemen:

We acknowledge receipt of your letter of July 12, 1956 together with your standard license forms which you say cover a paint sprayer of the type we propose to market as noted in our letter of July 3, 1956.

We also note that you plan to return the early part of August and will get in touch with us.

In order to facilitate your consideration of the matter, we are enclosing our Print No. SK-661 dated 5-12-54 which illustrates the airless type of paint sprayer we have developed for electrostatically atomizing the paint.

We understand that you have used the form of license, like those you submitted to us, in licensing the trade under your Starkey Patent No. 2,685,536, but this form of license would not be satisfactory to us as a manufacturer of spray equipment.

Possibly, you may have some other form of license under the Starkey patent that would be acceptable to us.

Awaiting further word from you upon your return, we are

Very truly yours,
John W. Baur,
Chief Engineer, Std. Equipment.

Enclosure-1

PLAINTIFF'S EXHIBIT ZZZZ-8

PLAINTIFF'S EXHIBIT ZZZZ-9.

Exhibit "F".

Ransburg Electro-Coating Corp.
Ransburg

Telephone: MElrose 2-7513 Barth and Sanders Streets
Cable address: Ranscoat Indianapolis 7, Indiana

August 16, 1956

Binks Manufacturing Company,
3114-40 W. Carroll Avenue,
Chicago 12, Illinois.

Attention: Mr. John W. Baur,
Chief Engineer, Std. Equipment

Gentlemen:

Please accept my apologies for not replying earlier to your letter of July 25th, but several pressing matters have occasioned this delay after my return to Indianapolis.

We note that you advise that license forms Nos. 439 and 440 are not satisfactory. We will appreciate it if you will advise us what you have in mind.

Very truly yours,
Ransburg Electro-Coating Corp.,
E. M. Ransburg.

EMR/jp

PLAINTIFF'S EXHIBIT ZZZZ-10.

Binks Manufacturing Company
3114-40 W. Carroll Avenue, Chicago 12
VAn Buren 6-4200

Branch Offices In All Principal Cities.

August 22, 1956

Ransburg Electro-Coating Corporation
Barth & Sanders Streets
Indianapolis 7, Indiana

Attention: Mr. E. M. Ransburg

Dear Mr. Ransburg:

In response to your letter of August 16, 1956, we desire to advise you that we primarily interested in the manufacture of spray equipment for electrostatically spraying atomized paint without the use of compressed air. While in your letter of July 12, 1956 you state your licenses cover painting with this type of equipment, the submitted licenses, however, are not for the manufacture and sale of the actual spray equipment, but rather for the use of leased equipment.

What we are interested in is a license to make and sell equipment for this type of spray painting under your Starkey patent and the terms on which such a license would be available.

Awaiting your further advices in the matter, we are

Very truly yours

John W. Baur,
Chief Engineer, Std. Equipment.

PLAINTIFF'S EXHIBIT ZZZZ-11.

Exhibit "G."

Ransburg Electro-Coating Corp.
Ransburg

Telephone: MElrose 2-7513 Barth and Sanders Streets
Cable address: Ranscoat Indianapolis 7, Indiana

August 31, 1956

Binks Manufacturing Company
3114-40 W. Carroll Avenue
Chicago 12, Illinois

Attention: Mr. John W. Baur
Chief Engineer, Std. Equipment

Gentlemen:

In response to your letter of August 22 we wish to point out that our form No. 440 sent you with our letter of July 12 is not for the lease of equipment but rather is a license to use our process without reference to equipment.

It is a form for our granting a license directly to the user of the process because it enables us to establish fees on the basis of the requirements of the painting operation and the value of the coating material used.

Under certain circumstances this license form could possibly be modified and if you have some suggestions in that direction or any other proposals to make we shall appreciate receiving them.

Very truly yours,
Ransburg Electro-Coating Corp.,
E. M. Ransburg,
Vice President.

EMR:dh

PLAINTIFF'S EXHIBIT ZZZZ-12.

Binks Manufacturing Company
3114-40 W. Carroll Avenue, Chicago 12
VAn Buren 6-4200

Branch Offices In All Principal Cities.

September 12, 1956

Ransburg Electro-Coating Corporation
Barth & Sanders Streets
Indianapolis 7, Indiana

Attention: Mr. E. M. Ransburg

Dear Mr. Ransburg:

As we indicated to you in our previous letter of August 22, 1956, your submitted license form No. 440 is not acceptable to us. One reason for this is that it requires continuous periodic payments of royalties based on the extent of the coating material used by the equipment.

Our sales practice is such that any license agreements that we might enter into would have to require the payment of only one royalty at the time of each sale so that thereafter the customer's use of the equipment would be free of any further royalty payments.

In your letter you say that under certain circumstances your license can be modified and you ask us for our suggestions in that regard. Accordingly, would you consider granting a license requiring, in the instance of each sale of spray equipment, only a single royalty payment at a given rate of percentage of the sales price? If so, kindly advise us as to your terms for such a license.

Very truly yours,

John W. Baur,
Chief Engineer, Std. Equipment.

PLAINTIFF'S EXHIBIT ZZZZ-13.

Exhibit "H".

Ransburg Electro-Coating Corp.
Ransburg

Telephone: MElrose 2-7543
Cable address: Ranscoat Indianapolis 7, Indiana

September 21, 1956

Binks Manufacturing Company
3114-40 W. Carroll Avenue
Chicago 12, Illinois

Attention: Mr. John W. Baur
Chief Engineer, Std. Equipment

Gentlemen:

This is in reply to your letter of September 12 advising that our method of charging in relation to the use of the process is unacceptable to you and asking if we would consider granting a license in which the royalty is based solely on the sales price of the equipment. Granting licenses on this basis would require a complete change in our marketing policy and a change of all of our licenses now in effect, as otherwise a large part of our licensees would be treated unfairly. We also believe that the system you suggest is not satisfactory for determining the proper value for the use of the process.

In view of the foregoing we trust you can readily understand why we feel that we cannot comply with your request. We want you to know that licenses are available to your customers for painting with our method and we assume

you will not furnish the equipment which has been the subject of this correspondence to such customers unless they are licensed by us.

Very truly yours,

Ransburg Electro-Coating Corp.,

E. M. Ransburg,

EMR:dh *Vice President.*

PLAINTIFF'S EXHIBIT AAAAA.

December 11, 1956

Allegheny Ludlum Steel Corp.
2020 Oliver Building
Pittsburgh 22, Pennsylvania

Attn: Mr. A. B. Wadsworth
Asst. Purchasing Agent

Gentlemen:

This letter is pursuant to our recent telephone conversations with Mr. Wadsworth and Mr. Ely regarding Ransburg Electro-Spray agreement No. 6482 which we have proposed for Allegheny Ludlum Steel Corp. We are agreeable to amending agreement No. 6482 as follows:

A. The equipment supplied by Ransburg under agreement No. 6482 will be installed in Allegheny Ludlum's plant on an initial one year's trial basis, the year to commence with the date of installation of the equipment. During the one year trial period, the monthly fees shall be a flat $175.00 per month. If, prior to the end of this one year trial period, Allegheny Ludlum notifies Ransburg in writing that they are not satisfied with the installation and therefore terminate the agreement, Ransburg will refund to Allegheny Ludlum

one-half of all initial and monthly fees paid by Allegheny Ludlum under agreement No. 6482.

B. If during the aforesaid one year trial period, Allegheny Ludlum notifies Ransburg in writing that they are not satisfied with the original installation and that Allegheny Ludlum then desires to use the Ransburg No. 1 Process of electrostatic spray coating (using compressed air spray guns), Ransburg will ship to Allegheny Ludlum's plant, and supervise its installation, equipment for using the Ransburg No. 1 Process at no additional charge to Allegheny Ludlum, except that Allegheny Ludlum will furnish the necessary spray guns, air controls, etc. which are normally supplied by a user of the Ransburg No. 1 Process. Allegheny Ludlum will also return to Ransburg all items of the original installation not required for the subsequent No. 1 Process installation. The No. 1 Process installation provided herein shall be on the same one year's trial basis as set forth in A. above.

C. Should Ransburg exercise its right of termination under paragraph 6 (2) during the fourth year of the agreement, Ransburg will refund one-third of the initial fee paid by Allegheny Ludlum under this agreement; and should Ransburg exercise said right during the fifth year of the agreement, Ransburg will refund one-fourth of said initial fee. No refund shall be made in case of termination by Ransburg after the expiration of said fifth year.

D. Ransburg is the owner of the following patents relating to its No. 1 Process:

2,442,986	2,486,877	2,567,781.
2,466,906	2,550,657	2,730,460

Ransburg is the owner of the following patents relating to its No. 2 Process:

2,651,287	2,695,002	2,728,607
2,658,009	2,706,964	2,728,689
2,658,472	2,718,477	2,733,171
2,684,656	2,723,646	2,764,712
2,685,536	2,728,606	

In addition, Ransburg is the owner of the following patents in the field of electrostatic coating which are not limited to any particular one of its electrostatic coating processes:

2,247,963	2,463,422	2,546,701
2,270,341	2,465,128	2,551,035
2,334,648	2,509,276	2,553,724
2,417,798	2,509,277	2,559,225
2,421,787	2,509,448	2,568,611
2,425,652	2,526,763	2,632,716
2,428,991	2,531,542	2,636,471
2,446,953	2,544,896	2,650,329
2,655,128	2,724,661	2,748,018
2,662,833	2,729,191	2,751,564
2,690,730	2,730,461	2,751,851
2,697,411	2,730,988	2,752,883
2,698,814	2,731,589	2,754,226
2,703,549	2,736,671	2,754,227
2,711,155	2,744,218	2,761,544
2,723,921	2,744,033	2,764,125

Although we feel that the possible harm from doing so would be negligible, we do not, give patent infringement indemnification on our No. 2 Process. We feel that our customers, as well as we, benefit from this policy. Although our developments permit us to adapt the process to any one of several different courses, we are proposing, as is our policy, our very latest developments to your company

as to which, from a patent standpoint, we cannot be assured at this time of 100% freedom of action. In the remote event that patent infringement should ever be alleged at a future date by some third party, we are then free to suggest to our customers some non-infringing modification of electrostatic coating. If we were to employ any other policy, we could conceivably be placed in the position of having some customer proceed to use the process at heavy expense to us and unwilling to adopt any suggestion regarding a modification which would avoid the possibility of infringement.

In all our years in developing and marketing electrostatic coating going back into the 1930s, during which time we have prosecuted a substantial number of patent applications, we have not run across any patent or application which, in our opinion, could possibly be infringed by your use of our No. 2 Process under agreement No. 6482. We realize it is general practice for a vendor of consumer products to give patent infringement indemnification; however, we do not believe it customary for the licensor under a patent position to give such indemnification. In this regard we refer to the type of license agreements issued by firms such as DuPont and R. C. A. for the use of patented manufacturing processes on the one hand and the manufacture of electronic equipment on the other.

In regard to the suggestion that Ransburg ought not to be able to terminate until later than the three year period provided by paragraph 6 (2), we feel the amendment proposed in paragraph C, above is more than fair. We can advise you that we have never had a policy of arbitrarily terminating our customer agreements at the end of three years or at any other time. In fact, with one exception involving a company which still remains a satisfied customer of ours, we have never terminated a customer agreement under paragraph 6 (2).

We wish to assure you that all of our outstanding agreements with such conservatively managed companies as General Electric, Westinghouse, I. B. M. and Bethlehem Steel are substantially identical to the agreement which we have proposed for Allegheny Ludlum, and that these outstanding agreements specifically do not contain a patent infringement indemnification clause and are terminable by us after a three year period.

We trust that the foregoing amendments will be acceptable to your company and if agreement No. 6482 as amended above is satisfactory to you, we would appreciate your signing and returning to us three copies of the agreement, as well as three copies of this letter. We will then sign all copies and return a copy of each for your files so we may then proceed with plans for the installation of our equipment in your plant.

Very truly yours,

Ransburg Electro-Coating Corp.
Merrill N. Johnson

MNJ:mk

cc Mr. James Ely, Patent Attorney
Allegheny Ludlum Steel Corp.
River Road
Brackenridge, Pennsylvania

Agreed to this day of
, 195 .
Allegheny Ludlum Steel Corp.
By

Accepted this day of
, 195 .
Ransburg Electro-Coating Corp.
By

PLAINTIFF'S EXHIBIT NO. CCCCC.

May 16, 1952

General Electric Company
Schenectady, New York

Attention: Mr. F. L. Neuhauser
Patent Department

Dear Mr. Neuhauser:

Pursuant to our telephone conversation of May 14, we are pleased to enclose sample copy of our proposed agreement for an installation for coating your automatic clothes washers and dryers in Louisville, Kentucky. Also enclosed is a proposed amendment to Paragraph 11 titled Future Inventions, which limits this clause to your Major Appliance Division.

Please note that we have stipulated an initial fee in Paragraph 10 in the amount of $26,250.00 and a minimum monthly fee of $500.00. These figures are sufficient for the installation of triple heads in the event you wish to modify the Future Inventions clause from the enclosed proposed amendment. In the event the Future Inventions clause and the 30 day minimum fee period are satisfactory to you as proposed, these figures can be reduced to $17,000.00 and $320.00 per month.

We shall appreciate your advice.

Yours very truly,
Ransburg Electro-Coating Corp.
E. M. Ransburg

EMR:eh
Enclosures
(In Duplicate)
Blind CC: Mr. E. A. Zahn
General Electric Co.
Louisville, Kentucky

PLAINTIFF'S EXHIBIT NO. GGGGG.

490 Mr. C. V. Boys on the Production, Properties.

There is a process by which threads may be made which is natural in that natural forces only are employed, and the thread is not in any way touched during its production. This is the old, but now apparently little-known experiment of electrical spinning. If a small dish be insulated and connected with an electrical machine and filled with melted rosin, beeswax, pitch, shellac, sealing-wax, Canada balsam, guttapercha, burnt india rubber, collodion, or any other viscous material, the contents will, if they reach one edge of the dish, at once be shot out in the most extraordinary way in one, two, or it may be a dozen threads of extreme tenuity, travelling at a high speed along "lines of force." If the material is very hot, the liquid cylinders shot out are unstable and break into beads, which rattle like hail on a sheet of paper a few feet off. As the material cools, the beads each begin to carry long slender tails, and at last these tails unite the beads in twos and threes; but the distance between the beads is far greater than that due to the natural breaking of a cylinder into spheres, as after the first deformation of the surface occurs which determines the ultimate spheres the repulsive force along the thread continues, and drags them apart many times their natural distance. As the temperature continues to fall and the material to become more viscid, the beads become less spherical, and the tails less slender, and at last a perfectly uniform cylindrical thread is formed. If sealing-wax is employed, and a sheet of paper laid for it to fall on, the paper becomes suffused in time with a delicate rosy shade produced by innumerable fibres separately almost invisible. On placing the fingers on the paper, the

web adheres and can be raised in a sheet as delicate and intricate as any spider's web.

It is interesting to see how these fibres fly to any conducting body placed in their path. If the hand is held there it is quickly surrounded by a halo of the finest threads. If a lighted candle is placed in the way, the fibres are seen by the light of the candle to be rushing with the greatest velocity towards it, but when a few inches off they are discharged by the flame, they stop, turn round, and rush back as fast into the saucer whence they came. The conditions for the success of this beautiful experiment are not very easily obtained.

146. Spinning sealing wax.—Fasten on to a thick wire a piece of sealing wax, about one inch long, by heating it, and thrusting the wire into it. Put the other end of the wire into a hole, either at the end or side of the conductor, so that the wax shall be at some distance off. Underneath where the wax is, either on the table or the floor, place a sheet of brown paper, merely to catch any drops which may fall when the wax is inflamed. Provide yourself also with a lighted candle, and a sheet of white paper. Direct your assistant (for in this experiment you must have one), to turn the machine, and stop it exactly at the time you may desire. Then standing near the wax, hold the white paper 4 or 5 inches from it, and light the sealing wax. When well lighted, blow it out, and at the same instant let the machine be turned, and exceedingly fine threads of wax will be thrown off, and collected on the white paper, as long as the wax remains melted. Stop the machine, light, blow out the wax, and turn the machine as before—more of the filaments will be thrown off, and thus any quantity may be collected, and if scraped together by the point of a pin, it will resemble the finest wool, such as cannot be procured by any other means.

ZELENY, Proceedings of Cambridge Philosophical Soc.
Vol. 18, pp. 71-83 (1915).

On the Conditions of Instability of Electrified Drops, with Applications to the Electrical Discharge from Liquid Points.

By JOHN ZELENY, B.A., Ph.D., Professor of Physics, University of Minnesota, U.S.A. (Communicated by Professor Sir J. J. Thomson.)

[*Read* 9 November 1914.]

IN a recent paper on the electrical discharge from liquid points*, a description is given of certain motions which are observed at the surfaces of such points when an electric current starts to flow from them.

The present paper is concerned with a study of this surface behaviour under a variety of conditions, and an explanation of the phenomena is given.

Description of Experiments.

1. A discharge point of the kind in question consists of a small drop of liquid at the end of a tube, usually only a fraction of a millimetre in diameter. The drop may be made to assume a hemispherical form by applying a suitable pressure to the liquid inside of the tube.

The arrangement of the apparatus used is shown in diagram in Figure 1. The discharge point A was made of glass or quartz and the current from it passed to the brass disc B (usually placed at a distance of 1·5 cms.) and then to earth through the galvanometer G. The reservoir C is joined to the bent glass tube D by the rubber tube E, which permits the reservoir to be raised or lowered for adjusting the pressure inside of the drop of liquid at the end of A. The liquid in the tubes is connected, by the wire F, to the source of potential and an electrostatic voltmeter.

In many of the experiments to be considered the essential parts of the apparatus were enclosed in a metal vessel to permit of work with various pressures and with different gases.

Unless otherwise stated, it will be understood throughout the paper that a positive discharge from the point is being considered.

2. When water is the liquid used in air at atmospheric pressure, it is noted, when the end of the point A is observed with a microscope, that as the potential is gradually raised, the surface of the drop being kept hemispherical by constant adjustment of the reservoir C, finally at a certain voltage the surface of the drop suddenly snaps back into a more flat position and the galvanometer indicates a momentary current. After adjusting the pressure so as to bring the surface to its first position, the phenomenon is only

* J. Zeleny, *Physical Review*, N.S., Vol. 2, p. 69, 1914.

peated after the potential has been increased above its former value. On continuing the procedure, the liquid surface soon takes on a continuous up and down motion, a current of like period passing to the plate. At last the oscillations become too rapid to follow and the top of the meniscus simply appears blurred. On increasing the voltage further, the outline of the meniscus suddenly becomes perfectly distinct and the current becomes steady, a telephone receiver in the circuit now giving no sound. At this stage of the discharge the luminosity is confined to a very thin coating on the liquid surface, whereas in the intermittent stage a faint light was observed extending, in the form of a brush, a good portion of the distance to the plate.

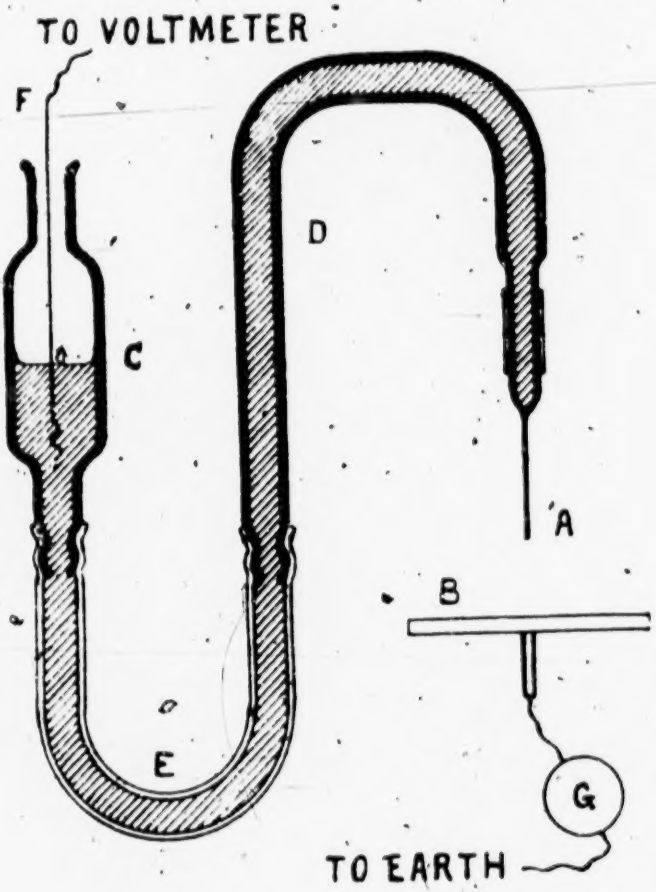

Fig. 1.

3. Experiments with water surfaces in air at reduced pressures show that the intermittent stage of the current is not obtained at pressures below about 60 cms. of mercury. In this region the current begins with a jump to a value of some magnitude, the meniscus of the liquid snapping back simultaneously to a lower

position; but the current may be maintained at a lower voltage than that at which it began.

4. A water-surface in carbonic acid at atmospheric pressure shows the same behaviour at the lower potentials as that described in § 2 when air was used, but as the voltage is raised the blurred meniscus suddenly changes in this case not to a distinct hemispherical form as before but into a steady cone with a faint dark line extending outward from the apex for some distance, as shown by the drawing "*a*" in Fig. 2.

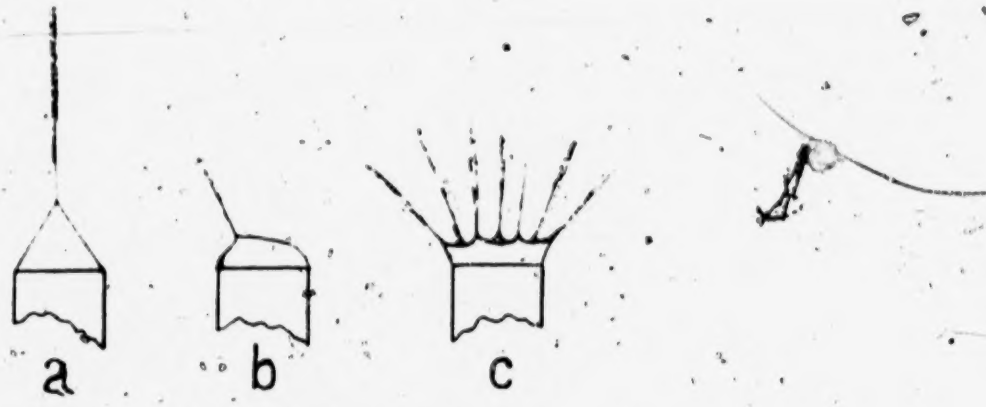

Fig. 2.

The height of the cone changes with change in the liquid pressure and when this is diminished sufficiently the form becomes that shown at "*b*" in the figure, where the small pointed portion at one side is to be noted as well as the faint dark streak extending out from it. The cone-shaped meniscus persists over a rather narrow range of voltages, and when the upper limit of this range is reached the surface again becomes agitated.

5. The potential at which the current ceases from a water surface in carbonic acid was found to be almost if not exactly identical with that at which the current ceases from the same point in air. Carbonic acid, however, shows the unique behaviour that this voltage remains unchanged for pressures down to about one-third of an atmosphere, below which pressure the intermittent stage of the current disappeared. The conical meniscus was not obtainable for pressures much below the atmospheric pressure.

6. In hydrogen no intermittent stage of the current was observed with a water surface whatever the pressure of the gas (below an atmosphere). The current begins suddenly with a considerable magnitude, as described in § 3 for air at reduced pressures.

7. An alcohol surface, both in air and in carbonic acid, was found to behave in the same way as a water surface does in carbonic acid, both as regards the oscillations with an intermittent current, and as regards the subsequent conical form of meniscus. For voltages well above that for which the steady conical surface changed into a blurred agitated one, the appearance became that shown at "*c*," Fig. 2, where there are a number of fine points with their attendant dark streaks arranged along the circumference of a raised edge.

For voltages at which the oscillations of the meniscus first appeared, these oscillations had a much smaller amplitude with alcohol than they did with water, and the quantity of electricity reaching the plate at each movement of the meniscus was also much less in the case of alcohol.

The behaviour with alcohol remained quite unchanged as the pressure was reduced below that of the atmosphere, in both air and carbonic acid. The cone form of meniscus was observed in air at a pressure of 12 cms. of mercury and in carbonic acid at a pressure of 25 cms. of mercury, these being the lowest pressures used with these gases. Moreover the potentials at which the current ceases were found to be the same in both gases and for all of the pressures used. This potential was, however, only about six-tenths of that at which the discharge stopped in air.

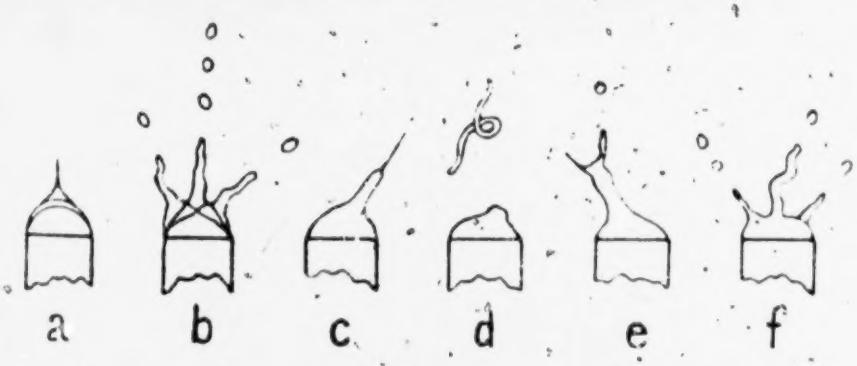

Fig. 3.

8. When the cone-shaped discharge surface of alcohol was examined with a microscope magnifying about 50 diameters in the instantaneous light of a Leyden jar spark, the dark streak seen along the prolonged axis of the cone was not resolved into drops. When examined without a microscope in weak continuous light, a form of brush of considerable angle was faintly seen extending outward from the end of the cone; but this brush showed no luminosity when examined in the dark. A luminous brush of the same form as this one was previously observed (§ 2) at the end of a hemispherical drop of water at each of the intermittent discharges from it.

9. When an alcohol meniscus is examined under instantaneous illumination as a current first starts to flow from it (i.e. during the intermittent stage), some of the shapes that the meniscus is seen to assume are indicated by "*a*" in Fig. 3. The peaked form tapers down to a point of vanishing diameter.

With voltages at which the surface shows a great deal of agitation when viewed in ordinary light, it is seen under instantaneous illumination that large masses and threads of liquid are pulled out of the surface. Some of the forms which have been observed are shown in Fig. 3 by the drawings "*b*," "*c*," "*d*," "*e*" and "*f*."

10. After the current from the conical form of discharge with alcohol has been allowed to flow for some time, the plate underneath the point becomes wet with a disc of liquid which has a diameter about equal to the distance between the point and the plate. From the amount of liquid thus carried over, it appeared possible that the whole current from the alcohol point might result from the charges carried by minute drops leaving the charged surface and impinging on the plate.

Experiments to test this point were made on the conical form of discharge in the open air, by noting what effect a blast of air, blown at right angles to the electric field between the point and plate, would have upon the current received by the plate. The receiving plate was divided into two parts, one of which was earthed directly and the other of which was earthed through a galvanometer. When the discharge point was placed directly over the division line between these two parts and a moderate blast of air from a foot-bellows was directed along the surface of the plate from the part connected to the galvanometer towards the second part, the current reaching the galvanometer was reduced to zero although the blast had no appreciable effect upon the discharging surface. When the point was moved so as to be over a portion of the plate at some distance from its edge, the same stream of air reduced the current flowing through the galvanometer but did not completely destroy it.

Under similar circumstances a current from a metal point, carried as it is by gaseous ions, would not have been appreciably affected by the stream of air which was used. It is evident, therefore, that all of the current in this case was carried by drops of liquid, much larger than ordinary ions.

A rough estimate of the size of these drops may be made from the observation that with a current of 2000 electrostatic units the conical point discharged alcohol at the rate of 10^{-4} cubic centimetres per second. The point had a radius of 0·0189 cm., was situated ·3 cms. above the plate and was maintained at a potential of 3300 volts. The electric surface density on the drops must be

less than what would correspond to a drop having the potential of the discharge point, and so an estimate was made based on later considerations and it was found that the radius of the drops is probably between 10^{-5} cms. and 10^{-4} cms. Accordingly many millions of these drops must be formed every second under the conditions existing in the conical form of discharge from an alcohol surface.

The ejection of these comparatively small pieces from the surface is evidently quite a different matter from the outflow of large drops from the tube, and is doubtless the result of a state of instability of the surface.

Conditions for Instability.

11. The conditions that are necessary for a charged surface to become unstable are exemplified by considering the equilibrium equation for a spherical drop

$$\frac{2T}{r} - p - 2\pi\sigma^2 = 0 \qquad (1),$$

where T is the surface tension, r the radius of curvature, σ the electric surface density, and p the excess pressure inside the drop over that outside.

The equilibrium becomes unstable when, p remaining unchanged, a small outward displacement of a portion of the surface increases the outward force due to σ, because of the increased curvature produced, more than it does the restoring pressure arising from surface tension.

To obtain a solution by this simple method, it is necessary to know not only the shape of the surface but also the distribution of the charge on it, both before and after the displacement in question.

The surface of a small drop at the end of a vertical tube is one of revolution and is nearly spherical. Let us consider the surface to be an ellipsoid of revolution about the axis of the tube, and consider a displacement arising from an elongation of the rotation axis. This elongation might result from liquid flowing into the drop from the tube above, the minor axis remaining unchanged, or it might result from a contraction of a portion of the drop near its place of attachment, the change of shape at the apex approximating more or less closely that of an ellipsoid of constant volume. The calculation of the distribution of the charge on any shaped drop suspended at the end of a cylinder is rather difficult. However, it is of interest to consider some ideal cases of isolated, charged, ellipsoidal drops, undergoing changes of shape as a whole in one of the two ways mentioned above, namely by keeping the minor axis

of the generating ellipse constant and hence having a variable volume, or by keeping the volume constant.

Let "c" be the semi-axis of rotation and "a" the transverse semi-axis, and consider in each case the equilibrium of a portion of the surface at the end of the axis of rotation inasmuch as experiment showed the instability to begin at this place on the drops examined.

12. First, consider the volume of the ellipsoid constant and that it has a constant charge Q. Equation (1) becomes

$$\frac{2T\epsilon}{a^2} - p - \frac{Q^2}{8\pi a^4} = 0 \quad \ldots\ldots\ldots\ldots\ldots\ldots (2).$$

Putting the first derivative equal to zero, to get the relation for the limit of stability, and remembering that a^2c = a constant,

$$Q^2 = 16\pi a^2 cT \quad \ldots\ldots\ldots\ldots\ldots\ldots (3).$$

Equation (2) shows that for this value of Q, the excess pressure, p, inside the drop vanishes.

For a sphere, equation (3) becomes

$$Q^2 = 16\pi a^3 T \quad \ldots\ldots\ldots\ldots\ldots\ldots (4),$$

a result obtained long ago by Lord Rayleigh*.

If Q and "a" are taken as constant, there is no instability, but for every value of Q there is a value of "c" which gives stable equilibrium.

Since in the drops experimented upon the potential V, and not Q, was maintained constant, cases will next be considered with that supposition.

13. Consider V and "a" constant. Equation (1) becomes

$$\frac{2T\epsilon}{a^2} - p - \frac{c^2e^2V^2}{2\pi a^4 \log^2 \frac{1+e}{1-e}} = 0 \quad \ldots\ldots\ldots\ldots (5),$$

the ellipsoid being considered prolate, and "e" being the eccentricity of the generating ellipse. The relation at the limit of stability is

$$V^2 = 2\pi a T \frac{\sqrt{1-e^2}\log\frac{1+e}{1-e}}{\log\frac{1+e}{1-e} - 2e} \quad \ldots\ldots\ldots\ldots (6),$$

which becomes for a sphere, at the limit $e = 0$,

$$V^2 = 24\pi a T \quad \ldots\ldots\ldots\ldots\ldots\ldots (7).$$

* Lord Rayleigh, *Phil. Mag.*, Series 5, Vol. 14, p. 184, 1882.

14. Lastly, considering V and the volume of the ellipsoid constant, instability sets in when

$$V^2 = 4\pi a T \frac{\sqrt{1-e^2}\log^2\frac{1+e}{1-e}}{(1+e^2)\log\frac{1+e}{1-e} - 2e} \quad \ldots\ldots\ldots\ldots(8),$$

and this expression, at the limit of a sphere, reduces to

$$V^2 = 12\pi a T \ldots\ldots\ldots\ldots\ldots\ldots(9).$$

It is seen that under the conditions here taken, when instability begins, the pressure inside the drop is greater than that outside the drop, whereas under the conditions assumed in § 13 the opposite is the case.

In the experiments with hemispherical drops of water at the ends of tubes it was observed that when instability commenced there was an excess of pressure on the inside of the drops and this was approximately equal to one-tenth of the whole pressure caused by surface tension alone. With a low meniscus however, the pressure inside the drops, under the same conditions, was found to be less than that outside.

It may be said that the values of V^2 given by equations (6) and (8) differ very little from those given by equations (7) and (9) respectively, for values of e as high as 0·2 or more.

15. The preceding results, and some further considerations, lead to the general expression (applicable to drops on the end of a tube)

$$V^2 = CaT \quad \ldots\ldots\ldots\ldots\ldots\ldots(10),$$

as giving the potential at which instability commences, C being a constant depending upon the shape of the drop and the manner in which it undergoes axial changes. We may test the expression experimentally by finding how the potential necessary for instability is dependent upon the size of the tube and upon the surface tension of the liquid used.

Experimental Results.

16. As the first example we will take some results obtained for water and alcohol. The potentials at which these surfaces ceased to be unstable were found to be 4050 volts and 2350 volts respectively. In agreement with our formula, the squares of these numbers are seen to be proportional to the surface tensions of the two liquids (taking 72 for the value of the surface tension of water and 24 for that of the alcohol used, which was nearly absolute).

As a further test of the surface tension factor in formula 10,

results, obtained some time ago with a number of liquids, are given in Table I for the potentials at which the surface oscillations, indicative of instability, ceased as the voltage was decreased. The list of liquids is confined to those which have an appreciable conductivity and still do not leave a solid residue on evaporation. The experiments were done in the open air (pressure = 74 cms. of mercury) with the point at a distance of 1·5 cms. from a plate.

TABLE I. Instability Potentials.

Radius of point, 0·0250 cm. Average temperature, 23° C.

Substance	Density	Surface tension	Instability potential	C
Acetone	0·790	24·9 dynes/cm.	9·30 electrostatic units	140
Methyl alcohol	0·804	25·3 "	9·25 "	137
Ethyl alcohol ...	0·812	25·3 "	9·25 "	137
Water	0·998	72·0 "	15·90 "	140
Acetic acid	1·053	30·0 "	9·67 "	125
Glycerine	1·259	65·2 "	15·17 "	142
Chloroform	1·483	27·0 "	10·17 "	153

Column 2 gives the densities of the liquids named in column 1. Column 3 gives the values of the surface tensions of the liquids, determined while in the apparatus by measuring the pressure in an uncharged hemispherical drop. These values are not very accurate as the readings for them were taken incidentally only, as the experiments were made for another purpose for which the surface tensions were not needed. The value given for the surface tension of glycerine was taken from tables, as a difficulty was found in the direct measurement owing to its high viscosity; and the value for methyl alcohol is taken the same as that of ethyl alcohol since no direct measurement was made and the two substances have very nearly the same value.

Column 4 gives the observed instability potentials expressed in electrostatic units. The last column gives the values of the constant C in expression (10), as calculated for each liquid from the tabulated values of V, a, and T.

When account is taken of the rather large experimental errors in the determinations of T, the values of C are nearly enough alike to show that the squares of the potentials at which instability begins are proportional to the surface tensions of the liquids.

17. For showing the dependence of V upon the radius of the discharge point, reference is made to a table of electric intensities, f, given in a previous paper (*loc. cit.*, p. 88) which were determined at the surfaces of water drops ranging in radius from 0·0146 cm.

to 0·0543 cm. when the oscillations in question and the currents from the points were observed to stop. Since the current from a point also starts at this stage it was then thought that the values of f obtained were those requisite for starting a discharge, but it is known from the considerations given in this paper that the oscillations indicate rather the beginning of instability at the surface, although with water the two actions start at potentials which are not greatly different.

The results, in the table referred to, show that $f\sqrt{a}$ = a constant, and putting $f \propto \frac{V}{a}$, we get $V^2 = a \times$ a constant, which is the relation in expression (10).

Taking the average value of the constant C from Table I, expression (10) becomes $V^2 = 140aT$ and for the sake of comparison with the expressions obtained in §§ 13 and 14, this may be put in the form $V^2 = \frac{16\pi aT}{0{\cdot}36}$.

It was found experimentally (*loc. cit.*, p. 74) that the surface density on the end of a hemispherical drop attached to the end of a tube, with a plate at a distance of 1·5 cms., is only about six-tenths of that on an isolated sphere of the same diameter and having the same potential. The square of this number, or 0·36, must be introduced into the denominators of the theoretical expressions in §§ 13 and 14 to permit of their comparison with experimental results on drops at the ends of tubes. The experimental coefficient 16 is seen to be between the two coefficients 24 and 12 obtained in §§ 13 and 14 respectively, and this may be taken to indicate that the experimental drop changes form in a way intermediate between that of keeping a constant volume and that of keeping a constant cross-section.

Discussion.

18. The relation of the potential at which the surface of a charged drop becomes unstable, to that at which an electrical discharge starts, will now be considered. A study of a table giving surface tensions indicates that in air at atmospheric pressure the limit for instability is reached on the surface of drops of all substances which are liquid at room temperature, with the exception of mercury, before a potential is reached at which an electrical discharge through the air begins. But in hydrogen for example the potential for an electric discharge from a water surface is smaller than the potential for the beginning of instability.

The size of the tube on which the drop is formed is of no great consequence for the relationship in question, since it has been shown

* J. Zeleny, *Physical Review*, Vol. 25, p. 317, 1907.

that for metal points with a radius greater than 0.025 cm. the voltages at which a discharge begins are proportional to the square roots of the radii of the points, which is the same relation as that obtained above for the beginning of instability with liquids, although for points smaller than the value given the voltages necessary for starting the current are larger than this relation would indicate.

After a discharge has started from a surface, a large increase in the voltage may not bring on instability, because while a current is flowing the electric intensity at the surface varies but little with the voltage used (*loc. cit.*, p. 85).

Since the potential necessary for a discharge depends upon the pressure of the gas while the potential for the beginning of instability does not, it is possible to have instability begin first in a gas at atmospheric pressure and to have a discharge begin first in the same gas at reduced pressures.

19. With water surfaces in air at atmospheric pressure, the potential at which a discharge starts is only a few per cent. higher than the potential at which instability sets in, and as the potential is gradually raised above this latter value the instability at the surface stops suddenly and a steady current flows from the surface. This indicates that either the surface tension is increased by the current or the electric intensity at the surface falls slightly as soon as the current starts. There is some evidence for both views.

A sort of electrical discharge is present with water surfaces as soon as instability begins as is shown by a faint luminosity seen extending some distance from the point, but apparently this discharge is brought on by the changes of shape caused by the instability and may be confined altogether to the surfaces of the flying drops.

The conical form of discharge surface, seen when carbonic acid is used with a water surface or when liquids of low surface tension are used, makes its appearance over a certain range of voltages in cases where the instability voltage is considerably lower than the discharge voltage. As the liquid is being pulled out rapidly from the tip end of the meniscus in the form of threads, the surface distribution over the rest of the meniscus becomes altered so that equilibrium necessitates the conical form of surface. This form of surface should be obtainable also with a water surface in air, if the discharge potential were raised sufficiently. The latter condition can be produced by increasing the pressure of the air, and on trial it was found that the conical form came on as predicted when the pressure of the air was increased but 10 cms. of mercury above that of the atmosphere.

The presence of a little alcohol vapour in the discharge vessel also made the conical form of surface appear, by lowering the surface tension of the water.

20. The facts noted in §§ 5 and 7 that with water in carbonic acid and with alcohol in air or carbonic acid, the oscillations of the meniscus began at a potential in each of the cases which was independent of the pressure of the gas over a considerable range, are explained by the discharge potential being much higher at atmospheric pressure than the instability potential, so that even at much lower pressures the discharge voltage was not reduced enough to be below the potential for instability.

The successive individual discharges, mentioned in § 2, which are observed at increasing potentials when a discharge is first started from an old water surface, are doubtless caused by the surface having a low surface tension owing to contamination. As pieces of the liquid are pulled away, the contamination gradually disappears and a higher and higher voltage is necessary to produce instability. The falling of the meniscus after each of these discharges shows that an increase in the surface tension has taken place.

At a later stage where the surface undergoes continuous oscillations at a given voltage, a different cause doubtless enters, the surface becoming stable intermittently owing to electric shielding by the material pulled out of its surface.

Sporadic discharges like those considered above are often noticed with metal points at voltages far below the final discharge potential, and it is possible that something of the same nature takes place there as in these cases, a part of the adsorbed layer of gas and water being pulled off from the surface at each discharge.

21. The expression given in § 15 for the potential at which instability begins applies to cases where the medium between the point and plane is a gas, and thus having a dielectric constant of approximately unity. If the experiment were done in a non-conducting fluid not miscible with the liquid of the drop, the expression would have to include k, the dielectric constant of the new medium, and would be written $kV^2 = C\alpha T$. Evidently, the dielectric constant could be determined in this way by measuring the surface tension between the two liquids and the voltage at which instability starts.

22. It follows from the results recorded in this paper that before a potential is reached which would result in lightning striking a tree, for example, the leaves, if wet, will discharge water from their edges in the form of minute electrified drops which will form an upward shower tending to neutralize the electric field. But since the discharge potential is so near to the instability potential for water, it is not likely that this phenomenon plays any important part in the atmospheric electricity during storms.

The condition for instability also sets a limit to the possible size of charged rain drops, but the charge on drops of the usual size would have to be very large indeed before instability would arise from this cause.

Summary.

23. Certain motions of agitation, which are observed at the surfaces of drops of liquid when an electric current starts to flow from them, are described and the conditions under which the movements occur are studied (§§ 2—9).

It is shown that in some cases (§ 10) the observed current is all carried by minute charged drops, formed of liquid which has been pulled from the discharging surface.

The ejection of these masses from the surface occurs when the stabilizing effect of surface tension is overcome by the instability caused by the electric forces (§ 11).

A relation between the potential at which instability begins, and the dimensions of the drop and the surface tension of the liquid, is derived for some ideal cases (§§ 11—14), and a formula applicable to the drops used in the experiments is given (§ 15).

In agreement with theory, the experiments show that the square of the potential at which instability begins is proportional to the surface tension of the liquid (§ 16) and to the radius of the tube on which the drop is formed (§ 17).

In air at atmospheric pressure, instability sets in before the true electric discharge through the gas begins, for all liquids except mercury (room temperature assumed) (§ 18).

In a gas like hydrogen or in air at reduced pressures, the electric discharge may be obtained in many cases before instability occurs (§ 18).

An explanation of the observed effects is given (§§ 19, 20), and some outside applications of the results obtained are considered (§§ 21, 22).

A part of the work on this investigation was done at the Cavendish Laboratory, and I wish to express here my thanks to Prof. Sir J. J. Thomson for his kind and helpful interest in the work and for placing the necessary apparatus at my disposal.

THE

PHYSICAL REVIEW.

INSTABILITY OF ELECTRIFIED LIQUID SURFACES.

By John Zeleny.

IN a recent paper[1] a brief description was given of the appearance of a liquid surface undergoing disintegration owing to instability arising from an electric charge.

The observations recorded were made in connection with some experiments on the electric discharge from liquid surfaces and the work was confined to eye observations, through a microscope, of the surface in question when this was illuminated by the light of a spark from a Leyden jar. Some of the phenomena appeared to be of sufficient interest to warrant the making of a more accurate record of them by the aid of photography, and a few results obtained by this method are described in this paper.

The apparatus used for getting the electrified surface was similar to that used previously and for details reference is made to the paper mentioned. Briefly, the apparatus consisted of a vertical glass tube, 0.02 mm. in diameter, joined from its upper enlarged end by rubber tubing to a reservoir of the liquid. A drop of liquid at the lower end of the small glass tube was the part under observation. The liquid was charged to several thousand volts from a static machine, and a grounded plate was placed about 2 cm. below the end of the glass tube. Ethyl alcohol was used for nearly all of the experiments inasmuch as water is not a convenient liquid for showing some of the phenomena, because, owing to its high surface tension, the potential at which instability of its surface is first obtained in air at atmospheric pressure is nearly the same as that at which an electric discharge begins.

2. The source of light mostly employed in taking instantaneous pictures of the liquid was a condenser discharge between magnesium electrodes in air. For some of the exposures the spark was passed through mercury

[1] Proc. Camb. Philos. Soc., 18, p. 71, 1915.

vapor at atmospheric pressure in an arrangement similar to that described by C. T. R. Wilson.[1]

An induction coil was used for charging the Leyden jars, and this was provided with a rotary, mercury-jet interrupter which could be operated successfully up to 800 interruptions per second for taking moving pictures of the phenomena studied. In taking such pictures an image of the drop was focused on a vertical slot in the center of a long board placed about 2 meters from the object. A photographic film was placed in a slide on the far side of this board, and this slide, propelled by strong rubber bands, was shot past the opening in the board at a speed that carried it a distance equal to the width of the opening in the time between two interruptions. For these pictures transmitted light and the magnesium electrodes were used exclusively.

3. Some of the photographs which were taken are reproduced in Plate I. The magnification is not the same for all of the pictures but it can be estimated in each case from the diameter of the glass tube which was 0.92 mm. throughout. The liquid used was alcohol except for the case represented by Fig. 7. No luminosity accompanied any of the phenomena shown so that the so-called point discharge was not present and all transfer of electricity from the charged surface was effected by means of droplets of liquid and none by gaseous ions.

Two series of pictures taken in the manner described in § 2 are shown in Figs. 1 and 2, the time interval between the separate exposures being approximately one eight-hundredth of a second. The pictures are to be followed from right to left as the downward motion of the flying drops indicates. The doubling of some of the pictures is due to irregularity in the action of the illuminating spark. In the experiment represented by Fig. 1, the alcohol was charged to 5,000 volts and the liquid in the reservoir was 3 cm. above the end of the glass tube, while for Fig. 2 the corresponding numbers were 6,000 volts and 4 cms.

4. A few general statements may help to make clear what is going on in these pictures. Suppose the liquid unelectrified and the supply reservoir raised until liquid issues from the end of the tube at a certain slow rate. Drops with a diameter larger than that of the tube will form, break off and fall away. On electrifying the liquid sufficiently and lowering the reservoir to keep the outflow of liquid the same as before, the drops will be drawn out into more or less cylindrical form before they break from the tube. After severance these cylindrical pieces will coalesce into drops whose diameter may be considerably smaller than that of the glass tube from which they came.

When however the electrification is increased to a point where the electric force at the surface of the liquid attains a certain limiting value, which depends upon the surface tension of the liquid and the radius of curvature of its surface, then, irrespective of whether or not the liquid pressure is sufficient to force liquid out of the tube, the surface becomes unstable and any slight accidental displacement of the surface results in a rapid increase of that displacement. This condition is first reached at the lower end of the drop where the electric density is greatest. What happens is that the liquid at this place is pulled out into a fine thread, which eventually breaks up into minute drops.

5. Returning now to Figs. 1 and 2, it will be seen that very fine points of liquid appear on some of the drops at the end of the tube and also on some of the detached masses. These are the places where there is surface instability, although the fine threads of liquid spoken of can hardly be made out and the myriads of small droplets forming from them are quite invisible.

The fact that instability is confined to but one very small area of the surface is to be explained by the redistribution of electric charge caused by the liquid drawn out from the first place that breaks down. It is possible, however, by increasing the voltage of the surface to have a number of these places of instability existing at the same time on a surface of the dimensions used in these experiments.

As already explained the emission of the large drops seen in the figures is not an accompaniment of surface instability but is conditioned by the excessive pressure of the liquid in the tube. This pressure may be removed by lowering the supply reservoir and then the surface of the drop on the tube appears quite stationary with one or more of the fine points of liquid coming quite abruptly out of the surface where instability obtains. It is noted that the elongated detached masses of liquid retain the instability points for a short time only after they are separated from the tube above. The numerous droplets formed at the points soon carry away enough electric charge to reduce the surface to stable conditions, after which each mass of liquid quickly collapses into a spherical drop. The rapidity with which this collapse takes place is well illustrated by the first two pictures on the left in Fig. 1. In the second picture the elongated cylinder still carries the pointed end while in the first picture, only one c' 'st-hundredth of a second later, the whole has collapsed into a nearly spherical form.

The shielding effect of the drops explains a common behavior illustrated by the pictures in Fig. 1, where it is seen that the drops fly alternately to one side and the other side of the vertical.

The electric force acting on some of the fine threads of liquid often undergoes very rapid changes in direction on account of the drops of liquid in front. Thus in the lower part of the sixth picture in Fig. 2 the fine thread appears as a large double loop, owing to the shielding effect of a drop just off the picture. Smaller but more complex loops are seen in some of the other pictures as for example in the third picture of Fig. 1. Again, the two successive pictures of Fig. 8 show a complete reversal of field. Fig. 3 shows a case where the liquid was torn into shreds by forces varying rapidly in direction. A number of the pieces are barely visible, being out of focus. The appearance at the end of the cylinder in Fig. 4 is that of clouds of finely divided material.

6. Under certain conditions of potential and hydrostatic pressure it is possible to get the alcohol drop at the end of the tube to assume the form of a cone with a fine thread of liquid coming from its apex. This condition is quite steady and is especially suited for a closer study of the liquid thread, which characterizes the state of instability, as well as of the droplets into which the thread disintegrates. The general appearance of this stage is shown in Fig. 5 which represents a picture taken after an exposure of 30 seconds with light concentrated upon the object from an arc lamp placed at the side. The potential of the drop was 5,000 volts.

The thread or stem of liquid coming from the apex of the cone actually had a much smaller diameter than the picture shows since it was not perfectly stationary during the exposure. Measurements of the thread with a microscope showed its diameter to be approximately 0.004 mm. Combining this value with a measurement of the rate of emission of the liquid it was found that the thread was pulled out at the rate of about 8 meters per second. The liquid thread remains intact for but a short distance in this case, breaking up into drops rather suddenly at the place where the enlargement shows in the picture. This enlargement is not apparent however in eye observations with a microscope, the drops flaring out gradually from the solid stem.

The spreading of the drops formed from the central thread of liquid into a more or less conical volume is most probably due to the combined action of the divergence in the electric field and of the mutual repulsion of the drops. No evidence has been obtained of any still finer threads coming from the end of the thread visible in the picture.

The line of demarcation seen in the brushlike cloud of drops shows these to be of two different sets. The outside portion is presumably made up of the set of comparatively small drops which form between the main drops whenever any liquid jet breaks up into drops. None of

the individual drops could be seen in flight with a microscope in instantaneous light, but high powers could not be used owing to their short working distances. Rapid evaporation doubtless made futile the attempts which were made to observe them after catching them on some solid surface. The measurements given above show that even if a length of thread equal to twice its diameter went into the making of each drop, the number of these drops formed per second would be a million.

It may be remarked that the brush spray appears colored both by transmitted light and by reflected light, the colors persisting in each case when the eye is within about 45° of the direction of the light. The colors depend not only on this angle of sight but differ also for the different portion of the brush, indicating thus a difference between the sizes of the drops at these parts.

It should be added that when the condition represented by Figs. 1 and 2 is viewed in continuous light it too has the appearance of a more or less compact brush, like that in Fig. 5, although the outline is not so sharp and the appearance is somewhat granular.

7. On reducing the hydrostatic pressure below the value which was requisite for maintaining the single central spray shown in Fig. 5, the cone of liquid flattens into a drop and the thread of liquid now issues from the side of this drop. Under these conditions of pressure it is possible by increasing the voltage to obtain two points of instability on the surface where two jets of liquid with their sprays of drops come from the surface, as shown in Fig. 6, which is again a time exposure by side illumination. By increasing the voltage still further eight or more such stationary jets may be obtained at the same time, the jets being all arranged on the outer edge of the drop.

8. Glycerine was used in some of the experiments because its viscosity is so much greater than that of alcohol. When the conditions were arranged for a single thread coming from a steady surface it was found that the thread was pulled out in this case a distance of 15 mm. before it underwent disintegration into drops. The set of large drops flared out in their flight into a fan similar to that obtained with alcohol (Fig. 5) but the small drops all shot out from one place in directions at right angles to the axis of the thread and the sharp outer boundary of their paths formed a paraboloid of revolution about this axis. The phenomenon was not sufficiently stationary to permit a successful time exposure to be taken by reflected light, but Fig. 7 shows a picture taken with a 2.5 seconds' exposure by transmitted light of a part of the thread coming from the drop of glycerine. The potential used was 7,000 volts. The diameter of this thread was approximately 0.007 mm. and the speed with

which it was pulled from the drop was about 3 meters per second. The diameter of the drops was found by catching them in various ways and measuring them under a microscope. The large drops in the central brush differed considerably in size but had an average diameter of about 0.01 mm., and the diameter of the small ones in the outer flare was approximately one quarter of this value.

The long known experiment of threads being pulled from highly electrified molten sealing wax is doubtless an example of the action described in this paper.

I am greatly indebted to the skill of my assistant, Mr. W. B. Lang, for the success of the pictures.

SLOANE LABORATORY,
YALE UNIVERSITY.

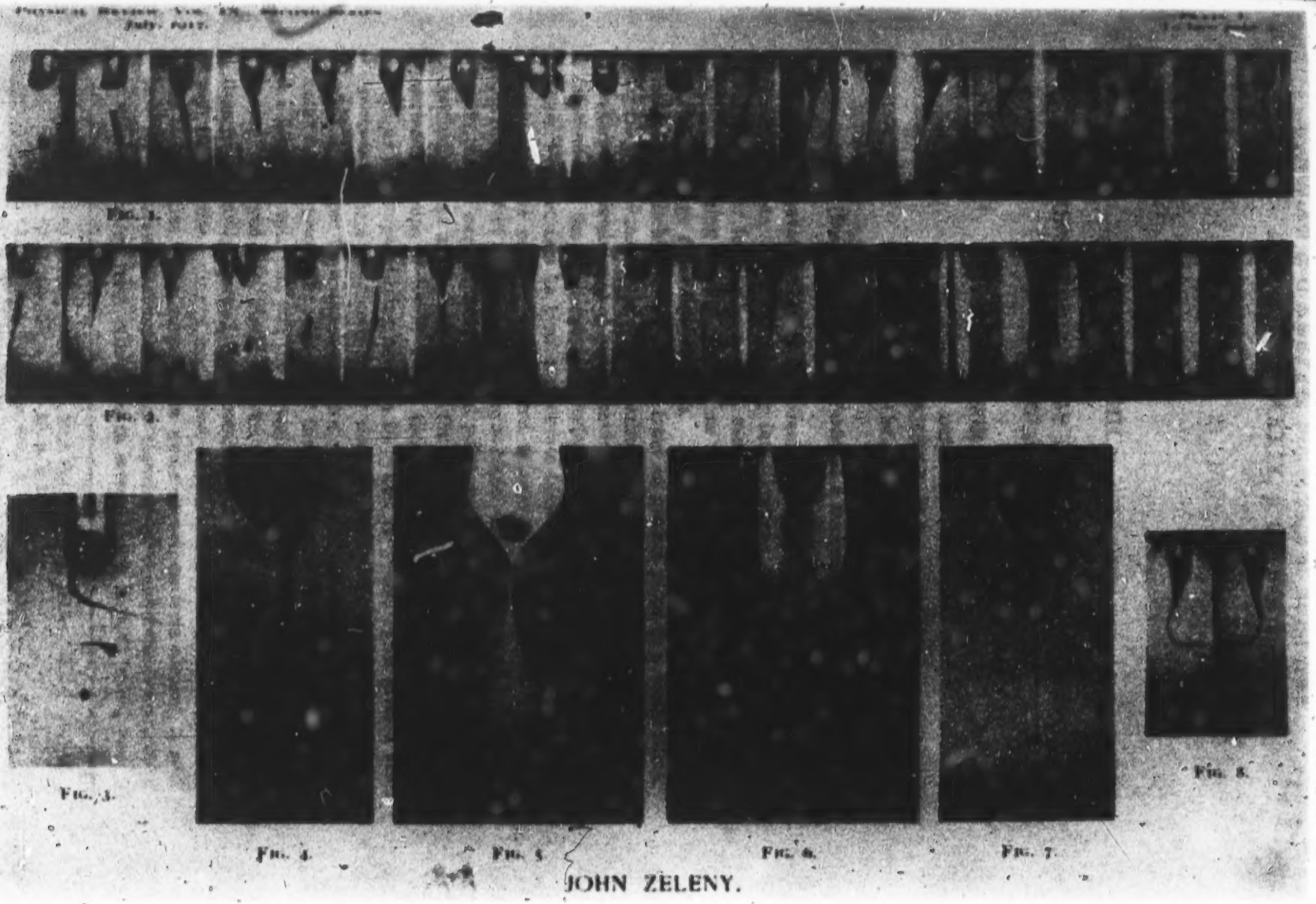

FIG. 1.

FIG. 2.

FIG. 3.

FIG. 4.

FIG. 5.

FIG. 6.

FIG. 7.

FIG. 8.

JOHN ZELENY.

Academy, Vol. XXXIX, p. 21 (1929).

III.

THE IONS PRODUCED BY DISCHARGES AT LIQUID SURFACES.

By PROFESSOR J. J. NOLAN

AND

J. G. O'KEEFFE, M.Sc.,

University College, Dublin.

[Read 11 November. Published 9 December, 1929.]

While there have been many investigations of the phenomena of discharge at metal points, no corresponding investigations of discharge at liquid surfaces appear to have been made, except those of Zeleny. In a series of papers, beginning in 1914, Zeleny has worked out the main characteristics of the discharge from liquid points. Amongst other things, he observed[1] that when a discharge was passing from an alcohol point to a metal plate, the plate gradually received a coating of alcohol. Photographs of the discharge[2] showed drops of liquid leaving the point. Zeleny conceived that the current in the discharge was carried by the liquid in the form of small drops. To test this he blew a moderate blast of air across the gap, and found that the current was reduced to zero, although the blast had no appreciable effect on the discharging surface. He noted that under similar conditions the current from a metal point would not be seriously affected. Concluding that all the current in the discharge from the liquid point is carried by drops of liquid larger than ordinary ions, he computed the radii of the drops as lying between 10^{-4} and 10^{-5} cm. This gives a size for these carriers not merely larger than the ordinary small ions, but considerably larger than the large ions, for which the computed radius[3] is about 4×10^{-6} cm. The mobility of the large ions is about 0·00033 cm./sec. in a field of 1 volt/cm., and the carriers of the liquid discharge, considered as singly charged ions, would be even more sluggish. Even if we imagine them to be heavily charged, their mobility will still be small in comparison with that of the ordinary small ions. If Zeleny's conclusion is correct, and if it applies to discharges from water as well as from alcohol, it will have an important bearing on those theories[4] of thunderstorm electricity in which discharge from rain-drops in intense fields is postulated.

---

[1] J. Zeleny, Proc. Camb. Phil. Soc., 18, p. 71, 1915.
[2] J. Zeleny, Phys. Rev., 10, p. 1, 1917.
[3] J. J. Nolan, Proc. Roy. Soc., A, 94, p. 112, 1917.
[4] C. T. R. Wilson, Journ. Frank. Inst., 208, p. 1, July, 1929.

PLAINTIFF'S EXHIBIT NNNNN.

Binks Manufacturing Company
3114 Carroll Avenue
Chicago 12, Ill.

November 5, 1956

Mr. Burke B. Roche
Expenditures on Electrostatic Project.

Dear Mr. Roche:

As you requested, I am listing below the complete expenditures that have been made so far on electrostatic development:

Expenses (Salary & Material) incurred at Binks Manufacturing Company, May 1951 thru 1955		$ 6,201.49
Midwest Research Institute		
1st Contract, March 1953 thru July 1953	$ 7,967.90	
Three Month Extension of 1st Contract, August 1953 thru October 1953	5,762.99	
2nd Contract; November 1953 thru April, 1954	12,573.88	
Ninety Day Extension, July 1954 thru October 1954	1,687.07	
Total		27,991.84
Patent Search and Applications		
Docket 5303, Patent Search	$ 115.00	
Docket 5305, Patent Application, Wire Emitter—United States	291.00	
Canada	162.60	
Docket 5306, Patent Application, Slot Emitter—United States	268.00	
Canada	184.50	
Total		1,021.10

Development Project 108		
Work done in testing for Ford Motor Quotations		
Purchased material	$ 4.00	
Fabrication labor	64.24	
Development & Engineering	800.00	
Total		$ 868.84
Development Project 111		
Electrostatic Development—General		
Purchase material	108.49	
Fabrication Labor	84.10	
Engineering & Development	1,486.00	
Total to date 9/30/56		1,678.59
Power Pact purchased from Ashdee Products Company		5,250.00
Equipment manufactured by Binks which was used by Midwest Research Institute during work for Binks and then presented to Midwest Research Institute as a gift upon completion of the project—Binks' cost		867.14
Total to Date		$43,279.00

Of course, the above figure does not include Mr. Gustafson's time or my time nor does it include any travel expenses which were considerable taking into account the trips to Midwest Research Institute in Kansas City as well as Detroit.

Very truly yours,

John W. Baur

PLAINTIFF'S EXHIBIT QQQQQ

Midwest Research Institute
Engineering Division
16 July 1953

Proposal
R-230

Prepared For
Binks Manufacturing Company
3114-40 Carroll Avenue
Chicago, Illinois

Design of an Industrial Electrostatic Coating System
Midwest Research Institute
Engineering Division

Proposal
R-230

Design of an Industrial Electrostatic Coating System

1. Introduction

The Institute is nearing completion of a research program for the Binks Manufacturing Company having as its general objective the evolvement of a new industrial painting method. The research program, essentially exploratory in nature, was begun with an initial study phase in which current industrial coating methods were reviewed by means of examining patent and commercial literature and by a visit to a factory installation of an electrostatic spraying system. The program rapidly progressed to an experimental basis during which an evaluation by test of several methods of emitting and transporting paint was begun; this evaluation is still underway at the present time.

The paint emitters studies to date have been.

a. Air duct
b. Hollow needle
c. Slotted wedge

These methods were handled in the above order; the first, being particularly unsuccessful, was an attempt to form a paint film on the interior of an air duct and then atomize it off the sharp exit edge of the duct electrostatically. The hollow needle method is quite successful in the process of atomizing the paint which is extruded through the center of the needle; but the needle size which atomizes most efficiently is somewhat limited in its maximum paint flow.

The third scheme, which is currently being evaluated, essentially consists of a slotted wedge from which paint is extruded under air pressure. A rough equivalence to placing many needles side by side is obtained. This device produces a uniform finely atomized pattern at considerably higher rates than a group of needles having the same array dimension as the length of the slot. The slotted wedge emitter is sufficiently promising as the core of an eventual industrial spraying system that it forms the primary basis for the following proposal.

II. Proposal

It is proposed that the Institute extend the general developmental program, related to industrial spraying systems and methods, leading to the objectives outlined below; the boundaries of the investigation and the estimated required appropriation to be as described in the Objectives and Budget Sections, respectively.

III. Objectives

The preliminary success experienced with a slotted wedge paint emitter leads to a definite future objective of this proposed extension: The development of a prototype industrial coating system suitable for lacquer or varnish spraying of flat or large radius surfaces, using the slotted wedge emitter as the basic component of an overall system design. The term slotted wedge emitter encompasses the device as is now being tested and all future improvements or modifications having the same general design feature.

The detailed objectives related to this prototype system development are:

A. A determination of the proper value or range of values of the following variables that will produce a high quality coat:

1. Viscosity
2. Field Strength
3. Drying Retarders
4. Transport Distance
5. Emitter Critical Dimensions
6. Material Pressure
7. Flow Rate

B. A mechanical design of a flexible coating system, easily adjustable for a wide variety of work shapes and sizes. This design shall be made with an attempt to simplify the component parts as much as possible in order to keep manufacturing costs to a minimum.

C. Evaluation under test of the performance of the entire system when coating various work shapes.

A secondary, but major category of the proposed work is exploratory in nature. The development of a workable coating system as described above are of prime importance, but it is felt that investigations should be continued along

other lines as well. The need for paint emitters that will satisfactorily coat materials of shapes other than sheets or large radius curves is evident and forms the basis of the objective for this secondary proposed phase. This objective is the development of other types of paint emitters than the slotted wedge suitable for special work shapes such as interior surfaces and cavities.

IV. Discussion

The proposed program is a formulation of two general goals; one, the development of a workable coating system that can be production engineered to a potentially marketable item and the second, essentially an extension of the present program in an exploratory sense.

It is felt that the coating performance of the slotted wedge is such that it is quite probable that an efficient, flexible coating system can be devised. A two-inch long, 0.001 in. wide slot assembly has been tested to date which produces a finely atomized spray at low air pressures resulting in a high-gloss coat. Depending upon the emitter-to-work distance the coating pattern can vary from roughly circular to elliptical in shape. It is intended to stack these slotted emitters on a common axis, producing an extension of the individual slot patterns along one line. This type of array can be repeated in sufficient numbers to meet the required paint flow rates, although a single stack may be sufficient for some work. It is, of course, possible to curve the stack axis so as to conform to general curvatures of particular production items being coated.

Experience obtained so far on the slot emitter does not indicate any clogging difficulty, however, the system will be operated on an intermittent basis to determine the problems in this respect.

Electrostatic coating of pieces having cavities or sharp

internal radii is known to be extremely difficult and has been by-passed by coating the part in general electrostatically and then touching up the inaccessible regions with a conventional hand spray gun. Industrial coating systems in which an air spray gun is rapidly reciprocated across the work dimension have been most successful in this respect. Electrostatic coating of cavities will have to be handled by special techniques.

The hollow needle emitter or a variant on it could be adapted, for instance, to the problem of painting the interior surfaces of egg-crate fluorescent light diffusers. There would be a requirement for rapid handling of this diffuser in placing it in proper position with respect to a special emitter containing a needle for each cavity of the diffuser. The voltage requirement for this operation would be relatively low, and the cost of the emitter would not be high. The above seems as a good example of a special requirement for a paint emitter.

The case of air flow to augment electrostatic field effects is still being considered and may prove helpful in coating materials having cavities.

IV. Budget

The total cost of the proposed project will be determined by the time directly devoted to this work by members of our professional staff, plus out-of-pocket expenditures for supplies and incidental expenses as required to accomplish the stated project objectives.

Based on the Institute's experience in forecasting research and development costs, it is estimated that the cost of the project will be:

Staff Services	$14,350
Supplies, Travel, Misc.	650
Total Estimated Cost	$15,000

The Institute will extend all possible effort to accomplish the stated objectives within this estimate. Under no circumstances will it expend more than this sum without prior consultation with, and approval by, the sponsor.

If the project is completed in a shorter time, with less expenditure than estimated above, or if at any time during the course of the project it should be mutually agreed to conclude the work because of technical or policy decisions, the sponsor will be charged only for the expenditures actually incurred as of the date of termination.

Midwest Research Institute
P. D. Wickersham,
Project Engineer.

Approved by:

F. N. Stephens, *Manager,*
Engineering Division.

PLAINTIFF'S EXHIBIT RRRRR.

Midwest Research Institute
Engineering Division

Progress Report No. 1

May 15, 1953

Binks Manufacturing Company

Project No. 971-E-433.

A Study of The Application of Dynamic and Electrostatic Techniques to Paint Spraying Systems.

I. Introduction.

The subject program is concerned with the development of new and better means of applying paint to variously shaped objects to form the basis for an industrial painting process. The project has been established on an initial study phase which comprises a literature search and an associated experimental program. Currently employed electrocoating techniques in the industry are to be studied with an eye towards evolving basic methods or alterations, resulting in an improved process. The general method of electrocoating is to form a major part of the work, but is to be augmented by a study of airflow and ultrasonic techniques.

The objective of this study is the recommendation of a method to be employed in the design of a prototype coating system.

II. Project Activity Summary.

A. Literature Survey

To date, the major portion of the work that has been carried out in connection with this project has consisted of a survey of a number of United States Patents furnished by the project sponsor. This study involved the separation of those patents directly or indirectly pertaining to a coating processes from the irrelevant ones in the group, and a subsequent review and abstracting of information contained in these selected patents. This search has been most useful in supplying project personel with much needed background material. A summary of the highlights of this study is presented below.

The patent search covered over 200 patents. Some 87 of these were found to apply directly or indirectly to the problem of depositing coating materials on articles or materials. These 87 patents indicate that the technique of using electric fields in the application of coatings is a long-established art. As early as February, 1924, an application for patent was filed on "an invention relating to articles of manufacture consisting of a support and a layer of comminuted material deposited thereon; and more particularly to producing and maintaining the physical union of the material and the support," which employed electric fields for the purpose of depositing the comminuted material on the supporting material.

A little over four years later, in December, 1928, the Western Electric Company, Inc., filed an application for patent of "an invention relating to methods and apparatus for finishing metal parts." This patent covers a direct application of the electrostatic method of paint spraying inasmuch as it states that "in order to accomplish the uniform deposition of coating material, this invention contemplates the conveying of metal parts or other articles

to be coated through a closed chamber, the parts being connected to one terminal of a source of high potential electric energy. The opposite terminal of this source is connected to a nozzle through which an atomized spray of coating material is introduced into the chamber, thus giving the particle of coating material in the atmosphere of the chamber a charge opposite to that of the article to be coated." The patent farther states that, "to prevent undue coating of the inside of the chamber, the walls are connected electrically to the same source of potential as is the nozzle."

An improvement over this electrostatic spraying method was realized in a patent assigned to the Research Corporation of New York, New York, application for which was filed in March, 1934. According to the specifications of this patent it was found that it is possible to cause deposition of coating material in pattern form by "controlling the electric field distribution through electrode shaping."

A variation on the coating method was covered by a patent filed in February, 1935, and subsequently assigned to the Raymakers Syndicate, Ltd., of London, England. This patent covers an electrostatic coating method and apparatus which contemplates applying the coating material by rotation or dipping and then smoothing the finish and removing the excess coating material by subjecting the coated article to the effects of intense "electric and magnetic fields"; a detearing operation.

In addition to these patents dealing directly with the application of paint to various articles and materials, several others were issued up to the year 1941 which cover electrostatic methods of depositing abrasive materials, flocking, and even liquids such as glue, to sheets or webs and other articles and materials.

In July, 1941, a patent on an invention by Harold P. Ransburg and Harry J. Green was issued and assigned to the Harper J. Ransburg Company (later to become the Ransburg Electro-Coating Corporation) of Indianapolis, Indiana. From all of the information contained in this United States Letters Patent No. 2,247,963, the system that was proposed is in many respects identical with the one covered by the Western Electric Company patent of 1928. The major difference lies in the fact that the Ransburg System employs the use of non-conducting walls in the spray booth.

Between the years 1941 and 1951 the Ransburg Electro-Coating Corporation was assigned some 27 of the 62 patents which were included in the group that was studied. Most of these pertained directly to the original spray coating system but some few covered auxiliary items as conveyor systems, over-spray recovery, control of electrostatic fields (*i.e.*, spark preventing apparatus) and even special processes for electrocoating granular materials. Many of the patents in this group, not assigned to the Ransburg Corporation, deal with electrodeposition of granular abrasive materials and flocking materials but some apply also to electrostatic painting and even printing processes.

The over-all picture presented by the study of these patents shows that the patents which have been issued pertain to specific apparatus, *i.e.*, design patents, and that the process of electrocoating, being a fundamental one, cannot be claimed exclusively by any one individual or firm. At this stage the design patents do not appear to be overly restrictive as to their effects on the formulation of different systems.

PLAINTIFF'S EXHIBIT XXXXX

Miller Brothers Co.

4220 Ocean Park Ave. - EXbrook 8-5776 - Venice, California

Date: October 17, 1956

Subject: Ajax Hardware

To: Ransburg Electro-Coating Corp.

Attention: Dr. Emery P. Miller

From: Herman E. Miller

Dear Emery:

You should be receiving in a few days, signed agreements from the subject company, together with their purchase order. You will note that they have added an amendment to the agreement which was intended to substitute for a guarantee from you that the equipment would coat their parts satisfactorily. I explained to them that such a guarantee was impossible and that the best we could do would be to state that the equipment would do the same kind of a job for them as it is doing for American Cabinet Hardware and others. I trust you will find this amendment acceptable. If not, we may be able to jockey it about a bit to suit you.

Very truly yours,

Miller Brothers Co.

Henry

Herman E. Miller

HEM:jl

Air Mail

DEFENDANT'S EXHIBIT NO. 10-A

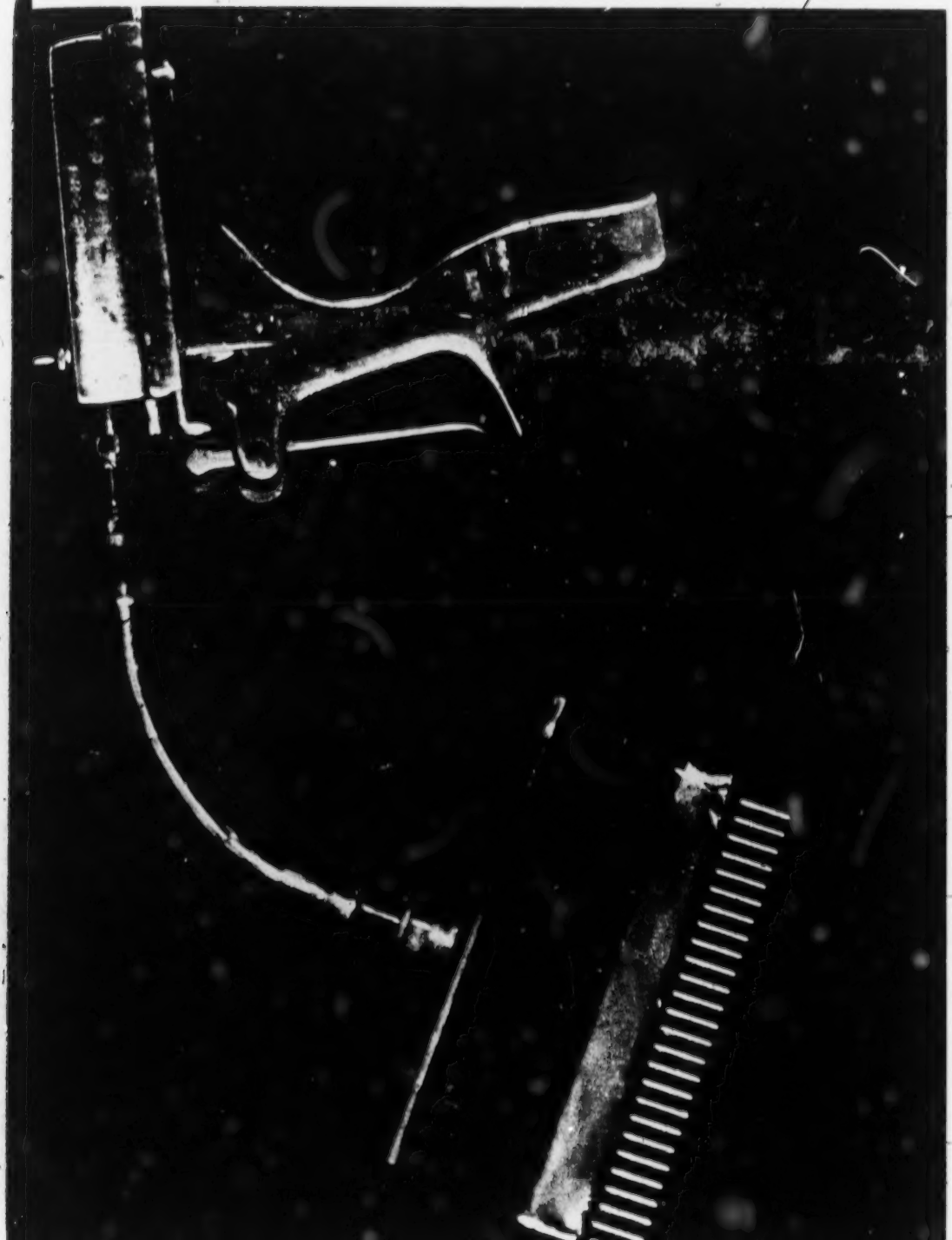

DEFENDANT'S EXHIBIT NO. 10 D

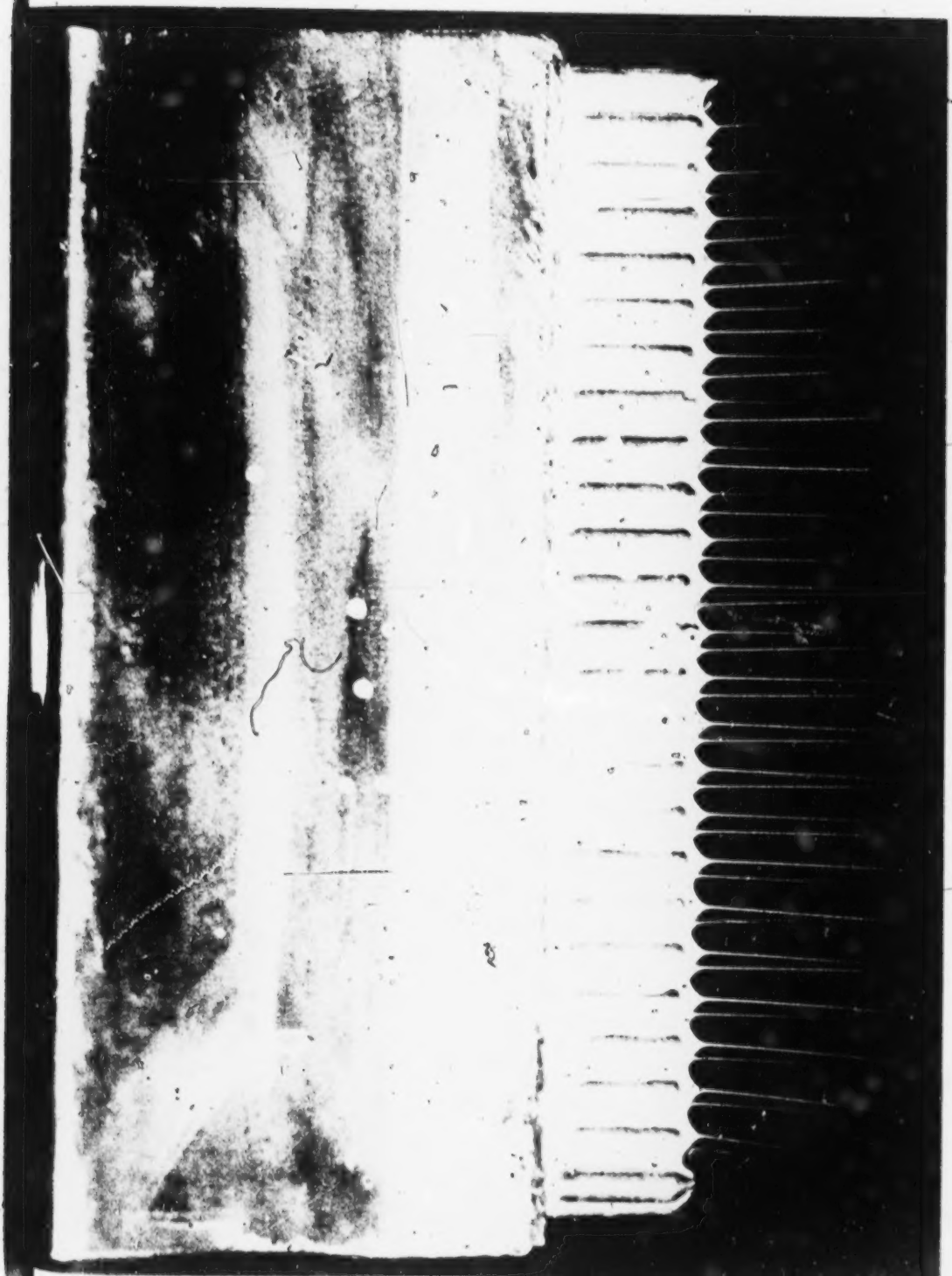

TRIPLE HEAD ATOMIZING UNIT

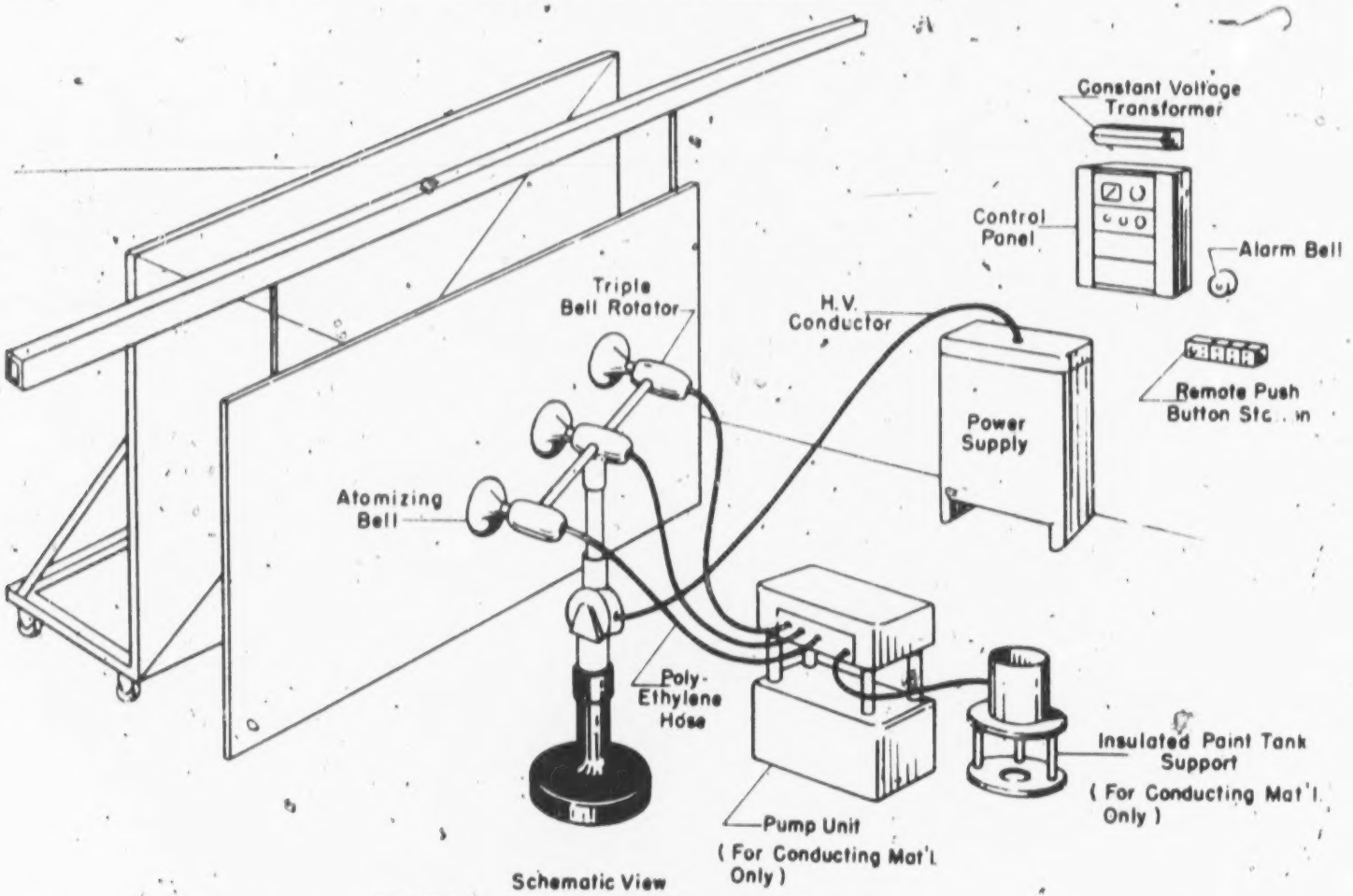

Schematic View

TRIPLE HEAD INSTALLATION
WITH
WALL MOUNTED CONTROLS

DEFENDANT'S EXHIBIT NO. 17-A

DEFENDANT'S EXHIBIT NO. 17-B.

RECIPROCATING DISC ATOMIZING UNIT

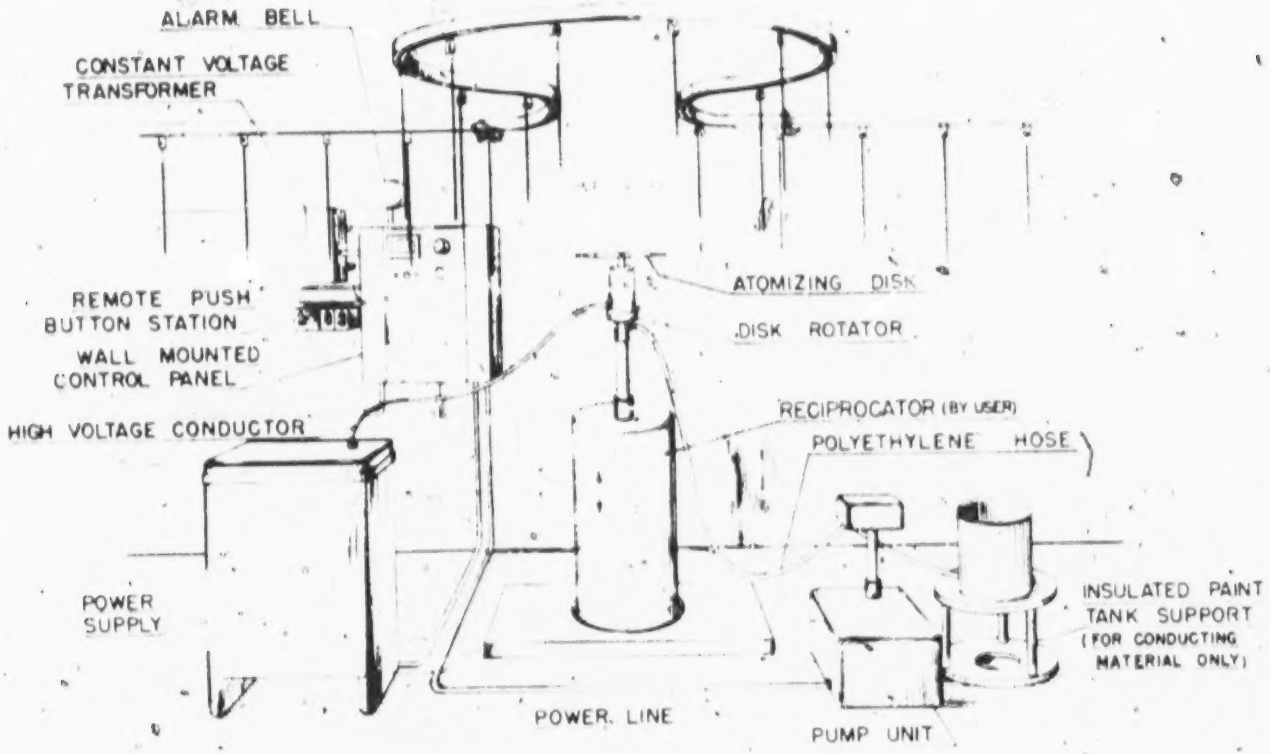

SCHEMATIC VIEW
RECIPROCATING DISK INSTALLATION
WITH
WALL MOUNTED CONTROLS

DEFENDANT'S EXHIBIT NO. 17-C. 9651

TILTING DISC ATOMIZING UNIT

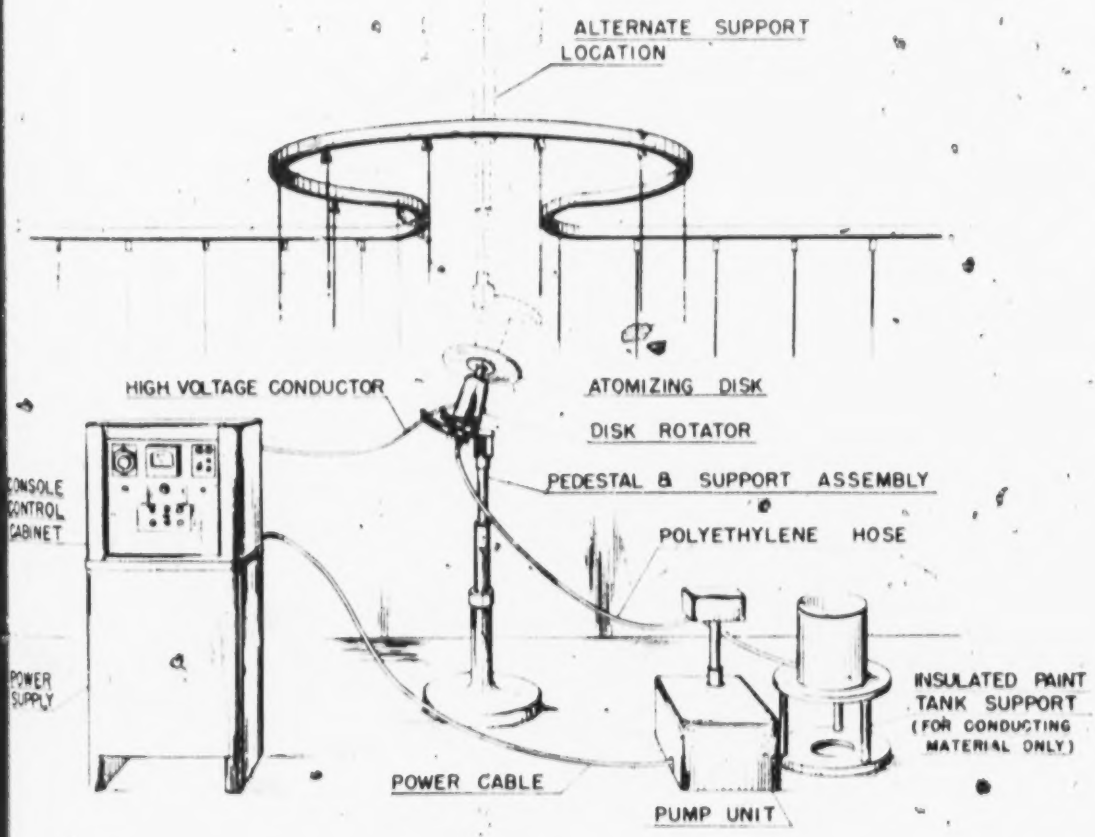

SCHEMATIC VIEW
TILTING DISK INSTALLATION
WITH
CONSOLE TYPE CONTROLS

DEFENDANT'S EXHIBIT NO 18-A

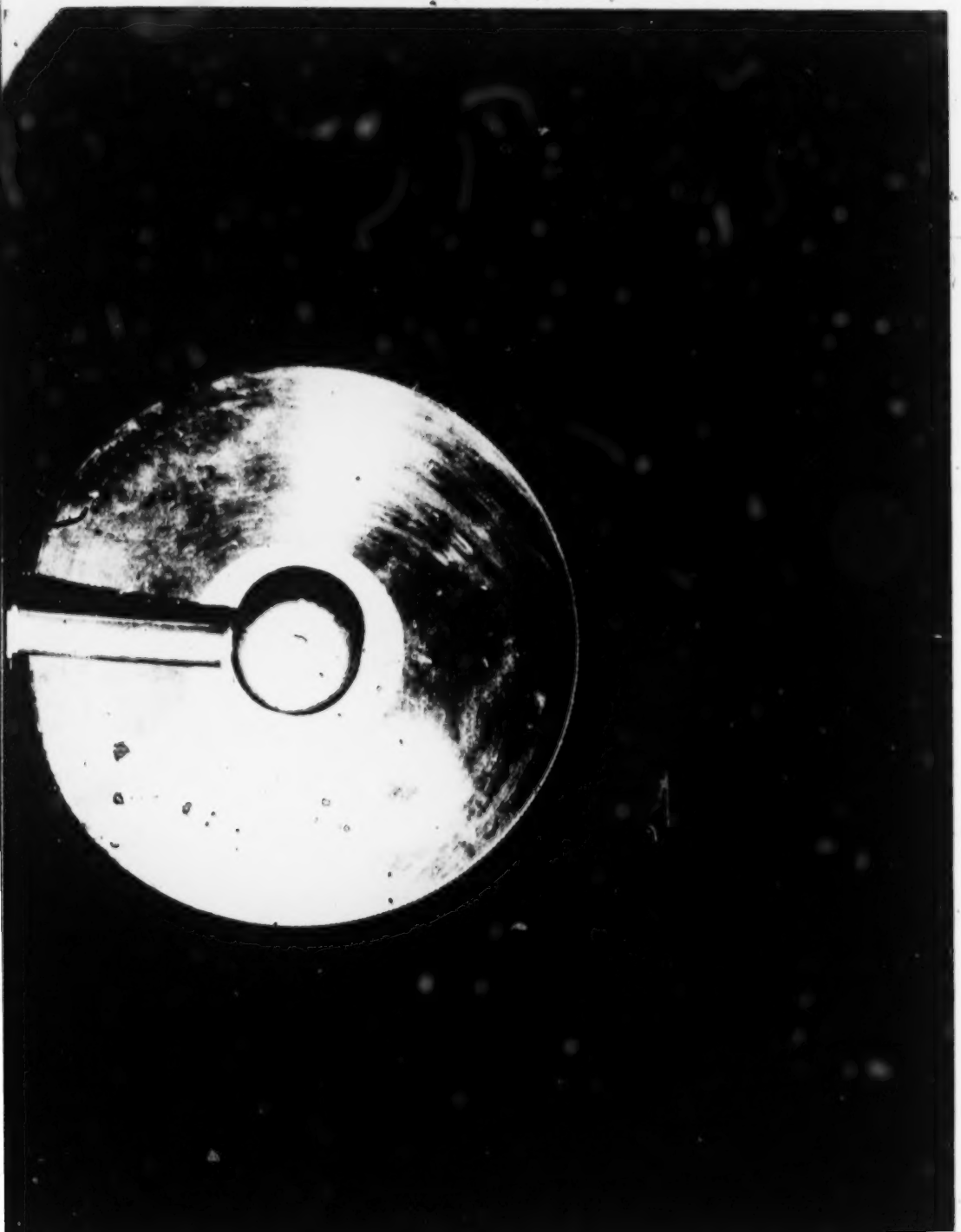

DEFENDANT'S EXHIBIT NO 18 B

DEFENDANT'S EXHIBIT No. 41

October 1, 1958

Avco Manufacturing Corp.
1329 Arrington Street
Cincinnati, Ohio

Attention: Mr. A. D. Redfield, Patent Counsel

Dear Mr. Redfield:

It has recently come to our attention that the first "Whereas" clause in our Agreement No. 5228 with your company for use of our No. 2 Process in the coating of automatic washing machine equipment, as set forth in our letter of January 18, 1954, contains an inadvertent error.

As you will recall, in the conference which preceded the execution of this agreement, you requested that we list in schedules to an amendment of our printed form agreement, as was done in response to your request, to our earlier Agreement Nos. 3463 and 3464 for your use of our No. 1 Process at your Richmond, Indiana plant, all patents and patent rights mentioned in a general way in our discussion including all of those listed for your earlier Agreement Nos. 3463 and 3464 which were existent at the time, whether or not they related in any manner to your use of the No. 2 Process.

Inasmuch as Schedules A and B to Agreement No. 5228 were prepared pursuant to such request, we did not represent, and do not now represent, that all of the patents and patent rights referred to therein pertain to the No. 2 Process, and our printed form "Whereas" clause which was inserted in our letter of January 18, 1954, should have been limited accordingly.

We trust that this letter will serve to clarify the matter.

Very truly yours,

HED:bat Harry E. Downer

Avco Manufacturing Corporation
1529 Arlington Street
Cincinnati 25, Ohio

October 7, 1958

Harry E. Downer, Esq.
Ransburg Electro-Coating Corp.
3939 West 56th Street
Indianapolis, Indiana

Dear Harry:

Your letter of October 1 puzzles me. I have a note in my file indicating that I had insisted, probably at our conference on January 6, 1954, that the first "Whereas" clause specify the patents and applications covering the No. 2 process so as to tie down the term "said process" as used in the agreement to what is described and claimed in the patents. Apparently what was done was to include a general list of all patents you owned in Exhibit A, which was not responsive to my request.

You now state that you did not mean to represent that all these patents applied to the No. 2 process. Assuming this is the case, what patents do you have which *do* actually apply to and are limited to the No. 2 process?

I would like to ask another question, namely, is there any sound basis upon which Ransburg can assert that despite the dismissal of the case against Hamilton in Wisconsin Ransburg has been and is taking diligent steps to police the patents, which would justify its licensees in continuing to make payments under their respective license agreements?

Yours very truly,

Alden

Alden D. Redfield,
General Patent Counsel.

ADR:EL

Mr. Alden D. Redfield October 13, 1958
Avco Manufacturing Corporation
1529 Arlington Streets
Cincinnati 25, Ohio

Dear Alden:

This is in answer to your letter of October 7th. It appears that our understandings of our 1954 conference at this time vary in some respects but in view of the time that has transpired since that conference, this is not surprising. The important point is that I wanted to make clear to you that we do not represent that all of the patents and applications referred to in Exhibits A and B to Agreement No. 5228 do pertain to the No. 2 Process.

The more important patents which do apply to your use of our No. 2 Process under Agreement No. 5228 at your Nashville plant are as follows: 2,685,536; 2,794,417; and 2,839,425. Each of these patents were pending as applications in the Patent Office at the time of our letter amendment dated January 18, 1954 of Agreement No. 5228.

Our suit against Hamilton in Wisconsin was based on two patents that related to methods and apparatus for arranging articles in a particular way. Hamilton used the inventions of these patents in coating articles in a compressed air electrostatic spray coating system and not a system in which the paint was atomized electrostatically. Our No. 2 Process was not involved.

We hope your operations in Nashville with our No. 2 Process are going quite satisfactorily. As you may have known at the time we made that installation for you, several of the largest major appliance manufacturers had already installed our No. 2 Process and I am happy to advise that now most of the major appliance industry is using it.

Yours very truly,

HED:so Harry E. Downer.

UNITED STATES DISTRICT COURT.

(Caption—56-C-262)

FINDINGS OF FACT AND CONCLUSIONS OF LAW.

For a number of years prior to the incorporation of defendant on January 1, 1948, its predecessors were engaged in the manufacture and sale of houseware items. In the year 1937, they commenced experiments in using a paint coating materials on its manufactured products. Up to this time, they used the conventional process of compressed-air guns without an electrostatic field. These experiments resulted in the development of what they called their No. 1 Process for which United States Patent Number 2,247,963 was issued. The validity and infringement of this patent is not in issue. The No. 1 Process called for the spraying of coating material by means of compressed-air spray guns into an electrostatic field which was maintained between wires or electrodes and through which field the grounded conveyorized articles of manufacture passed, so that the atomized paint forced into the field by compressed-air became electrically charged and was urged toward deposition upon the articles by the effect of the field. The No. 1 Process, as compared with the prior conventional process of spraying paint coating, substantially reduced over-spray, paint loss and labor expense, and it was a substantial improvement in many commercial applications. This process was marketed in the year 1944 and was the first commercially used electrostatic spray painting system. The conventional equipment items such as conveyors, ovens and spray guns were not supplied by defendant or its predecessors but were purchased by their licensees from the plaintiff and other suppliers.

The defendant's predecessors continued their research

and development work which resulted in the development of what they called their No. 2 Process and an application for patent was filed on September 29, 1944 for which United States Patent Number 2,685,536 was issued on August 3, 1954. The No. 2 Process made it possible for articles to be coated electrostatically without the necessity of compressed-air spray guns to atomize the coating material. In this process, in substance, the electrostatic field is maintained directly between the atomizing device, or head, and the articles on the conveyor. The liquid coating material is fed at a controlled rate to and distributed along the extended edge of a stationary or rotating atomizing head. The strength of the field at the edge is such that the field is capable of electrostatically atomizing fine, electrically-charged particles from the liquid. The field then disperses those particles in the form of a spray, and deposits them upon grounded articles of manufacture situated on a conveyor moving through and a part of the field. The No. 2 Process, as compared with the No. 1 Process and prior conventional processes of spraying paint coating, in many commercial applications, virtually eliminated over-spray, paint loss, further reduced labor costs, substantially reduced the manufacturer user's investment in spray booths, exhaust systems and related equipment.

While the application for the patent was pending the defendant was incorporated, became the owner thereof, and since has been engaged in the business of marketing systems employing electrostatic forces in the automatic application of paint or other liquid coating to articles of manufacture carried by conveyors. The first license of the No. 2 Process was granted by defendant in the year 1949, under a special consulting and research agreement with Enameled Steel and Sign Company of Chicago, Illinois. General marketing of the system was commenced in the year 1951. Thereafter the patent on the No. 2 Proc-

ess issued on August 3, 1954, as United States Letters Patent Number 2,685,536. Inasmuch as the special paint atomizers and accurately controllable paint supply systems required for operation of the No. 2 Process were not available on the market, defendant designed and produced them and furnished them to licensees as part of the specialized equipment.

The plaintiff has been in business since the year 1892, has branch offices or warehouses in twenty-eight (28) major cities in the United States and Canada. It has and is manufacturing and selling spraying equipment for paint and other materials in the Southern District of Indiana. It sells a line of merchandise under the slogan "Everything for Spray Painting," and is one of the two largest merchandisers of spray painting equipment in the United States. It sells, and for many years has sold, a large volume of compressed-air spray guns, for both manual and automatic operation, and in many instances sells complete finishing facilities as a package, including spray guns, spray booths, paint-collecting devices, exhaust systems, and related equipment. In the year 1958, four years after the issuance of defendant's No. 2 Process patent, the plaintiff added to its advertised line of products electostatic spray painting equipment of the compressed-air type as depicted by defendant's No. 1 Process.

The plaintiff's first knowledge of a method for painting by the use of compressed-air and an electrostatic field was attained in the late 1930's or early 1940's from the No. 1 Process of the defendant's predecessors. In December of 1942, at the invitation of the defendant's predecessors, several of plaintiff's representatives attended a demonstration of the No. 1 Process at Indianapolis, Indiana. Plaintiff's first knowledge of an airless electrostatic painting process was obtained from defendant's No. 2 Process, after it was commercialized. In January of 1951, after dis-

cussions of the subject of electrostatic spray painting, the plaintiff purchased a power pack and carried out experiments in that year in keeping with its knowledge of the market development. Plaintiff then engaged in a broad base research to investigate and develop methods of painting other than those being practiced with its products. Its research was sporadic until April 1, 1952, when it hired for that purpose James H. Rice, who began by reviewing all of the patents in the field. In the year 1952, plaintiff negotiated with the co-patentee of the patents in suit and another former research employee of defendant, with the intent to employ them, but no agreement was reached. During the years 1951 and 1952, plaintiff gave consideration to acquiring the business of a third party which was in business of marketing air-type electrostatic spray coating systems in competition with defendant's No. 1 and 2 Processes, but these negotiations terminated. In the year 1953, plaintiff engaged an independent research organization to improve equipment for the application of paint as a coating which was performed in the years 1953 and 1954. The research culminated in the development of an atomizing head, or emitter, called SK661, a drawing of which was made and dated May 12, 1954. The emitter is intended for use in an airless electrostatic coating system which is the subject of the charge of infringement by defendant's counterclaims. After plaintiff learned of the issuance of defendant's No. 2 Process on August 3, 1954, its research ceased. The plaintiff attempted to market for electrostatic spray painting its SK661 emitter and the equipment related thereto to the Ford Motor Company on January 25, 1956. In response to Ford's request plaintiff unsuccessfully quoted its price with this express provision:

> "This bid shall not be binding upon Binks Manufacturing Company as an offer unless and until Ford Motor Company shall indemnify Binks Manufacturing

> Company and hold it free and harmless against any and all suits or cause of action which may be brought against Binks Manufacturing Company for infringement and/or contributory infringement of Starkey et al. patent 2,685,536 by reason of manufacturing and furnishing Ford Motor Company the devices comprising the subject matter of said bid or by use by Ford Motor Company of said devices."

Thereafter in an exchange of correspondence consisting of eight letters commencing on July 3, 1956, and ending on September 21, 1956, the plaintiff stated it was ready to market a paint sprayer which electrostatically atomized paint without making use of compressed-air spray gun and requested defendant send its standard license form. When defendant sent its No. 2 Process license form without equipment and the alternate license form with equipment, plaintiff sent defendant a print of its SK661 drawing of May 12, 1954, stating that neither form of license was satisfactory, that it was interested in a "license to make and sell equipment for this type of spray painting" under the defendant's No. 2 Process patent; that the license without equipment form was not acceptable because it required continuous periodic payments of royalties based on the extent of the coating material used and that plaintiff's sales practice was such that any license agreements would have to require the payment of only one royalty payment at the time of each sale so that, thereafter plaintiff's customer's use of the equipment would be free of any further royalty payments, and requested defendant consider granting such a license based at a given rate of percentage of the sales price. The defendant responded:

> "* * * Granting licenses on this basis would require a complete change in our marketing policy and a change of all of our licenses now in effect, as otherwise a large part of our licensees would be treated unfairly. We also believe that the system you suggest is not sat-

isfactory for determining the proper value for the use of the process.

"In view of the foregoing we trust you can readily understand why we feel that we cannot comply with your request. We want you to know that licenses are available to your customers for painting with our method and we assume you will not furnish the equipment which has been the subject of this correspondence to such customers unless they are licensed by us."

Twenty (20) days after this exchange of correspondence, the plaintiff commenced its action by the filing of its complaint.

The plaintiff's complaint and amendment thereof sought a declaratory judgment that the defendant's No. 2 Process patent issued August 3, 1954 as United States Letters Patent 2,685,536 entitled "Method for Electrostatically Coating Articles," was invalid, and alleged misuse, violations of the anti-trust law and unfair competition by defendant. Upon the filing of defendant's counterclaim, the plaintiff filed its cross-counterclaim and voluntarily dismissed its amended complaint since the question of justicable controversy had been rendered moot by the defendant's counterclaim which was in the form of a conventional patent infringement action. Thereafter, and while the action was pending, on June 4, 1957, United States Letters Patent 2,794,417 issued to the defendant, and was entitled "Apparatus for Electrostatically Coating Articles." The apparatus patent applied for on June 4, 1954 upon which the apparatus patent 2,794,417 issued, was a division of the application of September 29, 1944, on which the method patent 2,685,536 issued. The apparatus patent was then also made a subject of the litigation by the defendant's filing of its supplemental counterclaim and plaintiff's filing of its supplemental cross-counterclaim.

The pleadings having been consolidated by substitution the case was tried upon the issues presented by:

Defendant's substituted counterclaim, seeking injunction and damages on account of alleged infringement by plaintiff of defendant's United States Patent 2,685,536 and plaintiff's substituted answer of three defenses, denial of infringement, invalidity of the method patent and misuse of the patent;

Defendant's substituted supplemental counterclaim seeking injunction and damages on account of alleged infringement by plaintiff of defendant's United States Patent 2,794,417 and plaintiff's substituted answer of five defenses, denial of infringement of the apparatus patent, invalidity of the apparatus patent, two defenses of estoppel to assert the apparatus patent, misuse of the apparatus patent; and

Plaintiff's substituted cross-counterclaim, seeking an injunction, threefold damages and an accounting for alleged violation of the anti-trust laws and unfair competition by defendant and defendant's substituted answer of two defenses, denying the alleged violation of the anti-trust laws and unfair competition and pleading the two-year statute of limitations with respect to plaintiff's claim for threefold damages under Section 15, Title 15, U.S.C.

Patent 2,685,536 in suit is directed to methods of electrostatically spray-painting without the use of compressed air. It contains eleven claims, all of which, with the exception of claims seven and nine, are asserted by defendant to have been infringed by plaintiff. Claims one, two and ten have been treated as typical.

Patent 2,794,417 in suit is directed to forms of apparatus for use in practicing the method of the other patent 2,685,536. It contains four claims, but only claim four is relied upon by defendant as having been infringed by plaintiff.

Typical of this class of cases, the issues are multiple and the evidence and briefs are voluminous.

The evidence of both parties consisted of exhibits, rec-

ords, written evidence, admissions, stipulations, interrogatories and depositions. The plaintiff offered no testimony of witnesses in the presence of the Court at the trial. The defendant in addition offered testimony of witnesses in the presence of the Court at the trial who were vigorously cross-examined.

Findings of Fact.

1. Defendant, Ransburg Electro-Coating Corp., is a corporation organized and existing under the laws of the State of Indiana and has its principal offices and place of business at Barth and Sanders Streets, Indianapolis 7, Indiana.

2. The plaintiff, Binks Manufacturing Company, is a corporation organized and existing under the laws of the State of Delaware and has its principal office and place of business at 3114-40 West Carroll Avenue, Chicago 12, Illinois.

3. The action of the defendant arises under the patent laws of the United States, 35 U.S.C., Section 271, 281, et seq.

4. The amount involved in the controversy presented by plaintiff's cross-counterclaim is in excess of Three Thousand ($3,000.00) Dollars, exclusive of interest and costs and its action arises under the anti-trust and anti-monopoly laws of the United States, 15 U.S.C., Section 1, 2, 14 and 15.

Defendant's Development of Electrostatic Spray-Painting Methods and Apparatus.

5. On August 3, 1954, the defendant was issued United States Letters Patent Number 2,685,536, entitled "Method for Electrostatically Coating Articles," on an application for patent filed on September 29, 1944, in the names of William A. Starkey and Edwin M. Ransburg, which patent

is owned by defendant. On June 4, 1957, the defendant was issued United States Letters Patent Number 2,794,417, entitled "Apparatus for Electrostatically Coating Articles" on an application filed June 4, 1954, based upon the aforesaid application filed September 29, 1944, in the names of William A. Starkey and Edwin M. Ransburg, which patent is owned by defendant. The above patents, which relate to the No. 2 Process, are those in suit. The application of June 4, 1954, upon which patent 2,794,417 issued, was a division of the application of September 29, 1944, on which patent 2,685,536 issued.

6. The defendant, since its incorporation on January 1, 1948, has been engaged in the business of marketing systems employing electrostatic forces in the automatic application of paint or other liquid coating to articles of manufacture carried by conveyors. The two coating systems which it markets are:

(a) The "No. 1 Process," first developed, in which paint sprayed from essentially conventional compressed air spray guns is electrostatically deposited on the articles; and

(b) The "No. 2 Process," later developed, in which paint atomized under the influence of electrostatic forces without the use of compressed air is electrostatically deposited on the article.

In addition to its coating systems, defendant markets a "detearing" system, in which electrostatic forces are used to remove the "tears" of excess paint which accumulate on the lower edges of articles previously coated by dipping or flow-coating.

7. Defendant's present business had its origin in an individual proprietorship, operated by Harper J. Ransburg, a resident of Indianapolis, Indiana, who was engaged in the manufacture and sale of a variety of housewares items, such as canister sets, bread boxes and similar

accessories. He was assisted in this business by his three sons, Gegg, Harold and Edwin, and in 1941 they formed a partnership, the Harper J. Ransburg Co., which continued to make and sell housewares, but which also commenced the marketing of the detearing process and the No. 1 Process. As of January 1, 1948, with the incorporation of the defendant, the two businesses were separated, the defendant corporation taking over the business of marketing the coating and detearing systems. Defendant is owned by the four Ransburgs, who are its officers and directors.

8. Prior to the development of the Ransburg No. 1 Process, defendant's predecessor had painted many of its products by a widely used system in which a spray of paint formed by and projected from a conventional compressed-air spray gun was directed toward the articles to be painted. Such systems still are widely used in industry. However, when coating is done by means of compressed-air spray guns, much of the material sprayed is not deposited upon the article, but is carried beyond it by the air blast and is lost as "overspray"; and a substantial investment and expense is necessary in installing, maintaining, and operating spray booths, paint collecting devices, and exhaust systems. The Ransburg electrostatic coating systems were devised to reduce the cost of coating by the spray method.

9. Commencing in about 1937 the Ransburgs conducted experiments in using a high-voltage electrostatic field to deposit more efficiently upon articles of manufacture coating material atomized by conventional compressed-air spray guns. As the result of this work, they developed their "No. 1 Process," in which the coating material is sprayed by means of compressed-air spray guns into an electrostatic field which is maintained between wires or electrodes and the conveyorized articles of manufacture, so that the

paint particles are electrically charged and urged toward deposition upon the articles by the effect of the field. This process substantially reduced over-spray loss and labor expense, and in many commercial applications was a substantial improvement over conventional non-electrostatic painting methods. In 1944 the partnership commenced marketing the No. 1 Process, which was the first commercially used electrostatic spray painting system.

10. The equipment required by a user of the No. 1 Process includes, in addition to such conventional items as conveyors and ovens (none of which has at any time been supplied by defendant), a voltage source, or power pack, capable of an output in the order of 90,000 volts. At the time when the partnership was ready to license others to use the process, none of the power packs available on the market was deemed by it to be sufficiently safe for use in the process, nor were any suitable combined electrical and paint supply controls available. Because of the unavailability of these items on the market, the partnership designed and produced a safer power pack and suitable combined controls, so as to be in position to interest prospective licensees in the process. The agreement licensing the user to use the process provided that Ransburg would furnish on essentially a lease basis the specialized power pack, controls, electrodes, insulating electrode supports, and high-voltage lead-in means. The necessary spray guns and other conventional equipment were not supplied by Ransburg, but were purchased by the licensees from plaintiff and other suppliers.

11. While the No. 1 Process was a definite improvement over non-electrostatic air spray coating, considerable loss of coating material persisted in many applications because the electrostatic field only partially counteracted the tendency of the compressed-air blast to carry much of the material elsewhere than upon the articles being coated.

The Ransburg partnership continued its research and development work, and as a result thereof developed its No. 2 Process, by which articles could be coated electrostatically without the necessity of compressed-air spray guns to atomize the material. In this process, in substance, the electrostatic field is maintained directly between the atomizing device, or head, and the articles on the conveyor. The coating material is fed at a controlled rate to and distributed along the extended edge of a stationary or rotating atomizing head. The strength of the field at the edge is such that the field is capable of electrostatically atomizing fine, electrically-charged particles from the liquid. The field then disperses those particles in the form of a spray, and deposits them upon the articles of manufacture. This process, in many applications, virtually eliminates over-spray, and thus paint loss, further reduces labor costs, and substantially reduces the manufacturer's investment in spray booths, exhaust systems, and related equipment. The first license of the No. 2 Process was granted by defendant in 1949, under a special consulting and research agreement with Enameled Steel and Sign Company of Chicago, Illinois. General marketing of the system was commenced in 1951. Inasmuch as the special paint atomizers and accurately controllable paint supply systems required for operation of the No. 2 Process were not available on the market, defendant designed and produced them and furnished them to licensees as part of the specialized equipment.

Plaintiff's Activity in the Art Field of Electrostatic Spray-Painting.

12. The plaintiff has for many years and is presently manufacturing and selling spraying equipment for paint and other materials in this District and elsewhere in the United States. With its predecessors, it has been in busi-

ness since 1892, has branch offices or warehouses in twenty-eight major cities in the United States and Canada, sells a line of merchandise under the slogan "Everything for Spray Painting," and is one of the two largest merchandisers of spray-painting equipment in the United States. It sells, and for many years has sold, a large volume of compressed-air spray guns, for both manual and automatic operation, and in many instances sells complete finishing facilities as a package, including spray guns, spray booths, paint-collecting devices, exhaust systems, and related equipment. In 1958 it added to its advertised line of products electrostatic spray-painting equipment of the compressed-air spray type.

13. Plaintiff's first knowledge of a method for painting by the use of compressed-air and an electrostatic field was attained in the late 1930's or early 1940's from knowledge of the system developed by defendant's predecessor, and in December, 1942, at the invitation of the latter, several of plaintiff's representatives attended a demonstration of the Ransburg air-type No. 1 electrostatic coating system at Indianapolis, Indiana. Plaintiff's first knowledge of an airless electrostatic painting process was obtained from defendant's No. 2 system, after it was commercialized.

14. After discussions of the subject of electrostatic spray painting, plaintiff purchased a power pack in January, 1951, and its personnel first carried out experiments in that year. Its research was sporadic until April, 1952, when it hired for that purpose James H. Rice, who began by reviewing all of the patents in the field. Also in 1952 it negotiated with William A. Starkey, a co-patentee of the patents in suit, and Harry Green, former research employee of defendant, with a view of employing them, but no agreement was reached. During 1951 and 1952 plaintiff gave consideration to acquiring the business of Ashdee Electrostatic Products, Inc., which was in the business of

marketing air-type electrostatic spray coating systems in competition with the defendant's No. 1 and No. 2 systems, but the negotiations were terminated. In 1953 plaintiff retained Midwest Research Institute, of Kansas City, Missouri, to do research for it on electrostatic spray-painting and to develop a new or improved spraying technique; such research was performed in 1953 and 1954.

15. Plaintiff's efforts culminated in the development of an atomizing head or emitter, designated SK661, a drawing of which was made and dated on May 12, 1954. This emitter is intended for use in an airless electrostatic coating system which is the subject of the charge of infringement in defendant's counterclaims.

16. After plaintiff learned of the issuance of defendant's Starkey method patent, No. 2,685,536, which was issued on August 3, 1954, its work in the field of airless electrostatic spray-painting became dormant until the negotiations with Ford Motor Company which are hereinafter referred to.

17. The only equipment which plaintiff has attempted to market for airless electrostatic spray-painting is its SK661 emitter and the equipment related thereto, and the only prospective vendee to which plaintiff has attempted to sell such equipment is the Ford Motor Company. In response to a request by Ford, plaintiff on January 25, 1956, quoted its price upon such equipment with the express proviso:

> "This bid shall not be binding upon Binks Manufacturing Company as an offer unless and until Ford Motor Company shall indemnify Binks Manufacturing Company and hold it free and harmless against any and all suits or causes of action which may be brought against Binks Manufacturing Co. for infringement and/or contributory infringement of Starkey et al. patent 2,685,536 by reason of manufacturing and fur-

quishing to Ford Motor Company the devices comprising the subject matter of said bid or by use by Ford Motor Company of said devices."

Ford did not purchase the equipment.

18. In July, 1956, plaintiff initiated correspondence with defendant, stating that it was "ready to market a paint sprayer which electrostatically atomizes the paint without making use of air," and asking that defendant send its standard license form. When defendant submitted its standard No. 2 Process license forms 439 (with equipment) and 440 (without equipment), plaintiff sent defendant a print of its SK661 drawing of May 12, 1954, said that neither form would be satisfactory, and stated that it was interested in "a license to make and sell equipment for this type of spray painting under your Starkey patent" No. 2,685,536. Plaintiff further advised defendant that form 440 was not acceptable to plaintiff because it required "continuous periodic payments of royalties based on the extent of the coating material used," and that plaintiff's sales practice was "such that any license agreements that we might enter into would have to require the payment of only one royalty at the time of each sale so that thereafter the customer's use of the equipment would be free of any further royalty payments," and asked that defendant consider "granting a license requiring, in the instance of each sale of spray equipment, only a single royalty payment at a given rate of percentage of the sales price." In reply defendant stated in its letter of September 21, 1956:

> "* * * Granting licenses on this basis would require a complete change in our marketing policy and a change of all our licenses now in effect, as otherwise a large part of our licensees would be treated unfairly. We also believe that the system you suggest is not satisfactory for determining the proper value for the use of the process.

"In view of the foregoing we trust you can readily understand why we feel that we cannot comply with your request. We want you to know that licenses are available to your customers for painting with our method and we assume you will not furnish the equipment which has been the subject of this correspondence to such customers unless they are licensed by us."

Thereafter, on October 11, 1956, plaintiff filed the complaint in this cause, seeking a declaratory judgment that the Starkey process patent was invalid and alleging misuse of the patent, anti-trust law violations, and unfair competition by defendant.

Nature of the Patents in Issue and Their Position in the Art.

19. In the No. 1 Process, which defendant's predecessor had developed in the late 1930's, articles to be spray-painted were conveyed past an electrode. The articles were grounded, while an electrical potential on the order of 90,000 volts was applied to the electrode to create an electrostatic field between it and the articles moving past it. A paint spray formed outside that field by conventional compressed-air spray guns was directed into the field with the result that the sprayed particles acquired electrical charges which caused them to be attracted to the articles. While this system reduced losses of paint as compared with the older non-electrostatic spray-painting systems, the air employed to form the spray and project it into the field had to escape from the coating zone and carried away with a substantial portion of the paint sprayed. Spray booths and other equipment were still necessary to handle the paint escaping as overspray from the coating zone. Even with the benefit of electrostatic forces, paint losses in this method of spray painting may amount to as much as about one-third of the paint sprayed.

20. The systems illustrated in the patents in suit eliminated the air streams which caused substantial paint losses even in the No. 1 Process. In each of such systems, the paint is supplied to and oozes at a controlled rate from the inside to the outside of an atomizer which is maintained at an electrical potential corresponding to that impressed on the electrode in the above-described No. 1 system: The articles to be coated are conveyed past atomizer and maintained at ground potential to create an electrostatic field between them and the paint fed from the interior of the atomizer. Such paint is atomized electrostatically into a spray of finely-divided, electrically-charged particles which are electrostatically deposited on the articles. These systems, which exemplify the "No. 2 Process," employ no air for atomizing the paint or forming the spray, reduce paint losses to 1% or 2% of the paint sprayed, and can be practiced in the open shop without the necessity for expensive paint exhaust and overspray recovery equipment.

21. All forms of atomizers shown in the two patents in suit provided for electrostatic atomization of the paint at individual points of a series of points disposed in a row. In the form of atomizer shown in Figs. 5 and 6 of the patents in suit, the paint oozes through orifices in the head and forms a continuous film which is supported by a row of needles projecting downwardly from the head and which bridges the spaces between the spaced points where the atomization occurs.

22. Patent 2,685,536 in suit is directed to methods of electrostatically spray painting without the use of air. It contains eleven claims, all of which, with the exception of Claims 7 and 9, are asserted by defendant to have been infringed by plaintiff. Claims 1, 2, and 10 have been treated as typical.

23. Patent 2,794,417 in suit is directed to forms of ap-

paratus for use in practicing the method of the other patent. It contains four claims, but only Claim 4 is relied upon by defendant as having been infringed by plaintiff.

24. The original application Serial No. 556,390 filed September 29, 1944, which resulted directly in patent No. 2,685,536 and indirectly in patent No. 2,794,417, had extended prosecution and careful consideration at the hands of the Examiner and Board of Appeals of the Patent Office. A total of 22 references were cited against it, and it was twice considered by the Patent Office Board of Appeals before being allowed. Included in the prior art cited against it were references showing the electrostatic deposition of paint and other particles suspended in air streams and at least one reference showing the electrostatic atomization of liquids.

25. Any spray-painting operation requires that the paint be atomized at an adequate rate, that the atomized particles be formed into a spray of suitable shape and size, and that the spray particles be small enough to avoid creating a rough finish and large enough that their volatile constituents will not evaporate to such an extent that the deposited particles are too dry. The method of patent 2,685,536 in suit meets those requirements and has been widely used in industry to paint a variety of types of articles including automobile chassis and shock absorbers, light fixtures, furniture frames, and cabinets for domestic refrigerators and laundry appliances.

Prior Art.

26. The prior art relied on by the plaintiff does not contain anything constituting a complete anticipation of any of the claims in suit. Every prior art apparatus or method lacks one or more of the features required by each such claim.

27. The prior art may show apparatus with which the

method described by the claims of patent 2,685,536 in suit could be practiced and may further show that some features of that method were separately old; but the prior art fails to suggest to one skilled in the art any use of old apparatus to practice the method claimed or to suggest that individually old method steps could be combined to produce a practicable usable paint spraying method wherein a single electrostatic field maintained between an atomizer and an article to be coated would atomize paint into fine particles, disperse those particles and form them into a well-defined spray, and deposit the spray-particles electrostatically on the article.

28. Among the separately old features of patent 2,685,536 is electrostatic atomization, which is disclosed in Darrah patent 1,958,406 (1934), in the Zeleny articles published at various times from 1914 to 1935, in the Proceedings of the Royal Irish Academy (Vol. XXXIX, 1929), and in the London, Edinburgh & Dublin Philosophical Magazine (Vol. 23, 1887). None of this prior art suggests that electrostatic forces would atomize liquids like paints and enamels or that, if such atomization was possible, the atomized particles would be formed into a spray of the type required in painting operations. Although electrostatic atomization was known for over half a century, it is not shown to have been put to any practical use prior to the inventions of the patents in suit.

29. Instead of suggesting the applicability of electrostatic atomization in spray painting, the prior art gives many indications that it would be unsuitable for that use. Among such indications are:

a. The indication in the 1915 Zeleny article (p. 75) that deposition of the atomized liquid on the oppositely charged electrode occurred only "after * * * some time."

b. At the highest rate of atomization mentioned in the prior art, about six to eight weeks of continuous operation would be required to atomize one pint of liquid.

c. The statement in the 1914 Zeleny article (p. 72) that in electrostatic atomization "the choice of liquid * * * is confined to such liquids as do not leave a residue on evaporation." Any paint, enamel or other permanent coating is such a residue.

d. The statement in the Darrah patent that electrostatic atomization "produced particles of liquid so small that they appear to remain suspended indefinitely in air."

30. None of the prior art is any more pertinent in respect to electrostatic atomization than the Darrah patent 1,958,406 which was cited by the Patent Office against the application that resulted in method patent 2,685,536 in suit. Darrah surrounded one or more capillary nozzles with a ring-like electrode and created between that ring and the liquid in the nozzles an electrostatic field which atomized the liquid as "an exceedingly fine spray." So far as the patent indicates, such spray was projected forwardly beyond the ring electrode and there was no electrostatic field promoting the deposition of the spray so projected on any article to be coated. Darrah, an inventor, a graduate Electrical Engineer with many years experience, and a registered patent agent who has prosecuted over 100 United States patents, experimented with electrostatic atomization for some time, but abandoned his work when he was unable to conceive of any practical use for the phenomenon.

31. No prior art discloses atomization from a plurality of points so closely spaced as to form a substantially continuous atomizing zone, as taught and claimed in the patents in suit. One reference, Darrah, does show atomization at a plurality of points, but the distance between his points

was greater than their distance from the oppositely-charged ring electrode, and hence well outside the close point-spacing contemplated by claims in suit.

32. In the prior art disclosure of electrostatic atomization or anything approaching it, the liquid was either contained in an open dish or fed through capillary tubes, and no means was provided to feed the liquid to the atomizing site at a controlled rate, as required by all the claims in suit and as is necessary in any practical painting operation.

33. In prior art electrostatic atomization, the atomization was carried out either at a single point or at a plurality of points so widely spaced that the distance between them was greater than the greatest distance between any of them and the oppositely-charged electrode. The resultant concentration of lines of force at each point of atomization provided the greatest possible field intensity. The patentees of the patents in suit discovered that the lower field strength existing with the closely-spaced points of atomization disclosed in the patents in suit would atomize liquid coating materials at commercially usable rates.

34. Electrostatic deposition of paint and other coating materials is shown in such prior art as the Pugh patent 1,855,869 and Ransburg, et al. patent 2,247,963. In all such art, the coating material was atomized or comminuted by mechanical means (compressed-air spray guns in the case of liquid coating materials), suspended in an air stream and carried by that air stream into the electrostatic field which urged it toward deposition on the work. No electrostatic atomization occurred in such systems, and the air used to atomize and or carry the coating materials into the field had to escape therefrom and carried much of the coating material with it.

35. The Littlefield patents 1,360,654 and 1,854,475 disclose devices intended to produce a spray of electrically-

charged liquid particles. Each device embodies a spray nozzle having orifices through which liquid is forced to form a spray and, in association with such nozzle, an electrode between which and the nozzle a difference of electrical potential was maintained. Such field as existed was in the vicinity of the orifices. The statements by Littlefield to the effect that an electrostatic field can form into a spray a jet of fluid discharged into it is not supported by a teaching of any means for securing that effect and, in any event, is no more significant than the Darrah disclosure.

36. The Gravley patent 2,359,476 discloses a "detearing" or "decoating" method and apparatus used to remove excess paint or the like from an article which has been treated, as by dipping, with such an excess. The paint collecting as "tears" on such an article under the influence of gravity is drawn from the article by electrostatic attraction to a charged grid, which is a part of the apparatus. Gravley's statement that the material may leave the article as large drops, small drops, or even in a practically atomized state does not suggest the subject matter set forth in the claims of the patents in suit. Gravley does not supply liquid at a controlled rate to an atomizing site; and his mention of the production of large and small drops, which are objectionable in spray painting, teaches that electrostatic forces are not suitable for the use to which they were put by the patentees of the patents in suit. Gravley was thoroughly considered by the Patent Office in the prosecution of the method patent in suit, but was discarded.

37. Heis patent 1,475,995 deals with a method and apparatus wherein gaseous substances are passed through an electrostatic field to promote chemical reactions, and the patent is, therefore, in a remote art. This reference does not disclose an atomizer and would not suggest to one skilled in the art of spray painting that anything it discloses would be useful in the spray painting of articles.

38. The Winternute patent 2,221,338 discloses a system in which "finely divided material such as rayon flock" or "self-adhesive materials such as wax" are fed into an air stream which impinges perpendicularly upon a sheet that is to be coated. An electrode is mounted on the nozzle through which the air stream discharges and the particled material is "prevented from leaving the zone of deposition with the current of air passing off laterally by the curtain of corona discharge." The patent does not disclose or suggest the subject matter of any of the claims in suit.

39. The publication "Electrical Experiments, Francis, 5th Edition" discloses that electrostatic forces can be used to spin threads from molten sealing wax. It is in no way pertinent to the patents in suit.

40. Method patent 2,685,536 in suit is for a broad, basic invention fundamentally different from any previous spray-coating process of record here. The subject matter defined by each of its claims 1 to 6, 8, 10 and 11 in suit, is novel and involves invention over anything disclosed in the prior art.

41. Claim 4 of apparatus patent 2,794,417 in suit describes electrostatic spray coating apparatus wherein there is maintained between an atomizer and the work an electrostatic field capable of atomizing the liquid-coating material and depositing the atomized particles on the work. An important feature of the claim is means for distributing the unatomized coating material to a plurality of points of atomization so close together that the liquid bridges the spaces between them. Such a feature, which promotes uniformity in the distribution of liquid to the several points where atomization takes place, is inherent in Figs. 5 and 6 of the patents in suit, is novel, and involves invention over the prior art.

42. The subject matter defined by the claims of the

patents in suit has filled a long-felt want, and methods and apparatus embodying such subject matter have found wide use in industry. Hundreds of companies, including some of the largest in the country, have paid the defendant substantial fees for the right to use such subject matter. While the specific atomizers used in defendant's commercial spray coating systems differ in detail from the specific atomizers shown in the patents in suit, the commercial systems all embody the fundamental concepts to which the claims in suit are directed, and the commercial success the systems have enjoyed is to be credited basically to the inventions those claims describe.

Other Issues of Validity.

43. The specification of each of the patents in suit contains a description of the invention adequate to enable it to be practiced by those skilled in the art of spray painting, particularly electrostatic spray painting. While the specifications do not expressly set forth such factors as type or grade of paint, voltage, rate of paint feed, distance between the work and the electrode (atomizer), and rate of conveyor movement, the disclosure is operable when such factors are made comparable to those used in prior electrostatic spray coating systems.

44. The Starkey and Ransburg patents in suit are for inventions different from and antedating that of Ransburg patent 2,658,009. The latter patent is directed and limited to a methods and apparatus employing an auxiliary electrode to shape a spray such as is produced in practicing the invention of the patents in suit.

45. The two patents in suit are for inventions different from each other. While the contemplated operation of apparatus patent 2,794,417 inherently involves the method claimed in patent 2,685,536, that method can be practiced

by forms of apparatus outside the scope of claim 4 of patent 2,794,417.

46. The claims of the patents in suit are amply supported by the common specification of those patents, are neither deceptive nor misleading in character, and are not broader than the disclosure.

47. The claims of both patents in suit are directed to inventions made by the joint patentees and not by others.

48. The claims in suit are not drawn to mere aggregations of old process steps or apparatus elements, but to combinations in which the recited process steps or apparatus elements cooperate with each other to the attainment of a common purpose.

49. Although application 536,390 from which both patents in suit resulted, was not filed until September 29, 1944, the patentees had, in 1943, built and operated airless electrostatic spray painting apparatus embodying an atomizing head substantially like that shown in Figs. 1 and 2 of the patents.

50. Defendant had knowledge of all prior art asserted by plaintiff in its second defense prior to the issuance of patent 2,794,417, some of which was referenced by the United States Patent Office in patent 2,794,417 and the method patent in issue of which it is a division, and none of the alleged prior art anticipated the claims of patent 2,794,417. Defendant made no misrepresentations and did not withhold knowledge from or to the United States Patent Office of any prior art anticipating one or more claims of the application which issued as patent 2,794,417. The inventive concepts of method and apparatus patents in issue as pointed out in these findings and in the opinion are not precisely identical. The defendant pursuant to its option of covering them in separate patents or in a single patent elected to voluntarily cancel the claims and application for the apparatus patent in patent 2,685,536. The

defendant also voluntarily cancelled certain of the claims of its application which thereafter resulted in apparatus patent 2,794,417.

51. In finding 18 reference is made to certain correspondence between plaintiff and defendant which has been made the subject of plaintiff's fifth defense of its substituted answer to defendant's substituted supplemental complaint and concerns only the defendant's apparatus patent in issue.

The file history of this patent discloses that the Examiner of the United States Patent Office on January 17, 1956 made a final rejection of certain claims of the application over Formhals patent 2,187,306 in his paper No. 9. Thereafter another firm of attorneys in Chicago, Illinois, were requested by defendant to look over the file to determine whether or not all the claims the applicant was entitled to were allowed. One of the members of the firm was assigned the task and he took the file to his home on the holiday of July 4, 1956, and he determined from such study that defendant was entitled to another claim and drafted one in longhand.

On July 3, 1956, the plaintiff sent the first letter referred to in finding 18 to defendant at Indianapolis which is quoted as follows:

"Gentlemen:

> We have fully developed and are ready to market a paint sprayer which electrostatically atomizes the paint without making use of air. Since we understand from the trade you have a standard form of patent license, we would appreciate your sending us a copy if your licensed patent is applicable to such a sprayer.
>
> Awaiting your reply, we are
>
> Very truly yours,
>
> John W. Baur,
>
> *Chief Engineer, Std. Equipment.*"

On July 5, 1956, the attorney had an office conference with his partner and other patent attorneys of defendant at which a claim was drafted from that of July 4, 1956 and he was authorized to go to the United States Patents Office to interview the hearing Examiner.

The file history discloses that on July 13, 1956, the defendant prepared and filed on July 16, 1956 its appeal to the Board of Appeals such final rejection by the principal Examiner.

On July 24, 1956, the attorney was in Washington and consulted with the hearing Examiner at which time the attorney drafted a claim which included the expression: "sufficiently close to permit the coating material to bridge the spaces therebetween."

On July 25, 1956, another one of the defendant's letters referred to in finding 18 was sent to plaintiff at Indianapolis and contained an enclosure, a print of its emitter.

On August 8, 1956, the attorney had a meeting with defendant's other patent attorneys in Indianapolis at which he submitted the claim draft of the Washington meeting with the hearing Examiner and after some other non-relevant changes was authorized by defendant to prepare and file such as an amendment to the application for the apparatus patent in issue.

The file history discloses that on August 21, 1956, the attorney prepared and on August 23, 1956 filed with the United States Patent Office Amendment "C" to the pending application containing among other amendments a claim and an addition to the specification the same expression developed in the draft of the claim in Washington on July 24, 1956. In the remarks accompanying the amendment it is recited:

"Remarks:

Applicants' attorney desires to express his appreciation for the courtesies extended to him at the recent interview with the Examiner in charge of the application.

At the interview, the final rejection of the claims on the grounds stated in paper No. 9 were discussed at some length and a new claim (here submitted as claim 18) was also discussed.

It was pointed out that one of the features of the suggested new claim is the provision of feeding means which distribute coating material to an extended atomizing zone from which zone it is atomized from a plurality of spaced points with the points being so close together as to permit the coating material to bridge the spaces therebetween. Such, of course, is not the system of Formhals, as, regardless of the spacing of his nozzles, the coating material being contained within the nozzle could not bridge the space therebetween. Serial No. 434,366 • • •

It was suggested by the Examiner that the obviously inherent bridging of the coating material at least in the apparatus illustrated in Figures 5 and 6 be pointed out in the specification and accordingly the specification has been amended to do so.

The unallowed claims remaining in the application are proposed to be cancelled with this amendment and it was believed at the interview that an action of this nature by applicants would place the case in condition for allowance.

Therefore, withdrawal of the final rejection, entry of the present amendment, and reconsideration and allowance of the application as now presented are respectfully requested."

Amendment "C" was accepted by the Patent Office and the patent thereafter issued on June 4, 1957 with Claim 4, being Amendment "C."

The attorney, responsible for the drafting of Claim 4 and whose language and expression it was, had never seen the correspondence and the emitter print of the plaintiff's referred to in finding 18 on or before July 24, 1956 and none of defendant's officers, agents and employees imparted such expression or suggested the substance thereof to the attorney. None of the correspondence nor did the print of the emitter contain such expression adopted by the attorney in the amendment nor did it suggest such to the attorney.

The disclosure of plaintiff's emitter by the correspondence referred to in finding 18 to defendant was not made in confidence.

The defendant was not guilty of any inequitable and unethical business conduct in adopting the expression in Claim 4. The defendant was not guilty of wrongfully appropriating any disclosure of plaintiff in this transaction. The defendant was not guilty of any unconscionable conduct in this transaction. The defendant did not wrongfully profit from this transaction. The plaintiff suffered no detriment and damage from any wrongful conduct of defendant in this transaction.

Infringement.

52. The method herein charged to infringe method patent 2,685,536 has been used in the United States by plaintiff subsequent to August 3, 1954, the date on which that patent issued. The apparatus charged to infringe apparatus patent 2,794,417 has been used in the United States by plaintiff subsequent to June 4, 1957, the date on which that patent issued.

53. Plaintiff's accused method and apparatus employ an atomizer comprising two coaxial metal disks spaced about 0.007 inches apart, presented edgewise toward the article and spaced from the article by a distance of about

15 inches. The article is grounded while a high-voltage source connected to the atomizer creates an electrostatic field between it and the article. Liquid coating material supplied at a controlled rate near the center of the disks is formed into a film in the space therebetween and flows radially outward to the disk periphery. A spacer or shim between the disks confines the liquid film to a portion of the disk circumference. At the periphery of the disks, the field draws the edge of the film into a series of aligned, closely-spaced cusps and atomizes finely-divided, electrically-charged particles from the tips of such cusps. The field then disperses the atomized particles and deposits them on the article.

54. While in all the specific embodiments of the method and apparatus disclosed in the patents in suit the liquid emerges from the interior of the atomizing head through a plurality of orifices and is mechanically divided or concentrated into more or less discrete droplets from which the atomization takes place, the method claims in suit are not limited to feeding the liquid through a plurality of orifices or to the concentration of the liquid into more or less discrete droplets. Similarly, Claim 4 of the apparatus patent in suit is not limited to apparatus embodying an atomizer which has a plurality of feed orifices or mechanical provision for concentrating the liquid into droplets.

55. The "points" at or from which atomization is required to take place, in accordance with the terms of Claims 1, 5, 6 and 8 of the method patent and Claim 4 of the apparatus patent in suit, are points in space and not physical or structural features of the atomizer. Plaintiff does not avoid such claims by presenting the liquid coating material to the field as a uniform film edge and allowing the field to form it into cusps and thus determine the spacing of the points at which atomization occurs. Neither are the claims avoided by the fact that in the use of the

accused method and apparatus the location of such points may vary.

56. The accused method meets every requirement of each of the claims in suit of method patent 2,685,536.

57. The accused apparatus meets every requirement of Claim 4 of apparatus patent 2,794,417 in suit.

58. Plaintiff's accused method and apparatus were developed with full knowledge of defendant's method and apparatus embodying the inventions of the patents in suit. Plaintiff's method and apparatus did not spring from the prior art, but represent an adoption of the basic concepts first invented and usefully applied by the patentees of the patents in suit.

59. Nothing in the prior art or in the prosecution of the applications which resulted in the patents in suit requires any of the claims in suit to be limited to exclude the accused method and apparatus.

Alleged Misuse of the Patents in Suit (Fourth Defense to Supplemental).

60. Defendant has employed essentially the same marketing system and licensing practices from the time of its organization to the present. It seeks to interest prospects in its coating system by advertising in trade publications, by the distribution of sales brochures, and by direct solicitation, in all of which it refers to its systems as the No. 1 and No. 2 "processes." If a prospect expresses interest, defendant obtains from him data on his product, his coating material, the type and thickness of finish desired, his paint "mileage" (finished units per gallon) under existing procedures, his conveyor, and other relevant factors, and invites him to submit samples of his products for a laboratory test.

61. The electrostatic spray coating needs of defendant's prospective customers vary substantially, depending

upon the nature and size of the article to be coated, the coating material to be used, the type of finish desired, and other production considerations. In defendant's laboratory a painting operation is designed, set up, and operated for the prospect without obligation, employing his products and coating material and simulating the conditions existing or contemplated in his plant. From this pilot operation, anticipated coating material savings are computed and the application and quality of the finish are demonstrated to the prospect. If the prospect remains interested, defendant's engineers then make a drawing of the system and apparatus arrangement demonstrated to and desired by the prospect, and a proposed agreement is submitted to him on one of defendant's standard printed agreement forms.

62. The agreement licenses the customer, or user, to use the particular system shown schematically in the identified engineer's drawing for the purpose of coating the articles specified, and is terminable by the user at any time upon a thirty-day notice, and by the defendant at any time after three years upon a six month notice. Under the terms of the agreement, when desired by the prospective customer, defendant furnishes, on essentially a lease basis, the specialized equipment necessary for the operation of the system designed for him, sends its engineer to supervise installation in the user's plant, and undertakes to replace parts which become defective.

As consideration for the foregoing, a license of the No. 2 Process pays: (a) an initial fee which varies with the design of the system and apparatus licensed, and (b) monthly fees representing a portion of the user's savings resulting from the use of the system. The size, shape, and contour of the article to be coated determine the quantity of paint which can be saved through use of the system, and defendant has classified articles of manufacture on this basis. The monthly fee is computed as a

percentage of the cost of the coating material used in the system by the user, which percentage depends upon the class into which the article falls and is in proportion to the potential paint saving in coating that article. In practice, this formula, as applied to each individual user, results in his paying for the use of the system compensation related to the actual benefit to that user in his particular operation, subject to a specified minimum.

The initial fee of a No. 1 Process licensee varies with the number of air-spray guns which are to be used, and the monthly fee consists of a fixed minimum amount, plus a percentage of the cost of the coating material used in the system by the user, which percentage is uniform for all users and decreases as the quantity of material used increases.

63. In the event any prospective user would not desire that defendant furnish the specialized equipment, installation supervision and parts replacement service, but would desire a license under defendant's applicable patents to use one of the aforesaid systems, defendant will grant such non-equipment license by means of a different standard printed form agreement, in consideration of substantially lower initial and monthly fees.

64. Satisfactory performance of defendant's systems depends upon the character and quality of the specialized equipment incorporated therein. Defendant recommends its systems and enters into license agreements only where its analysis shows that the system will perform satisfactorily for the licensee, effect significant savings, and reflect credit upon the process. Where the license agreement requires defendant to furnish such equipment, supervise its installation, and replace defective parts, defendant, as a matter of standard business policy, guarantees to the user that the system will coat the user's articles to his

satisfaction, and will permit the user to terminate the agreement with refund of fees if the system does not do so.

65. Although much of the specialized equipment required for the practice of defendant's processes was and is not available on the open market and defendant has produced the same and furnished it to its licensees in order to be able to market its processes, it has always been the express policy of the defendant, and so understood by all of its officers and sales and management personnel, that if a prospective licensee preferred to obtain equipment elsewhere than from defendant, he was free to do so and at reduced fees could obtain a license from defendant without equipment, installation supervision, or part-replacement service. This policy was expressed to all distributors and salesmen in a bulletin issued by the Ransburg partnership on August 29, 1947, and has been reiterated by defendant in bulletins of August 18, 1950; May 27, 1953; July 15, 1953; May 13, 1954; April 4, 1955; and June 6, 1956. Although no prospect of defendant had ever expressed interest in a license without equipment, in 1953 it prepared and stocked standard printed contract forms for licenses without equipment as to each process; instructed its sales personnel to advise all prospective customers that non-equipment licenses were available; and informed its existing licensees by letter that should they desire to return defendant's equipment and retain only a license, their monthly fees would be reduced by stated amounts. Those licensees with whom agreements had been consummated, but who had not yet paid the initial fee, were informed that the initial fee would also be reduced by a stated amount. Again on May 13, 1954, salesmen were reminded by bulletin to advise all prospective customers that they could obtain a license without equipment for reduced initial and monthly fees. Since 1953 defendant's sales brochures describing the No. 2 Process have stated

that defendant will supply the equipment "when desired," and are handed or mailed to virtually every prospect and distributed at defendant's display at trade shows at the rate of approximately 10,000 copies per year. When proposed agreements providing for equipment are transmitted to the prospect, the letter points out that the agreement so provides, and states that defendant understands that the prospect prefers this contract to one under which the equipment is not furnished. Defendant thus takes steps to inform its prospects in writing of the availability of process licenses without equipment upon the initial contract, and again when transmitting the proposed agreement for execution.

66. The defendant has never at any time required that any person desiring a license under either of the patents in suit, or any of its other patents, must obtain from it, or pay for, equipment, installation supervision, or part-replacement service as a condition to the granting of the license. No prospective licensee has requested a license to practice the process without defendant's furnishing equipment, or that any such prospective licensee has been refused such a license.

67. As of the filing of this cause, defendant has granted 733 electrostatic coating licenses, of which 463 were still in force and effect. Defendant has been required to furnish equipment by all agreements licensing air-type systems except (a) the license to Hillgren Manufacturing Company, Huntington Park, California, granted as part of the settlement of defendant's suit against Hillgren for patent infringement, and licensing the use of defendant's process with infringing equipment previously acquired elsewhere by Hillgren, and (b) a few agreements whereby existing licensees who ha ddefendant's equipment under a prior agreement were granted licenses to use the process for additional or extended purposes by means of equip-

ment procured by themselves and connected by them to defendant's previously-furnished power pack. All No. 2 Process license agreements have included equipment.

Because of the desire of the prospective licensees to have a satisfactory working system, which will perform as demonstrated in defendant's laboratory, the licensees prefer to have defendant supply the equipment. The evidence shows that 55 of defendant's licensees who received the 1953 letter advising that they could have a non-equipment license if they so preferred, subsequently executed 97 agreements for additional licenses and in every case chose an agreement requiring defendant to furnish the equipment. No licensee of the defendant, at the time the license agreement was consummated, did not prefer an agreement under which defendant would furnish equipment to one under which it would not. Nor has any licensee been in any manner coerced into taking undesired equipment, installation supervision, or part-replacement service as a condition to the grant of a license.

68. The equipment supplied by defendant to its licensees consists of the minimum specialized equipment needed for use of the particular systems licensed. The equipment, as a whole or combination, has no other substantial use.

69. Defendant does not sell equipment outright. It has never licensed anyone under its United States patents to make and sell electrostatic spray-coating systems.

70. No terms for licenses with or without equipment are quoted by defendant to prospective licensees unless such prospects express interest therein or request quotations. No prospective licensee ever expressed interest in, or requested, quotations on a No. 2 Process non-equipment license prior to defendant's quotation of March 23, 1954 to Webster Chicago Corporation.

Thus, the terms upon which defendant would have quoted a No. 2 Process non-equipment license, had a request

therefor been made, were academic until 1954. However, the pricing schedule established by defendant in 1953 and 1954 included rates for non-equipment licenses. The initial fee for a license with equipment ranged from $8,100 to $12,500 per unit, depending upon the type and complexity of the system designed; whereas a non-equipment license was available for an initial fee of $4,100. The minimum monthly fee without equipment was correspondingly less than if equipment were furnished. Whenever any prospective licensee requested quotation of non-equipment license terms, or showed interest in them, defendant quoted such terms. Any terms quoted to any prospect for a non-equipment license made due and proper allowance for elimination of the equipment and related services not to be furnished thereunder.

Alleged Package Licensing.

71. Defendant's license agreement forms do not identify the specific patents under which the user is licensed, but grant a right or license to use an identified process (with or without compressed-air) to coat particular items in accordance with the specially-designed system shown in the identified drawing. The defendant has never required any prospective licensee, as a condition to receiving a license under any patent, to take or pay for any license under any patent which did not apply to the system described in the license agreement. No prospective licensee has ever requested a license under any of defendant's patents which defendant has refused to grant such license unless such prospective licensee also takes or pays for a license under one or more other patents. No licensee of defendant has at any time received or paid for a license under any patent which did not apply to the system described in the license agreement.

Alleged Violation by Defendant of the Anti-Trust Laws and Unfair Competition.

72. On April 7, 1943, the Ransburg partnership purchased from Western Electric Company, Incorporated, the Pugh patent 1,855,869, subject to a license reserved to Western Electric and Bell System companies, which patent had not been, and was not then being, used in the seller's manufacturing operations. This patent, which expired on April 26, 1949, was for a method of and apparatus for coating articles, wherein articles on a conveyor passed through a closed chamber, into which a compressed-air atomized spray of coating material was introduced, the spray nozzle and articles being connected to a source of electrical energy of high potential, giving the sprayed particles a charge opposite that of the articles and attracting them to the uncoated portions of the articles. The partners deemed it advisable, if not necessary, on advice of counsel, to acquire this patent or a license under it in order to permit them to proceed with their development of their air-type No. 1 Process and to market it free from danger of possible infringement charges; and they purchased the patent for $5,000, and the defendant retained it until its expiration, with that purpose and intent.

73. In settlement of interference proceedings No. 80,369 in the United States Patent Office, between patent applications of Harold P. Ransburg, Serial No. 366,529, and Charles K. Gravley, Serial No. 313,914, the Ransburg partnership entered into an agreement of May 3, 1943, with the Brush Development Company, Cleveland, Ohio, under the terms of which, for cash and other consideration, Brush sold to Ransburg the Gravley application, upon which United States patent No. 2,359,478 issued on October 3, 1944. This patent is upon an electrostatic method and apparatus for removing excess coating material from arti-

cles previously coated by dipping. Its acquisition by the partnership and retention by the defendant did not damage the plaintiff, who has at no time attempted to market detearing devices.

74. When the Ransburg partnership was in the intial stages of marketing its air-type No. 1 Process, it received from Behr-Manning Corporation, Troy, New York, a leading manufacturer of sandpaper and abrasives, a written notice dated November 22, 1940, stating that some of the latter's patent coverage was directed to the art of "electrodeposition of paint or other liquids," and suggesting a meeting to discuss the matter. Behr-Manning's patents pertained primarily to the manufacture of abrasives and flock-coated articles. However, after the parties had engaged in some discussions, the Smyser patent 1,788,600, which was issued originally on January 13, 1931, upon a method for electrostatically making abrasive articles and appartus therefor, was reissued on January 11, 1944 (Re. 22,419), with claims extending to the electrostatic coating of articles as practiced by the Ransburg partnership. Two of such claims were indentical to claims originally issued in the Pugh patent, and might conceivably have been asserted against the Ransburgs and their air-type No. 1 Process customers. Behr-Manning owned the rights to said Smyser reissue patent. The Ransburg partners were concerned about these obstacles to their development and marketing, as expressed in their letter to Behr-Manning of July 3, 1944, as follows:

> "Notwithstanding the wide separation of the fields in which we have been operating, it is easily possible that certain aspects of our patent protection might well overlap, particularly in view of the present Pugh status.
>
> "It seems that we mutually can expect every advantage from resuming the discussion to some mutually satisfactory conclusion so that each of us may aggressively pursue our endeavors without concern."

After further negotiations, the parties entered into an agreement as of September 26, 1944, whereby Ransburg granted to Behr-Manning an exclusive royalty-free license with right to sublicense under Ransburg's listed patents and applications, limited in substance to abrasive, flock-coated, and fiber-coated articles; and Behr-Manning granted to Ransburg a similar license under the listed Behr-Manning patents and applications, for use in "electrostatic propulsion, dispersion, orientation, deposition," etc., of liquid particles, except as to the aforesaid abrasive, flock-coated, and fiber-coated articles. Such patent rights as the Ransburg partnership received pursuant to this agreement were not directed to airless electrostatic spray painting or coating, and no rights were granted by Ransburg to Behr-Manning under the Starkey, et al application of September 19, 1944, which resulted in the patents here in suit. On January 1, 1948, defendant succeeded to the rights of the partnership under the agreement. Said Smyser reissue patent expired on January 13, 1948.

75. Prior to the execution of said agreement of September 26, 1944, Behr-Manning was not engaged in the business of marketing electrostatic spray-painting systems of either the air or airless type; had done no development work in that field; and in fact was excluded therefrom by the Harold P. Ransburg et al patents 2,247,963 and 2,334,648, and by Pugh patent 1,855,869. Neither has defendant or its predecessor at any time made or marketed abrasives or flock-coated articles. The agreement, having been executed at a time when Behr-Manning was already excluded from said field by Ransburg's patents, did not as a matter of fact exclude or remove Behr-Manning from said field as an existing or potential competitor of Ransburg. After the execution of the agreement, defendant received two inquiries as to the use of electrostatic processes for manufacture of abrasive, flock, or fiber products.

and in each instance the inquirer was informed that defendant's interest was in the painting field and that perhaps Behr-Manning could assist the inquirer. There is no evidence of any agreement, understanding, or arrangement between Behr-Manning and defendant except as set forth in said written agreement. The sole intent and purpose of the partnership in executing said agreement, and of defendant in succeeding to it, was to permit the marketing of its air-type No. 1 Process free from the possible risk of claims or suits for infringement of the listed Behr-Manning patents. The agreement in no way prohibited either party from later entering the field theretofore engaged in by the other, except insofar as the patents which were the subject of the agreement would have prevented such entry.

76. Among the patents under which the Behr-Manning agreement purported to give the Ransburg partnership a license were Winternute patent 2,221,338 and Meston patent 2,097,233. After the execution of the agreement, in marketing its No. 1 Process, the partnership gave assurances to some of its prospective licensees that it had an exclusive license under said patents, and license agreements were thereafter consummated. In early 1948, defendant learned that, at the time of the execution of the agreement with Behr-Manning, the latter did not in fact have the right to grant Ransburg a license under said two patents, and that such right was owned by Research Corporation. Thereafter on October 7, 1948, defendant executed an agreement with Research Corporation whereby, in consideration of the payment of royalties, defendant obtained an exclusive license under said two patents, with the proviso that, at any time after June 30, 1951, either party could convert the license to a non-exclusive one. By written notice dated May 26, 1954, defendant exercised this right and so converted the license. The Meston patent

expired on October 26, 1954, and the Wintermute patent expired on November 12, 1957. The intent and purpose of defendant in executing said agreement was to protect itself and its licensees against the possible risk of claims or suits for infringement of said patents.

77. The only patent related to the airless No. 2 Process which defendant has acquired from any person other than its own personnel is Simmons patent 2,808,343, which was assigned to defendant on March 5, 1952, by C. C. Simmons, President of Enameled Steel & Sign Company, Chicago, Illinois, pursuant to the terms of a pre-existing agreement between defendant and said company dated March 21, 1949. Approximately two years before defendant commenced the general marketing of its No. 2 Process, it entered into an arrangement with the above company whereunder defendant disclosed confidential engineering and development data on the process and Simmons' company performed research and development work with the process for defendant essentially as a consultant during the course of which it used the process in its own commercial coating of acoustical pans. As a part of this arrangement, the parties entered into the aforesaid written agreement, terminable upon thirty days' notice by either party at any time, licensing Simmons' company, upon favorable terms, to use the process, and providing that the user would treat all information relating to the process as secret and confidential; would disclose to defendant all techniques, knowledge, and information relating to inventions or improvements upon electrostatic coating process or apparatus; and would assign to defendant any invention, improvements, or letters patent relating thereto.

78. None of the aforesaid agreements pursuant to which defendant acquired patents or patent right was entered into by defendant or its predecessor with the purpose or

intent of restricting entry of competitors into the field of electrostatic spray-coating equipment, or of coercing the trade into dealing with defendant, and there is no evidence that any of them had such effect.

79. Plaintiff has at no time attempted to secure from anyone a license under any of the patents assigned or licensed to defendant pursuant to any of the aforesaid agreements, nor did plaintiff know of the existence of any of said agreements until after the commencement of this action and discovery depositions herein. None of said agreements, or any right acquired by defendant thereunder, affected plaintiff in any way.

80. Except for replacing defective parts, defendant does not contract to service or maintain the equipment used by its licensees and the licensees are free to perform such service and maintenance themselves, or obtain them from any source they desire. Plaintiff has at no time attempted to engage in the business of servicing electrostatic spray-coating equipment or dealing in used equipment or in replacement parts.

81. Defendant has no monopoly in the marketing of compressed-air electrostatic spray-coating systems. Such systems are, or have been marketed in competition with its No. 1 and No. 2 Processes by the following, some of whom have been so engaged since 1950 or 1951:

Ashdee Electrostatic Products, Inc.
Homewood, Illinois

Scientific Electric Co.
Garfield, New Jersey

Ionic Electrostatic Corp.
Garfield, New Jersey

H. G. Fischer Co.
Franklin Park, Illinois

Staticote Systems, Inc.
Chicago, Illinois

Plaintiff felt that it was free to enter this field at any time, but chose not to do so until 1958.

82. Defendant dominates the marketing in the United States of airless electrostatic spray-coating systems by virtue of the monopoly created by its patents. The defendant has never extended or enlarged said patent monopoly beyond its proper scope. Neither has the defendant a monopoly in any articles of commerce, except the atomizing heads which were specially designed for and have no other use than in defendant's airless electrostatic process.

83. Any article which can be coated by an airless electrostatic system can be coated by means of a compressed-air electrostatic system or by non-electrostatic compressed-air guns, operated manually or automatically, the major advantage of the airless electrostatic system over the others, being economic. In painting many articles of manufacture, airless electrostatic, air-type electrostatic, non-electrostatic air-spray systems, flow-coating, roller-coating or dipping, can and are substituted one for the other and are competitive. In the year 1957, the total cost of all paint, varnish and lacquer used industrially in the United States was $643,889,000. The total cost of all paint, varnish and lacquer used in that year in defendant's No. 2 Process equipment by its licensees was $6,693,642, or approximately 1% of the total, and the total cost of such material used in that year in air-type electrostatic equipment under defendant's licenses was $3,725,857, or approximately 0.6 of the aforesaid total.

84. Since its incorporation, defendant has employed a total of approximately 45 versions of the equipment and non-equipment license forms for its coating processes, most revisions being minor in nature. So that defendant, and all of its licensees, might share in the use of any improvements developed by licensees who had the advantage of the use of the No. 2 Process in its early field experience,

the forms employed from April, 1951, to January, 1955, to license its use included a requirement in substance that the licensee grant back to defendant a royalty-free, non-assignable, non-exclusive license, with right to sublicense, under any patents, inventions, or improvements acquired by licensee during the term of the agreement, and within two years thereafter, relating to air-less electrostatic coating methods and/or apparatus. Some of said license agreements are still in effect, but said grant-back clause has not been included in defendant's forms since January, 1955. Defendant has never acquired any patent or patent right pursuant to said clause in said agreement forms. Said clause has not stifled or discouraged research or invention by licensees.

85. The defendant has never leased equipment to any person upon the condition, agreement, or understanding that the lessee should not use or deal in the equipment of a competitor or competitors of the defendant.

86. In granting licenses under its patents, including the patents in suit, defendant impliedly represents to the trade and in interstate commerce, that it is the exclusive owner of the inventions covered by its patents. The defendant never represents that it exclusively owns any other or greater monopoly.

87. For the purpose of enabling manufacturers of paint and other coating materials to adapt their products for use in defendant's systems, defendant has granted to several of such manufacturers licenses to use the processes upon uniform terms which differ from those of defendant's standard forms, the principal difference being that the initial fee is lower and no monthly fees are payable. These licenses are for experimental and development work in paint formulation, and are not for production-line finishing. On occasion, one or more of such paint manufacturers has advertised that its product is suitable for use in de-

fendant's process. Such advertising has not been solicited by defendant and is not a condition of any of the aforesaid licenses. None of said licenses, or any of said advertising, has damaged plaintiff in any way.

88. The defendant has never conspired with anyone to restrain trade, or to create a monopoly, or to commit any act of unfair competition to plaintiff's damage.

89. The defendant's program or method of licensing the use of its processes or leasing its equipment, or any of its policies related thereto, considered individually or collectively, has not had the effect of enlarging or extending its patent monopoly beyond the scope contemplated by said patents.

90. The issuance and existence of the Starkey-Ransburg method patent 2,685,536, and the failure of plaintiff to obtain a license thereunder to make and sell equipment for the practice of the patented process on terms preferred by plaintiff, rather than any unlawful business practice of the defendant, prevented the only attempted sale by plaintiff of its SK661 emitter and related equipment, and caused plaintiff to desist from further sales efforts.

Alleged Knowledge by Defendant of Relevant Prior Art and Withholding Thereof from Patent Office Concerning the Defendant's Patents in Issue.

91. The defendant, during prosecution of the applications which resulted in the patents in suit, made no material negligent or willful misrepresentations of the Patent Office or withheld from the Patent Office knowledge of pertinent prior art. Defendant did not have knowledge of any prior art more pertinent than the Darrah patent, and that patent was known to the Patent Office.

92. The defendant did not fail to disclaim claims of the patents in issue that were covered by anticipated prior art.

93. The defendant in prosecuting the applications voluntarily cancelled some claims in the applications which issued as the patents in issue but the defendant in no way expressly or impliedly cancelled the remaining claims and particularly claim four in issue which covers plaintiff's emitter.

94. It is unnecessary to find the facts pertinent to defendant's second defense to the plaintiff's cross-counterclaim in view of the findings set forth above and the following conclusions of law.

Conclusions of Law

Upon the foregoing findings the Court concludes the law to be as follows:

1. The Court has jurisdiction of the parties and subject matter of the issues of defendant's counterclaim and supplemental counterclaim and plaintiff's defenses thereto; and of plaintiff's cross-counterclaim and defendant's defenses thereto.

2. The defendant has maintained its burden of proof of the essential facts of defendant's counterclaim and supplemental counterclaim. The plaintiff has not maintained the burden of proof of the essential facts of any one of plaintiff's affirmative defenses to defendant's counterclaim and/or supplemental counterclaim. The law is with the defendant and against the plaintiff on each of the issues of defendant's counterclaim and supplemental counterclaim and plaintiff's defenses thereto.

3. The plaintiff has not maintained the burden of proof of the essential facts of plaintiff's cross-counterclaim. The law is with the defendant and against the plaintiff on each of the issues of plaintiff's cross-counterclaim and defendant's first defense thereto.

4. It is unnecessary to and the Court does not conclude

on the defendant's second defense to the plaintiff's cross-counterclaim in view of these findings and conclusions?"

5. United States Letters Patent No. 2,685,536, entitled "Method for Electrostatically Coating Articles," as to claims 1 to 6, 8, 10, and 11 here in suit, is in all respects valid."

6. Plaintiff has infringed the aforesaid patent by using and practicing the method or process thereof.

7. United States Letters Patent No. 2,794,417, entitled "Apparatus for Electrostatically Coating Articles," as to claim 4, here in suit, is in all respects valid.

8. Plaintiff has infringed the aforesaid patent by making and using the apparatus thereof.

9. Defendant is entitled to: (a) an injunction against the plaintiff enjoining further infringement, direct or contributory of each of the patents described in conclusions 5 and 9, and (b) a judgment for damages as provided by Title 35, U. S. C., Sections 284-285, including reasonable attorneys' fees, costs, and interest, and for an accounting to ascertain the amount thereof for such infringement of each of the patents described in conclusions 5 and 9 and the cause is continued as to these issues pursuant to the stipulation of the parties and Rule 42(b) of the Federal Rules of Civil Procedure.

10. The defendant is entitled to judgment on said cross-counterclaim; and to recover its costs from the plaintiff.

11. Every finding of fact deemed a conclusion of law is hereby adopted as a conclusion of law.

Dated this 16 day of June, 1959.

Cale J. Holder,
Judge, United States District Court,
Southern District of Indiana.

UNITED STATES DISTRICT COURT,
(Caption—56-C-262)

ENTRY.

The Court, having filed herein its Findings of Fact and Conclusions of Law on June 16, 1959, and it appearing that there are certain typographical errors in Conclusion of Law No. 9, said Conclusion of Law is hereby amended upon the Court's own motion to read as follows:

> "9. Defendant is entitled to: (a) an injunction against the plaintiff enjoining further infringement, direct or contributory, of each of the patents described in conclusions 5 and 7, and (b) a judgment for damages as provided by Title 35, U. S. C., Sections 284-285, including reasonable attorneys' fees, costs, and interest, and for an accounting to ascertain the amount thereof for such infringement of each of the patents described in conclusions 5 and 7 and the cause is continued as to these issues pursuant to the stipulation of the parties and Rule 42(b) of the Federal Rules of Civil Procedure."

Dated this 18 day of June, 1959.

Cale J. Holder,
Judge, United States District Court, Southern District of Indiana.

UNITED STATES DISTRICT COURT.

(Caption—56-C-262)

JUDGMENT.

This cause having been submitted to the Court for trial of all issues except damages and attorneys' fees, pursuant to Rule 42(b) of the Federal Rules of Civil Procedure, without intervention of a jury, and the parties having submitted their proposed special findings of fact, conclusions of law thereon, judgment entries, and post-trial briefs, and having exchanged their trial briefs, in accordance with the entry herein of January 8, 1959; the Court having considered the pleadings, the opening statements of counsel, the evidence received at the trial, the proposed special findings of fact, conclusions of law, judgment entries, briefs, and arguments of counsel, and having filed herein on June 16, 1959, its Special Findings of Fact and Conclusions of Law pursuant to Rule 52 of the Federal Rules of Civil Procedure.

Upon the aforesaid Special Findings of Fact and Conclusions of Law, It Is Hereby Adjudged And Decreed:

1. That United States Letters Patent No. 2,685,536, entitled "Method for Electrostatically Coating Articles," as to claims 1 to 6, 8, 10, and 11, is in all respects valid.

2. That Plaintiff has infringed the aforesaid patent by using and practicing the method or process thereof.

3. That United States Letters Patent No. 2,794,417, entitled "Apparatus for Electrostatically Coating Articles," as to claim 4, is in all respects valid.

4. That Plaintiff has infringed the aforesaid patent by making and using the apparatus thereof.

5. That the Plaintiff, including its officers, agents, servants, employees, and associates, and each of them, is enjoined from:

(a) Using the method or process employing the invention covered by claims 1 to 6, 8, 10, and 11 of United States Letters Patent No. 2,685,536, or inducing or contributing to the use of said method or process, during the life of said patent; and

(b) Making, using, or selling the device described in this cause as the SK-661 emitter for use in an apparatus or system for electrostatically coating articles and from making, using, or selling any other devices, equipment, or apparatus for electrostatically coating articles embodying the invention covered by Claim 4 of United States Letters Patent No. 2,794,417, and from inducing or contributing to the infringement of said claim, during the life of said patent; and

(c) Otherwise infringing, directly or contributorily, the aforesaid claims of said patents.

6. That the Defendant recover from the Plaintiff damages for infringement of United States Letters Patent No. 2,685,536 and No. 2,794,417, pursuant to Title 35, U. S. C., Sections 284-285, together with reasonable attorneys' fees and costs, by reason of the making and using in the United States since the respective dates of issue of the aforesaid patents, the aforesaid SK-661 emitter and the apparatus of which it is a part for electrostatically coating articles; and the cause is continued as to these issues pursuant to the stipulation of the parties and Rule 42(b) of the Federal Rules of Civil Procedure.

7. That the Plaintiff's cross-counterclaim is hereby dismissed and that Defendant recover its costs thereon.

Dated this 18 day of June, 1959.

Cale J. Holder,
Judge, United States District Court, Southern District of Indiana.

IN THE UNITED STATES DISTRICT COURT
For the Southern District of Indiana,
Indianapolis Division.

Binks Manufacturing Company, (a corporation of the State of Delaware), *Plaintiff,*	Civil Action No. IP 56-C-262.
vs.	
Ransburg Electro-Coating Corp., (a corporation of the State of Indana), *Defendant.*	

NOTICE OF APPEAL.

Notice is hereby given that Binks Manufacturing Company, plaintiff in Civil Action No. IP 56-C-262, hereby appeals to the United States Court of Appeals for the Seventh Circuit from all of the Judgment entered in said action on June 18, 1959.

Harold B. Hood,
1001 Hume-Mansur Building,
Indianapolis 4, Indiana,

Charles F. Meroni,
Otto R. Krause,
Hill, Sherman, Meroni, Gross & Simpson,
53 West Jackson Boulevard,
Chicago 4, Illinois,
Attorneys for Appellant, Binks Manufacturing Company.

UNITED STATES DISTRICT COURT.
(Caption—56-C-262)

ENTRY JULY 30, 1959.

This cause came before the Court on Plaintiff's Petition for an extension of time within which to file and docket record on appeal. The Court having considered said petition and being duly advised in the premises, now Grants the same, and

Orders that the time for filing said record on appeal be extended to and including September 30, 1959.

Cale J. Holder,
United States District Judge.

1021

Aug. 3, 1954 W. A. STARKEY ET AL 2,685,536

METHOD FOR ELECTROSTATICALLY COATING ARTICLES

Filed Sept. 29, 1944 2 Sheets-Sheet 1

FIG. 1

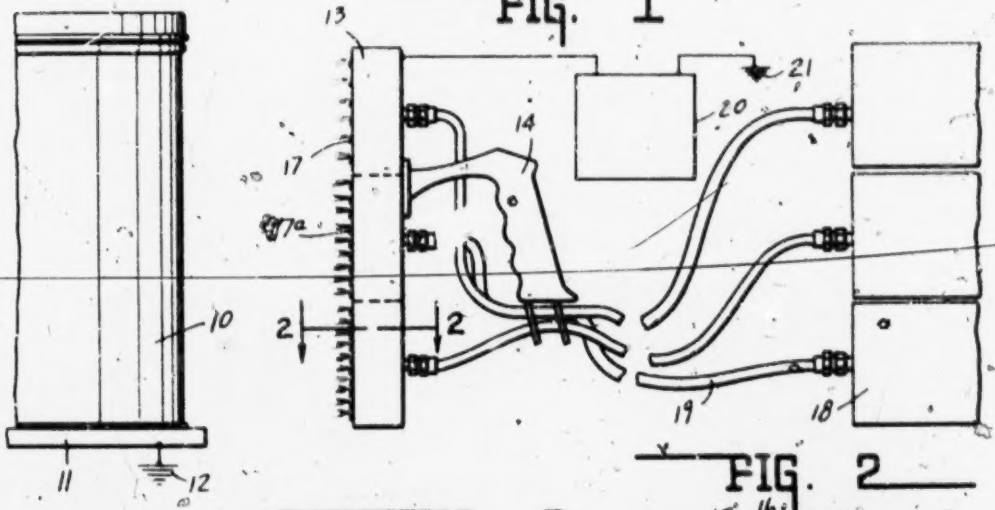

FIG. 2

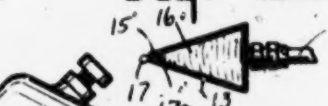

FIG. 3

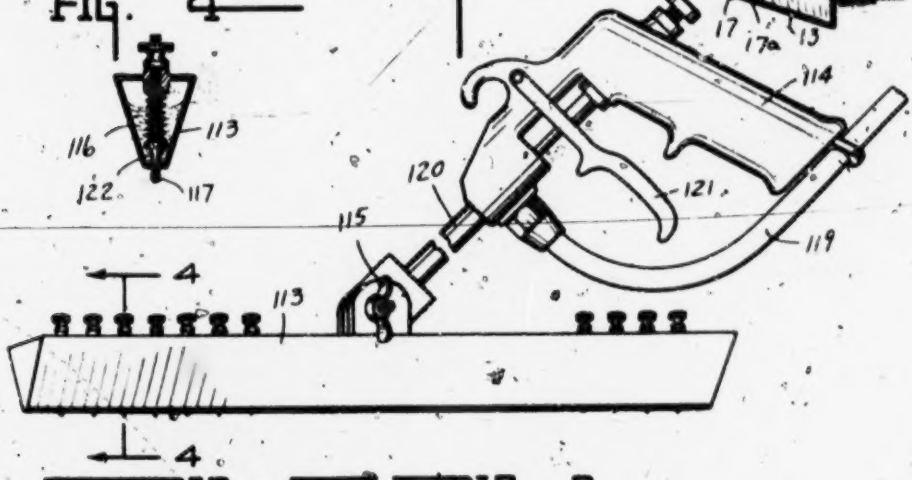

FIG. 4

FIG. 5

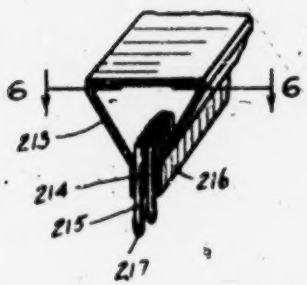

FIG. 6

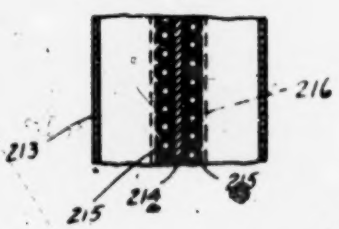

INVENTORS.
EDWIN M. RANSBURG
WILLIAM A. STARKEY
BY Lockwood, Goldsmith & Galt
ATTORNEYS

1023

Aug. 3, 1954 W. A. STARKEY ET AL 2,685,536

METHOD FOR ELECTROSTATICALLY COATING ARTICLES

Filed Sept. 29, 1944 2 Sheets-Sheet 2

FIG. 7

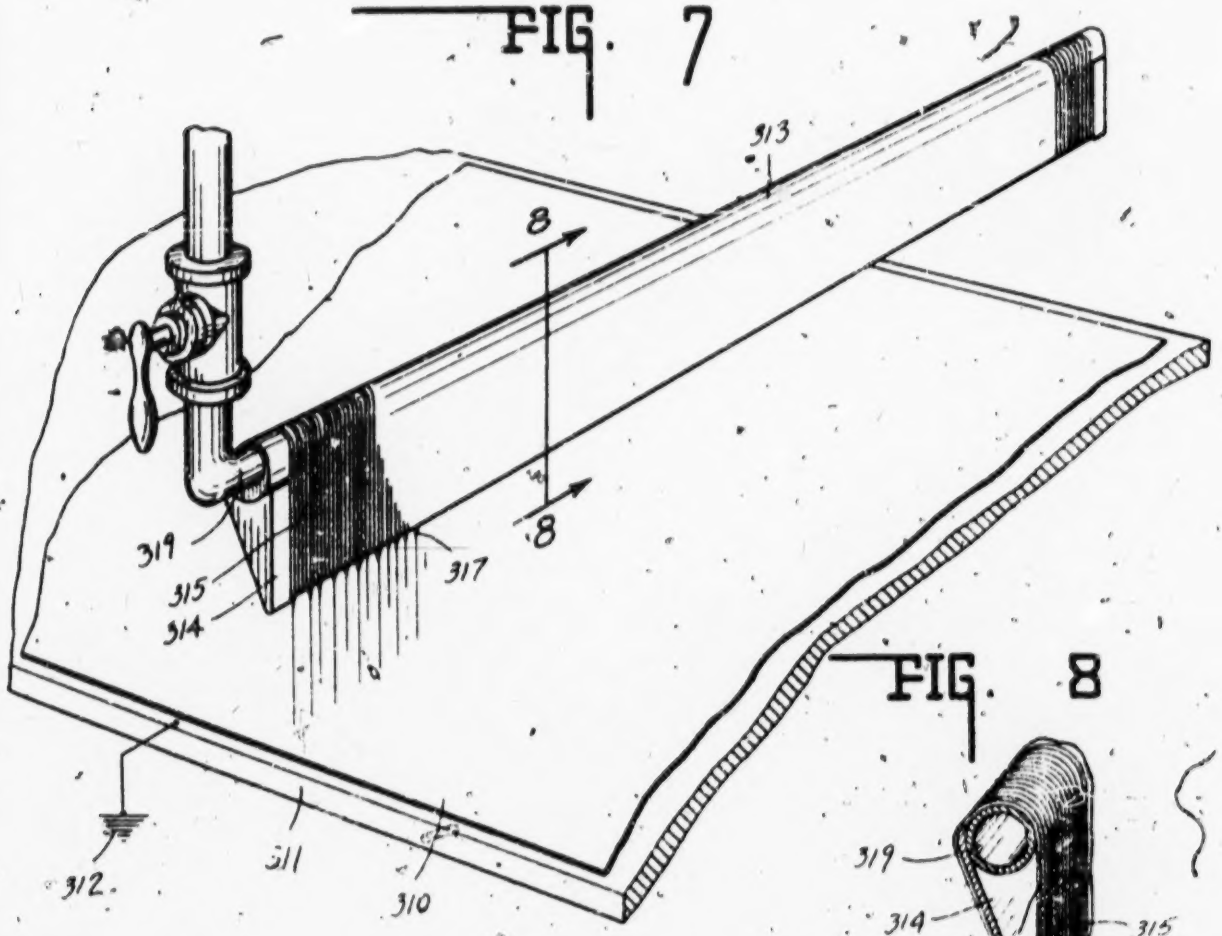

FIG. 8

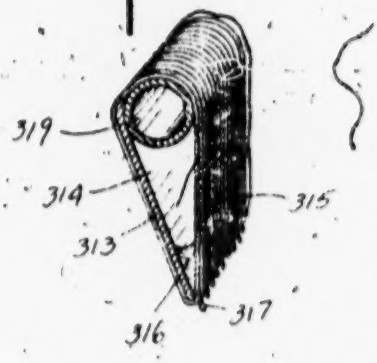

FIG. 9

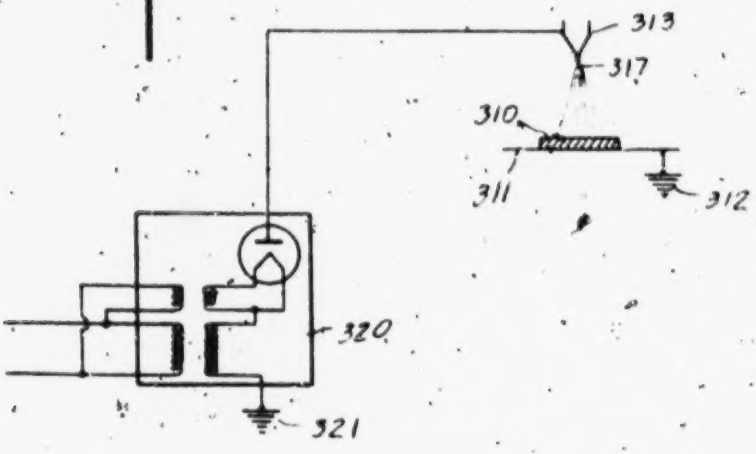

INVENTORS.
EDWIN M. RANSBURG.
WILLIAM A. STARKEY

tented Aug. 3, 1954

2,685,536

1025

UNITED STATES PATENT OFFICE

2,685,536

METHOD FOR ELECTROSTATICALLY COATING ARTICLES

William A. Starkey, Zionsville, and Edwin M. Ransburg, Indianapolis, Ind., assignors, by mesne assignments, to Ransburg Electro-Coating Corp., Indianapolis, Ind., a corporation of Indiana

Application September 29, 1944, Serial No. 556,390

11 Claims. (Cl. 117—93)

1

This invention relates to a method and apparatus for electrostatically coating articles with a liquid coating material, such as paint, lacquer, ink, wax and the like. Such articles to be coated may be of either conducting or non-conducting material, may be structural in character or comprise fabric or paper sheets.

In respect to the method of electrostatically coating articles by discharging a spray of coating material from an air operated or air atomizing spray gun reference may be made to such prior patents as Pugh, No. 1,855,859, issued April 26, 1932, for "Method and Apparatus for Coating Articles," and Ransburg and Green, Nos. 2,247,963 and 2,334,648, issued July 1, 1941, and November 16, 1943, for "Apparatus for Spray Coating Articles" and "Method of Spray Coating Articles," respectively.

However, in the use of spray guns or the like many disadvantages develop in that the air operated spray gun is limited to a comparatively small field of dispersion, but more important it causes the coating material to be discharged in non-uniform sized particles, and in variable patterns. Thus, there is an uneven dispersion of the coating particles over the surface to be coated due to the inertia generated in the discharge, causing the larger particles to travel further in the field than the more finely divided particles. In some arrangements, depending upon the direction of the discharge, a variable pattern of spray is created and reproduced on the surface to be coated, the heavier coating particles being caused to impinge over one area and the more finely divided particles over another area. By reason of such variance, it has been found necessary in practice under certain conditions of coating to arrange a sizeable battery of spray guns with particular regard to their variable patterns of coating application so that the several guns complement each other to even out the pattern as a battery.

It is the purpose of this invention to meet this problem of coating articles in an electrostatic field by eliminating the use of such spray guns and employ in place thereof a new method and apparatus for supplying the coating material for electrostatic precipitation upon the surface to be coated. This is accomplished by providing in the field a series or plurality of small inert droplets of coating material and establishing such electrostatic force in the field as to develop and transmit finely divided particles of coating material from said droplets to the surface of the article to be coated. In describing as "inert"

2

the drops or droplets from which atomization takes place, it is our purpose to indicate that during the coating process each drop is supported on the head as above described, and that while the drop may be continuously giving off liquid for atomization, replacement enables its identity as a supported body of liquid to be maintained.

Such method and apparatus has several important advantages over the spray gun arrangements heretofore employed. The coating material may be introduced into the electrostatic field by an applicator head having a series of orifices through which the material may ooze in the form of inert droplets. Such applicator head may be substantially coextensive with the surface to be coated and thereby take the place of a battery of spray guns as heretofore employed. The droplets will be developed into finely divided particles by the electrostatic force so that all particles will be transmitted or precipitated upon the surface to be coated uniformly over the entire surface.

A feature of the invention, as above described, resides in the applicator head including formation of the discharge orifices therein and the control of the rate of discharge of the material to form the inert droplets at approximately the rate of their electrostatic discharge. Thus, depending upon the viscosity and other characteristics of the material, the control of the applicator head will be such as to permit discharge of just the right quantity and size of the droplets to effect the greatest efficiency in coating a surface.

The full nature of the invention will be understood from the accompanying drawings and the following description and claims:

Fig. 1 is a diagrammatical illustration showing one arrangement of applicator in respect to the article to be coated. Fig. 2 is a section taken on the line 2—2 of Fig. 1. Fig. 3 is a perspective view of a modified form of applicator with a control handle associated therewith. Fig. 4 is a section taken on the line 4—4 of Fig. 3. Fig. 5 is a perspective sectional view showing a portion of a further modification of the applicator head. Fig. 6 is the same as Fig. 5, taken on the line 6—6 thereof. Fig. 7 is a perspective view of a further modification of the applicator head in association with the surface to be coated. Fig. 8 is a section taken on the line 8—8 of Fig. 7. Fig. 9 is a diagrammatical illustration of the circuit and one of the arrangements of the applicator head relative to the article to be coated.

The invention is illustrated by one modification

thereof in Figs. 1 and 2 wherein there is shown an article 10 to be coated mounted or carried upon a suitable support or conveyor 11 which is grounded at 12. An applicator head 13 is provided which is preferably substantially co-extensive with the surface to be coated. Said applicator head may be fixedly or adjustably mounted on a suitable support, or hand manipulated by a handle 14. The applicator head, as indicated in Fig. 2, is V-shape in cross section and along its reduced discharge edge 17a it is provided with a series of orifices 15 through which the coating material indicated at 16 may be oozed out in the form of droplets 17. The applicator head may be connected with a source of supply of coating material by a flexible tube, there being herein illustrated three compartments in the head, each connected with an individual source of supply 18 by a tube 19. The discharge edge 17a has an extent many times the maximum cross-sectional dimension of the passageways provided by the tubes 19. Sufficient pressure will be created in the containers forming the source of supply 18 for maintaining the material 16 in the head under just the proper pressure to cause the droplets to ooze therefrom as they are dispersed by the applied electrostatic force.

As illustrated, the applicator head is connected to a source of high voltage indicated at 20 through one terminal thereof, the other terminal of said source being grounded at 21 and through ground connected with an article 10 to be coated. Accordingly, the space or field between the applicator head and articel 10 is electrostatically charged by reason of the article being grounded and the applicator head being at high potential. The effect thereof is to cause an electrical force to act on the droplets 17, causing them to be broken up into finely divided or minute particles of coating material, such as to be attracted to the grounded article for deposition thereon. Thus, the grounded article may be referred to as a collecting electrode of one potential with the applicator head serving as a discharge electrode of a different potential. It is found that the electrostatic force set up in the field between the electrodes is such as to develop and transmit finely divided particles of the droplets 17 from one electrode to the other. In this connection it will be noted that as the droplets are caused to slowly ooze from the applicator head they are inactive or inert, but subject to being broken up into finely divided particles and distributed over the surface of the opposed electrode. The same action will take place wherein the applicator head may be grounded and the article directly connected with the source of high voltage and thus be charged at a high potential.

Another modification is illustrated in Figs. 3 and 4, wherein the applicator head 113 is adjustably supported by the handle 114 through a pivotal connection secured by thumb nut 115. The hose 119 leading from a source of coating material maintained under pressure, is connected with a valve operated conduit 120 controlled by the finger operated valve 121. Also, the droplets of coating material 117 may be controlled, depending upon the viscosity of the material indicated at 116 by a needle adjustment 122, which needle adjustably controls the orifice through which the material 116 is forced to provide the desired inert droplets.

Figs. 5 and 6 show a further modification of the applicator head indicated at 213. In this head the orifices through which the coating material flows are provided by a plate 214 clamped between opposed rows of needles 215. The needles are cylindrical so that the material will be caused to flow between them, the plate 214 and the clamping walls 216 so as to come out in the form of an inert droplet 217 of coating material.

In the modification of Figs. 7 and 8 there is illustrated a grounded surface 310 to be coated. This may be a continuously moving sheet of paper or any other article, it being understood that wherein such article or material is non-conducting, it is carried by and on a support or conveyor 311 of grounded conducting material. In this arrangement the applicator head 313 is supported across and above the surface to be coated, and coating material is fed thereto through the valve controlled pipe 314 leading from the source of such material. Said pipe extends through the head, having a series of orifices or openings therein through which the material may drip by gravity. Mounted on and connected to a source of high voltage through the pipe 319, there is a supporting shield 317 extending downwardly and terminating below the pipe to provide a frame for a wire wrapping 315. The coating material accumulates from the drippings into a pocket formed by the wire wrappings, as indicated at 316. The wire wrappings are slightly or sufficiently spaced to permit the coating material to slowly ooze or drip therebetween from the accumulation in the pocket indicated at 316 to form the droplets 317. In this instance the discharge or oozing of the material from the applicator head is aided by gravity, the droplets being thereupon broken up or developed into finely divided particles by the electrostatic force developed between the applicator head and the surface to be coated. Such finely divided particles will thereupon be dispersed by the electrostatic force over said surface and be applied to said surface. The applicator head can be grounded and the work maintained at high potential with equally efficient results.

By way of example, the arrangement of the overhead applicator of Fig. 7 is shown diagrammatically in Fig. 9, wherein the source of high voltage indicated at 320 has one terminal grounded at 321 and the other terminal connected with the applicator head 313 which is thereby maintained at high potential relative to the support or conveyor 311, which is connected with ground at 312.

As above pointed out, it is immaterial as to whether the article or the applicator head comprises the grounded electrode, since the electrostatic force set up therebetween will have the same effect on the droplets of coating material. Also, it is immaterial as to whether or not the article to be coated is of conducting or non-conducting material, and such article of non-conducting material is herein considered to be one of the electrodes wherein it is associated with or masks a grounded support of conducting material.

The invention claimed is:

1. A method of electrostatically distributing liquid as a coating on an article, comprising the steps of supporting liquid coating material in spaced relation to the surface of the article forming a spray by electrostatically atomizing such coating material from a plurality of points so closely spaced as to form a substantially continuous extended atomizing zone, said points being distributed relative to the article surface electrostatically dispersing the discrete coating

...erial particles formed at each point of atomi... electrostatically depositing such dispersed ...crete particles and while still in liquid state ...the article surface to form a finished coating, ...force feeding coating material to the points ...omization at a controlled substantially uni... rate to maintain thereat a supply of coating ...erial for atomization, said atomization, dis...on and deposition all being effected in quies... air by a single electrostatic field maintained ...ween the supported coating material and the ...cle surface, the distance between the article ...face and the supported coating material being ...ay times greater than the distance between ...acent ones of the points at which atomization ...the coating material takes place.

...In a method of electrostatically distributing ...id as a coating on a surface wherein liquid ...lied at a controlled rate to a single-fluid ...izing head is atomized into discrete particles ...such particles are dispersed to form a spray ...deposited in dispersed condition while still ...liquid state as a finished coating on a surface ...ed a substantial distance from the head, the ...g of maintaining between the head and the ...icle an electrostatic field which electrostati... effects said atomization, dispersion, and ...osition.

...A method of electrostatically distributing ...id as a coating on an article, comprising the ...s of positioning a body of the liquid at an ...izing zone in spaced relation to the article, ...izing discrete particles of the liquid as a ...ay from said body at said zone, force feeding ...e body with liquid at a controlled rate to re... ...face that so atomised, and dispersing said par...cles widely in at least two mutually perpen...icular directions and electrostatically depositing ...em still so dispersed and as discrete spray... ...articles while still in liquid state as a finished ...ating on the article, the movement of the spray ...articles being through a quiescent atmosphere ...hereby the electrostatic forces effect deposition ...n an adjacent article surface of at least a major... ...y of the spray particles which would have other...wise not deposited on the article surface, the dis...ance between the article and the atomizing zone ...eing great enough to permit said dispersion of ...the finely divided liquid spray particles as they ...proceed toward the article under the influence of ...electrostatic forces.

4. A method of electrostatically distributing liquid as a coating on an article, comprising the steps of supplying liquid coating material at a controlled rate to an atomizing zone located in spaced relation to the article, establishing said liquid as an electrode of an electrostatic field, atomizing finely divided discrete spray particles from the liquid at the atomizing zone, and dispersing such particles widely in at least two mutually perpendicular directions and depositing them still so dispersed and while still in liquid state as discrete spray particles on the article to form a finished coating thereon, the distance between the atomizing zone and the article being great enough to permit said dispersion of the particles as they proceed toward the article, the atmosphere in the region between the atomizing zone and the article being quiescent whereby electrostatic forces will be the predominant factor determining the paths respectively followed by the atomized particles as they move toward deposition; and moving said article relative to said atomizing zone so as to effect a substantial displacement of the article surface transverse to the general direction of the lines of force of the field during particle deposition to cause such lines of force to sweep such article surface.

5. In a method of electrostatically distributing liquid as a coating on an article wherein liquid coating material supplied at a controlled rate to a single-fluid atomizing head is force fed to and atomized into discrete particles from a plurality of points so closely spaced as to form a substantially continuous atomizing zone and such particles are dispersed and deposited in dispersed condition and while still in liquid state on an article spaced from said atomizing zone, the step of maintaining between the head and the article an electrostatic field capable of electrostatically effecting atomization, dispersion, and deposition of the coating material, the distance between the head and article being equal to at least several times the distance between adjacent ones of the points at which said atomization occurs.

6. A method of electrostatically distributing liquid as a coating on an article, comprising the steps of supplying liquid at a controlled rate, forming the liquid into an extended film and causing the film to flow toward an atomizing zone, atomizing finely divided, discrete particles of liquid at a plurality of closely spaced aligned points at said atomizing zone, and electrostatically dispersing such particles and depositing them on the article as a spray while still in liquid state, the distance between the atomizing zone and the article being materially greater than the film will bridge and great enough to permit the dispersion of the particles as they proceed toward the article under the influence of electrostatic forces.

7. The method of electrostatically distributing liquid as a coating on an article, comprising the steps of supporting a body of liquid coating material in the form of a film having an exposed surface, the terminus of said film being spaced from said article, establishing between said article and the terminus of the film an electrostatic field of such strength as both to be capable of electrostatically atomizing finely-divided, discrete liquid spray particles from said terminus of the film and of electrostatically dispersing such particles and depositing them still as discrete spray particles and while still in liquid state upon the surface of said article to form a finished coating on the same, and continuously and at a controlled rate replenishing in said body the coating material atomized therefrom for deposition by the action of the electrostatic field, the gap between the said terminus of the film and the article being wide enough both to insure that it will not be bridged by the supported liquid coating material and to permit the atomized particles, before being deposited, to be dispersed and distributed over a substantial area.

8. The method of electrostatically distributing liquid as a coating on an article, comprising the steps of positioning a body of liquid coating material in opposed spaced relation to the article, said body having an exposed surface, causing said body to flow forwardly, establishing between the article and the liquid body an electrostatic field of sufficient strength both to electrostatically atomize finely divided, discrete liquid spray particles from a plurality of aligned points so closely spaced as to provide a substantially continuous extended atomizing zone along the terminus of the exposed surface nearest the article and to electrostatically disperse said particles

and to deposit them on the article still in the form of discrete spray particles while still in liquid state, and continuously and at a controlled substantially uniform rate adding additional liquid coating material to said body at a point spaced rearwardly from said terminus to maintain said flow, said terminus and the article being spaced apart by a distance great enough to permit the atomized spray particles, before being deposited, to be dispersed and distributed as discrete spray particles over a substantial area.

9. The method of electrostatically distributing liquid coating material as a coating on an article, comprising the steps of causing the liquid to flow in a continuous stream and at a positively regulated rate to a point of atomization where such stream has an exposed surface, positioning the point of atomization opposite to and spaced from the article to be coated, establishing between the article and the exposed surface of the stream an electrostatic field, and with the aid of said field atomizing discrete particles from said exposed surface, dispersing such discrete particles, moving them through quiescent air and depositing them as a liquid spray on an adjacent article surface to form a finished coating thereon, the distance between the point of atomization and the article being greater than the stream will bridge and great enough that the deposited particles will be distributed over an area having each of its dimensions many times greater than the minimum cross-sectional dimension of the stream at the point of atomization.

10. The method of electrostatically distributing liquid as a coating on an article, comprising the steps of moving the article past and in spaced relation to a zone of atomization, feeding liquid coating material in a relatively narrow stream, spreading said stream to form it into a body of liquid coating material having an extent many times the maximum cross-sectional dimension of said stream, maintaining at such zone of atomization the body of liquid coating material with said body having a plurality of closely spaced aligned exposed termini of relatively small area, establishing between the exposed termini of the coating material and the article moving past it an electrostatic field of sufficient strength that it both electrostatically atomizes small particles of coating material from such exposed termini and electrostatically deposits them still in the form of discrete spray particles while still in liquid state for distribution into a continuous finished coating upon the article as it moves past the zone of atomization, and continuously and at a controlled rate maintaining said stream to supply coating material to said body to replace the coating material atomized therefrom by the action of the electrostatic field, said atomization and deposition both being effected in quiescent air, the direction of movement of said article relative to said body of coating material being such as to effect a substantial displacement of the article surface transverse to the general direction of the lines of force of the field during particle deposition to cause such lines of force to sweep such article surface, the spacing of said body of coating material from the article being great enough that the atomized particles will disperse under the action of the field as they move toward the article until they are distributed over and deposited onto a portion of the article surface having an area many times the area of the opposed termini.

11. A method of electrostatically depositing liquid as a coating on an article, comprising the steps of supplying liquid as a film to an extended atomizing zone in spaced relation to the article, atomizing discrete particles of the liquid as a spray from said zone, force feeding the zone with liquid at a controlled rate to replace that atomized, dispersing said particles widely transversely and longitudinally of the extent of the atomizing zone, and creating an electrostatic charge differential between the particles and the article of a strength to move the particles toward the article sufficiently rapidly to deposit them thereon while still in liquid state and while still so dispersed, the movement of the spray particles being through a quiescent atmosphere wherein the electrostatic forces effect deposition on an adjacent article surface of spray particles which would have otherwise not deposited on the article surface, the distance between the article and the atomizing zone being great enough to permit said dispersion of the finely divided liquid spray particles as they proceed toward the article under the influence of electrostatic forces.

References Cited in the file of this patent

UNITED STATES PATENTS

Number	Name	Date
601,594	Simpson et al.	Mar. 29, 1898
705,691	Morton	July 29, 1902
735,638	Wickson	Aug. 4, 1903
805,719	Fitzgerald	Nov. 28, 1905
1,454,376	Gentile	May 8, 1923
1,478,113	Fraser	Dec. 18, 1923
1,638,757	Willé et al.	Aug. 9, 1927
1,740,981	Hampton et al.	Dec. 24, 1929
1,855,869	Pugh	Apr. 26, 1932
1,958,406	Darrah	May 15, 1934
2,097,233	Meston	Oct. 26, 1937
2,191,827	Benner et al.	Feb. 27, 1940
2,217,444	Hill	Oct. 8, 1940
2,224,391	Huebner	Dec. 10, 1940
2,268,622	Rooney et al.	Jan. 6, 1942
2,302,289	Branston-Cook	Nov. 17, 1942
2,354,688	Kimball et al.	Aug. 1, 1944
2,359,476	Gravley	Oct. 3, 1944
2,451,283	Huebner	Oct. 12, 1948

June 4, 1957 W. A. STARKEY ET AL 2,794,417

APPARATUS FOR ELECTROSTATICALLY COATING ARTICLES

Original Filed Sept. 29, 1944 2 Sheets-Sheet 1

FIG. 1

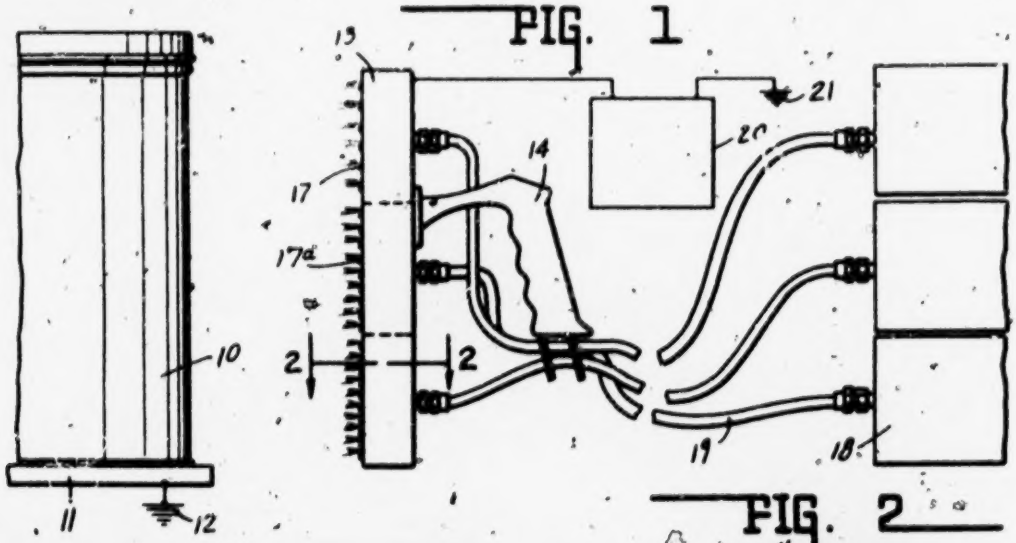

FIG. 2

FIG. 3

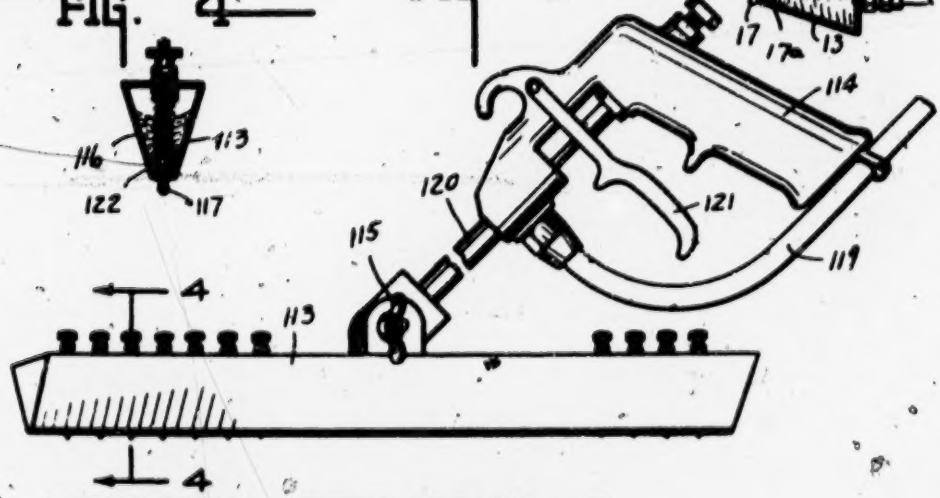

FIG. 4

FIG. 5

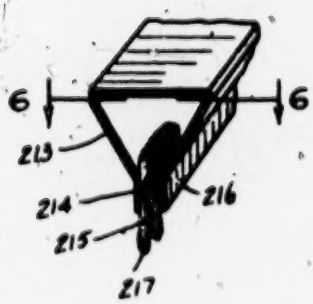

FIG. 6

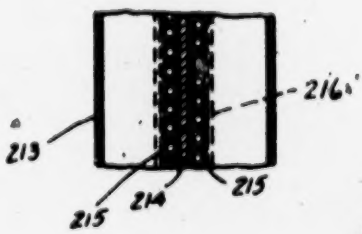

INVENTORS.
EDWIN M. RANSBURG.
WILLIAM A. STARKEY.

BY Harry E. Downer
ATTORNEYS.

1031

June 4, 1957 W. A. STARKEY ET AL 2,794,417

APPARATUS FOR ELECTROSTATICALLY COATING ARTICLES

Original Filed Sept. 29, 1944 2 Sheets-Sheet 2

FIG. 7

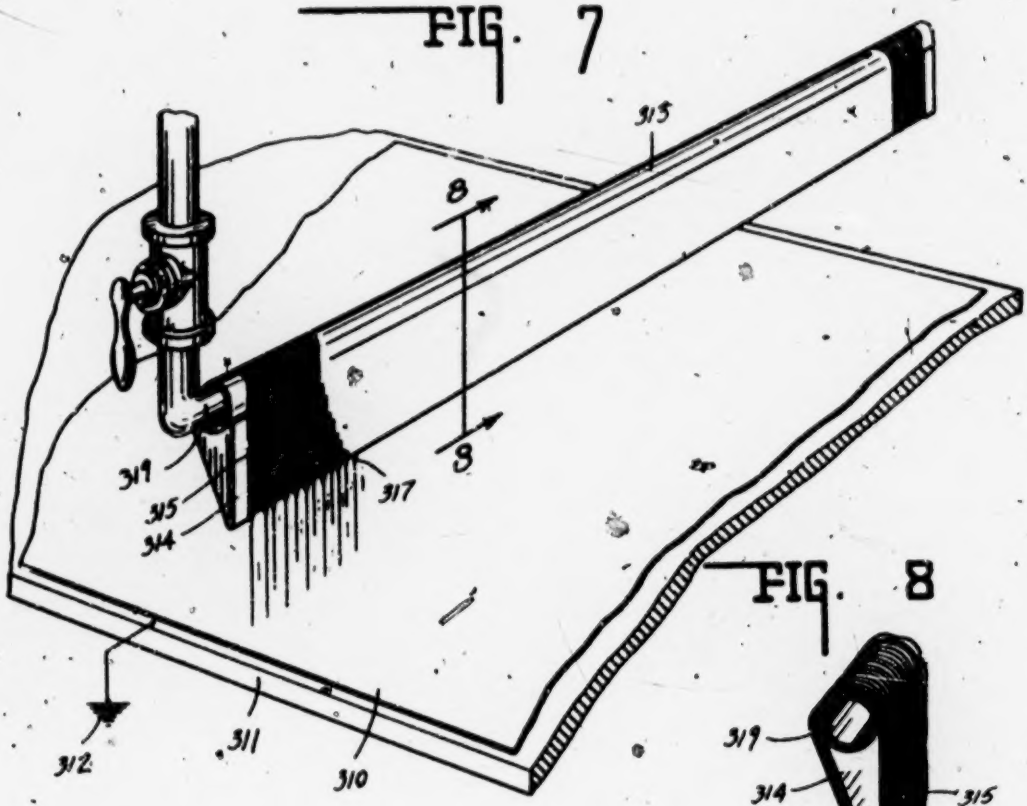

FIG. 8

FIG. 9

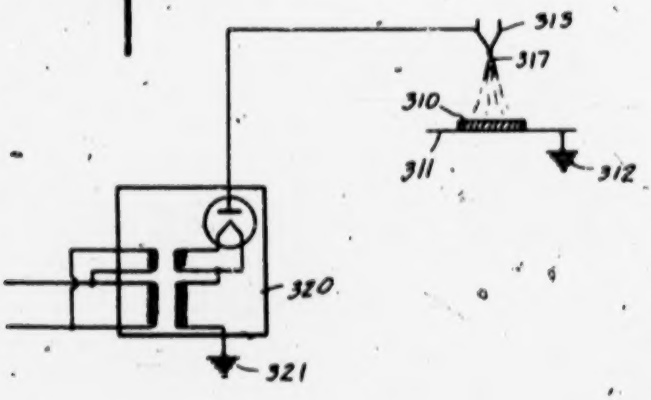

INVENTORS.
EDWIN M. RANSBURG.
WILLIAM A. STARKEY.
BY Harry E Dawes
ATTORNEYS.

United States Patent Office 1033 2,794,417
Patented June 4, 1957

2,794,417

APPARATUS FOR ELECTROSTATICALLY COATING ARTICLES

William A. Starkey (deceased), Columbus, and Edwin M. Ransburg, Indianapolis, Ind., assignors to Ransburg Electro-Coating Corp., Indianapolis, Ind., a corporation of Indiana

Original application September 29, 1944, Serial No. 556,390, now Patent No. 2,685,536, dated August 3, 1954. Divided and this application June 4, 1954, Serial No. 434,366

4 Claims. (Cl. 118—51)

This application is a division of our copending application Serial No. 556,390, filed September 29, 1944, now Patent No. 2,685,536, granted August 3, 1954. That patent describes a method and apparatus for electrostatically coating articles with a liquid coating material such as paint, lacquer, ink, wax and the like. Such articles to be coated may be of either conducting or non-conducting material, may be structural in character or comprise fabric or paper sheets.

This application is particularly directed to forms of apparatus suitable for use in carrying out methods claimed in our aforesaid patent.

In respect to the method of electrostatically coating articles by discharging a spray of coating material from an air operated or air atomizing spray gun reference may be made to such prior patents as Pugh, No. 1,855,859, issued April 26, 1932, for "Method and Apparatus for Coating Articles," and Ransburg and Green, Nos. 2247,963 and 2,334,648, issued July 1, 1941, and November 16, 1943, for "Apparatus for Spray Coating Articles" and "Method of Spray Coating Articles," respectively.

However, in the use of spray guns or the like many disadvantages develop in that the air operated spray gun is limited to a comparatively small field of dispersion, but more important it causes the coating material to be discharged in non-uniform sized particles, and in variable patterns. Thus, there is an uneven dispersion of the coating particles over the surface to be coated due to the inertia generated in the discharge, causing the larger particles to travel further in the field than the more finely divided particles. In some arrangements, depending upon the direction of the discharge, a variable pattern of spray is created and reproduced on the surface to be coated, the heavier coating particles being caused to impinge over one area and the more finely divided particles over another area. By reason of such variance it has been found necessary in practice under certain conditions of coating to arrange a sizable battery of spray guns with particular regard to their variable patterns of coating application so that the several guns complement each other to even out the pattern as a battery.

It is the purpose of our invention to meet this problem of coating articles in an electrostatic field by eliminating the use of such spray guns and employ in place thereof a new method and apparatus for supplying the coating material for electrostatic precipitation upon the surface to be coated. This is accomplished by providing in the field a series or plurality of small inert droplets of coating material and establishing such electrostatic force in the field as to develop and transmit finely divided particles of coating material from said droplets to the surface of the article to be coated. In describing as "inert" the drops or droplets from which atomization takes place, it is our purpose to indicate that during the coating process each drop is supported on the head as above described, and that while the drop may be continuously

giving off liquid for atomization, replacement enables its identity as a supported body of liquid to be maintained.

Such method and apparatus has several important advantages over the spray gun arrangements heretofore employed. The coating material may be introduced into the electrostatic field by an applicator head having a series of orifices through which the material may ooze in the form of inert droplets. Such applicator head may be substantially coextensive with the surface to be coated and thereby take the place of a battery of spray guns as heretofore employed. The droplets will be developed into finely divided particles by the electrostatic force so that all particles will be transmitted or precipitated upon the surface to be coated uniformly over the entire surface.

A feature of the invention, as above described, resides in the applicator head including formation of the discharge orifices therein and the control of the rate of discharge of the material to form the inert droplets at approximately the rate of their electrostatic discharge. Thus, depending upon the viscosity and other characteristics of the material, the control of the applicator head will be such as to permit discharge of just the right quantity and size of the droplets to effect the greatest efficiency in coating a surface.

The full nature of the invention will be understood from the accompanying drawings and the following description and claims.

Fig. 1 is a diagrammatical illustration showing one arrangement of applicator in respect to the article to be coated. Fig. 2 is a section taken on the line 2—2 of Fig. 1. Fig. 3 is a perspective view of a modified form of applicator with a control handle associated therewith. Fig. 4 is a section taken on the line 4—4 of Fig. 3. Fig. 5 is a perspective sectional view showing a portion of a further modification of the applicator head. Fig. 6 is the same as Fig. 5, taken on the line 6—6 thereof. Fig. 7 is a perspective view of a further modification of the applicator head in association with the surface to be coated. Fig. 8 is a section taken on the line 8—8 of Fig. 7. Fig. 9 is a diagrammatical illustration of the circuit and one of the arrangements of the applicator head relative to the article to be coated.

The invention is illustrated by one modification thereof in Figs. 1 and 2 wherein there is shown an article 10 to be coated mounted or carried upon a suitable support or conveyor 11 which is grounded at 12. An applicator head 13 is provided which is preferably substantially coextensive with the surface to be coated. Said applicator head may be fixedly or adjustably mounted on a suitable support, or hand manipulated by a handle 14. The applicator head, as indicated in Fig. 2, is V-shaped in cross section and along its reduced discharge end 17*a* it is provided with a series of orifices 15 through which the coating material indicated at 16 may be oozed out in the form of droplets 17. The applicator head may be connected with a source of supply of coating material by a flexible tube, there being herein illustrated three compartments in the head, each connected with an individual source of supply 18 by a tube 19. The discharge edge 17*a* has an extent many times the maximum cross-sectional dimension of the passageways provided by the tube 19. Sufficient pressure will be created in the containers forming the source of supply 18 for maintaining the material 16 in the head under just the proper pressure to cause the droplets to ooze therefrom as they are dispersed by the applied electrostatic force.

As illustrated, the applicator head is connected to a source of high voltage indicated at 20 through one terminal thereof, the other terminal of said source being grounded at 21 and through ground connected with an article 10 to be coated. Accordingly, the space or field between the applicator head and article 10 is electrostati-

cally charged by reason of the article being grounded and the applicator head being at high potential. The effect thereof is to cause an electrical force to act on the droplets 17, causing them to be broken up into finely divided or minute particles of coating material, such as to be attracted to the grounded article for deposition thereon. Thus, the grounded article may be referred to as a collecting electrode of one potential with the applicator head serving as a discharge electrode of a different potential. It is found that the electrostatic force set up in the field between the electrodes is such as to develop and transmit finely divided particles of the droplets 17 from one electrode to the other. In this connection it will be noted that as the droplets are caused to slowly ooze from the applicator head they are inactive or inert, but subject to being broken up into finely divided particles and distributed over the surface of the opposed electrode. The same action will take place wherein the applicator head may be grounded and the article directly connected with the source of high voltage and thus be charged at a high potential.

Another modification is illustrated in Figs. 3 and 4, wherein the applicator head 113 is adjustably supported by the handle 114 through a pivotal connection secured by thumb nut 115. The hose 119 leading from a source of coating material maintained under pressure, is connected with a valve operated conduit 120 controlled by the finger operated valve 121. Also, the droplets of coating material 117 may be controlled, depending upon the viscosity of the material indicated at 116 by a needle adjustment 122, which needle adjustably controls the orifice through which the material 116 is forced to provide the desired inert droplets.

Figs. 5 and 6 show a further modification of the applicator head indicated at 213. In this head the orifices through which the coating material flows are provided by a plate 214 clamped between opposed rows or needles 215. The needles are cylindrical so that the material will be caused to flow between them, the plate 214 and the clamping walls 216 so as to come out in the form of an inert droplet 217 of coating material. As illustrated in the drawings, the needles are sufficiently close together as to cause the coating material to bridge the spaces therebetween.

In the modification of Figs. 7 and 8 there is illustrated a grounded surface 310 to be coated. This may be a continuously moving sheet of paper or any other article, it being understood that wherein such article or material is non-conducting, it is carried by and on a support or conveyor 311 of grounded conducting material. In this arrangement the applicator head 313 is supported across and above the surface to be coated, and coating material is fed thereto through the valve controlled pipe 319 leading from the source of such material. Said pipe extends through the head, having a series of orifices or openings therein through which the material may drip by gravity. Mounted on and connected to a source of high voltage through the pipe 319, there is a supporting shield 314 extending downwardly and terminating below the pipe to provide a frame for a wire wrapping 315. The coating material accumulates from the drippings into a pocket formed by the wire wrappings, as indicated at 316. The wire wrappings are slightly or sufficiently spaced to permit the coating material to slowly ooze or drip therebetween from the accumulation in the pocket indicated at 316 to form the droplets 317. In this instance the discharge or oozing of the material from the applicator head is aided by gravity, the droplets being thereupon broken up or developed into finely divided particles by the electrostatic force developed between the applicator head and the surface to be coated. Such finely divided particles will thereupon be dispersed by the electrostatic force over said surface and be applied to said surface. The applicator head can be grounded and the work maintained at high potential with equally efficient results.

By way of example, the arrangement of the overhead applicator of Fig. 7 is shown diagrammatically in Fig. 9, wherein the source of high voltage indicated at 320 has one terminal grounded at 321 and the other terminal connected with the applicator head 313 which is thereby maintained at high potential relative to the support or conveyor 311, which is connected with ground at 312.

As above pointed out, it is immaterial as to whether the article or the applicator head comprises the grounded electrode, since the electrostatic force set up therebetween will have the same effect on the droplets of coating material. Also, it is immaterial as to whether or not the article to be coated is of conducting or non-conducting material, and such article of non-conducting material is herein considered to be one of the electrodes wherein it is associated with or masks a grounded support of conducting material.

The invention claimed is:

1. In apparatus for electrostatically applying liquid coating material to an article, an atomizing head positioned adjacent the article to be coated, said head comprising a group of elongated members and means for encasing said members and intimately compacting them together, said members projecting for a portion of their length beyond said encasing means, means for maintaining between said projecting member portions and the article an electrostatic field of sufficient strength both to electrostatically atomize fine particles from coating material on the surfaces of said projecting portions and to electrostatically deposit on the article the particles so atomized, and means for supplying liquid coating material to said members from their encased ends to the surfaces of said projecting portions at a rate no greater than that at which it is electrostatically atomized.

2. In an apparatus for electrostatically coating an article with a liquid coating material, an elongated, hollow applicator head comprising supporting means having thereon a wire wrapping having a series of spaced turns, portions of which constitute projections and the spaces between which constitute restricted orifices through which liquid coating material can flow to the surfaces of said projections, means for supplying liquid coating material to the interior of said head, and means for creating between said head and an article to be coated an electrostatic field of sufficient strength both to electrostatically atomize finely divided particles from coating material on the surfaces of said projections and to electrostatically deposit upon the article the particles so atomized.

3. Apparatus for electrostatically coating an article with a liquid coating material, comprising a conveyor for moving the article over a predetermined path, a single-fluid atomizing head provided with a liquid supporting, flow-guiding surface having a terminus adjacent which liquid coating material is to be atomized, means for supplying liquid coating material at a controlled rate to said surface at a point spaced rearwardly from said terminus for flow as an exposed body over the surface to said terminus for atomization therefrom, and means including a high-voltage source having its opposite terminals electrically connected to the article on the conveyor and the liquid at said terminus for establishing an electrostatic field therebetween capable of atomizing the liquid from said exposed body at said terminus in the form of a spray and electrostatically depositing the spray on the article while still in liquid state, said head and conveyor being spaced apart by a distance great enough to permit the atomized liquid leaving said member to be widely dispersed.

4. Apparatus for electrostatically spray-coating an article, comprising an atomizing head, means for feeding liquid coating material to said head, means including said feeding means for distributing coating material to an extended atomizing zone where it is atomized from a plurality of spaced points, said points being sufficiently close together to permit the coating material to bridge the spaces therebetween, a support for supporting an arti-

to be coated in spaced relation to said atomizing zone, and means including a high-voltage source for creating over the surface of the article on said support an electrostatic field capable of atomizing the coating material into finely divided, electrically charged particles and electrostatically depositing particles atomized from said atomizing zone on the article while still in liquid state, said atomizing head and support being so relatively disposed as to provide between the article and the atomizing zone a spacing great enough to permit substantial dispersion of the atomized particles by the electrostatic forces of the field.

References Cited in the file of this patent

UNITED STATES PATENTS

1,153,004	Althouse	Sept. 7, 1915
2,097,233	Meston	Oct. 26, 1937
2,187,306	Forshals	Jan. 16, 1940
2,251,931	Gundelfinger	Aug. 12, 1941
2,685,536	Starkey et al.	Aug. 3, 1954

1037

Jan. 11, 1944. J. S. SMYSER Re. 22,419

METHOD FOR MAKING ABRASIVE ARTICLES AND APPARATUS THEREFOR

Original Filed Feb. 7, 1924 2 Sheets-Sheet 1

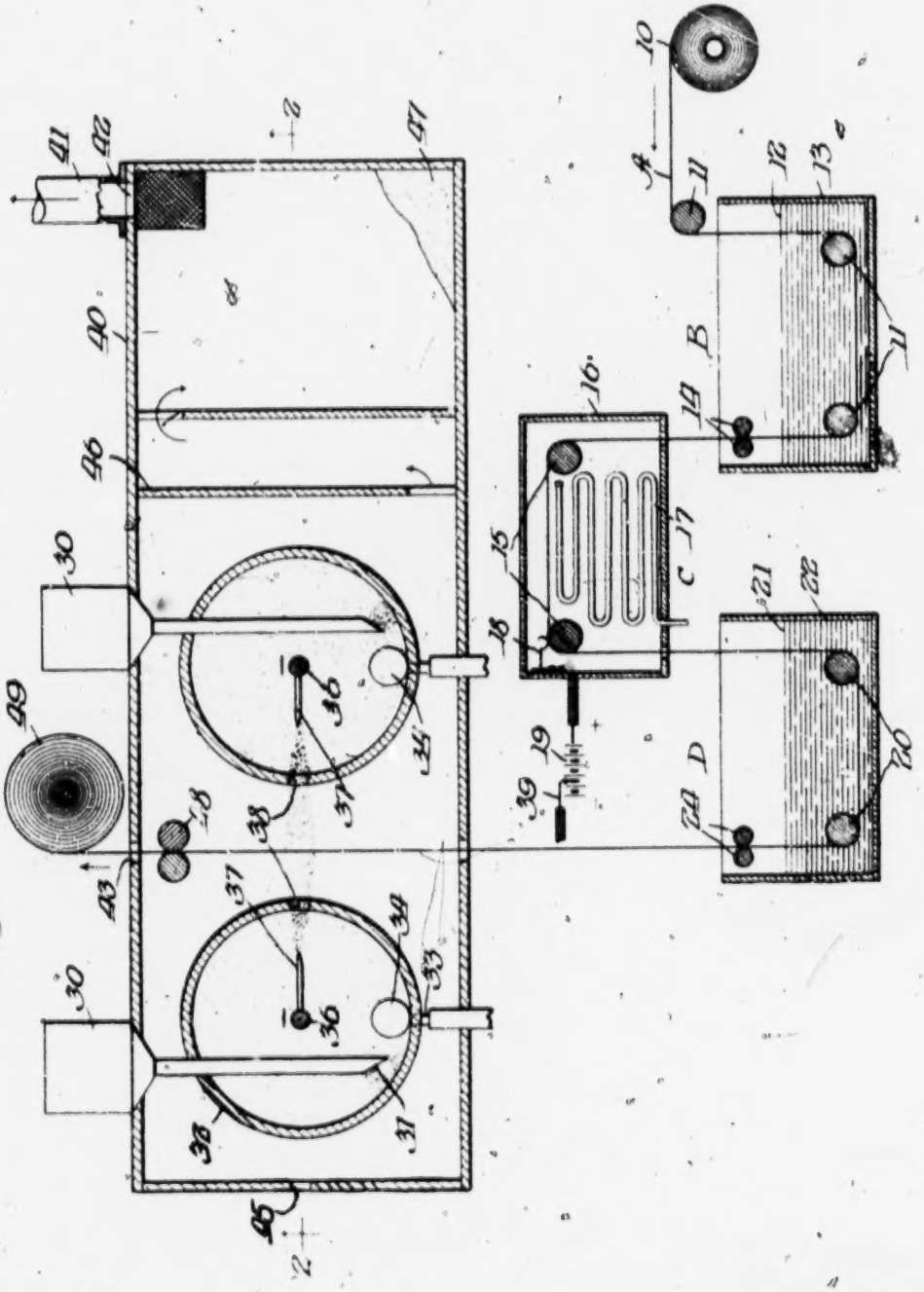

Fig. 1.

Witness:
A. L. Davison

Inventor:
James S. Smyser
By Paine Carpenter
Atty

1039

Jan. 11, 1944. J. S. SMYSER Re. 22,419

METHOD FOR MAKING ABRASIVE ARTICLES AND APPARATUS THEREFOR

Original Filed Feb. 7, 1924 2 Sheets-Sheet 2

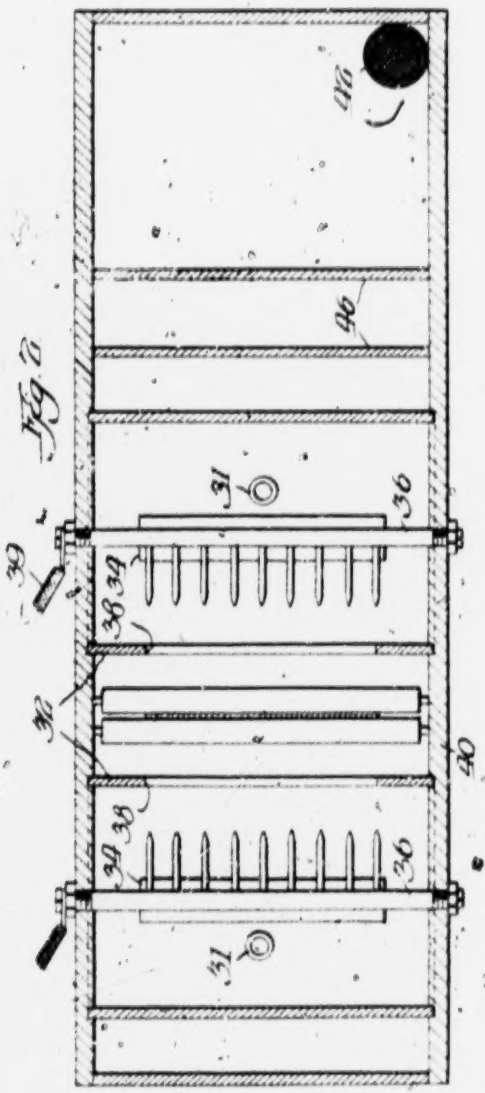

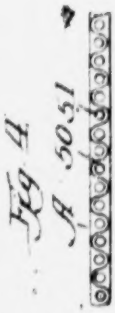

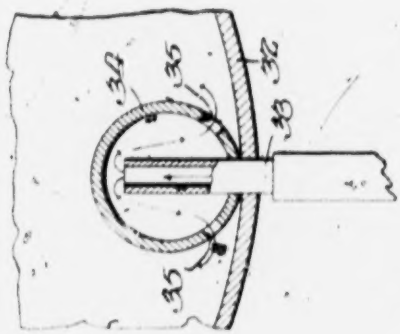

Witness:
R. B. Davis

Inventor
James S. Smyser
By Paul Carpenter Atty

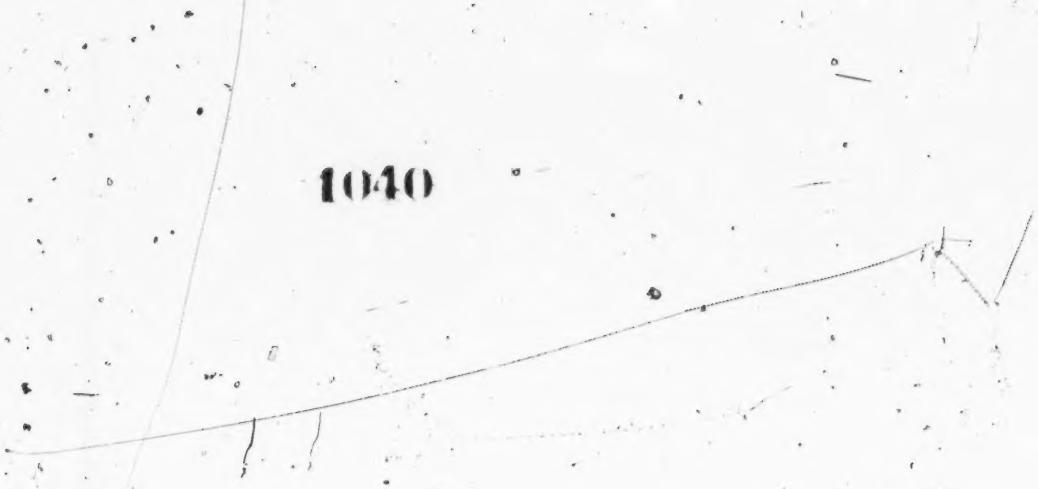

UNITED STATES PATENT OFFICE

22,419

METHOD FOR MAKING ABRASIVE ARTICLES AND APPARATUS THEREFOR

James S. Smyser, Boston, Mass., assignor to Minnesota Mining & Manufacturing Company, St. Paul, Minn., a corporation of Delaware

Original No. 1,788,600, dated January 13, 1931, Serial No. 691,149, February 7, 1924. Renewed April 14, 1936. Application for reissue April 24, 1931, Serial No. 532,674.

59 Claims. (Cl. 117—17)

This invention relates to articles of manufacture consisting of a support, and a layer of comminuted material deposited thereon; and more particularly to producing and maintaining the physical union of the material and the support. The invention is especially useful in coating strips or sheets of fabric, paper or the like with abrasive particles as hereinafter described in connection with illustrative embodiment.

Objects of my invention are to provide a simple, and efficient method of producing an abrasive surface on a fabric or other article serving as a base, without materially affecting the flexibility or strength of the article; to provide an electrostatic method of continuously, and progressively producing an abrasive coating on a sheet of fabric, or other article, as it is moved in substantially the direction of its surface; to provide an improved coated fabric or other article; and generally to provide an improved method of and apparatus for producing an abrasive coating on an article.

In one aspect my invention contemplates electrostatically applying an abrasive coating to a fabric, or other article serving as a base, by electrostatically projecting abrasive particles into engagement or binding contact with the article being coated, and then forcing the engaged particles into more intimate engagement with the article.

In another aspect, an abrasive coating is electrostatically applied to an electrically non-conducting article by providing a conducting path extending over the article, applying a coating of binding material to the article, and bombarding the last applied coating by a stream of abrasive particles electrostatically charged oppositely to the conducting path of the article.

In still another aspect, the invention provides a fabric or other article coated with a conducting material having a superposed coating of binder material upon which there is deposited a coating of granular material.

The article, when in sheet form, may be coated by moving the sheet continuously in substantially the direction of its surface; dipping a portion of the sheet into a liquid bath having comminuted conducting material in suspension, to coat the sheet; drying the liquid from the coating to leave a conducting path over the surface of the sheet; making a sliding contact between the conducting portion of the sheet and one terminal of a source of electromotive force; dipping the sheet in a liquid bath of binding material to leave a coating of the binder on the sheet; equalizing the distribution of the binder coating on the sheet; moving the sheet through a stream of abrasive particles which are electrostatically charged by the source of electromotive force with a sign opposite to that of the conducting path of the sheet; equalizing the distribution of abrasive particles over the surface of the sheet, and forcing the particles into more intimate engagement with the sheet.

Methods and apparatus illustrating a species, of which my invention is a genus, are described more fully hereinafter in connection with the accompanying drawings, in which:

Fig. 1 is an elevation, in section diagrammatically showing apparatus for preparing an abrasive coating on a sheet of fabric;

Fig. 2 is a plan of a portion of Fig. 1;

Fig. 3 is an enlarged view of a portion of Fig. 1;

Figs. 4, 5, 6 and 7 are cross sections of a fabric in successive stages, respectively, of the coating operations.

In Fig. 1 the sheet A of fabric, paper, or similar material, is moved substantially in the direction of its surface and directed by rollers so that it passes continuously through a series of zones B, C, D and E, in each one of which the sheet is subjected to a different operation.

The sheet A feeds from the roll 10 in the direction indicated by the arrow into the coating zone B where it passes around rollers 11, and dips into the liquid bath 12 in tank 13, the liquid having in suspension granular or comminuted graphite or other conducting material. The liquid is preferably non-corrosive and without appreciable physical or chemical effect upon the sheet when used primarily to suspend the conducting particles; it may be water or other suitable liquid. The sheet passes between the rollers 14 which remove the excess of the mixture from the sheet, resulting in a substantially uniform distribution of conducting material throughout. The rollers 15 direct the sheet through a drying zone C within the chamber 16, having a heating element 17, such as a steam pipe, or other heater. The liquid upon drying from the coating on the sheet leaves the conducting material distributed over the surface as a conducting path. The brush 18 in contact with the sheet is connected to the positive terminal of the source of electromotive force 19 which electrifies the conducting path of the sheet with a charge of positive sign.

Rollers 20 direct the sheet through the zone D, in which, a coating of binding material is applied to the sheet as it dips into the liquid bath 21 of binding material, such as paraffin, or other suit-

able binder, preferably electrically non-conducting, in tank 22, heated by a steam pipe (not shown), or other suitable means. The rollers 24 remove the excess liquid and distribute the coating uniformly over the surface to equalize its thickness.

In the zone E, a coating of abrasive is electrostatically applied to the sheet. The hoppers 30 for containing abrasive particles of emery, carborundum, pumice, or other suitable abrasive material having the size of particle with which it is desired to coat the sheet, discharge through spouts 31 into the cylindrical electrifying chambers 32, preferably of electrically insulating material, disposed on opposite sides of the upwardly moving sheet. The nozzles 33 discharge air into the conduits 34 (see Fig. 3), these conduits having apertures 35 which admit the moving air at suitable pressure to the abrasive container 40 to produce a condition in which the abrasive particles are temporarily suspended in the atmosphere of the container into which the particles enter through orifices 38 into the zone of the electrical discharge, which takes place between the needles 37 mounted on bus-bars 36 and the conducting sheet.

Bus bars 36 are connected preferably to the negative terminal of source of electromotive force 19 by means of leads 39, the effective potential of the source 19 being adjusted to such a value, e. g. 18,000 volts, more or less, than the abrasive particles in chamber 32 become electrified with a negative charge, and together with the air admitted through nozzle 33 discharge through slot 38 as a stream of electrified particles which are electrostatically propelled toward the positively charged sheet A, the solid particles bombarding and coming into engagement with the binder coating on the sheet. It will be seen that the electrostatically propelled abrasive particles emerging from each of the orifices 38 become deposited as a thin blanket on the sheet A as it passes through the discharge zone.

The housing 40 for apparatus in the zone E prevents loss of the abrasive particles which fail to become attached to the sheet A, and is preferably constructed of insulating material. Conduit 41 is connected to an exhaust pump (not shown) and exhausts air from the housing 40 in the direction indicated by the arrow, the end of conduit 41 being covered by a screen 42 which sifts the abrasive particles from the air before entering the conduit. Air free from abrasive particles is admitted through openings 43, 44 and 45, thus tending to clarify the air within the housing and together with the air discharged through slots 38 causing a flow of the air and drift of the abrasive particles around the baffle diaphragms 46 as indicated by the arrows, the baffles tending to cause a precipitation of the particles at one end of the housing as indicated by the accumulation 47 which also includes the abrasive sifted by the screen 42. Owing to the reduced air pressure in housing 40 when air is exhausted through conduit 41, air may be fed through nozzles 33 directly from the atmosphere, but if a greater flow is desired compressed air may be fed through these nozzles.

Rollers 48 between which the sheet passes, after being coated with the abrasive, equalizes the distribution of abrasive material on the surface of the sheet and forces the abrasive particles into more intimate engagement with the sheet which then passes upward and is wound on the roll 49. The sheet may be propelled by rotation of the roll 49 or one or more of the rollers with which the sheet contacts between rolls 10 and 49.

Figure 4 shows the appearance of a simple fabric sheet A, of electrically insulating or poorly conducting material, having a warp 50 and a woof 51, before the sheet has entered the coating zone B. Fig. 5 shows the particles 52 of graphite or other conductor distributed over the surface of the fabric after the liquid from the batch 12 has been evaporated from the surface in the drying zone C and before the sheet has entered the coating zone D. Fig. 6 shows the sheet A with the coating 53 of paraffin, or other binding material before the sheet enters the coating zone E. Fig. 7 shows the completed abrasive sheet having a coating 54 of abrasive particles distributed over the binder coating on each side of the sheet A.

By virtue of the electrostatic charges upon the abrasive particles as they pass to the fabric they are held apart by electrostatic repulsion and consequently are distributed far more effectively than is possible without the use of an electrostatic field. Thus the abrasive material may be deposited in any degree of depth, from an extremely thin deposit approximately one particle thick to a thick deposit, and in any case the particles are distributed with great uniformity. By coating the fabric upon both sides its usefulness is practically doubled and by virtue of the roughness of the rear side the article can be used more effectively with less danger of slippage in the fingers.

While certain materials have been mentioned in disclosing an example of how the invention may be carried out, it is to be understood that the materials specifically named are not necessary to the invention but may be replaced by other suitable materials. It is obvious that the sheet may be treated in the various zones B, C, D and E by various modifications of the apparatus disclosed within the knowledge of those skilled in the art.

The method, and apparatus disclosed for carrying out the method, permit of producing an abrasive coating on sheet fabric or other articles, particularly those in which it is desired to provide a certain degree of elasticity or flexibility, without objectionably stiffening the sheet or otherwise materially affecting those properties of the sheet which it is desired to preserve.

Owing to the more commonly elongated nature of abrasive particles, they tend to align themselves in the electrical field and are thus projected or bombarded against the adhesive coating with their longer dimension perpendicular thereto, thus permitting a nesting of the particles with respect to each other in the adhesive coating. Furthermore this permits of the adhesive coating exercising its capillary attraction, so that it will more readily rise along the sides of each individual abrasive particle and catch and hold additional particles subsequently applied before setting of the adhesive.

One of the inherent characteristics of the article produced by the improved method and apparatus disclosed herein resides in the fact that a major portion of the abrasive particles embed themselves in the adhesive coating and assume positions with their greater dimensions perpendicular or substantially perpendicular to the plane of the carrier, that is a sheet of fabric or paper as the case may be. Thus I am enabled to provide an abrasive article wherein the abrasive particles of grit may be applied in greater number to a predetermined area with a given quantity of adhesive than in the case of any other method or

article known to me. I have, therefore, provided a new article of manufacture wherein the cutting edges or points of the abrasive particles are presented toward the surface to be abraded and materially enhance the efficiency of the abrasive article such as increasing its cutting ability and as well as its ability to keep clean.

I have found my improved method and apparatus peculiarly useful for the production of abrasive articles in view of the further following considerations. Abrasive particles present relatively sharper points or edges and, likewise, relatively less sharp portions. Where the particles are given an electrostatic charge, the density of the charge is greater at the points or edges than on any relatively more or less flat part of the surface of the particle. For this reason, the particle projected electrostatically aligns itself so that the sharpest point or edge points in the direction of the electrostatic field as it arrives at the adhesive coated surface. Inasmuch as I direct the electrostatic field I employ so that it acts perpendicularly to the surface coated with the adhesive, the particle acted upon so attaches itself to the adhesive surface as to present its sharpest cutting edge or point outwardly of the surface and in the direction of the electric field.

I am thereby enabled to produce an abrasive coating of extraordinary sharpness even with particles which are not necessarily markedly elongated, as well as when I employ the more common abrasive particles of an elongated contour. Thus I am enabled to attain an alignment of particles by means of an electrical field which affords a surface coated abrasive presenting the greatest number and most effective cutting points and edges known to me and one characterized by extraordinary cutting ability.

In the claims where I have referred to the abrasive particles being dispersed with major effectiveness for abrasively coating said backing, I mean to include the result produced in depositing grit or abrasive particles under the influence of an electrical field such as an electrostatic field to which effect I attribute a tendency to an orientation, positioning or displacement of the abrasive particles with the longer axes more or less perpendicular to the backing.

Reference is made to my divisional application Serial No. 640,978, filed Nov. 3, 1932, for Abrasive articles, wherein the article is claimed.

I claim:

1. Apparatus for applying coatings to electrically non-conducting sheet material, comprising means for feeding the sheet in substantially the direction of its surface, means for coating the moving sheet with a conducting material, means for applying a coating of binder material over said conducting coating, and means for electrostatically bombarding the binder coating with electrically charged particles to produce a coating upon said binder coating.

2. Apparatus for applying coatings to electrically non-conducting sheet material, comprising means for propelling the sheet substantially in the direction of its surface, means for applying to the sheet a coating of liquid having conducting particles in suspension, means for drying the liquid to leave conducting particles as a coating on the sheet, means for applying a coating of binder material to the sheet, and means for electrically projecting a stream of granular matter into engagement with the binder coating to apply a superficial coating to the sheet.

3. The method of electrostatically depositing a coating upon an article comprising agitating granular matter in the presence of an electric field, confining movements of the agitated particles to a restricted zone, and electrostatically projecting the electrified particles outwardly from the restricted zone to the object to be coated.

4. The method of preparing an abrasive coating on fabric or similar material, which comprises continuously moving the sheet in substantially the direction of its surface, progressively dipping the sheet in a liquid bath having finely divided conducting material in suspension, drying up the liquid left as a coating on the sheet and leaving the suspended particles deposited on the sheet to form a conducting path over the surface of the sheet, coating the sheet with a binder, equalizing the thickness of the binder coating, electrostatically projecting a stream of abrasive particles against the sheet, and forcing the abrasive particles into closer engagement with the sheet.

5. The method of preparing an abrasive coating on a sheet of fabric or similar material, which comprises moving the sheet substantially in the direction of its surface, dipping the sheet in a liquid bath having comminuted conducting material in suspension, drying up the liquid left as a coating on the sheet and leaving the suspended material deposited to form a conducting path over the surface of the sheet, dipping the sheet in a bath of liquid binding material, and electrostatically depositing a coating of abrasive particles on the binder.

6. The method of preparing an abrasive coating on a sheet of fabric or similar material, which comprises passing the sheet through a liquic having comminuted conducting material in suspension, withdrawing the sheet from the liquid and drying the liquid to leave a coating of conducting material on the sheet, coating the sheet with a binding material, and electrostatically projecting abrasive particles into engagement with the coating of binding material.

7. The method of preparing an abrasive coating on a sheet of fabric or similar material, which comprises coating the sheet with an electrically conducting material electrostatically projecting abrasive particles into engagement with the sheet and forcing the engaged abrasive particles into more intimate engagement with the sheet.

8. The method of preparing an abrasive coating on a sheet of fabric or similar material, which comprises continuously moving the sheet in substantially the direction of its surface, progressively coating the sheet with a liquid having comminuted conducting material in suspension, progressively drying the liquid to leave the suspended material as a conductive coating on the sheet, progressively coating the sheet with a binding material, and progressively bombarding the sheet with a stream of abrasive particles electrically charged oppositely to the conducting coating of the sheet.

9. The method of preparing an abrasive coating on a sheet of fabric or similar material which comprises continuously moving the sheet in substantially the direction of its surface, progressively depositing a conducting coating on the sheet, projecting a stream of abrasive particles electrified oppositely to the conducting coating into engagement with the sheet, and securing the engaged abrasive particles into more intimate engagement with the sheet.

10. The method of preparing an abrasive coating on an electrically non-conducting base, which comprises coating the base with an electrically

conducting material, coating the conducting material with a binding material, and electrostatically projecting a stream of abrasive particles into engagement with the binder coating.

11. The method of making an abrasive article which comprises rendering a sheet of fabric or the like both conductive and adhesive and by oppositely charging the conductive sheet and comminuted abrasive material adjacent thereto, electrostatically depositing a layer of said material upon the adhesive surface thereof.

12. The method of coating a sheet of material with abrasive particles which comprises rendering the sheet both conductive and adhesive and, by oppositely charging the conductive sheet and abrasive particles in the region of the sheet, electrostatically depositing the abrasive particles upon the adhesive surface of the sheet.

13. The method of coating a sheet of material with abrasive particles which comprises rendering the sheet both conductive and adhesive, continuously agitating a supply of abrasive particles in an enclosed region, continuously feeding the sheet along a path associated with said region, and by oppositely charging the conductive sheet and abrasive particles in said region electrostatically embedding the particles upon the adhesive surface of the sheet.

14. Apparatus for applying adhesive material to an electrically conducting surface and depositing thereon finely divided particles under the influence of an electrostatic field, comprising means for moving the surface in substantially the direction of its length, means for applying adhesive material to the surface, and means for electrostatically bombarding the adhesive material with electrically charged particles to produce a coating upon said adhesive material.

15. Apparatus for applying finely divided particles to a surface previously rendered electrically conducting and adhesive, comprising means for producing an electrostatic field in a region containing finely divided particles and means for moving the surface through said electrostatic field.

16. The method of electrostatically depositing finely divided material particles upon an article, which comprises establishing an electrostatic field, dispersing the finely divided material particles to form a suspension in a region containing the electrostatic field, confining movements of said particles to a restricted zone and electrostatically projecting them to the article to be coated.

17. The method of spreading an abrasive coating on a sheet of fabric or similar material which comprises treating the sheet to render it electrically conductive and mechanically adhesive, establishing an electrostatic field of force between the surface to be coated and a charged conductor of opposite polarity to that of the sheet and adjacent thereto, conveying finely divided abrasive particles into the electrostatic field of force and moving the surface progressively and in substantially its own plane through the electrostatic field of force whereby the abrasive particles may, by the action of the electrostatic field of force upon them, be deposited thereon.

18. The method of spreading a coating of finely divided particles on a sheet of fabric or similar material which comprises treating the sheet to render it electrically conductive and mechanically adhesive, establishing an electrostatic field of force between the surface to be coated and a charged conductor of opposite polarity to that of the sheet and adjacent thereto, conveying the finely divided particles into the electrostatic field of force, and moving the surface progressively and in substantially its own plane through the electrostatic field of force whereby the finely divided particles may, by the action of the electrostatic field of force upon them, be deposited thereon.

19. Apparatus for depositing finely divided particles on the surface of a fabric or other material comprising means for treating the fabric to render it electrically conductive and mechanically adhesive, means for establishing an electrostatic field of force between two electrodes of opposite polarity one of which is in electrical contact with the surface of the fabric, means for conveying the finely divided particles into the electrostatic field of force where, under its influence, they will be deposited on the surface of the fabric, and means for progressively moving said surface in substantially the direction of its length.

20. Apparatus for depositing finely divided abrasive particles on the surface of a fabric or other material comprising means for treating the fabric to render it electrically conductive and mechanically adhesive, means for establishing an electrostatic field of force between two electrodes of opposite polarity one of which is in electrical contact with the surface of the fabric, means for conveying the finely divided abrasive particles into the electrostatic field of force where, under its influence, they will be deposited on the surface of the fabric, and means for progressively moving said surface in substantially the direction of its length.

21. The method of coating, with pulverized material, a surface that is both electrically conductive and mechanically adhesive comprising establishing an electrostatic field of force between two electrodes of opposite polarity one of which is in electrical contact with the surface to be coated, conveying the pulverized material into the electrostatic field of force under the action of which it will be translated to the surface to be coated, and subjecting successive parts of the surface to the combined action of the electrostatic field of force and the pulverized material in a manner that will be substantially continuous.

22. The method of coating, with finely divided abrasive material, a surface that is both electrically conductive and mechanically adhesive comprising establishing an electrostatic field of force between two electrodes of opposite polarity one of which is in electrical contact with the surface to be coated, conveying the finely divided abrasive material into the electrostatic field of force under the action of which it will be translated to the surface to be coated, and subjecting successive parts of the surface to the combined action of the electrostatic field of force and the finely divided abrasive material in a manner that will be substantially continuous.

23. The method of spreading a coating of finely divided material upon an electrically conductive surface, which comprises establishing an electrostatic field of force between two electrodes of opposite polarity, one of which is in electrical contact with the surface to be coated, conveying the finely divided material into the electrostatic field of force under the action of which it will be translated to the surface to be coated, and bonding the finely divided material to the surface to be coated.

24. In the manufacture of abrasives, the improved method which consists in providing a carrier having a surface coated with an adhesive, depositing finely divided abrasive material upon said surface and dispersing the particles by the action of an electrical field as they are being deposited upon the surface.

25. In the manufacture of abrasives, the improved method which consists in depositing abrasive particles upon a carrier surface, providing an adhesive material for retaining the particles on the carrier, and dispersing the particles by the action of an electrical field as they are applied to the carrier.

26. In the manufacture of abrasives, the improved method which consists in providing a carrier having a surface coated with an adhesive, depositing finely divided nonmagnetic abrasive material upon said surface and dispersing the particles upon the surface by the action of an electrical field.

27. In the manufacture of abrasives, the improved method which consists in providing a carrier having a surface coated with an adhesive, directing abrasive particles toward said adhesively coated surface, and controlling the position of the particles relative to one another on the carrier by an electrical field.

28. In the manufacture of abrasives, the improved method which consists in providing a carrier having a surface coated with an adhesive, directing abrasive particles toward said adhesively coated surface, and controlling the position of the particles relative to one another in their path to the carrier and on the carrier by an electrical field.

29. Apparatus for the manufacture of abrasives, comprising means for supporting a carrier having a surface coated with an adhesive adapted to receive and retain abrasive particles, means for supplying abrasive particles and directing the same toward said surface, and an electrical field disposed in the path of said particles so as to control the arrangement of the same relative to one another at the time they are deposited upon the carrier.

30. In the manufacture of abrasives the improved method of depositing abrasive particles upon a carrier surface which includes providing an adhesive material for retaining the particles on the carrier and projecting the particles substantially longitudinally of their axes by the action of an electric field as they are applied to the carrier.

31. In the manufacture of abrasives the improved method of depositing particles upon a carrier surface which includes providing an adhesive material for retaining the particles on the carrier, forming a suspension of said abrasive particles in a defined zone, and projecting particles from said zone onto the carrier by the action of an electrical field.

32. In the manufacture of abrasives the improved method of depositing particles upon a carrier which includes providing an adhesive material for retaining the particles on the carrier and projecting the particles onto the carrier by the action of an electrical field independently of mechanical pressure.

33. In the manufacture of abrasives, the improved method of depositing particles upon an adhesive carrier which includes moving the particles into adhesive engagement with the carrier in spaced relationship to each other the deposition being effected under the influence caused by the action of electrical force creating an electrical field affecting the spaced relationship of the particles aforesaid.

34. In the manufacture of abrasives, the improved method of depositing particles upon an adhesive carrier which includes moving the particles into adhesive engagement with the carrier in substantially a single layer the deposition being effected under the influence caused by the action of electric force creating an electrical field affecting the particles in the movement aforesaid.

35. In the manufacture of abrasives, the improved method of depositing particles on an adhesive carrier which consists in moving the particles into adhesive relation with the carrier, the deposition being effected under the influence caused by the action of electric force creating an electrical field affecting the particles in the movement aforesaid.

36. In the manufacture of abrasives, the improved method of depositing particles of elongated character thereby having different degrees of effective cutting portions upon a carrier which includes providing an adhesive material for retaining the particles on the carrier and projecting the particles onto the carrier, the deposition being effected under the influence caused by the action of an electrical field acting perpendicular to the surface of the carrier whereby they are deposited on the carrier with their major effective cutting portions in the direction of the electrical field.

37. In the manufacture of abrasives, the improved method of depositing the abrasive particles upon a carrier surface which includes providing an adhesive material for retaining the particles on the carrier and projecting the particles onto the carrier by the action of an electrical field established by a high potential.

38. In the manufacture of abrasives, the improved method of depositing particles upon a carrier which includes providing an adhesive material for retaining the particles on the carrier and projecting the particles onto the carrier by the action of an electrical field and controlling the quantity of the particles deposited on the carrier by variation in the quantity of the particles brought within the electrical field.

39. In the art of making flexible abrasives, the provision of a continuously flexible carrier web, applying a hardenable adhesive material to said carrier web, progressively feeding said carrier web while the adhesive is soft and receptive into the presence of a supply of pulverulent abrading material, activating the abrading material adjacent to the carrier to form an extended arrangement of particles, and impressing an electrical field on such activated abrasive material for moving it onto the carrier with the major portion of the individual particles thereof having their longitudinal axes substantially perpendicular to the carrier web.

40. In the art of making flexible abrasives, the provision of a continuously flexible carrier web, applying a hardenable adhesive material to said carrier web, progressively feeding said carrier web while the adhesive is soft and receptive into the presence of a supply of pulverulent abrading material, activating the abrading material adjacent to the carrier to form an extended arrangement of particles, directing the thus activated particles into a predetermined zone adjacent to said carrier web, and impressing an electrical field on the thus activated abrasive

particles for moving them into intimate adhesive engagement with the carrier web.

41. In the manufacture of abrasives, the improved method which consists in providing a carrier having a surface coated with an adhesive, depositing finely divided abrasive material upon said surface by an electrical field, the particles being thereby held apart and consequently more effectively distributed as they are deposited upon said surface carrying said adhesive.

42. In the manufacture of abrasives, the improved method which consists in providing a carrier having a surface coated with an adhesive, coating the adhesive surface with the abrasive by passing the abrasive particles to the carrier and holding them apart by an electrical field whereby they are projected onto the carrier in spaced relationship relatively to each other.

43. An apparatus for the manufacture of coated carriers comprising means for supplying a controlled feed of finely divided solid material adapted to be dispersed by an electrical field, means for supporting an adhesively surfaced carrier to be coated, and means for producing an electrical field to disperse the individual particles of finely divided material upon said adhesive surface as the material is supplied thereto.

44. An apparatus for the manufacture of coated carriers comprising means for supplying a controlled feed of finely divided solid material adapted to be dispersed by an electrical field, means for supporting and causing to travel adjacent said supply means an adhesively surfaced carrier to be coated, and means for producing an electrical field to disperse the individual particles of finely divided material upon said adhesive surface as the material is supplied thereto.

45. In the manufacture of abrasives, the improved method which consists in providing a carrier having a surface coated with an adhesive, depositing finely divided abrasive material upon said surface and through the medium of an electrical field controlling the arrangement of the abrasive particles on the adhesive surface to cause the same to be substantially uniformly oriented with their major axes at substantially right angles to the adhesively coated carrier surface.

46. The process of making abrasive material which includes the step of depositing abrasive particles upon an adhesively coated backing, dispersing the individual particles and orienting them with major effectiveness for abrasively coating said backing by means of an electrical field.

47. The process of making abrasive material which includes the step of depositing abrasive particles upon an adhesively coated backing, dispersing and holding the individual particles apart whereby orientation thereof is accomplished with major effectiveness for abrasively coating said backing by means of an electrical field.

48. That step in the manufacture of abrasives to adhesively unite the abrasive to a carrier which comprises depositing finely divided abrasive material upon a carrier and through the medium of an electrical field controlling the arrangement of the abrasive particles on the carrier to cause the same to be substantially uniformly oriented with their major axes at substantially right angles to the carrier.

49. In the manufacture of abrasive including adhesively united abrasive particles forming an abrading surface, the step which comprises depositing finely divided abrasive particles and through the medium of an electrical field controlling the arrangement of the abrasive particles to cause the same to be substantially uniformly oriented with their major axes substantially at right angles to said surface.

50. In the manufacture of abrasives, the improved method which consists in providing a carrier, directing abrasive particles toward said carrier, controlling the position of the particles relative to one another in their path to the carrier by an electrostatic field and varying the relative positions of the particles in said path by adjusting the electrical field to such a value as to electrostatically propel the particles as desired.

51. A method of applying a finish to an article of manufacture, consisting in producing a uni-directional current of high voltage in an atmosphere, introducing a coating material in a finely divided form into the atmosphere, and subjecting the article of manufacture to be coated to the current and the atmosphere for a predetermined period of time to cause electrical deposition of the material upon the article of manufacture.

52. A method of applying a finish to an article of manufacture, consisting in enclosing a space of predetermined size, introducing into the enclosed atmosphere a coating material in a finely divided form, conveying the article of manufacture to be coated through the enclosed atmosphere, and subjecting the article of manufacture and the coating material to a difference of electrical potential to cause the coating material to be deposited on the article of manufacture.

53. The method of making sandpaper and other products coated with elongated particles which comprises separating elongated particles into a separated and temporarily suspended condition from a bulk source of supply by a force applied to said particles fed from said source, then introducing the particles so separated and suspended into a position between an impelling force comprising an electrical field and an adhesive coated backing, the particles thereby being presented into the position aforesaid to permit the particles to alter their position in respect of each other and then causing the particles to adhere substantially normally to the backing by the application of the electrical impelling force to said particles so introduced in the condition aforesaid.

54. The new article of manufacture comprising apparatus for forming a coating of abrasive and other pulverulent elongated particles upon an adhesively coated surface which includes, in combination, a hopper for said particles, and means acting upon the particles fed from said hopper causing the particles to be arranged in a separated and temporarily suspended condition, said means including additional means directing said particles towards said surface and which confines the movement of the particles within a zone ineffective alone to coat the surface towards which said particles have been directed by said means, and comprising an electrical field for impelling said particles from said zone against said adhesively coated surface to cause adhesion of said particles substantially normally to said surface.

55. The method of coating, with finely divided material, an article which is electrically conduc-

tive and has a mechanically adhesive surface comprising establishing an electrostatic field of force between two electrodes of opposite polarity, one of which is in electrical contact with the surface to be coated, introducing finely divided material into the electrostatic field of force under the action of which it will be translated to the surface to be coated and subjecting the surface to the combined action of the electrostatic field of force and the finely divided material for sufficient time to enable it to be substantially uniformly coated.

56. In the manufacture of an article having a coated surface, the improved method which consists in providing a carrier with an adhesive surface, introducing into the region of the adhesive surface, a finely divided coating material, depositing and arranging the finely divided coating material upon the adhesive surface by the action of an electrical field.

57. In the manufacture of articles having coated surfaces, the improved method of arranging finely divided material upon a surface which is mechanically adhesive, which comprises establishing an electrical field between electrodes of opposite polarity, disposing the surface to be coated within said field, introducing into the region of the adhesive surface a finely divided coating material, and projecting by means of the field against the surface the particles substantially longitudinally of their axes.

58. The method of applying a finish to an article of maufacture, consisting in producing an electrical field of high voltage in an atmosphere, introducing a coating material in a finely divided form into the atmosphere and subjecting the article of manufacture to be coated to the electrical field and the atmosphere for a predetermined period of time to cause electrical deposition and arrangement of the material upon the article of manufacture.

59. The method of applying a finish to an article of manufacture, consisting in enclosing a space of predetermined size, introducing into the enclosed atmosphere a coating material in a finely divided form, subjecting the article of manufacture to be coated to the enclosed atmosphere, and subjecting the article of manufacture and the coating material to a difference of electrical potential to cause the coating material to be deposited on the article of manufacture.

JAMES S. SMYSER.

1049

E. E. LITTLEFIELD.

APPARATUS FOR ELECTRICALLY CHARGING FLUIDS.

APPLICATION FILED OCT. 24, 1916.

1,360,654. Patented Nov. 30, 1920.

2 SHEETS—SHEET 1.

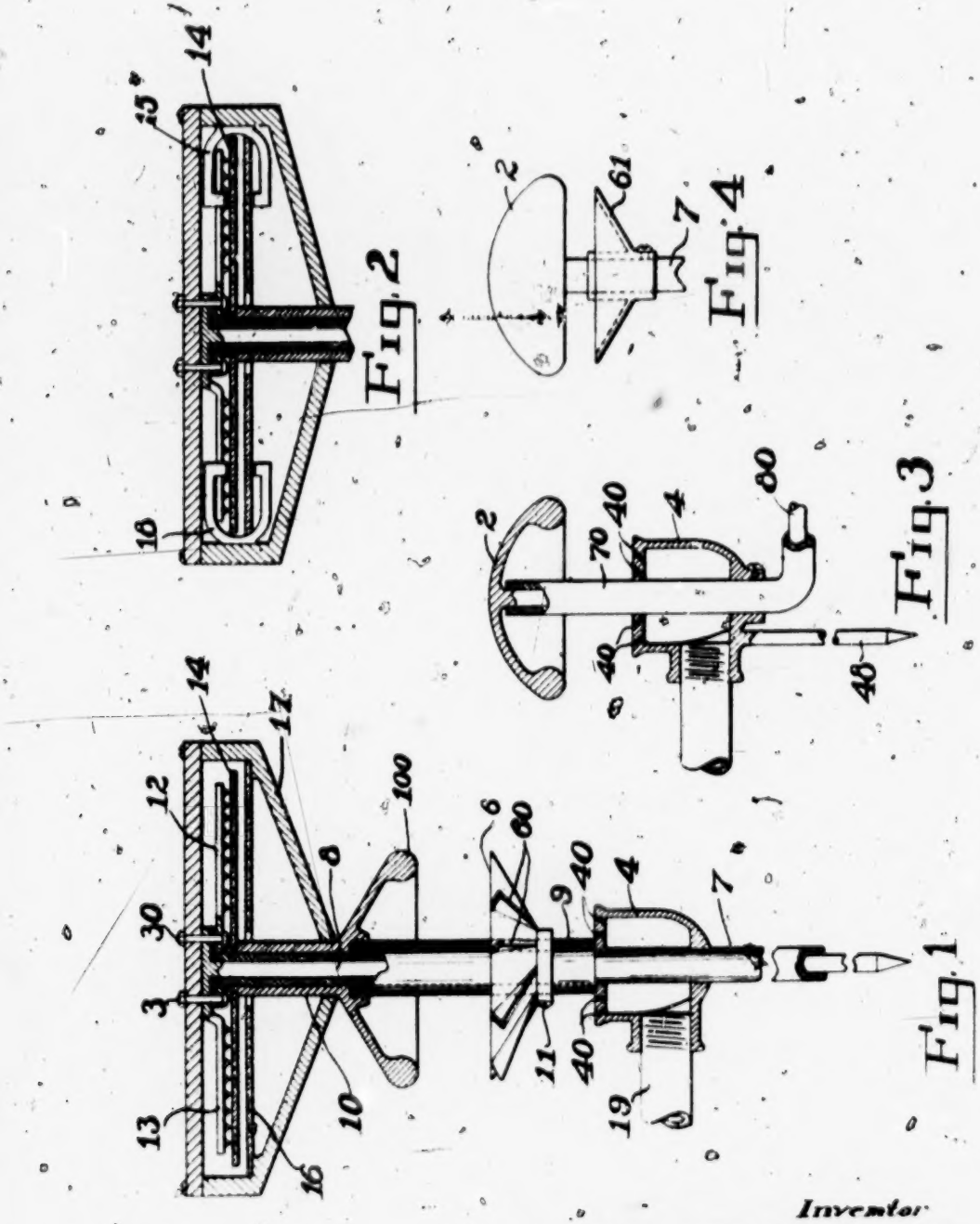

Fig. 2

Fig. 4

Fig. 3

Fig. 1

Inventor
Edgar E. Littlefield
By Henry L. Reynolds
Attorney

1051

E. E. LITTLEFIELD.

APPARATUS FOR ELECTRICALLY CHARGING FLUIDS.

APPLICATION FILED OCT. 24, 1916.

1,360,654. Patented Nov. 30, 1920.

2 SHEETS—SHEET 2.

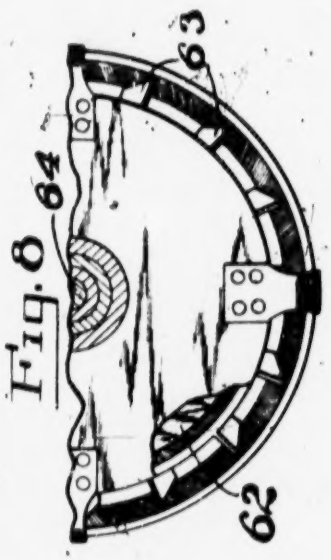

Fig. 8

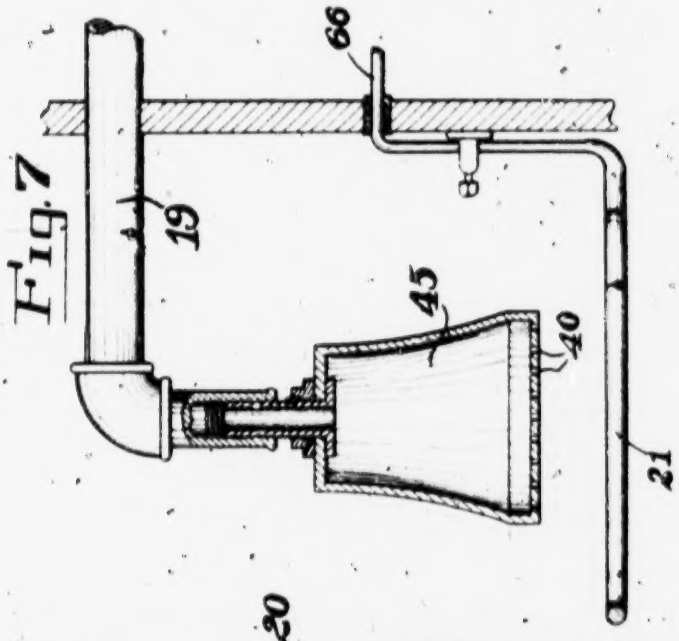

Fig. 7

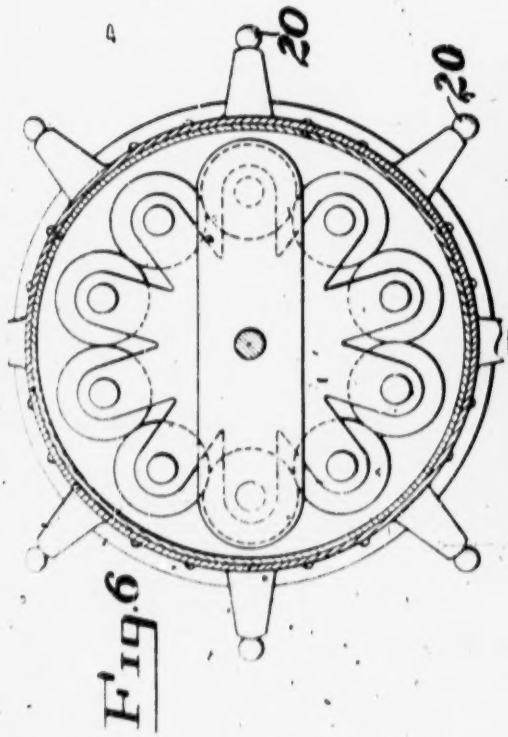

Fig. 6

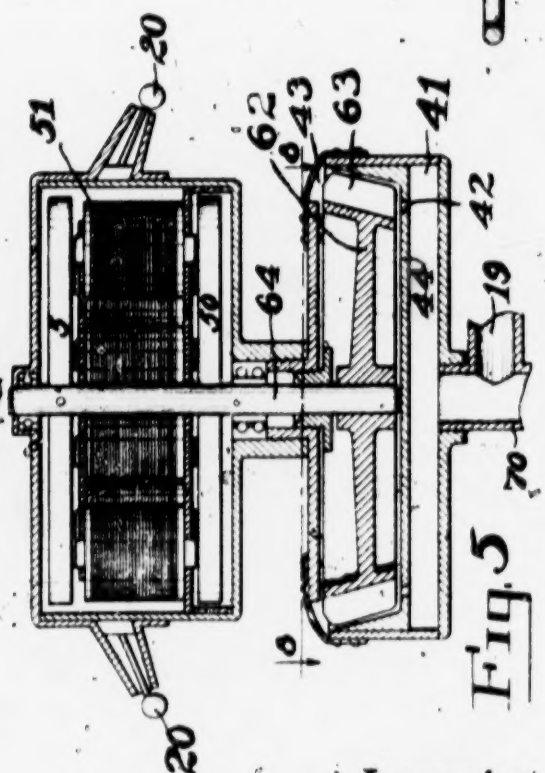

Fig. 5

Inventor
Edgar E. Littlefield
By Henry L. Reynolds
Attorney

UNITED STATES PATENT OFFICE.

EDGAR EARLE LITTLEFIELD, OF SEATTLE, WASHINGTON

APPARATUS FOR ELECTRICALLY CHARGING FLUIDS

1,360,654. Specification of Letters Patent. Patented Nov. 30, 1920.

Continuation of application Serial No. 482,599, filed March 10, 1909. This application filed October 24, 1916. Serial No. 127,338.

To all whom it may concern:

Be it known that I, EDGAR EARLE LITTLEFIELD, a citizen of the United States, and resident of the city of Seattle, county of King, and State of Washington, have invented certain new and useful Improvements in Apparatus for Electrically Charging Fluids, of which the following is a specification.

My invention relates to apparatus for giving fluids an electrical charge, of such character that when the fluid is discharged, as by spraying, the electrical charge will be carried to and deposited upon the objects upon which the fluid falls.

The object of my invention is to provide an improved apparatus for securing these results. In particular, I have employed these means to electrically charge fluids which are, or may be, applied to vegetation to thereby produce upon the vegetation the stimulating effect which electricity is known to have thereon and further to free it of fungous or insect pests when applied under suitable conditions.

I have also applied these means to charge fluids which are, or may be, used in connection with shower baths, or the like, to thereby apply the stimulating effect of electricity to the user.

While it would be desirable in many cases to use the fluid in a comparatively pure state I contemplate that advantage may be taken of the increased effect, in some cases, resulting from the employment of certain chemicals with which the fluid may be charged.

It is often desirable to charge fluids which issue, or are discharged, from a source having a grounded connection and, under such conditions, unless proper means are employed, the fluid can carry no appreciable charge. By means which I have employed the fluid may be charged by influence, or induction, in which case it may, or may not, have a grounded source, as the nature of the case may require.

This application is a continuation of my application, Serial No. 482599, filed March 10, 1909, and entitled Electric treatment of vegetation.

In the drawings I have shown forms of apparatus which may be employed in carrying out my invention and which are now preferred by me.

Figure 1 is a form of device, shown partly in sectional elevation, which is actuated by the fluid discharge.

Fig. 2 shows certain features as added to the device shown in Fig. 1.

Fig. 3 shows a form of apparatus, partly in section, by means of which a fluid may be charged with electricity supplied from any convenient independent source.

Fig. 4 shows a type of deflector which may be applied in combination with the form of device shown in Fig. 3.

Fig. 5 is an elevation and partial section of a type of device operating under the principles of an ordinary dynamic generator.

Fig. 6 shows an upper plan view of certain parts of the device shown in Fig. 5.

Fig. 7 shows modified forms of charging terminal and discharging device.

Fig. 8 is a section on line 8—8 of Fig. 5.

It has been found, as a result of scientific experiments, that water and other fluids may, when discharged as a spray, be charged with electricity, and it is generally recognized that electricity properly applied, has a beneficial and stimulating effect upon vegetation.

I have conceived the idea of charging water used to spray, or water, vegetation with electricity, whereby the vegetation so treated will be stimulated and its growth and physical condition and vigor be improved.

I also contemplate that the water may, when desired, be charged chemically with such substances as have been found to have a beneficial effect, either in stimulating plant growth, or by way of having an injurious effect upon the fungous or insect pests to which the vegetation may be subject.

By the employment of chemicals I am also enabled to increase the potential of a charge carried by the fluid, and by adding the electrical charge to the chemically charged fluid, the chemical action is increased.

By these means, either separately or combined, as may best fit the occasion, I am enabled to stimulate the growth of vegetation or free it of pests, or to do both at once.

In Fig. 1 I have shown a form of apparatus in which the fluid in being discharged, impinges upon a deflector, or similar device, which also acts as a motor and is operatively connected with an electric generator, the

product of which is transferred to the escaping fluid by which it is applied to the vegetation, or other object, along with the fluid.

In the practice of my invention the fluid may be supplied from any convenient source and while, in some cases, it might be desirable to use a source wholly insulated from a ground connection, I also contemplate that the source may be uninsulated from the ground connection, as, for instance, an ordinary hose connection with a water main.

Where it is desirable to use an insulated source, an insulated tank and conduit may be employed to deliver the fluid and the tank insulated from its source of fluid supply during the operation of the charging device.

In the device as shown in Fig. 1, the pipe 19 conveys the fluid to the discharging device 4, which breaks it up into a number of jets. This consists of a chamber closed at the top, but provided with discharge openings 40. Supported above the discharge chamber 4, in position to be engaged by the fluid discharge, is a deflector 6, which also functions as an impulse or impact motor. This deflector, as shown, consists of a cone having angularly disposed vanes 60, projecting from its surface in such position as to be engaged by the fluid discharge to thereby rotate the whole. This deflector may be of insulating material or not and of any convenient and suitable form, as the case may require. In this form of generator the essential thing is to use a device which is both a deflector and a power generator, so that the fluid acting upon it, operates the generator. Provisions for axial adjustment may be provided, as a set screw 11.

In this form of device the deflector is mounted to turn on an insulating sleeve, or stem 7, or is in other ways electrically insulated from the chamber 4, and the pipes supplying the fluid. Preferably, this deflector is also insulated from the generating device, which result I have shown as being secured by mounting it upon a sleeve 9 of any suitable insulating material. These two parts are secured to turn together.

A metallic sleeve 10 is secured to turn with the sleeve 9 and the deflector, and preferably is provided with a depending petticoat 100, or such other construction as may best serve as a discharging terminal for electrically charging the escaping fluid. The upper portion of the sleeve 10 is secured to the disk 14 through which means the latter is made to rotate with the deflector 6.

A current collecting device, herein shown as a comb 12, is mounted adjacent the disk at one side and a similar device 13 on the same side but distant from its companion comb. The comb 12 is in electrical contact with the sleeve 10 and through this with the discharge terminal 100. The comb 13 is insulated from the other comb and is in electrical connection with the spindle 8, which extends within the sleeve 7, and through which it may be grounded. As the discharged fluid forms into spray in the inducing field of the terminal 100 it receives an induced or bound charge which it may carry and deliver to an object at a distance from the charging device.

Under certain conditions the fluid, instead of receiving its charge by induction, may be charged by contact with the charging terminal. Where this is desired to be brought about the deflector is so formed and positioned that the fluid has freedom of contact with the terminal.

The electrical generator above described is preferably inclosed within a box, or casing, 17, to which the spindle 8 is preferably connected at its upper end through the insulating bolts, or screws, 3 and 30. These bolts, for which other means of an insulating character may be substituted, also secure other parts of the device. Within this casing and adjacent the rotatable disk 14, is the stationary disk 16 which constitutes a part of the generator. This disk 16 is of glass or other material having like electrical qualities, as is also disk 14. There are other details of a generator of this sort which I have not shown but which are recognized as being associated with such machines and forming component parts thereof.

In Fig. 2 I have shown how magnets may be associated with the foregoing described generator to overcome certain conditions, including in some cases atmospheric conditions, and to otherwise increase the effectiveness of the generator. This result may be accomplished by so positioning and securing the magnets 15 and 18 that their fields of force are cut by the rotating disk 14 and its armature and necessary associated parts. These means may also be associated with other generators of similar character, depending on the results to be obtained.

In Fig. 3 I have shown a form of device by means of which the fluid may be charged with electricity delivered from any convenient source, through conductor 80. This source may be of high frequency character and the supply may be developed in any convenient manner. The terminal 2 receives the inducing charges through the conducting stem which is insulated from the discharging device by the sleeve 70 which is snugly and adjustably fitted in the discharging device.

The chamber 4 is provided with discharge openings 40 which deliver the fluid in a path which is in the inducing field of the terminal 2. When desirable the terminal 2 may be coated or covered with such insulating material as has been found suitable for such purposes.

Fig. 4 shows how a deflector may be used in combination with the device shown in

Fig. 3. Its position may be adjusted as by set screw 11. If it is desired to charge the fluid by contact with the charging terminal the deflector may be so positioned as to make this possible.

Instead of the foregoing described device, I may employ such an electrical generator as that shown in Fig. 5. In this case the fluid is made to actuate a rotatable member which, preferably, is in the form of a turbine 62, which has angularly placed blades 63, upon which impinge jets issuing from openings 42 in plate 44, which forms part of the wall of chamber 41. The fluid is then discharged as a spray through the large orifices 43, through the field electrically charged from discharging terminals 20.

This member, turbine 62, for which may be substituted any other suitable means, has rigid connection as by shaft 64, with the permanent magnets 5 and 50, which are rotated with reference to the field coils 51. While I have shown the magnets 5 as being rotatable it is also possible to secure like results by rotating an armature in the field of permanent magnets.

The discharging terminals may be of any suitable form or construction. In cases where grounding a part of the charge is found to be necessary, any convenient means may be employed for the purpose. The part 70 forms part of a closed chamber which may be a pointed closed tube and adapted to be inserted in the ground. It may also partly form the upper part of a standard.

In Fig. 7 I have shown modified forms of charging terminal and discharging device. As the jets of fluid issue from the insulated chambered head 45 through openings 40 they receive a charge from the annular charging terminal 21 which receives its charge from any convenient source of static charge 66. Though not entirely necessary, the head 45 is preferably made of earthenware or other insulating material and is adjustably supported by the supply pipe.

The foregoing constructions are shown and described in more or less rudimentary form and as instances of types of apparatus which may be employed and as illustrating the scope of my invention. It is evident that great variation in forms and construction of apparatus may be employed without departing from the spirit of my invention.

Where desired the charge may be supplied from an independent source and applied to charge a fluid as it is applied to the vegetation in the form of a stream.

Under different conditions different intensities and character of charge may be used and any suitable means employed to apply it, as for instance, such means as might include, or be associated with, a high frequency generator, or a transformer, or the like.

I have also found that an inducing charge alone may be employed to form a fluid into spray. I have found that where a jet of fluid issues under the influence of an inducing field of force the charge has the effect of forming the fluid into spray. This effect may be used either alone or in combination with deflecting means.

The inducing terminals described in the foregoing should be so formed that the induced charge delivered to the fluid is substantially the maximum charge capable of being delivered by the charging terminal. In other words, the form and construction is such that the fluid receives a charge from that surface, or part, of the inducing terminal which is capable of delivering the most effective charge. Where a convective charge is employed the form of the terminal may be modified to meet the requirements.

It is evident that with my invention various fluids may be electrically charged and the charged fluid applied in many different ways. It may also be used in electrostatic separation, and the like, and for purposes of atomization.

I contemplate using either relatively pure or chemically charged liquids with this device. By chemically charging the liquids an insecticide or a fungicide may be used. The effect of the electrical charge upon the chemical, it is believed, will intensify its action.

What I claim as my invention is:

1. The combination with a liquid discharging device of means actuated by said discharge to electrify the liquid discharged.

2. The combination with a liquid discharging device of a generator of electric charge actuated by the liquid discharged and means for electrically charging the discharged liquid from said generator.

3. The combination with a liquid discharging device of a rotary electric generator and means for electrically charging the liquid discharged from said liquid discharging device.

4. The combination with a liquid discharging device of means actuated by the discharged liquid to generate an electric charge and means for applying the electricity thus generated to induce a charge in the discharged liquid.

5. The combination with a device for discharging fluid upon vegetation, of a generator of electromotive force operated by the discharge of the fluid and connected to electrically charge the discharged fluid.

6. The combination with a fluid discharging device, of a rotatable deflector actuated by the discharge of fluid, and an electric generating device operated by said deflector and feeding its charge into the fluid discharge.

7. The combination with a fluid discharging device, of a rotatable member actuated by the fluid discharge, a static electric gen-

erator having one part thereof turned by said member, said generator being connected to discharge the electricity generated thereby into the fluid discharge.

8. The combination with a fluid spraying device, of means for giving the spray a bound charge of electricity, said means including a rotatable electrically charged terminal in inductive relation with the fluid discharge.

9. The combination with a fluid discharging device and means for electrically charging the fluid, of means for generating electricity actuated by the fluid and connected with said fluid charging means.

10. A fluid supply having an uninsulated source, means for dispersing the fluid, and means without the path of the fluid for giving the particles of said fluid an electric charge.

11. An apparatus for electrically charging a fluid comprising a fluid conduit and a spray device supplied thereby and means for giving the fluid an electric charge through a dielectric as it is discharged in the form of spray.

12. A fluid spraying device comprising, a source of fluid, a spray producing member, a charging terminal disposed centrally of and adapted to inductively charge the spray, and means for charging said terminal.

13. A device for applying electric charges to a fluid spray comprising, a source of fluid, a spray forming device, means for inductively charging the particles of the spray, said means being insulated from the spray device.

14. A device for applying electric charges to a fluid spray comprising, an uninsulated source of fluid, a spray forming device, and means for applying electric charges to the particles of the spray through a dielectric.

15. A means for applying a bound electric charge to vegetation comprising, means for discharging a fluid in the form of spray, and means for inductively charging said fluid with electricity.

16. A device for electrically charging a fluid spray having a charge inducing member spaced at a distance from the path of the spray.

17. A fluid spraying device for electrically charging a fluid spray having a member which is spaced from and adapted to form a field of force in the path of the fluid spray.

18. A device for electrically treating vegetation comprising a spray device having means for electrically charging the spray through a dielectric.

19. As an article of manufacture, a device for electrically charging fluid vapor or spray including an uninsulated source of fluid and means for projecting a field of force into the path of the fluid.

Signed at Seattle, Washington, this 19th day of October, 1916.

EDGAR EARLE LITTLEFIELD.

Dec. 4, 1923.

1057

1,475,995

L. HEIS ET AL

CHEMICAL CONVERSION OF SUBSTANCES

Filed March 21, 1923 2 Sheets-Sheet 1

Fig. 1

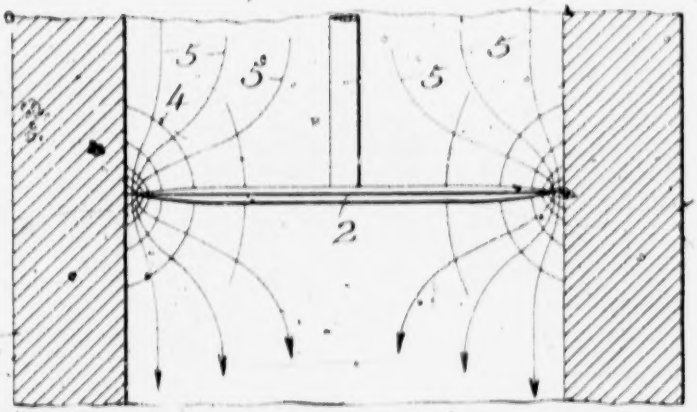

Fig. 2

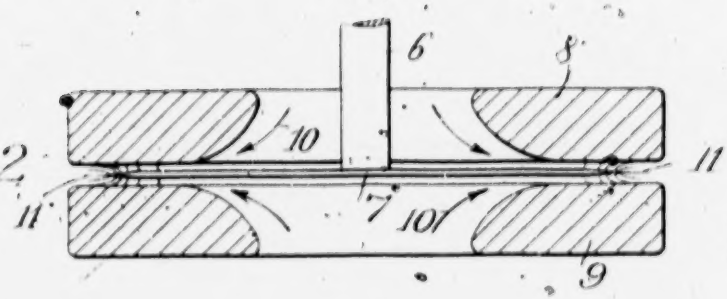

Fig 3

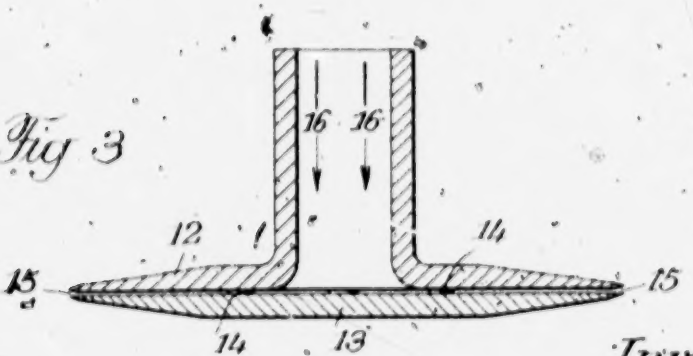

Inventors:

Leonhard Heis.

Hubert Jeyler

By [illegible]

Att'y

1059

Dec. 4, 1923. 1,475,995

L. HEIS ET AL

CHEMICAL CONVERSION OF SUBSTANCES

Filed March 21, 1923 2 Sheets-Sheet 2

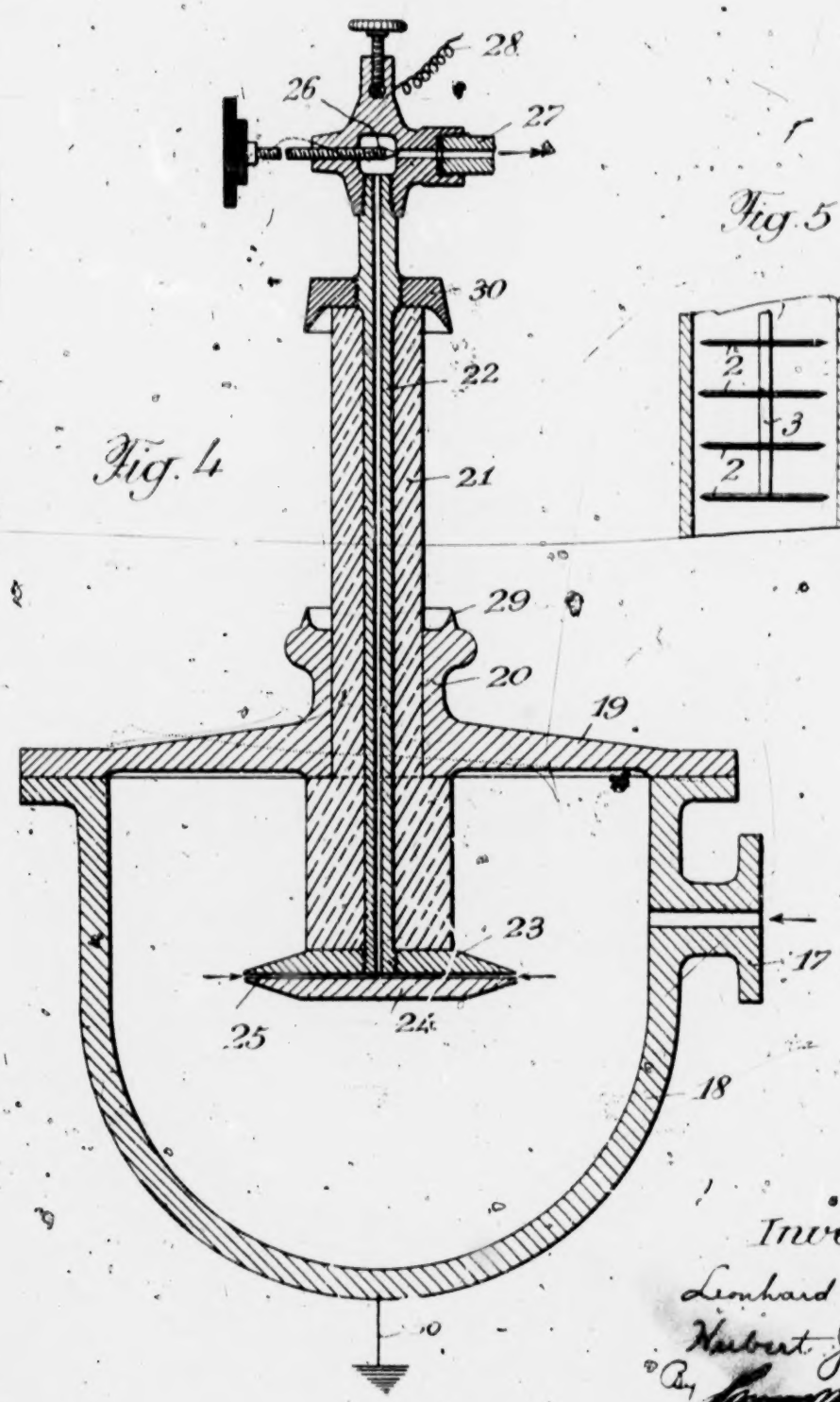

Fig. 4

Fig. 5

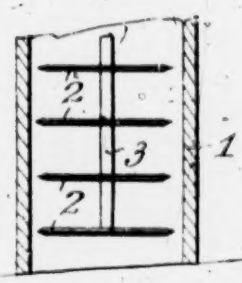

Inventors
Leonhard Heis
Herbert Jezler
By [signature] Atty

Patented Dec. 4, 1923. 1,475,995

1061

UNITED STATES PATENT OFFICE.

LEONHARD HEIS AND HUBERT JEZLER, OF ZURICH, SWITZERLAND.

CHEMICAL CONVERSION OF SUBSTANCES.

Application filed March 21, 1923. Serial No. 626,658.

To all whom it may concern:

Be it known that we, LEONHARD HEIS, a citizen of the Republic of Germany, residing at Zurich, Switzerland, and HUBERT JEZLER, a citizen of the Republic of Switzerland, residing at Zurich, Switzerland, have invented certain new and useful Improvements in the Chemical Conversion of Substances; and we do hereby declare the following to be a clear, full, and exact description of the invention, such as will enable others skilled in the art to which it appertains to make and use the same, reference being had to the accompanying drawings, and to letters or figures of reference marked thereon, which form a part of this specification.

Numerous apparatus exist already intended for the chemical conversion of especially gaseous and vaporous substances by means of an electric discharge. Generally the substances to be converted i. e., chemical actions to be produced are, between the electrodes of such apparatus, subjected to the action of an electric current in the form of an electric arc, sparks, brush-light, glow-light and cold discharges, the chemical conversion being effected by shock ionization. In order to cause the required electric energy to act on a great many molecules it is necessary with these processes to cause the substances to travel a long stretch between the electrodes. The practical application of these processes yields, however, insufficient results in most cases.

In contradistinction to the hitherto known processes with the process according to the present invention the substances to be converted are caused to pass through very intense electric fields without producing the disruptive or discharge phenomena above described, and having an intensity of at least 10^3–10^5 volt per centimetre which fields are obtained by the utilization of high tension currents or by the combined utilization of such currents and of steam or gas pressures up to thousands of atmospheres, whereby the temperature of the substances is variable within wide limits.

The intense electric fields may further be produced at the intensely curved surface of electric conductors, such as for instance points, edges, or thin wires, by charging these conductors with high tension current. With such fields and for the conversion of some substances pressures of for instance 20, 100 and more atmospheres may be found sufficient.

Most of the modern physicists favour the view that the binding forces within the atoms and the molecules are of an electric nature. It must therefore be possible to effect dissociations when electric forces are utilized which are sufficiently powerful. There are numerous indications to be found in the modern technical literature about the order of magnitude of these forces.

When working at atmospheric pressure the generation of the necessary electrostatic intensity of field can be frustrated by the fact, that with comparatively small intensities of field shock ionization is initiated by the action of the ions which are always present to a certain degree, this shock ionization may prevent a further considerable increase in the intensity of field. The intensity of field at which the shock ionization starts depends on the pressure of the gas and is in proportion to said pressure. This intensity of field is with air under atmospheric pressure approximately $2–5.10^4$ volt/cm. On the other hand the intensity of field which is necessary for the direct cessation of the molecular binding forces is independent of the density of the gas and amounts, for instance to 10^5 volt/cm. with nitrogen. In order to attain this intensity of field it may be found necessary to work at such pneumatic pressures that the shock ionization only occurs when this intensity of the field is reached. The pneumatic pressure required for treating air and nitrogen amounts to approximately 10^2 atmospheres. Experiments have borne out this conclusion and have shown that with an increasing pneumatic pressure a continuously increasing quantity of the gas is rendered active and that at a determined pressure, i. e., at the pressure at which the shock ionization is approximately completely suppressed, the highest output of active gas is obtained.

The largest electrostatic forces are present in the immediate neighbourhood of the surface of intensively curved conductors which are charged with electricity, for instance at points, along edges and around thin wires. By suitably shaping the surface of the conductor as well as by choosing the tension,

the intensity of these fields may be altered at will. The height of the tension is limited or controlled in practice by a suitable increase of the curvature of the surface, however, the fields may be so chosen that their action overcomes wholly or partially the chemical binding forces. If the fields can be made sufficiently intense, a very small space is obtained within which nearly all the molecules can be influenced. Only this small space shall be utilized according to the present invention.

Assuming as conductor a thin wire or one provided with a sharp edge and using the tension φ as ordinates and the distance s as abscissæ then the intensity of fields is—

$$\frac{d\varphi}{ds}$$

If such conductors are charged for instance with a current of approximately 500,000 volt or more, electric fields are generated in the immediate neighbourhood of these conductors showing an intensity of 10^8 volt/cm. and more, which intensity suffices to overcome many chemical binding forces. As the intensity of the field decreases very rapidly with an increase in the distance from the conductor it is evident that the effective space is very small and measures only a few millimetres or perhaps only fractions of a millimetre. Within this limited field the substance forced through it is acted upon only a very short time, as this small space is quickly transversed by the substance to be treated. The converted substances are thereupon not subjected to a further destruction in the weak field but they may act on each other unobstructedly. When the substance flows past edges, the whirls generated thereby may be utilized for mixing the separated components.

The shock ionization which acts in the same manner is not desired as it causes a good conductivity and thereby the formation of sparks, of glow- and brush-light and of cold discharges with the result of a temporary reduction in the intensity of the field whereby the uniformity of effective action and the desired result are reduced to a large extent.

The shock ionization may be prevented for the greatest part by forcing the substances to be treated—gases, vapors and dust suspensions and their mixtures, and hereinafter called gaseous substances—through a small passage, in which the field is most intense, at a suitable speed and eventually at a proper pressure, or by admixing to the medium to be treated, substances which lower effectively the electric conductivity but which do not necessarily partake in the chemical conversion. A further way of keeping the shock ionization within certain limits consists in the utilization of the electrical condensing action by the expansion of vaporous medium in the electric field.

The progress of the chemical conversion of the substances will approach the ideal state when for instance a circular disc having a sharp edge is continuously charged at high tension and is so mounted that near the disc no other body is present having a different potential and through which the electric current would flow off. Under this condition and making use of the above mentioned precautions for avoiding the shock ionization the conversion of the supplied electric energy into the equivalent chemical energy takes place continuously whereby the escape of free electricity from the field which would be a loss, is avoided.

In practice, however, this ideal state is only approximately attained, but the approximation goes so far that high concentrations of the converted substances are obtained without too great losses occurring.

Constructional examples of devices adapted to carry into effect the present process are illustrated in the accompanying drawings, in which Figs. 1–5 are vertical sections through five devices.

Referring to Fig. 1 of the drawings, 1 denotes a tubular insulator in which a circular disc 2 having a knife edge is located, the disc 2 being charged at high tension by means of a vertical rod 3. The cross-sectional area of the passage between the nonconductor 1 and the disc 2 is dimensioned of a greater or smaller width according to the required action of the electric field. But in any case this width must be small to obtain the greatest pressure of the gas at the constricted passage between the knife edge and the tube wall where the intense field is located. The electric field which is at the periphery of the disc 2 and the maximum intensity of which is in the immediate neighbourhood of the knife edge of the disc, is illustrated by the lines of force 4. The substances to be converted, which may be in a vaporous, gaseous and powdery state, i. e. suspended as dust, or in a mixture of these states, are forced to pass through the electric field in the direction of the arrows 5 at more or less high speeds and under high pressures.

Fig. 2 illustrates a constructional form of the device which is a modification of that shown in Fig. 1. The knife edged plate 2 shown in Fig. 1 is replaced by a thin sheet metal disc 7, which is charged at high tension by the conductor 6.

The conductive disc 7 is arranged in a small space between two parallel discs 8 and 9 made of insulating material, which space corresponds to the effective portion of a field. The substance to be converted is forced in the direction of the arrows 10 through the high tension field 11 present at the edge of

the disc 7. The direction of flow of the substance may also be reversed if circumstances require it.

Fig. 3 shows a further constructional example of a device according to the invention which differs from the above described two examples inasmuch as two knife edged conductive discs 12 and 13 charged with electric current are utilized. The two discs are electrically connected to each other by means of intermediate pieces 14 or spacing blocks so that a very narrow space is obtained between the discs. The field is formed at the edges of the discs, at 15, and gases which are forced in the direction of the arrows 16 through the tubular extension of the disc 12 have to pass through this field.

Fig. 4 shows the whole arrangement of an apparatus for the chemical conversion of substances. The substance to be treated is supplied to the apparatus which is of metal through the branch 17 of a receptacle 18. The receptacle is closed by a cover 19 having a cylindrical extension 20 through which an insulated member 21 passes. The member 21 surrounds a tube 22 made of conductive material. The lower end of the tube 22 is screwed to a conductive disc 23 to which a disc 24 is fixed, a narrow space 25 being left between the discs for the substance to flow through. At the other end of the tube 22 a valve 26 is arranged by means of which the pressure inside the receptacle 18 can be regulated. The treated substances are discharged at 27. The top of the tube 22 is connected to a source of high tension current, for instance to a transformer by the lead 28, the receptacle 18 is grounded at 30. The top of the extension 20 is provided with a sharp edged flange 29 and above the insulated member 21 there is arranged a metallic cap 30 having a similar sharp edged flange, the flanges forming between them a safety sparking gap.

The two knife edged discs may be substituted by two discs made of thin sheet metal, or more than two discs may be used, (for instance four as shown in Fig. 5) to suit special practical requirements.

With the last described arrangement very small areas for the passage of the substance are obtained without the utilization of non-conductive protecting discs 8 and 9, as shown in Fig. 2.

It is evident that a great many constructional forms of the devices according to the invention can be made and that instead of discs other bodies made of wires such as wire nettings, spirals, sharp points and the like may be used for generating the fields through which the substances to be treated have to pass.

In Figs. 1–3 only the field producing elements of the device are illustrated, numbers of such elements may of course be assembled to form an apparatus as required in practice, and as is shown in Fig. 5.

The present invention is of particular importance for the production of nitrogenous compounds from the air whereby air is forced through the devices described above and the nitrogen molecules are dissociated, i. e. are rendered active; however, the invention may be applied to any other substances in vaporous or gaseous condition or suspended as dust.

The substances to be treated may be forced through the fields at varying initial and final pressures and at varying speeds for which more or less narrow areas for the substances to pass may be chosen according to the effective portion of the field. The substances may also be forced from nozzles as free jets through the electric fields.

With some chemical products it is advantageous to let the converted substances mix with each other only after they have passed the electric fields.

The treatment of the substances may also take place at high temperatures, in this case the most suitable temperatures at which the conversions may be effected will have to be carried out by experiments in every case.

We claim:

1. The process of effecting chemical action of substances that are in a gaseous or vaporous state or in suspension, which comprises forcing the substances to be treated through a high tension electrical field without causing shock ionization and rupture of said field.

2. The process of effecting chemical action of substantially gaseous substances or suspensions, which comprises producing an electric field of not less than 10 volts per cm. and forcing the substance to be treated through such field without causing shock ionization and rupture of said field.

3. The process of effecting chemical action of substantially gaseous substances, which comprises producing a small electric field of a tension between 10^3 and 10^8 volts per cm., and forcing such substance through said small field under a pressure considerably above atmospheric pressure without producing shock ionization and a disruptive discharge of said field.

4. The process of effecting chemical action, which comprises forming at the acutely curved surface of an electric conductor a static electrical field of high tension, and passing the substances to be treated through such field at a pressure and temperature that will not cause shock ionization and a rupture of said field.

5. The process of effecting chemical action, which comprises generating a high tension electrical field, subjecting the substance to be treated to the action of such field without discharging the field to produce

shock ionization, and maintaining a high pressure on the substance during its passage through the field.

6. The process of effecting chemical action, which comprises maintaining a high tension electrical field without producing shock ionization at an acutely bent conducting surface, and crowding the substance to be treated through a narrow space in such field at a high pressure without discharging said field.

7. The process of effecting chemical action, which comprises maintaining a high tension electrical field without producing shock ionization at an acutely bent conducting surface, and crowding the substance to be treated through a narrow space in such field at a high pressure and at a high temperature without rupture or discharge of said field.

8. The process of effecting chemical action, which comprises imparting a high pressure to the substance to be treated, maintaining at an acutely curved conducting surface a very intense electrical field without producing shock ionization, the electrical tension and curvature of said surface being chosen to maintain a field between 10^5 and 10^8 volts per cm., and maintaining the high pressure on the substance while in said field without causing rupture of said field.

9. The process of effecting chemical action of substantially gaseous substances, which comprises forcing such substance to be treated through a high tension electrical field without causing shock ionization or a rupture of said field, and mixing with such substance a medium capable of lowering the electric conductivity of said substance.

10. The process of effecting chemical action of substantially gaseous substances, which comprises forcing such substance through a high tension electric field without causing shock ionization or rupture of said field, mixing with such substance a medium capable of lowering the electric conductivity of the substance, and maintaining a high pressure on the mixture while in such high tension field.

11. The process of effecting chemical action of substantially gaseous substances, which comprises forcing such substances through a constricted passage in a high tension electrical field without causing shock ionization and thereby imparting whirls to such substances to mix the components of such substances, and controlling the initial and end pressures of the substance to determine the speed of passage through such field.

12. The process of effecting chemical action of substantially gaseous substances, which comprises imparting a high pressure to the substances to be treated, forcing the substances under said high pressure through very intense electric fields formed at the acutely curved surface of electric conductors, thereby causing the condensing action produced by the expansion of vaporous substances to reduce shock-ionization, and controlling the temperature of the substance to be treated.

13. The process of effecting chemical action of substantially gaseous substances, which comprises imparting a high pressure to the substances to be treated, forcing each substance separately under high pressure through very intense electric fields formed on the acutely curved surface of electric conductors without producing shock ionization, and causing the substances leaving said electric fields to mix and react with each other.

14. A device for effecting chemical action of substantially gaseous substances, comprising a plurality of elements each consisting of a conductor having an acutely curved surface, means to charge said elements with high tension current, and means to conduct the substances to be treated through the electric fields without producing shock ionization at the acutely curved surfaces of said elements.

15. A device for effecting chemical action of substantially gaseous substances, comprising a plurality of elements each consisting of a disc of conductive material provided with a knife-edged circumference, means to charge said elements with high tension current, and means to conduct the substances to be treated through the electric fields at the acutely curved surfaces of said elements, without producing shock ionization.

16. A device for effecting chemical action of substantially gaseous substances, comprising a plurality of elements, each consisting of a conductor having an acutely curved surface, means to charge said elements with high tension current, means to conduct the substances to be treated through the electric fields generated at the acutely curved surfaces of said elements, and means to limit the area for the passage of the substances to the most effective parts of the field without producing shock ionization.

17. A device for effecting chemical action, comprising an electrical conductor having an acutely curved surface, means to charge said conductor at high potential to form an electrical field of increased potential at the acutely curved surface without effecting shock ionization, and means to direct through such field in a constricted passage thereat the gaseous substance to be treated under substantially high pressure.

18. A device for effecting chemical action, comprising a closed chamber having an inlet for the material under pressure, an electrode comprising spaced electrode elements arranged to form a narrow slot between them, a tube extending from said electrode

and slot, and means to supply current to the electrode to produce a substantially non-disruptive electrical field at the edges of the electrode and slot.

19. A device for effecting chemical action, comprising a closed, grounded chamber having an inlet for the material under pressure, an electrode comprising electrode elements arranged to form a narrow slot between them, a conductive tube passing into said chamber and perpendicular to said electrode and slot for the exit of products formed, a valve to control said tube, and an electric terminal for the tube.

In testimony that we claim the foregoing as our invention, we have signed our names.

LEONHARD HEIS.
HUBERT JEZLER.

1067

April 19, 1932. E. E. LITTLEFIELD 1,854,475

METHOD FOR ELECTRICALLY CHARGING FLUIDS

Filed Nov. 27, 1920

Fig. 1

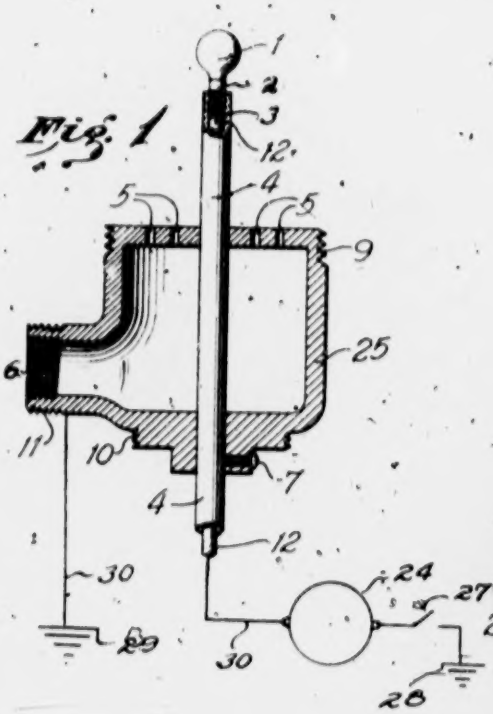

Fig. 2

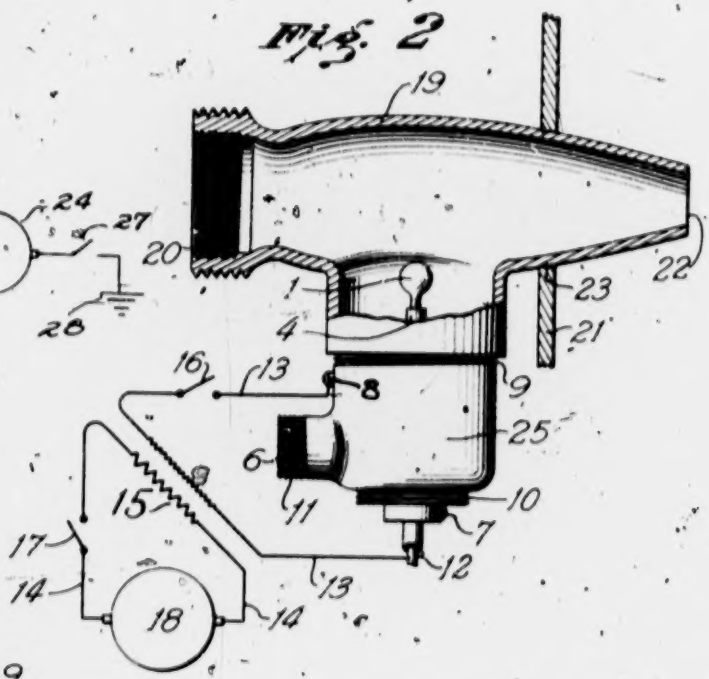

Fig. 3

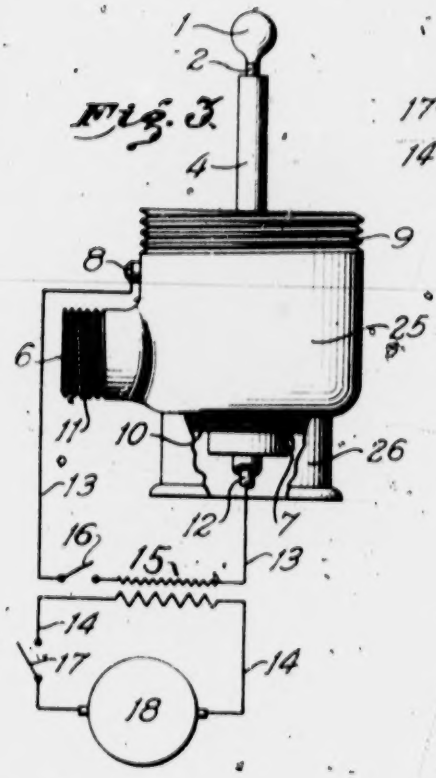

INVENTOR

Edgar Earle Littlefield

Patented Apr. 19, 1932

1,854,475

1069

UNITED STATES PATENT OFFICE

EDGAR EARLE LITTLEFIELD, OF SEATTLE, WASHINGTON

METHOD FOR ELECTRICALLY CHARGING FLUIDS

Application filed November 27, 1920. Serial No. 426,860.

This application is a continuation, in part, of an application filed by me October 24, 1916, Ser. No. 127,338, for an improvement in apparatus for electrically charging fluids, which application eventuated in Patent No. 1,360,654, Nov. 30, 1920. The application which eventuated in Patent No. 1,360,654, is a continuation of my former application filed March 10, 1909, Ser. No. 482,599, and the subject-matter of the instant application is disclosed in the application filed March 10, 1909.

My invention relates to methods of electrically charging and treating fluid vapors and sprays and to apparatus for putting such methods into practical use.

One of the objects of my invention is to provide a means and method for dispersing fluids, particularly fluid fuels.

Other and further objects and advantages of the invention will appear to those skilled in the art upon consideration of the specification, drawings, and the appended claims.

For a better understanding of the nature and scope of my invention reference may be had to the following description and the accompanying drawings in which Figure 1 is a side elevation, partly in section, of one embodiment of my invention. Fig. 2 is a diagrammatic view, partly in sectional elevation, showing a circuit arrangement and one application of the invention. Fig. 3 is a diagrammatic view showing the device of Fig. 1 connected to a source of current, together with other details.

I have found that a fluid may be reduced to the form of vapor or spray by subjecting the same to an inducing electrical field. I have found that where a jet of fluid issues under the influence of an inducing field of force the charge has the effect of forming the fluid into fine particles. This effect may be used either alone or in combination with deflecting means.

While it would be desirable in many cases to use the fluid in a comparatively purer state I contemplate that advantage may be taken of the increased effect in some cases resulting from the employment of certain chemicals with which the fluid may be charged. By the employment of chemicals I am enabled to increase the potential of a charge carried by the fluid.

I have employed this method to disperse fluids employed in the electrical treatment of vegetation. I have also employed the method to disperse, or atomize, liquid fuel employed in connection with furnaces and internal combustion engines. It has also been used for charging and dispersing fluids discharged from fountains.

As a further illustration of the scope of the invention it may be utilized for the generation of ozone to be supplied to the fuel using device. Instead of opposing combustion, this substance has been found to possess properties favoring it.

In Fig. 1 I have shown an embodiment by means of which the fluid may be dispersed by subjecting it to the influence of an electrostatic field. To this end I have provided a casing 25, which may be connected to a source of fluid by means of the screw threads 11 or 6. Fluid is discharged from the chamber provided by the casing 25 through the discharge openings 5, 5 in a path which is in the inducing field of an electrode 1, which is connected by means of a threaded member 3, and a conductor 12, to a source of high tension electricity. The conductor connecting the electrode with the source of electricity is preferably enclosed within an insulating member 4, while its position, together with that of the electrode, may be adjusted by means of set screw 7. At 2 is an insulating sleeve enclosing the conducting member and a part of the electrode. The electrode 1 may of a type commonly used with violet ray machines, or the like. I contemplate, however, that any other suitable type or form of electrode may be substituted therefor and either a part or the whole enclosed by insulation where necessary. Such means as might include, or be associated with, a high frequency generator, or a transformer, or the like, may be employed to develop an electrostatic field for charging the vapor or spray. While an inducing field developed by an alternating current may be employed to charge the fluid, I have found it preferable to employ unidirectional current. For this purpose either a mechanical

rectifier or a set of two, preferably four, kenotrons may be employed. With such apparatus both sides of the waves are made available for use. With one kenotron, however, one side of the waves is suppressed and one side made available. I have found that for dispersing the fluid unidirectional current is superior to alternating current. A simple arrangement for dispersing the fluid by means of unidirectional current may consist of a high potential generator of unidirectional current, conventionally shown at 24 which is connected by means of circuit 30 to conductor 12 and the device 25. Circuit 30 may, if desired, be provided with a switch element 27 and "grounded" at 28 and 29, or completed in any other suitable or convenient manner.

Theoretically considered and assuming that the conductor 12 is connected to a source of direct current an electrical field will form in the region adjacent the electrode 1. If the field is one in which induction may take place and fluid from a jet is discharged under the influence of the field the particles leaving the jet will carry electrical charges of one sign while the charges of the opposite sign will be given up to the jet, it being assumed that the electrostatic capacity of the jet is sufficient to absorb the charges of opposite sign. Since the particles leaving the jet carry electrical charges of similar sign mutual repulsion or dispersion results.

Considering now a field in which the air is ionized or charged, it is possible to charge the particles of fluid by means of the ionized air. If the fluid particles, for instance, are exposed to contact with the ionized air electrical charges will be imparted to the former. Since the charges carried by the air particles are of similar sign and these are shared with the particles of fluid the charges imparted to the latter will be of similar sign.

In the foregoing it has been assumed that the field is one produced by direct current. If now a field produced by alternating current is substituted for the former similar results may be obtained. An insulated particle of matter occupying a fixed position in an alternating field will receive first a charge of one sign and then a charge of opposite sign, but if the particle is passed rapidly through the field it will be found to possess a substantial charge after leaving the field. Obviously, the particle receives a charge and leaves the field before an opposing influence is set up. In a substantially similar manner it is possible to charge particles of fluid or solid matter. Moreover, it is apparent that

In Fig. 2 I have shown an arrangement by means of which the method may be employed for dispersing or atomizing fluid fuel employed in connection with a furnace. This arrangement provides a burner 19, having an orifice 22 opening into the furnace chamber (not shown), and an air supply inlet which may be connected, if desirable, to a source of air under pressure by means of the screw threads 20. The burner is connected to the wall 21 of the furnace by means of the screw threads 23. By means of the screw threads 9 a combination is effected between the device of Fig. 1 and the burner 19. A low tension source of current 18 supplies current through circuit 14 to the primary winding of a high tension transformer 15, which, in turn, feeds the secondary circuit 13, which is connected to terminal 8 and conductor 12. Means are provided for opening or closing circuits 13 and 14 by the switch elements 16 and 17 respectively.

Figure 3 is a diagrammatic view of a side elevation of the device of Fig. 1, showing the same connected to a standard, and also showing the circuit connections, the same being as before described. As illustrated, the standard 26 is connected by means of the screw threads 10 to the casing 25. The standard, which is shown partly in section, provides a supporting means whereby the device may be employed in electrical irrigation. Obviously, any other suitable or convenient means may be substituted for the standard shown and connected, as by the screw threads, to the casing 25. The device may also be supported by the conduit supplying the fluid, in which case the standard would be unnecessary.

I contemplate that water, when applied to vegetation, may, when desired, be charged chemically with such substances as have been found to have a beneficial effect, either in stimulating plant growth or by way of having an injurious effect upon the fungus or insect pests to which the vegetation may be subject. By adding the electrical charge to the chemically charged fluid the chemical action is increased. By these means, either separately or combined, as may best fit the occasion, I am enabled to stimulate the growth of vegetation or free it of pests, or to do both at once.

It is evident that with my invention various fluids may be electrically charged and the charged fluid applied in many different ways. As indicated previously, either relatively pure or chemically charged liquids may be used with this device.

without departing from the scope of the appended claims.

What I claim is:

1. The method of dispersing fluid fuel which consists in discharging the same in the form of one or more jets and applying electrical charges to the dispersed particles of similar sign and substantially equal value.

2. The method of reducing fluid fuel to a form suitable for consumption which consists of applying thereto electrical charges of such character as to cause repulsion between the particles.

3. The method of dispersing particles of fuel which consists in applying thereto mutually repellent electrical charges.

4. The method of dispersing fluid fuel which consists in discharging the same in the form of one or more jets and so charging the unvaporized fluid that when the particles become detached from the mass they carry electrical charges of such character that mutual repulsion is produced between them.

5. The method of dispersing liquid fuel which consists in applying to the particles thereof electrical charges of similar sign and of substantially equal value.

6. The method of dispersing a liquid which consists in applying mutually repellent electrical charges to the particles thereof.

7. The method of dispersing liquid fuel which consists in applying bound electrical charges of similar sign to the particles thereof.

8. The method of reducing fluid fuel from an undispersed condition to a dispersed condition which consists in so charging the particles thereof that when they are caused to move in a path that those particles cutting the same cross-sectional plane at the same time carry electrical charges of such character that the force exerted by mutual repulsion is of substantially equal value between them.

9. The method of dispersing liquid fuel which consists in projecting into the path thereof an electrical field of such character that after the particles leave the field they carry mutually repellent electrical charges.

10. The method of dispersing liquid fuel which consists in projecting into the path thereof a unidirectional high potential electrical field of such character as to cause mutual repulsion between the particles of the fuel.

11. The method of dispersing liquid fuel which consists in projecting into the path thereof a high potential [illegible]

carry mutually repellent electrical charges of substantially equal value.

13. The step in the method of dispersing liquid fuel which consists in so charging the particles that those traveling abreast carry electrical charges of like sign.

14. The method of dispersing liquid fuel which consists in applying to the particles thereof electrical charges of such character that mutual repulsion is produced independently of ionization.

15. The method of reducing liquid fuel from an undispersed condition to a dispersed condition which consists in so charging the particles that they carry electrical charges of one sign while the electrical charges of opposite sign are given up to the undispersed body of the liquid.

16. The method of dispersing liquid fuel which consists in causing mutual repulsion between the particles thereof without simultaneously causing precipitation of the same.

17. The method of dispersing a fluid which consists in establishing an electrical field and discharging the fluid in the form of two or more jets into the field to apply electrical charges to the dispersed particles of similar sign and substantially equal value.

18. The method of dispersing a fuel fluid consisting in establishing a uni-directional electrical field in confined gas, and spraying fuel liquid to commingle with the gas and to pass through the electrical field to impose a charge of like sign on the spray particles to effect mutual repulsion between the same to augment the dispersion of the same.

In testimony whereof I have hereunto affixed my signature at Seattle, Washington, this 20th day of November, 1920.

EDGAR EARLE LITTLEFIELD.

1073

April 26, 1932. E PUGH 1,855,869

METHOD OF AND APPARATUS FOR COATING ARTICLES

Filed Dec. 31, 1928 2 Sheets-Sheet 1

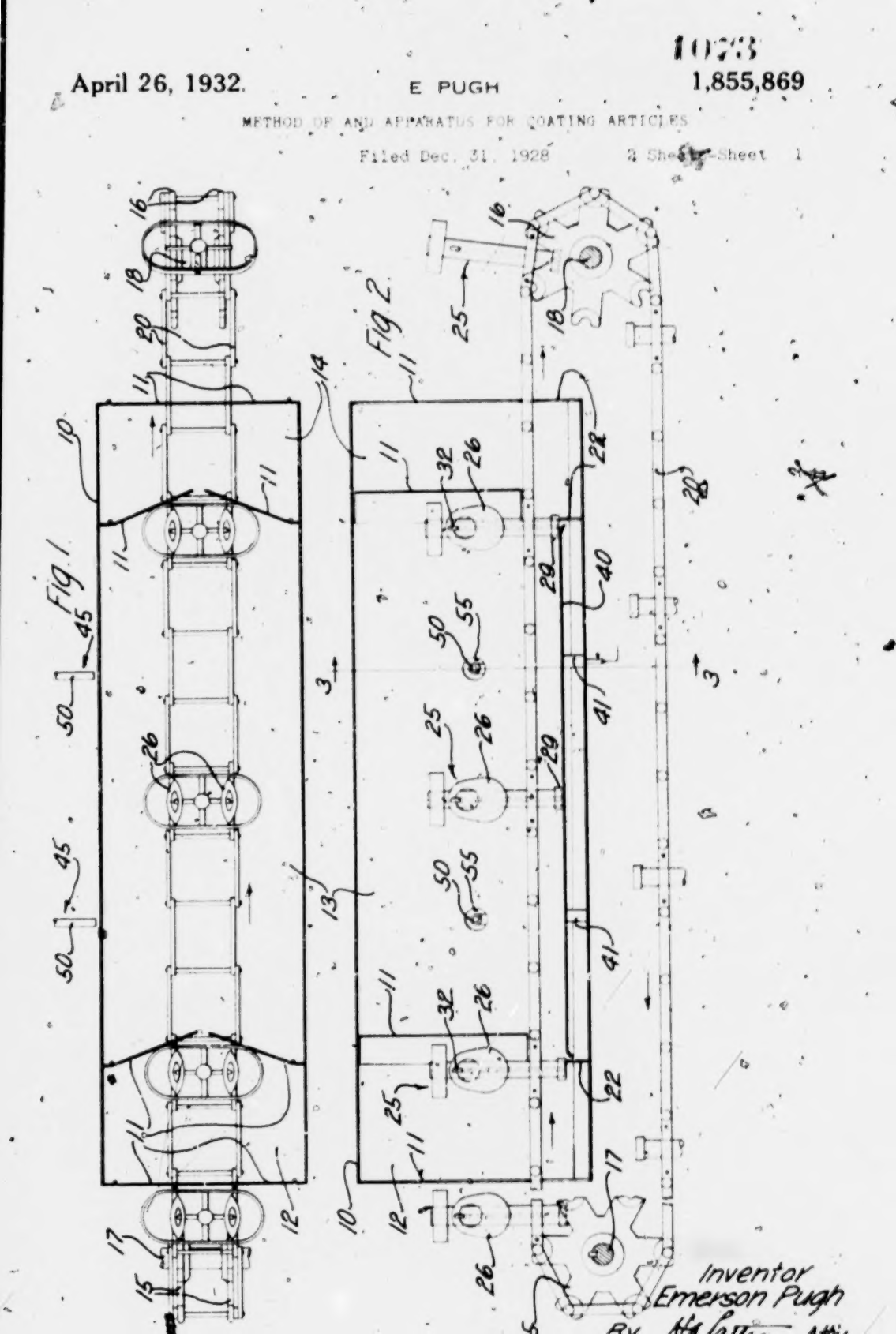

April 26, 1932. E PUGH 1075 1,855,869

METHOD OF AND APPARATUS FOR COATING ARTICLES

Filed Dec. 31, 1928 2 Sheets-Sheet

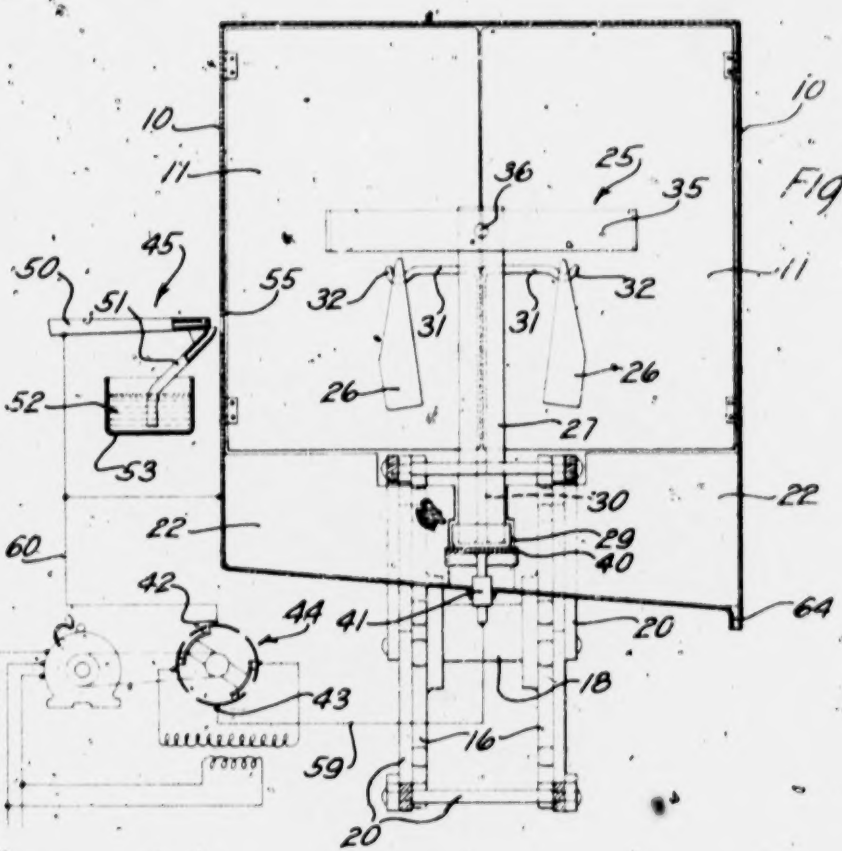

Fig. 3

Fig. 4

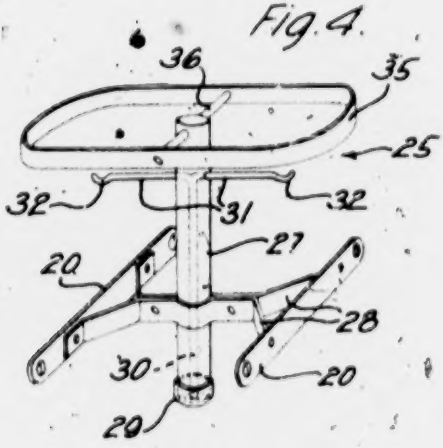

Inventor
Emerson Pugh
By H. A. Patterson Atty.

UNITED STATES PATENT OFFICE

EMERSON PUGH, OF DOWNERS GROVE, ILLINOIS, ASSIGNOR TO WESTERN ELECTRIC COMPANY, INCORPORATED, OF NEW YORK, N. Y., A CORPORATION OF NEW YORK

METHOD OF AND APPARATUS FOR COATING ARTICLES

Application filed December 31, 1928. Serial No. 329,393.

This invention relates to methods of and apparatus for coating articles, and more particularly to methods of and apparatus for finishing metal parts.

The principal objects of the invention are to provide a simple and expeditious method of and apparatus for applying material uniformly to exposed surfaces of articles.

In order to accomplish these objects in accordance with the invention, one embodiment thereof contemplates the conveying of metal parts or other articles to be coated through a closed chamber, the parts on the conveyor being connected in their passage therethrough to one terminal of a source of electrical energy of high potential. The opposite terminal of this source is connected to a nozzle through which an atomized spray of coating material is introduced into the chamber, thus giving the particles of the coating material suspended in the atmosphere of the chamber a charge opposite to that of the metal parts. These particles are thus selectively attracted to the uncoated portions of the parts in preference to the portions already covered by the solvent of the japan or other coating material so that they are deposited upon the uncoated surfaces thereof. To prevent the undue deposition of particles of coating material upon the interior of the chamber, the chamber wall is connected to the source of electrical energy so that it has the same potential as the nozzle.

It is believed that a complete understanding of the invention may be had from the following detailed description, taken in conjunction with the accompanying drawings, in which

Fig. 1 is a fragmentary plan view of an apparatus embodying features of the invention and which may be employed in practicing the method;

Fig. 2 is a front elevational view thereof with the front wall of the chamber removed;

Fig. 3 is an enlarged sectional view taken on line 3—3 of Fig. 2, showing the electrical equipment associated with the apparatus, and

Fig. 4 is an enlarged perspective view of one of the supports for carrying the parts to be coated.

Referring now to the drawings wherein the same reference numerals indicate similar parts throughout the various views, the numeral 10 designates a chamber made of sheet metal having four pairs of swinging doors 11—11 which are so mounted as to always return to a closed position. This arrangement divides the chamber into three compartments 12, 13 and 14 so that compartments 12 and 14 serve as air locks for the middle compartment 13. Partitions 22—22 (Fig. 3) are provided under each pair of swinging doors 11—11 to prevent the circulation of air between the compartments. At both ends of the chamber 10 are sprockets 15—15 and 16—16 suitably mounted on shafts 17 and 18, respectively, and adapted to engage operatively and support an endless sprocket chain 20 in its passage through the chamber. Secured to the chain at equal spaces throughout its length are supports 25 for carrying parts 26 to be coated.

Each of the supports 25 includes an insulator 27 rigidly held in an upright position by a pair of angular members 28—28 secured to the sides of the chain 20. A metal cap 29 secured to the lower end of the insulator 27 is connected to a metal rod 30 mounted in the center of the insulator and terminating near the upper end thereof in a pair of laterally extending arms 31—31 which are provided with hook portions 32—32 for supporting the parts 26 to be coated. At the upper end of the insulator 27 is a substantially rectangular guard 35 rigidly fastened thereto by a pin 36. This guard extends out beyond and surrounds the hook portions 32—32 so as to engage the swinging doors 11—11 and thus prevent injury to the parts 26 in their passage through the chamber.

A current conducting rail 40 for making contact with the metal caps 29 of the supports 25, is insulatively mounted on the bottom of the chamber 10 by means of insulating blocks 41—41 and is connected to the negative terminal 43 of a source of uni-directional electrical energy produced by a mechanical rectifier 44 (Fig. 3) from a source of alternating current (not shown). The positive terminal 42 of the rectifier 44 is connected to the walls of the chamber 10 and also to a plurality of atomizing devices 45 suitably mounted alongside the chamber, as illustrated in Figs. 1 and 3.

Each of the atomizing devices 45 comprises a nozzle 50 connected to a source of compressed air (not shown) and having its forward end attached to the upper end of a tube 51, the lower end of the tube being immersed in a liquified coating material 52, such as japan, lacquer, paint, etc., within a container 53. From the foregoing description it will be readily understood that upon compressed air being admitted to the nozzle 50, the emission of the air past the upper end of the tube 51 creates a vacuum therein whereby the liquefied coating material 52 is drawn up in the tube and the force of the air breaks the coating material into finely divided particles and blows it into the middle compartment 13 through apertures 55 in a wall of the chamber 10.

In practicing the invention, the shaft 17 is connected to and driven by any suitable source of power (not shown) so as to rotate the sprockets 15—15 keyed thereto and effect the movement of the sprocket chain 20 in the direction indicated by the arrows in Figs. 1 and 2. With the negative terminal 43 of the mechanical rectifier 44 connected to the current conducting rail 40 by a conductor 59, and the positive terminal 42 connected to the chamber 10 and the nozzle 50 by a conductor 60, the mechanical rectifier is operated to create a uni-directional current of high potential. The parts 26 to be coated are then placed on the hook portions 32—32 of the metal rods 30, and as the guards 35 engage and open the doors 11—11 in passing from compartment 12 into compartment 13 of the chamber 10, the metal caps 29 make contact with the current conducting rail 40. This contact connects the parts 26 to the negative terminal of the source of uni-directional electrical energy through laterally extending arms 31—31, metal rod and cap 30, 29, respectively, contact rail 40, and conductor 59 to the negative terminal 43 of the mechanical rectifier 44. As has been previously explained, the nozzle 50 of the atomizing device 45 is connected to a source of compressed air to effect the introduction of a coating material 52 in finely divided particles into the compartment 13. Since the atomizing device is connected to the positive terminal of the source of uni-directional electrical energy through nozzle 50, conductor 60 to the positive terminal 42 of the mechanical rectifier 44, the particles of coating material are given a positive charge as they emerge from the atomizing device 45 into the compartment 13 through apertures 55 in the chamber 10. The negatively charged parts 26 to be coated attract the positively charged particles of coating material so that the latter is deposited upon the surface of the parts 26 to form coatings thereon. A uniform coating of each part is assured, due to the fact that as the particles of the coating material are deposited thereon, the solvent of the coating material acts as a dielectric, whereby the positive charge is intensified at the uncoated spots on the parts 26 to better attract the particles of coating material thereto.

The difference of electrical potential between the parts 26 to be coated and the atomizing devices 45 can be varied greatly, depending on size of the chamber, the characteristics of the particular coating material used and the speed imparted to the conveying chain 20, but the voltage should not be of such a value as to cause arcs between the parts being coated and the atomizing devices or chamber walls. The connecting of the walls of the chamber 10 and the atomizing devices 45 to the same terminal of the source of uni-directional electrical energy produces positive charges on both the coating material 52 and the walls of the chamber 10 so that the particles of coating material are repelled from the walls to prevent undue deposition thereon. In order to carry off any excess coating material, the bottom of the chamber 10 is sloped toward a drain 64 (Fig. 3).

As the finished parts emerge from the chamber 10, they are removed from the supports 25 and uncoated parts are placed on the hook portions 32—32 and they in turn are carried through the chamber 10, so that the process is a continuous one.

It will be understood that the embodiment of the invention herein described and illustrated is merely a convenient and useful form of the invention which is capable of many other modifications without departing from the spirit and scope of the invention.

What is claimed is:

1. A method of applying a finish to an article of manufacture, consisting in finely dividing a coating material, surrounding the article of manufacture to be coated with an atmosphere having the finely divided material suspended therein, and subjecting the article of manufacture and the particles of the material to a difference of electrical potential to cause the material to be attracted to and deposited upon the article of manufacture.

2. A method of applying a finish to an article of manufacture, consisting in producing a uni-directional current of high voltage in an

atmosphere, introducing a coating material in a finely divided form into the atmosphere, and subjecting the article of manufacture to be coated to the current and the atmosphere for a predetermined period of time to cause electrical deposition of the material upon the article of manufacture.

3. A method of applying a finish to an article of manufacture, consisting in enclosing an article of manufacture to be coated, connecting a supply of coating material and the article of manufacture to be coated to opposite terminals of a source of uni-directional current of high voltage, introducing an atomized coating material into the enclosed atmosphere, and subjecting the enclosure to the same potential as the coating material to repel the particles of coating material therefrom as they are attracted and deposited upon the article of manufacture.

4. In an apparatus for applying a finish to an article of manufacture, a chamber for enclosing the article of manufacture to be coated, an air lock therefor, means for introducing into the chamber coating material in finely divided form, means for conveying the article of manufacture through the air lock into the chamber, means for connecting the article of manufacture for a predetermined period of time to one terminal of a source of uni-directional energy, and means for connecting the coating material to the opposite terminal of the source of electrical energy to cause the deposition of the coating material upon the article of manufacture.

5. In an apparatus for applying a finish to an article of manufacture, a closed chamber for receiving an article of manufacture to be coated, an atomizing device for introducing a spray of coating material into the chamber and a source of electrical energy associated with the chamber for subjecting the article of manufacture to one potential and the atomizing device and the chamber to an opposite potential to cause the deposition of the coating material upon the article of manufacture and prevent the deposition thereof upon the chamber wall.

6. In an apparatus for applying a finish to an article of manufacture, a chamber for enclosing the articles of manufacture to be coated, means for conveying the articles of manufacture therethrough at predetermined intervals, means for connecting the articles of manufacture to one terminal of a source of electrical energy at a predetermined time, an atomizing device for injecting particles of a coating material into the chamber, and means for connecting the atomizing device and the walls of the chamber to the opposite terminal of the source of electrical energy to repel the particles of coating material from the walls as they are attracted to and deposited upon the articles of manufacture.

7. A method of applying a finish to an article of manufacture consisting in enclosing a space of predetermined size, introducing into the enclosed atmosphere a coating material in a finely divided form, conveying the articles of manufacture to be coated through the enclosed atmosphere in spaced relation, and subjecting the articles of manufacture and the coating material to a difference of electrical potential to cause the coating material to be deposited on the articles of manufacture.

8. A method of supplying a finish to an article of manufacture consisting in enclosing an article of manufacture to be coated, connecting a supply of coating material and the article of manufacture to be coated to opposite terminals of a source of uni-directional current of high voltage, introducing an atomized coating material into the enclosed atmosphere, subjecting the enclosure to the same potential as the coating material to repel the particles of coating material therefrom as they are attracted and deposited upon the articles of manufacture, and imparting movement to the article of manufacture relative to the enclosure.

9. In an apparatus for applying a finish to an article of manufacture, a chamber for enclosing the articles of manufacture to be coated, a conveyor for moving the articles of manufacture therethrough at predetermined intervals, means carried by the conveyor for electrically connecting the articles of manufacture to one terminal of a source of electrical energy at a predetermined time, an atomizing device for injecting particles of a coating material into the chamber, and means for connecting the atomizing device and the walls of the chamber to the opposite terminal of the source of electrical energy to repel the particles of coating material from the walls as they are attracted to and deposited upon the articles of manufacture.

10. In an apparatus for applying a finish to an article of manufacture, a chamber for enclosing the articles of manufacture to be coated, a conveyor for moving the articles of manufacture therethrough at predetermined intervals, means carried by the conveyor for carrying the articles of manufacture, means for cooperating with said carrying means for electrically connecting the articles of manufacture to one terminal of a source of electrical energy at a predetermined time, an atomizing device for injecting particles of the coating material into the chamber, and means for connecting the atomizing device and the walls of the chamber to the opposite terminal of the source of electrical energy to repel the particles of coating material from the walls as they are attracted to and deposited upon the articles of manufacture.

11. A method of applying a finish to an article of manufacture, consisting in enclosing a space of predetermined size, introduc-

ing into the enclosed atmosphere a coating material in a finely divided form, conveying the article of manufacture to be coated through the enclosed atmosphere, and subjecting the article of manufacture and the coating material to a difference of electrical potential to cause the coating material to be deposited on the article of manufacture.

In witness whereof, I hereunto subscribe my name this 19th day of December, A. D. 1928.

EMERSON PUGH.

DISCLAIMER

1,855,869.—*Emerson Pugh*, Downers Grove, Ill. METHOD OF AND APPARATUS FOR COATING ARTICLES. Patent dated April 26, 1932. Disclaimer filed November 10, 1936, by the patentee; the assignee, *Western Electric Company, Inc.*, assenting and concurring.

Hereby enters this disclaimer to claims 2 and 11 in said specification.

[*Official Gazette, December 8, 1936.*]

May 15, 1934. W. A. DARRAH 1,958,406

ELECTRICAL SPRAYING DEVICE

Filed Dec. 27, 1929

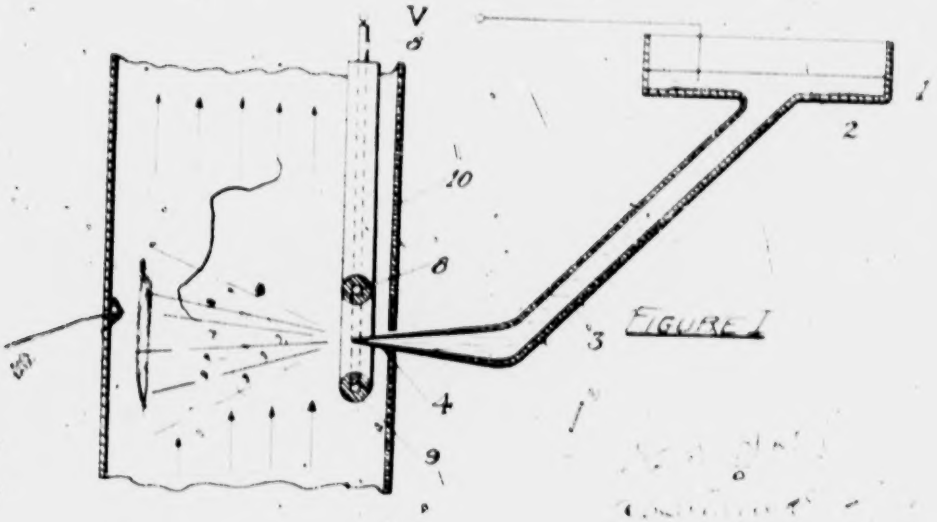

FIGURE I

FIGURE II

FIGURE III

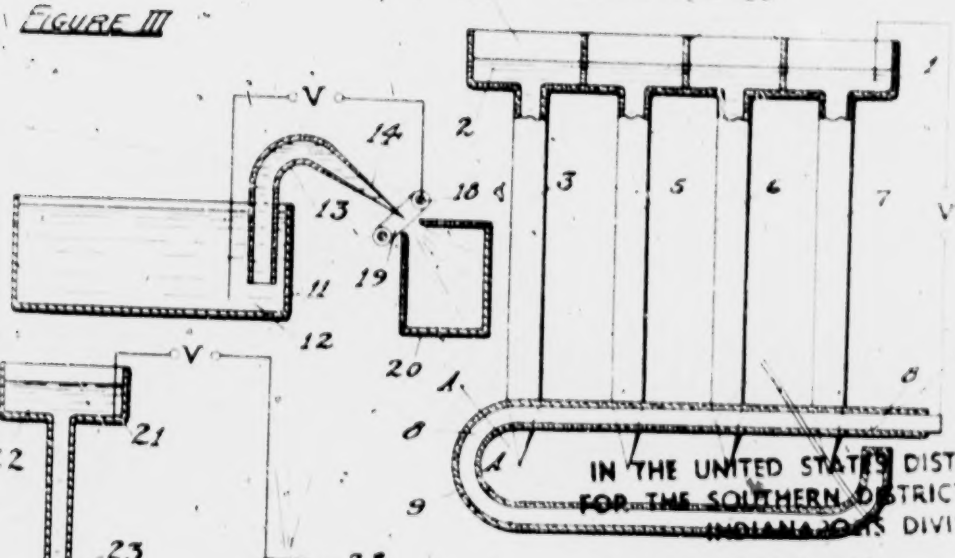

FIGURE IV

IN THE UNITED STATES DISTRICT COURT
FOR THE SOUTHERN DISTRICT OF INDIANA
INDIANAPOLIS DIVISION

BINKS MANUFACTURING CO.

V.

RANSBURG ELECTRO-COATING CORP.

Exh. No.

Richard A. Darrah.

INVENTOR

A current conducting rail 40 for making contact with the metal caps 29 of the supports 25, is insulatively mounted on the bottom of the chamber 10 by means of insulating blocks 41—41 and is connected to the negative terminal 43 of a source of uni-directional electrical energy produced by a mechanical rectifier 44 (Fig. 3) from a source of alternating current (not shown). The positive terminal 42 of the rectifier 44 is connected to the walls of the chamber 10 and also to a plurality of atomizing devices 45 suitably mounted alongside the chamber, as illustrated in Figs. 1 and 3.

Each of the atomizing devices 45 comprises a nozzle 50 connected to a source of compressed air (not shown) and having its forward end attached to the upper end of a tube 51, the lower end of the tube being immersed in a liquified coating material 52, such as japan, lacquer, paint, etc., within a container 53. From the foregoing description it will be readily understood that upon compressed air being admitted to the nozzle 50, the emission of the air past the upper end of the tube 51 creates a vacuum therein whereby the liquefied coating material 52 is drawn up in the tube and the force of the air breaks the coating material into finely divided particles and blows it into the middle compartment 13 through apertures 55 in a wall of the chamber 10.

In practicing the invention, the shaft 17 is connected to and driven by any suitable source of power (not shown) so as to rotate the sprockets 15—15 keyed thereto and effect the movement of the sprocket chain 20 in the direction indicated by the arrows in Figs. 1 and 2. With the negative terminal 43 of the mechanical rectifier 44 connected to the current conducting rail 40 by a conductor 59, and the positive terminal 42 connected to the chamber 10 and the nozzle 50 by a conductor 60, the mechanical rectifier is operated to create a uni-directional current of high potential. The parts 26 to be coated are then placed on the hook portions 32—32 of the metal rods 30, and as the guards 35 engage and open the doors 11—11 in passing from compartment 12 into compartment 13 of the chamber 10, the metal caps 29 make contact with the current conducting rail 40. This contact connects the parts 26 to the negative terminal of the source of uni-directional electrical energy through laterally extending arms 31—31, metal rod and cap 30, 29, respectively, contact rail 40, and conductor 59 to the negative terminal 43 of the mechanical rectifier 44. As has been previously explained, the nozzle 50 of the atomizing device 45 is connected to a source of compressed air to effect the introduction of a coating material 52 in finely divided particles into the compartment 13. Since the atomizing device is connected to the positive terminal of the source of uni-directional electrical energy through nozzle 50, conductor 60 to the positive terminal 42 of the mechanical rectifier 44, the particles of coating material are given a positive charge as they emerge from the atomizing device 45 into the compartment 13 through apertures 55 in the chamber 10. The negatively charged parts 26 to be coated attract the positively charged particles of coating material so that the latter is deposited upon the surface of the parts 26 to form coatings thereon. A uniform coating of each part is assured, due to the fact that as the particles of the coating material are deposited thereon, the solvent of the coating material acts as a dielectric, whereby the positive charge is intensified at the uncoated spots on the parts 26 to better attract the particles of coating material thereto.

The difference of electrical potential between the parts 26 to be coated and the atomizing devices 45 can be varied greatly, depending on size of the chamber, the characteristics of the particular coating material used and the speed imparted to the conveying chain 20, but the voltage should not be of such a value as to cause arcs between the parts being coated and the atomizing devices or chamber walls. The connecting of the walls of the chamber 10 and the atomizing devices 45 to the same terminal of the source of uni-directional electrical energy produces positive charges on both the coating material 52 and the walls of the chamber 10 so that the particles of coating material are repelled from the walls to prevent undue deposition thereon. In order to carry off any excess coating material, the bottom of the chamber 10 is sloped toward a drain 64 (Fig. 3).

As the finished parts emerge from the chamber 10, they are removed from the supports 25 and uncoated parts are placed on the hook portions 32—32 and they in turn are carried through the chamber 10 so that the process is a continuous one.

It will be understood that the embodiment of the invention herein described and illustrated is merely a convenient and useful form of the invention which is capable of many other modifications without departing from the spirit and scope of the invention.

What is claimed is:

1. A method of applying a finish to an article of manufacture, consisting in finely dividing a coating material, surrounding the article of manufacture to be coated with an atmosphere having the finely divided material suspended therein, and subjecting the article of manufacture and the particles of the material to a difference of electrical potential to cause the material to be attracted to and deposited upon the article of manufacture.

2. A method of applying a finish to an article of manufacture, consisting in producing a uni-directional current of high voltage in an

atmosphere, introducing a coating material in a finely divided form into the atmosphere, and subjecting the article of manufacture to be coated to the current and the atmosphere for a predetermined period of time to cause electrical deposition of the material upon the article of manufacture.

3. A method of applying a finish to an article of manufacture, consisting in enclosing an article of manufacture to be coated, connecting a supply of coating material and the article of manufacture to be coated to opposite terminals of a source of uni-directional current of high voltage, introducing an atomized coating material into the enclosed atmosphere, and subjecting the enclosure to the same potential as the coating material to repel the particles of coating material therefrom as they are attracted and deposited upon the article of manufacture.

4. In an apparatus for applying a finish to an article of manufacture, a chamber for enclosing the article of manufacture to be coated, an air lock therefor, means for introducing into the chamber coating material in finely divided form, means for conveying the article of manufacture through the air lock into the chamber, means for connecting the article of manufacture for a predetermined period of time to one terminal of a source of uni-directional energy, and means for connecting the coating material to the opposite terminal of the source of electrical energy to cause the deposition of the coating material upon the article of manufacture.

5. In an apparatus for applying a finish to an article of manufacture, a closed chamber for receiving an article of manufacture to be coated, an atomizing device for introducing a spray of coating material into the chamber and a source of electrical energy associated with the chamber for subjecting the article of manufacture to one potential and the atomizing device and the chamber to an opposite potential to cause the deposition of the coating material upon the article of manufacture and prevent the deposition thereof upon the chamber wall.

6. In an apparatus for applying a finish to an article of manufacture, a chamber for enclosing the articles of manufacture to be coated, means for conveying the articles of manufacture therethrough at predetermined intervals, means for connecting the articles of manufacture to one terminal of a source of electrical energy at a predetermined time, an atomizing device for injecting particles of a coating material into the chamber, and means for connecting the atomizing device and the walls of the chamber to the opposite terminal of the source of electrical energy to repel the particles of coating material from the walls as they are attracted to and deposited upon the articles of manufacture.

7. A method of applying a finish to an article of manufacture consisting in enclosing a space of predetermined size, introducing into the enclosed atmosphere a coating material in a finely divided form, conveying the articles of manufacture to be coated through the enclosed atmosphere in spaced relation, and subjecting the articles of manufacture and the coating material to a difference of electrical potential to cause the coating material to be deposited on the articles of manufacture.

8. A method of supplying a finish to an article of manufacture consisting in enclosing an article of manufacture to be coated, connecting a supply of coating material and the article of manufacture to be coated to opposite terminals of a source of uni-directional current of high voltage, introducing an atomized coating material into the enclosed atmosphere, subjecting the enclosure to the same potential as the coating material to repel the particles of coating material therefrom as they are attracted and deposited upon the articles of manufacture, and imparting movement to the article of manufacture relative to the enclosure.

9. In an apparatus for applying a finish to an article of manufacture, a chamber for enclosing the articles of manufacture to be coated, a conveyor for moving the articles of manufacture therethrough at predetermined intervals, means carried by the conveyor for electrically connecting the articles of manufacture to one terminal of a source of electrical energy at a predetermined time, an atomizing device for injecting particles of a coating material into the chamber, and means for connecting the atomizing device and the walls of the chamber to the opposite terminal of the source of electrical energy to repel the particles of coating material from the walls as they are attracted to and deposited upon the articles of manufacture.

10. In an apparatus for applying a finish to an article of manufacture, a chamber for enclosing the articles of manufacture to be coated, a conveyor for moving the articles of manufacture therethrough at predetermined intervals, means carried by the conveyor for carrying the articles of manufacture, means for cooperating with said carrying means for electrically connecting the articles of manufacture to one terminal of a source of electrical energy at a predetermined time, an atomizing device for injecting particles of the coating material into the chamber, and means for connecting the atomizing device and the walls of the chamber to the opposite terminal of the source of electrical energy to repel the particles of coating material from the walls as they are attracted to and deposited upon the articles of manufacture.

11. A method of applying a finish to an article of manufacture, consisting in enclosing a space of predetermined size, introduc-

ing into the enclosed atmosphere a coating material in a finely divided form, conveying the article of manufacture to be coated through the enclosed atmosphere, and subjecting the article of manufacture and the coating material to a difference of electrical potential to cause the coating material to be deposited on the article of manufacture.

In witness whereof, I hereunto subscribe my name this 19th day of December, A. D. 1928.

EMERSON PUGH.

DISCLAIMER

1,855,869.—*Emerson Pugh*, Downers Grove, Ill. METHOD OF AND APPARATUS FOR COATING ARTICLES. Patent dated April 26, 1932. Disclaimer filed November 10, 1936, by the patentee; the assignee, *Western Electric Company, Inc.*, assenting and concurring.

Hereby enters this disclaimer to claims 2 and 11 in said specification.

[*Official Gazette December 8, 1936.*]

1081

May 15, 1934. W. A. DARRAH 1,958,406

ELECTRICAL SPRAYING DEVICE

Filed Dec. 27, 1926

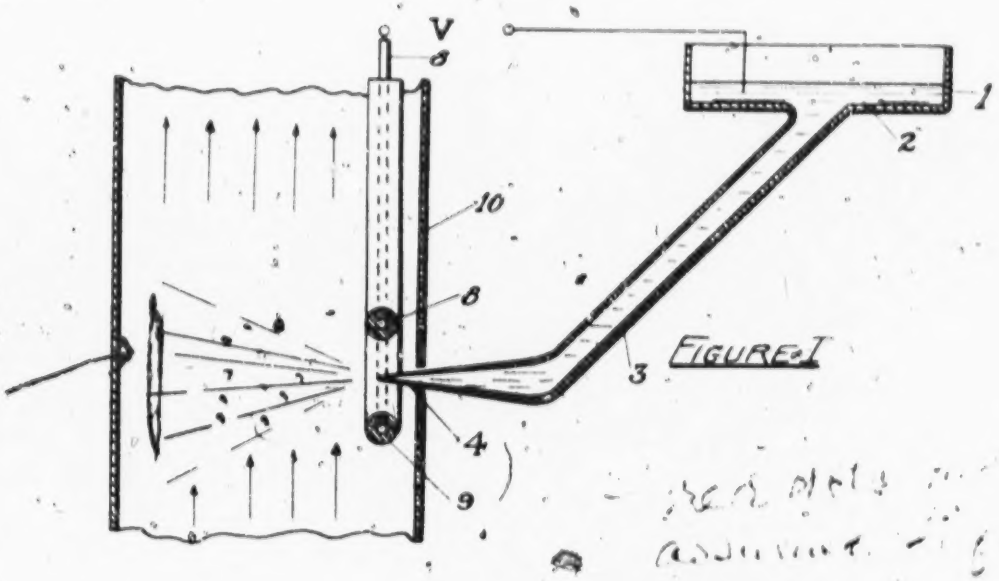

FIGURE I

FIGURE II

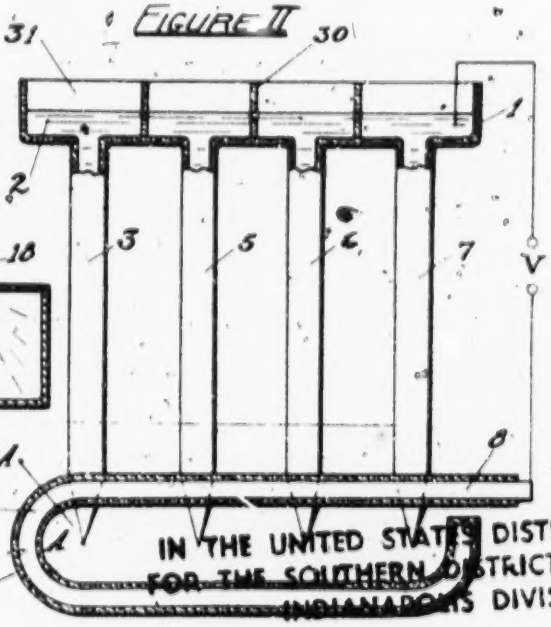

FIGURE III

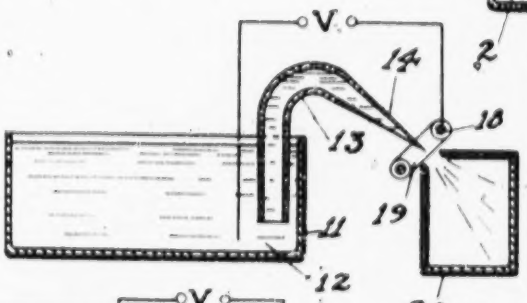

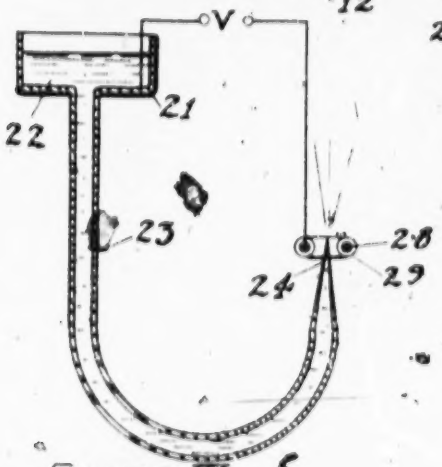

FIGURE IV

IN THE UNITED STATES DISTRICT COURT
FOR THE SOUTHERN DISTRICT OF INDIANA
INDIANAPOLIS DIVISION

BINKS MANUFACTURING CO.

V.

RANSBURG ELECTRO-COATING CORP.

CIVIL ACTION
NO. IP 56-C-262

Exh. No. _____

Richard W. Darrah

INVENTOR

Patented May 15, 1934

1,958,406

1083

UNITED STATES PATENT OFFICE

1,958,406

ELECTRICAL SPRAYING DEVICE

William A. Darrah, Chicago, Ill.

Application December 27, 1926, Serial No. 157,233

9 Claims. (Cl. 299—1)

This invention relates to electrical equipment which may be used for moving, spraying, atomizing or treating fluids and probably more nearly resembles an atomizer than any other type of common equipment, although it differs therefrom in many essential points.

One of the objects of this device is to produce a finely divided liquid spray by electrical forces and without the assistance of moving air streams or other means which are commonly employed for this purpose.

Another object of this invention is to provide a means for causing an action which may be either physical or chemical between gases and liquids.

Another object of this invention is to provide means for collecting or precipitating dust or suspended particles in gases.

Other objects will appear from the following description, claims and attached drawing.

The invention is exemplified in the combination and arrangement of parts shown in the accompanying drawing and described in the following specifications, and it is more particularly pointed out in the appended claims.

In the drawing:—

Fig. I shows a side elevation partly in section of one arrangement of this device;

Fig. II is a front elevation also partly in section showing a portion of the device illustrated in Fig. I;

Figure III shows a modified arrangement of this equipment;

Fig. IV shows a further modification.

Referring to the drawing, (1) represents a reservoir or container for liquid which is indicated by (2). The liquid may be either a conductor or an insulator as the results appear to be substantially the same. (3) represents a tube or pipe extending from reservoir (1) and may be of any desired material although I prefer an insulating substance. Tube (3) is drawn out into an extending point or nozzle (4) preferably relatively long and thin and with walls which are preferably thin. It is desirable to use insulating material for the nozzle (4).

A series of similar tubes (5), (6) and (7) are shown in Fig. II. Obviously as many tubes as are required may be employed. A conductor (8) is positioned near the end of nozzle (4) and may either be in the form of a circle or loop or a single straight or curved conductor as designed. Inasmuch as relatively high potentials are employed with this equipment I have found it convenient to insulate conductor (8) with a shell (9) although this feature is optional and depends upon the design of the equipment as well as its use. A source of potential which may be either direct current or alternating current is indicated by the letter "V" and is connected so that one terminal makes contact with conductor (8) and the other terminal with the fluid (2) in container (1). A duct or housing (10) is shown surrounding the end of nozzle (4) and the conductor (8). The object of duct or housing (10) is to confine the flow of gases or fluids which are subjected to the action of the spray produced by the equipment here described. The duct may be of either conducting or insulating material as desired. For the ordinary obvious reasons of electrical design it is desirable to have the portion of the duct (10) which is adjacent to the conductor, nozzle, etc., of insulating material.

Referring to Fig. III (11) indicates a container filled with fluid (12) into which tube or pipe (13) is placed. A nozzle (14) is formed at the end of pipe (13) and a conductor (18) is placed adjacent to the end of nozzle (14) as previously described. A source of potential "V" is connected as shown and a duct (20) is placed adjacent to the end of the nozzle (14) to confine the spray produced and direct the fluids which may come in contact with the spray. (19) indicates insulation applied around conductor (18).

Referring to Fig. IV (21) indicates a container holding fluid (22) and communicating to pipe (23) which is formed with a nozzle (24) at its end. A conductor (28) is shown adjacent the end of nozzle (24) surrounded with insulation (29) and connected to a source of potential "V" in the manner shown.

I have found that when equipment is assembled in substantially the manner indicated on the attached drawing, or with the obvious equivalent or modifications an exceedingly fine spray of drops of liquid or fluid particles are produced and many of the drops appear to carry a considerable electrical charge. The effect appears to be obtained with either direct current or alternating current. I have obtained results with potentials as low as one thousand volts applied between the conductor (8) and the liquid (2). I prefer to use much higher voltages preferably of 20,000 to 50,000 volts and the effects thus produced are very much more pronounced. The diameter of the nozzle at its tip may be varied over quite a large range, the effect being apparently merely to modify the size of the drops which are produced and, therefore, the quantity of fluid which passes through the nozzle. The quantity of fluid which passes through the nozzle is also very greatly increased by increasing the potential dif-

ference applied between the fluid in the nozzle and the conductor (8). I have also found that applying potential to only one of the two terminals will permit the production of the spray outlined above, but obviously with greatly reduced volume.

I have been able to spray such materials as water, various solutions of materials in water, alcohol, oils, dextrine and some low melting point alloys and metals.

I have found that the position of the conductor (8) with reference to the nozzle (4) is of considerable importance in effecting the volume, nature and direction of the discharge of the spray. In general I have secured best results when the conductor forms a loop around the terminal of nozzle (4) the loop being in a plane which is approximately perpendicular to the axis of the nozzle and located a small fraction of an inch back from the end of the nozzle. I do not wish to be confined to the location here described for the reason that the spray may be produced in large volume when the relative position of the conductor and nozzle have practically an infinite number of different locations from that described above. I have found that satisfactory results may be obtained with a single conductor as for example the portion of conductor (8) in Fig. II between the line A—A and its terminal.

It would appear that when the proper difference of potential is applied between the fluid in nozzle (4) and the conductor (8) that electrostatic forces cause the rapid throwing of small particles of liquid from the end of the nozzle. I have produced particles of liquid so small that they appear to remain suspended indefinitely in air at ordinary room conditions and so charged that they will oscillate in phase with variations in potential from a nearby electrical conductor. Such particles may be made to move so as to appear like ellipses or sine waves and appear to have an unusual resistance to evaporation partly due to the charge which they carry, and also the cooling effect.

Such particles I have found have the property of separating suspended materials floating in gases. For example smoke is almost instantaneously removed from gases by subjecting the smoke to the action of the spray produced by this equipment. Further the effect appears to be present whether alternating current or direct current is employed and for many commercial reasons I, therefore, prefer to use alternating current with this equipment.

I have noticed that more marked results are obtained when conductor (8) has a relatively small radius as for example similar to a fine wire. I have also noticed that better results appear to be obtained when the insulation (9) which surrounds conductor (8) is of only sufficient thickness to provide proper insulation. I have found that greater thickness of insulation around conductor (8) appears to distort the lines of electric force reducing the effect desired. In fact substituting a tube of insulating material substantially concentric with nozzle (4) of the insulating shell (9) around conductor (8), considerably reduces the spray effect.

On the other hand, the thickness of the wall of the nozzle (4) should be as small as possible. It would appear that thicker walls of nozzle (4) tend to distort the lines of electric force and distribute them over a considerable area instead of concentrating them near the end of nozzle (4).

I have found that the spray produced by this equipment is in good condition for rapid chemical action. For example oil sprayed with this equipment burns quite readily or if a spray of oil produced in this manner is directed into an atmosphere of reacting gas such as chlorine, the oil drops are quite completely chlorinated. Naturally effects of this kind can be controlled to some extent as far as degree and time is concerned by the temperature of the reacting materials, pressure and other obvious factors. Oil and chlorine are mentioned here merely as typifying the broad class of reactions which can readily be made to take place between liquids and gases with this equipment. Other examples of this location may be found in such materials as phenols and related compounds which may be oxidized, chlorinated or otherwise combined under conditions which will be obvious.

As a general illustration of the operation of this equipment it may be stated that smoke or other dust containing gases may be passed through duct (10) as for example in the direction of the arrows and subjected to the action of one or more spray devices of the type here described. Duct (10) may, of course, be vertical or horizontal and the flow of gases may be in any desired direction as best suits the specific case at hand.

The particles which compose the spray travel in approximately straight lines for a short distance after leaving the nozzle and then may be deflected or directed if desired by bringing conductors in close proximity to them. If left to themselves they frequently appear to take a parabolic course due apparently to the action of gravity. A slowly moving stream of gas or air, however, will readily carry the particles along with it and by placing conductors at desired points the moving particles may be directed in almost any desired direction.

It will be obvious from the description which has been given that this invention relates to a basic principle and a great many obvious modifications may be made in the specific arrangement of equipment or of portions, shape or size of the equipment, and still fall within the scope of this invention.

It will be obvious that I may equip container (1) as illustrated in Fig. II with one or more partitions as shown at (30) in which case I may have sprays carrying different materials from a multiple of nozzles and thus obtain a reaction between electrified sprays of different materials. Under these conditions electrical combination seems to take place with peculiar ease, and chemical reactions not readily obtained under normal conditions, may be obtained in this manner. If partition (30) is made of a conducting material no other electrical connection is necessary. If partition (30) is made of insulating material I may make individual contacts with each portion of container (1), thus causing two sprays of different materials to carry either like or unlike electrical charges as I prefer. Many obvious modifications of this arrangement will be apparent such as the use of two separate containers or the use of several sprays directed in any desired angle, for obtaining the most satisfactory admixture.

This equipment may be employed to obtain the oxidation of various materials, using a spray of the material to be oxidized introduced into an atmosphere of oxygen or gases containing oxygen. Considerable quantities of hydrogen peroxide may be produced by spraying water with this equipment into a current of air.

In a similar manner reducing reactions may

be carried out such as the addition of hydrogen to various compounds sprayed into it. Another example of the use of this equipment is the spraying of a solution of alkali such as hydroxide of soda into an atmosphere of carbonmonoxide when the usual addition products such as oxalates, etc., may be obtained.

When this equipment is used as a means of collecting or precipitating dust or suspended particles it will be apparent that the dust is collected on the electrified spray and may then be allowed to fall to the bottom of a collector or made to adhere to walls or other desired portions where it may be readily removed. It will be apparent that this method of removing suspended particles from gases is much more practical than the present methods.

When alternating current is applied to this device the size of the drops is smaller when the frequency is higher and vice versa.

Having now fully described my invention what I claim as new and wish to secure by Letters Patent in the United States, is as follows:

1. A device for spraying fluids consisting of a nozzle of insulating material, formed with a point at one end and a conductor spaced therefrom and extending transversely to said point, said conductor being entirely surrounded with an unbroken layer of insulating material, a source of liquid storage communicating with said nozzle and a device for creating a difference of electric potential between the fluid in said nozzle and said adjacent conductor.

2. A device for spraying fluids consisting of a pointed nozzle of insulating material and an electrically charged conductor entirely surrounded by an unbroken layer of insulation, said conductor being located adjacent the point of said nozzle and arranged to diffuse the discharge from said nozzle.

3. A device for spraying fluids consisting of a pointed nozzle connected to a source of liquid, a conductor completely surrounded with an unbroken layer of insulation, and arranged in a plane substantially perpendicular to said nozzle and adjacent thereto, and a device for creating an electric difference of potential between said conductor and the fluid of said nozzle.

4. In a device for spraying fluids a nozzle member of insulating material ending in a point, and a conductor completely surrounded by an unbroken layer of solid insulation located near the pointed end of said nozzle and arranged to diffuse the discharge from said nozzle.

5. In a spraying device an attenuated nozzle of insulating material, a conductor adjacent thereto and completely surrounded with an unbroken layer of solid insulation, and a device for creating an alternating electric field, between said conductor and said nozzle, said nozzle and said adjacent conductor being arranged to diffuse the discharge from said nozzle.

6. The combination of a fluid conducting nozzle of insulating material terminating in a point and an electric conductor distributed over a relatively large area, but spaced away from said point, and serving with said fluid in said nozzles as the terminals of a high tension electric field with the portions of said conductor forming the terminals of said field, completely surrounded with an unbroken layer of insulation.

7. A fluid conducting nozzle of insulating material having a fine discharge point with a single opening, a reservoir containing fluid connected to said nozzle and an electric conductor covering a large area and spaced away from said nozzles and forming with the fluid therein the terminals of an electric field, the portions of said electric conductor forming with said nozzles the terminals of an electric field being insulated from the fluid within said nozzle by means of an unbroken layer of solid insulating material, thereby preventing arcing discharge.

8. The combination of a liquid container, a fluid conducting nozzle of insulating material terminating in a point and connected to receive liquid from a container, an electric conductor spaced away from said nozzle and extending over a considerable area, thereby dispersing the discharge from said nozzle, said conductor serving with said fluid in said nozzle as the terminals of a high tension electric field, said electric conductor being completely surrounded with an unbroken layer of solid insulation to prevent arcing discharge between said conductor and said fluid in said nozzle, and a housing surrounding the point of said nozzle.

9. The combination of a liquid container, a fluid conducting nozzle of insulating material terminating in a point and connected to receive liquid from said container, an electric conductor spaced away from said nozzle and extending over a considerable area, thereby dispersing the discharge from said nozzle, said conductor serving with said fluid in said nozzle as the terminals of a high tension electric field, said electric conductor being completely surrounded with an unbroken layer of solid insulation to prevent arcing discharge between said conductor and said fluid in said nozzle, a housing adjacent the point of said nozzle and arranged to receive the fluid passing therefrom.

WILLIAM A. DARRAH.

1087

Nov. 12, 1940. H. A. WINTERMUTE 2,221,338

DEPOSITION OF MATERIAL

Filed Oct. 21, 1936 2 Sheets-Sheet 1

Fig. 1.

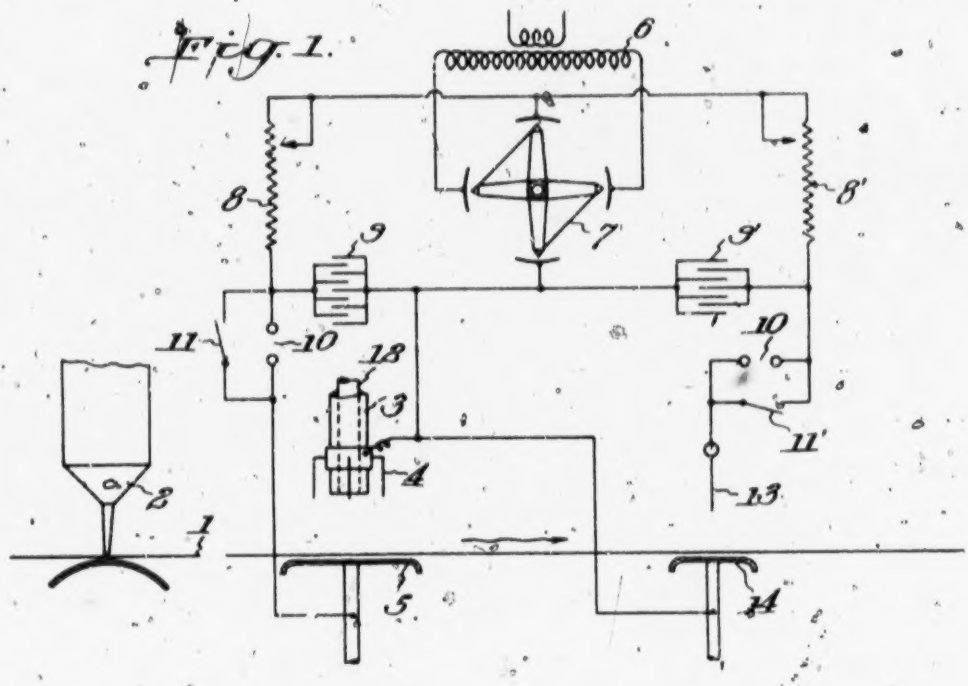

Fig. 2.

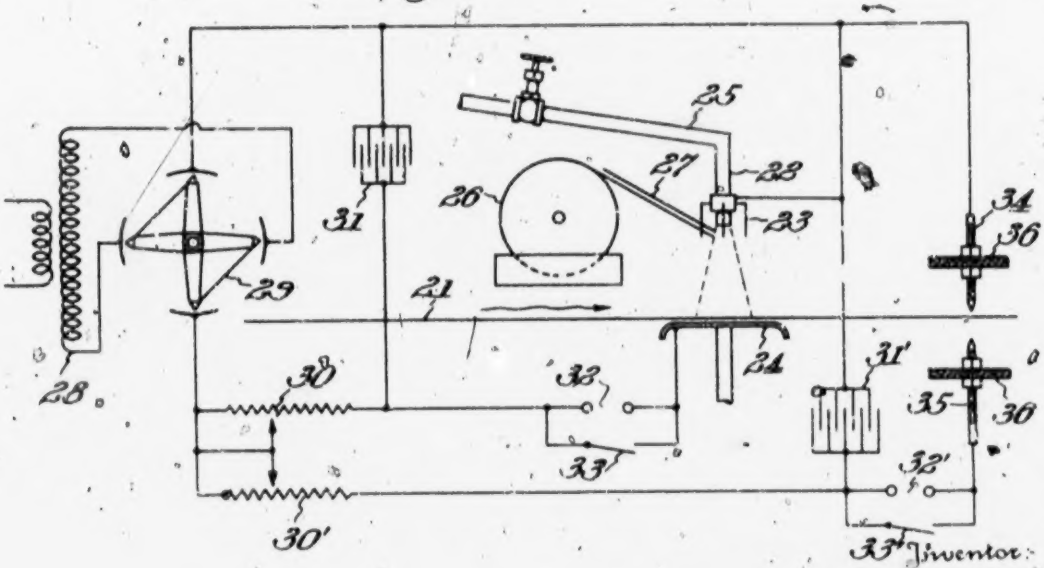

Inventor:

Harry A. Wintermute

By Potter, Pierce & Schaffer

Attorneys

1089

Nov. 12, 1940. H. A. WINTERMUTE 2,221,338

DEPOSITION OF MATERIAL

Filed Oct. 21, 1936 2 Sheets-Sheet 2

Fig. 3.

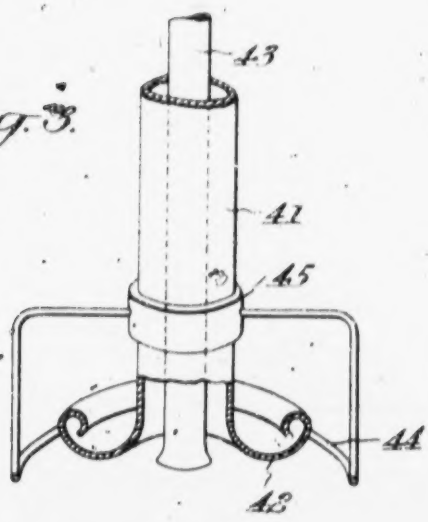

Fig. 4.

Fig. 5.

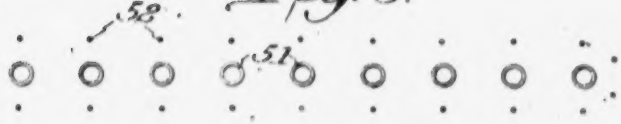

Inventor:
Harry A. Wintermute
By Potter, Pierce & Scheffler
Attorneys

Patented Nov. 12, 1940

2,221,338

UNITED STATES PATENT OFFICE

2,221,338

DEPOSITION OF MATERIAL

Harry A. Wintermute, Plainfield, N. J., assignor to Research Corporation, New York, N. Y., a corporation of New York

Application October 21, 1936, Serial No. 106,863

21 Claims. (Cl. 91—8)

This invention relates to the deposition of materials, particularly for the formation of coatings by depositing finely divided materials on surfaces. The invention comprises novel methods and apparatus for effecting the deposition of a wide variety of materials, and is particularly adapted to the deposition of materials which are supplied to a surface to be coated dispersed in or associated with a current of air or other gas.

A principal purpose of the invention is the provision of methods and apparatus for the efficient and economical deposition of materials.

A further purpose of the invention is to provide methods and means whereby the loss of materials and unhealthful atmospheric conditions attendant on the deposition of finely divided materials may be avoided.

Another purpose of the invention is the provision of methods and means for the removal of static charges from coated materials, particularly in conjunction with coating process utilizing electrical methods of deposition or an electrical method of treating the coating material before, during or after deposition.

The invention is not limited to the deposition or coating of any particular type of material, but it is of special value in the deposition of poorly conducting materials to form coatings or impregnations upon a base material. It may be utilized for example, in the deposition of fibrous particles upon an adhesive covered base to form a simulated pile surface, or it may be used in connection with the deposition of finely divided particles of wax on the surface of freshly printed paper or the like to prevent offsetting of the printed matter on adjacent sheets.

The invention includes the use of corona discharges to aid in the deposition of the materials and to prevent the escape of the materials into the surrounding atmosphere. This is effected by providing a curtain of corona discharge around the area within which the material being deposited is to be confined. In this manner the particles are given an electric charge which is utilized in confining the particles to the desired area and preventing the loss into the surrounding atmosphere. This is particularly desired in operations where the materials are borne to the area of deposition in a current of carrier gas, such as air, as the air flowing away from the area tends to carry away relatively large amounts of the material. This may be wholly or largely prevented by means of the invention.

In this and other methods of depositing involving the use of electrical charges the base upon which the materials are deposited tends to accumulate an electrical charge which is usually disadvantageous in the subsequent handling and treatment of the material and may cause a definite hazard. The invention includes the use of corona discharges to remove such accumulated charges, thereby eliminating hazards and difficulties in handling the material.

The provision of a curtain of discharge about an area to be coated, for example, may advantageously be effected by providing attenuated discharge elements about the member supplying the gaseous current utilized to carry the coating material. These discharge elements, which may consist for example, of a plurality of points or of one or more wires or edged members, are so positioned with respect to an electrode member of extended surface that upon impressing a high potential voltage across the space between the discharge elements and the extended electrode member a curtain of corona discharge emanates from the discharge elements in the direction of the extended electrode. By suitably positioning the elements the curtain of corona can be caused to substantially surround or "fence off" any desired area. It is desirable to impress a unidirectional potential between the electrodes and particularly advantageous results are obtained by the use of a pulsating current characterized by a series of unidirectional impulses of steep wave front. This type of current supply has the advantages over alternating or oscillating impulses and over ordinary unidirectional pulsating current having sine wave characteristics, that it permits the use of higher voltages without causing arc-over, often to the extent of 150% to 200%. The corona discharges produced by this type of current supply have a much greater ionizing effect on the air or other gas, thereby increasing the effectiveness of the curtain. A further advantage of this type of current is that the corona discharge is formed in a substantially continuous line along the wire or discharge edge instead of in spaced tufts of discharge such as are produced by ordinary forms of current supply.

For the same reasons the steep wave front impulses have been found to be particularly advantageous for the energization of the charge eliminating means.

For the purpose of illustrating the invention it will be further described with reference to the accompanying drawings in which:

Fig. 1 is a diagrammatic showing of apparatus embodying the principles of the invention;

Fig. 2 is a diagrammatic showing of a modified embodiment of the invention;

Fig. 3 is a detail fragmentary view in partial section of a supply nozzle constructed in accordance with the principles of the invention; and

Figs. 4 and 5 are plan views of modified forms of supply members constructed in accordance with the principles of the invention.

The apparatus illustrated in Fig. 1, is adapted, for example, to the production of pile surfaced materials by the deposition of fibrous particles, such as rayon flock, on a suitable base, and its operation will be described with reference to the production of such materials.

A base material 1, for example, a web of textile fabric or of paper, is passed, preferably in continuous manner, through the apparatus in the direction of the arrow. An adhesive is supplied to the upper surface of the base by means of coating device 2. The adhesive is not necessary when depositing particles which have adhesive qualities.

The base material then passed through an electric field established between electrodes 3, 4 forming a supply nozzle, and opposing plate electrode 5. The electrodes are energized by means of a circuit including transformer 6, rectifier 7, resistance 8, condenser 9, and spark gap 10. This circuit provides impulses of steep wave front. By closing switch 11 ordinary high voltage unidirectional pulsating current is provided.

Finely divided material, such as rayon flock, is supplied through duct 12 of the nozzle 3 by means of a carrier current of air. The material enters the zone of deposition between the opposing electrodes and is deposited on base 1 both by impact and by electrical deposition. The attenuated electrode members 4 provide a curtain of corona discharge surrounding the zone of deposition which effectively prevents the current of air from carrying undeposited material out of the zone of deposition.

The electrical charge carried by the deposited particles to the base material is removed by passing the base through a further electric field wherein the material is subjected to the action of a corona discharge of opposite polarity to the first field. The second field is established between attenuated electrode 13 and opposed plate electrode 14, although electrodes of other forms such as opposed point or edge electrodes may be used. The electrodes are energized with sharp wave front impulses by means of a circuit including transformer 6, rectifier 7, resistance 8', condenser 9' and spark gap 10'. The spark gap may be eliminated from the circuit by closing switch 11' thereby providing ordinary rectified high potential current.

In the form of apparatus shown in Fig. 2, which is particularly suitable for depositing self-adhesive materials such as wax, the web of base material 21 is passed through the apparatus in the direction of the arrow, first passing through an electrical field established between nozzle 22 carrying attenuated electrodes 23 and opposing plate electrode 24. A stream of air, preferably heated, is supplied to the nozzle through duct 25, and wax is fed to the stream of air by means of feeding drum 26 and feed trough 27.

Unidirectional high potential impulses of sharp wave front are supplied to the electrodes by means of a circuit including transformer 28, rectifier 29, resistance 30, condenser 31 and spark gap 32. The spark gap may be eliminated from the circuit by closing switch 33.

The wax particles are caused to deposit on the web and are prevented from leaving the zone of deposition with the current of air passing off laterally by means of the curtain of corona discharge set up between attenuated electrodes 23 and plate electrode 24.

The accumulated charge on the web is removed by subjecting it to corona discharge of opposite polarity between electrodes 34 and 35, which are adjustably mounted in insulating supports 36. The supply circuit includes transformer 28, rectifier 29, resistance 30', condenser 31' spark gap 32' and switch 33'.

In the apparatus of Figs. 1 and 2, the current supply to both the deposition zone electrodes and the charge removing electrodes can be supplied from a single condenser-spark gap set but flexibility of operation is gained by the arrangement illustrated.

Fig. 3 shows in detail a feeding nozzle which is particularly suitable for the deposition of fibrous materials, such as flock fibers. The lower end 42 of the nozzle 41 is expanded and rounded back so as to avoid the formation of corona discharge immediately adjacent the flock fibers which are fed through supply duct 43. The curtain of corona discharge is formed from attenuated wire discharge electrode 44 which is suspended from the nozzle by means of adjustable collar 45.

Figs. 4 and 5 show nozzle arrangements provided with a plurality of nozzles which may be positioned in the apparatus, for example, so as to extend across a wide web of base material.

In Fig. 4 nozzles 48 are surrounded by edge discharge elements 49 which may be formed of wire or of strips of metal.

In Fig. 5 nozzles 51 are surrounded by point discharge elements 52.

In both cases the discharge elements form a curtain of corona discharge which fences in the material issuing from the nozzle and effectively prevents it from being carried away from the zone of deposition.

I claim:

1. In the deposition of particles of material upon a base by means of a carrier gas stream, the improvement which comprises surrounding the zone of deposition with corona discharge.

2. In the deposition of particles of material upon a base by means of a carrier gas stream, the improvement which comprises surrounding the zone of deposition with corona discharge generated by high potential impulses of steep wave front.

3. In the deposition of particles of material upon a base by means of a carrier gas stream, the improvement which comprises surrounding the zone of deposition with corona discharge and thereafter removing accumulated electrical charges from the material by subjecting it to the action of a second corona discharge of opposite polarity.

4. A method of depositing material on a base which comprises dispersing the material in a stream of gas, bringing the material to the base in said stream of gas, surrounding the stream of gas at the zone of deposition with a curtain of corona discharge and thereafter removing accumulated electrical charges from the material by subjecting it to the action of a second corona discharge of opposite polarity.

5. A method of depositing material on a base

which comprises passing the base through a high potential electric field, bringing the material to be deposited into said field and surrounding the zone of deposition with a curtain of corona discharge.

6. A method of depositing material on a base which comprises passing the base through a high potential electric field, bringing the material to be deposited into said field, and surrounding the zone of deposition with a curtain of corona discharge generated by high potential impulses of steep wave front.

7. A method of depositing material on a base which comprises passing the base through a high potential electric field, bringing the material to be deposited into said field, surrounding the zone of deposition with a curtain of corona discharge and thereafter removing accumulated eletcrical charges from the material by subjecting it to the action of a second corona discharge of opposite polarity.

8. A method of removing electrical charges from a web of material which comprises subjecting it to the action of a corona discharge generated by unidirectional high potential impulses of steep wave front.

9. Apparatus for depositing particles of material upon a surface comprising a conduit for supplying the material adjacent the surface, attenuated electrodes positioned adjacent the mouth of said conduit, an extended surface electrode opposed to said attenuated electrodes, and means for impressing high potential across said electrodes sufficient to produce corona discharge from said attenuated electrodes.

10. Apparatus for depositing particles of material upon a surface comprising a conduit for supplying the material adjacent the surface, attenuated electrodes positioned adjacent the mouth of said conduit, an extended surface electrode opposed to said attenuated electrodes, and means for impressing pulsating high potential across said electrodes sufficient to produce corona discharge from said attenuated electrodes.

11. Apparatus for depositing particles of material upon a surface comprising a conduit for supplying the material adjacent the surface, attenuated electrodes positioned adjacent the mouth of said conduit, an extended surface electrode opposed to said attenuated electrodes, and an electrical circuit including a source of high potential alternating current, a rectifying device, a capacitance, and a spark gap for impressing pulsating high potential impulses of steep wave front across said electrodes sufficient to produce corona discharge from said attenuated electrodes.

12. Apparatus for depositing particles of material upon a surface comprising a conduit for supplying the material adjacent the surface, attenuated electrodes surrounding the mouth of said conduit, an extended surface electrode opposed to said attenuated electrodes, and means for impressing high potential across said electrodes sufficient to produce corona discharge from said attenuated electrodes.

13. Apparatus for depositing finely divided material on a web comprising attenuated electrodes, an extended surface electrode spaced therefrom, means for passing the web between said electrodes adjacent the extended surface electrode, means for impressing a high potential across said electrodes to establish a curtain of corona discharge extending toward said extended surface electrode and means for supplying a stream of gas carrying finely divided material within said curtain of corona discharge.

14. Apparatus for depositing finely divided material on a web comprising attenuated electrodes, an extended surface electrode spaced therefrom, means for passing the web between said electrodes adjacent the extended surface electrode, means for impressing high potential impulses of steep wave front across said electrodes to establish a curtain of corona discharge extending toward said extended surface electrode and means for supplying a stream of gas carrying finely divided material within said curtain of corona discharge.

15. Apparatus for depositing finely divided material on a web comprising attenuated electrodes, an extended surface electrode spaced therefrom, means for passing the web between said electrodes adjacent the extended surface electrode, means for impressing a high potential across said electrodes to establish a curtain of corona discharge extending toward said extended surface electrode and defining an area of deposition on said web, and means for supplying a stream of gas carrying finely divided material within said curtain of corona discharge.

16. Apparatus for depositing finely divided material on a web comprising attenuated electrodes, an extended surface electrode spaced therefrom, means for passing the web between said electrodes adjacent the extended surface electrode, means for impressing a high potential across said electrodes to establish a curtain of corona discharge extending toward said extended surface electrode, means for supplying a stream of gas carrying finely divided material within said curtain of corona dscharge and means for subjecting said web to a further corona discharge of opposite polarity.

17. Apparatus for depositing finely divided material on a web comprising attenuated electrodes, an extended surface electrode spaced therefrom, means for passing the web between said electrodes adjacent the extended surface electrode, means for impressing a high potential across said electrodes to establish a curtain of corona discharge extending toward said extended surface electrode, means for supplying a stream of gas carrying finely divided material within said curtain of corona discharge and means for removing electrical charges from said web comprising opposed electrodes at least one of which is shaped to emit corona discharge and means for supplying a high potential to said electrodes.

18. Apparatus for removing electric charges from a web of material which comprises opposed electrodes at least one of said electrodes being of attenuated shape, a source of high potential alternating current, circuit elements connecting said source with said electrodes including a rectifying device, a capacitance, and a spark gap for impressing unidirectional high potential impulses of steep wave front across said electrodes sufficient to produce corona discharge from said attenuated electrodes, and means for passing the web between said electrodes.

19. A method of removing electrical charges from a web of material which comprises subjecting it to the action of a substantially continuous line of corona discharge generated by unidirectional high potential impulses of steep wave front.

20. A method of forming a pile surface on a base material which comprises coating a surface of the base with an adhesive, passing the ad-

heavily coated base through a high potential electric field, bringing fibrous material into said field and depositing said fibrous material on the adhesively coated base while surrounding the zone of deposition with a curtain of corona discharge.

21. A method of forming a pile surface on an adhesively coated base material which comprises coating a surface of the base with an adhesive, establishing a high potential electrical field between an electrode and the adhesively coated base, bringing fibrous material into said field and depositing such fibrous material on the adhesively coated base while surrounding the zone of deposition with a curtain of corona discharge.

HARRY A. WINTERBUTR.

1095

July 1, 1941. H. P. RANSBURG ET AL 2,247,963

APPARATUS FOR SPRAY COATING ARTICLES

Filed June 29, 1939 2 Sheets-Sheet 1

FIG. 1

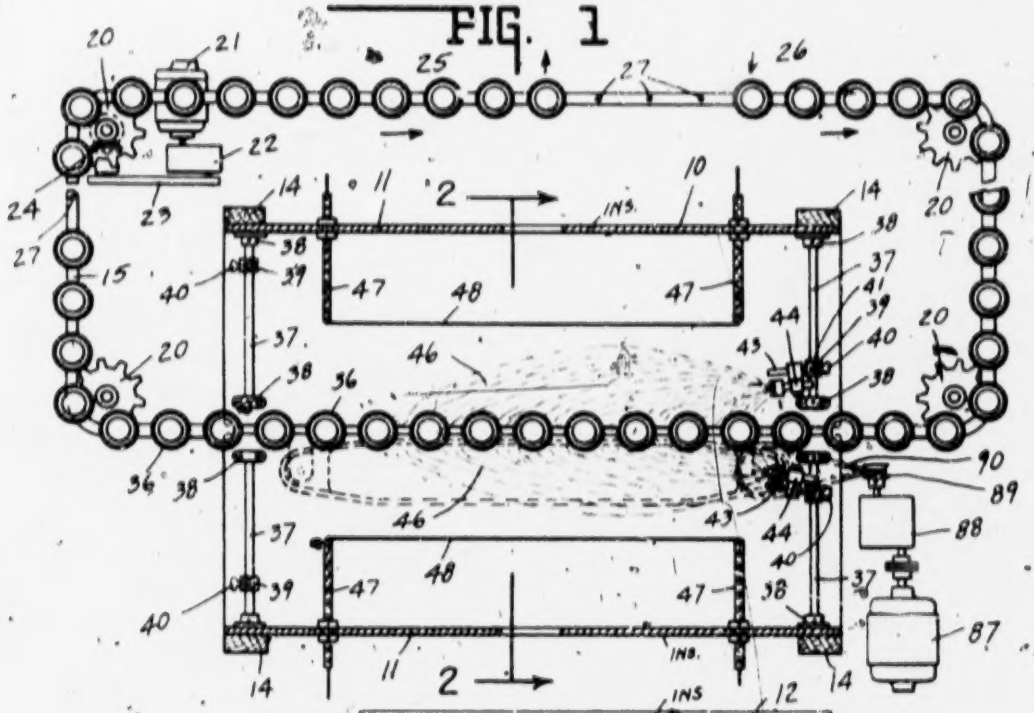

FIG. 2

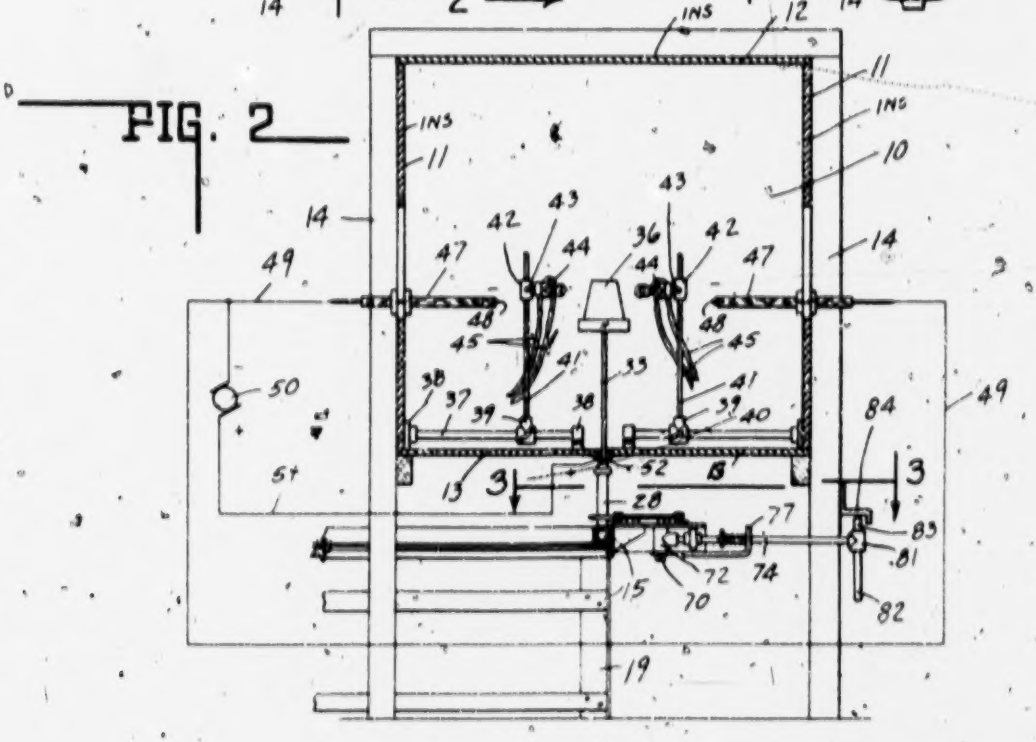

INVENTORS
HAROLD P. RANSBURG
HARRY J. GREEN.
BY Lockwood, Goldsmith & Galt
ATTORNEYS

1097

July 1, 1941. H. P. RANSBURG ET AL 2,247,963

APPARATUS FOR SPRAY COATING ARTICLES

Filed June 29, 1939 2 Sheets-Sheet 2

FIG. 3

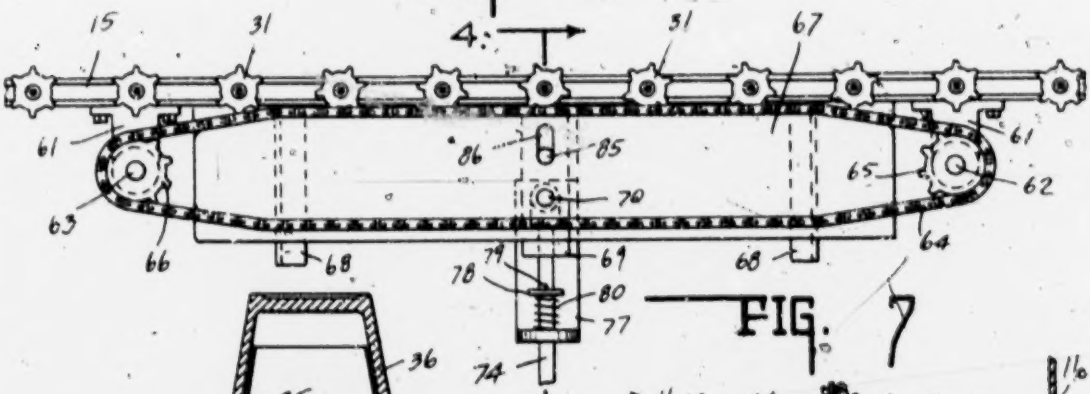

FIG. 7

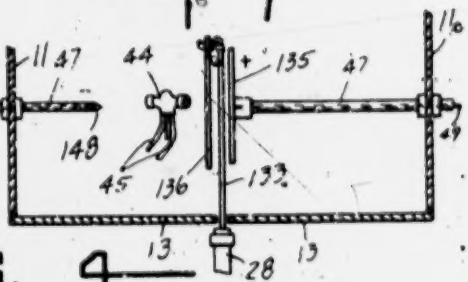

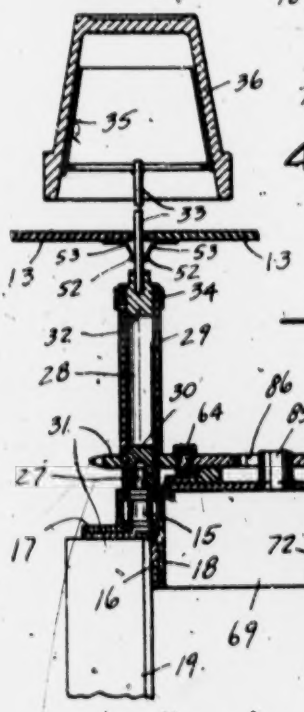

FIG. 4

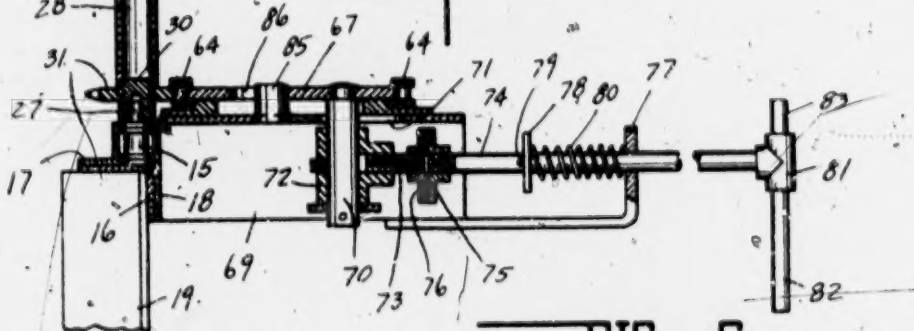

FIG. 5

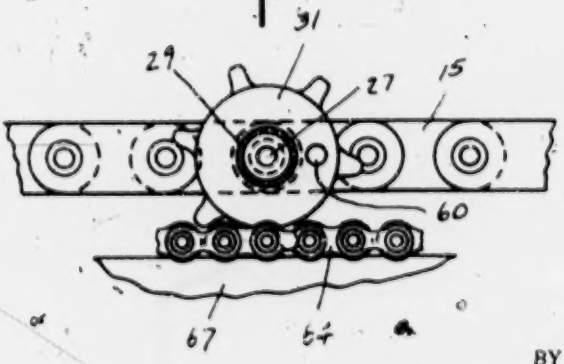

FIG. 6

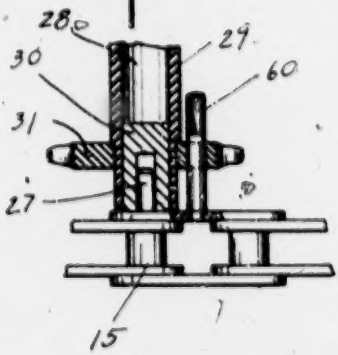

INVENTORS.
HAROLD P. RANSBURG.
HARRY J. GREEN.
BY
Lockwood, Goldsmith & Galt.
ATTORNEYS.

Patented July 1, 1941

2,247,963

1099

UNITED STATES PATENT OFFICE

2,247,963

APPARATUS FOR SPRAY COATING ARTICLES

Harold P. Ransburg and Harry J. Green, Indianapolis, Ind., assignors to Harper J. Ransburg, doing business as Harper J. Ransburg Company, Indianapolis, Ind.

Application June 29, 1939, Serial No. 281,766

5 Claims. (Cl. 91—45)

This invention relates to apparatus for spray coating articles in which the deposition of coating material is accomplished wholly or in part by electrostatic means. Certain features of the apparatus disclosed herein are disclosed and claimed in co-pending application of Harry J. Green, Serial No. 213,945, filed June 15, 1938, and methods of coating articles in which the present apparatus may be used are claimed in application Serial No. 308,024, divided from the present application and filed December 2, 1939.

In apparatus of this general type it has heretofore been the practice to provide a collecting electrode and a discharge electrode between which an electrostatic field is set up. Usually the article to be coated is the collecting electrode and the discharge electrode is in the form of a spray gun or other device used to direct a spray of coating material into the electrostatic field. In some cases the discharge electrode has been an object placed near the spray gun or in the path of the spray from the gun rather than the gun itself. The whole has been enclosed in a metal cabinet maintained at the potential of the discharge electrode. The theory of operation of such apparatus has been that the spray particles in touching or passing near a positively charged discharge electrode, for example, pick up initial positive charges which cause them to be attracted to the negatively charged collecting electrode and to be repelled from the positively charged walls of the cabinet.

We have found, however, that spray particles do not behave in the manner to be expected from the application of this theory. Even though the gun itself is the discharge electrode and all particles of the spray may then be expected to be electrically charged, still the spray particles apparently move toward a positively charged electrode as readily as toward a negative one, other things being equal. The walls of the cabinet, even when charged at the same potential as the gun, have substantially the same attractive effect as when charged at the opposite potential. In cases where the discharge electrode is placed in the path of the spray said electrode apparently acts as a collector of spray particles.

One object of the present invention is generally to increase the efficiency of spray coating methods and apparatus of the type described and particularly to reduce the amount of coating material lost by deposition on the walls of the cabinet and on the discharge electrode. This object is attained in part, first, by substituting a cabinet formed completely of insulating material for the metallic cabinet heretofore used; second, by placing the discharge electrode as completely as possible out of the path of the spray from the gun; and third, by suitably proportioning the sizes of the discharge and collecting electrodes.

The substitution of an insulated cabinet for a metallic one in any given installation materially reduces the amount of spray material collected thereon. In some installations the deposition of spray material on the cabinet has been practically eliminated whereas with a metal cabinet a heavy coating of such material quickly appeared on the cabinet. Apparently only such particles as receive an initial velocity and direction from the gun such that they cannot be deflected by the electrostatic attraction of the electrodes can reach the walls of the insulated cabinet, whereas, with a metal cabinet, a large number of such particles are actually attracted to the cabinet irrespective of the potential at which the cabinet is maintained.

The behavior of the particles indicates that it is unnecessary to give them an initial charge by contact or proximity to an electrode charged in the opposite potential to the collecting electrode. Apparently particles discharged into an electrostatic field are attracted to either electrode. Other things being equal, the attractive effect of a positively charged electrode is considerably greater than that of a negatively charged electrode but the attractive effect of any electrode increases immensely with an increase in the size of electrode. These facts have made it possible to increase the efficiency of the apparatus by placing the discharge electrode out of the path of spray particles and by making the discharge electrode relatively small and the collecting electrode relatively large. For the coating of small objects the discharge electrode may be in the form of a point, while for a succession of articles moving on a conveyor the discharge electrode is preferably in the form of a fine wire or a series of points arranged parallel to the direction of travel.

Another object of the invention is to provide efficient means for coating articles having a surface area too small to comprise an efficient collecting electrode. This object is attained by grouping a plurality of such articles in such way as to cause all members of the group to be presented simultaneously to the discharge electrode in such manner that their aggregate area is much greater than that of the discharge electrode.

Another object of the invention is to coordinate the velocity and direction of the spray with

the strength of the electric field and the position of the article to be coated in such manner that as little as possible of the spray fails to reach the articles. In the ordinary spray gun used for paint spraying, particles of varying sizes are created and these particles lose their initial velocities at various distances from the gun, depending upon their size. In prior practice in the painting of small articles particularly, many of the larger particles reach the region of the article to be coated with such a high velocity remaining that they cannot be pulled in by electrostatic attraction and are carried past the article. Small particles, on the other hand, lose their velocities before they can approach close enough to the articles to be attracted electrostatically. In the present invention, in one of its preferred forms, a series of articles to be coated is moved in a predetermined path adjacent to the spray gun. The gun is directed roughly parallel to the path or inclined at an acute angle to the path so that the articles successively pass close to the points at which the initial velocities of the particles of varying sizes are lost. Thus the particles of all sizes find themselves in the region of one of the articles at the time that their initial velocities have been sufficiently reduced to permit the same to be electrostatically attracted to the article. By this means a large percentage of the paint ordinarily lost because of the varying size and velocity of the spray particles actually reaches the articles.

Another object of the invention is to minimize the hazard of explosion in electrostatic spray painting with materials having inflammable solvents.

Another object of the invention is to provide an efficient method and apparatus for electrostatic spray painting of articles formed of non-conducting materials.

Other objects and features of the invention will be understood from the accompanying drawings and the following description and claims:

Fig. 1 is a plan view of a spray painting apparatus constructed in accordance with a preferred form of the invention and having the cabinet shown in section. Fig. 2 is a vertical sectional view taken on the line 2—2 of Fig. 1. Fig. 3 is a plan view of conveyor apparatus used with the invention and is taken substantially on the line 3—3 of Fig. 2. Fig. 4 is an elevational sectional view taken on the line 4—4 of Fig. 3. Fig. 5 is a plan view of a detail of the apparatus of Figs. 3 and 4. Fig. 6 is an elevational view of the same partly in section. Fig. 7 is an end elevational view showing an adaptation of the invention to the coating of a different type of object.

In the preferred form of the invention shown in the drawings there is provided a cabinet 10 consisting of side walls 11, top 12 and floor plates 13, all supported by vertical posts 14. The cabinet, including the vertical posts 14, is preferably constructed entirely of electrically non-conducting materials such as wood or Bakelite or other suitable plastics. Attention is called particularly to the use of non-conducting material for the supporting posts 14. Even though an insulated cabinet is used, if the supporting posts are of metal, an appreciable deposit of coating material is found on the inner wall of the cabinet in the region of the supporting posts. As will be apparent from the drawings, the cabinet is completely open to the atmosphere at both ends. It has been found that when the combined areas of the open ends of the cabinet measured in square feet is at least equal to one-third of the total volume of the cabinet measured in cubic feet, there is no danger of explosion with electrostatic deposition of paints or enamels using ordinary commercial solvents. If the area of the open ends is less than this figure, the interior of the cabinet approaches too closely to a confined space in which an explosive mixture may be accumulated. In the cabinet illustrated in the drawings, the ratio of end area to volume is approximately one square foot to three cubic feet.

Beneath the floor of the cabinet there is provided a conveyor chain 15 supported on a trackway formed by an angle iron 16, an angle iron 17 and a plate 18 (Fig. 4). Said trackway is suitably supported by legs 19. The conveyor chain is trained about sprockets 20 and may be continuously driven by a motor 21 operating one of said sprockets through a reduction gear unit 22, a belt drive 23 and beveled gears 24. The path of the conveyor chain is best seen in Fig. 1 and leads from beneath the cabinet past an unloading station 25 and a loading station 26 and then again beneath the cabinet. At suitable intervals along the conveyor chain there are provided upwardly extending pins 27 each adapted to enter a mating opening in the lower end of a carrier unit 28. Each of said carrier units, as best seen in Fig. 4, includes a sleeve 29 preferably formed of insulating material and having in its lower end a plug 30 provided with an opening to receive the pin 27. A sprocket 31 is mounted near the lower end of the sleeve 29. A plug 32 is secured in the upper end of the sleeve 29 and is provided with a recess adapted to receive an upwardly extending rod 33. A collar 34 tightly secured about the upper end of the sleeve 29 prevents undesired displacement of the plug 32. The rod 33 extends upwardly through an opening between the two bottom plates 13 of the cabinet and carries at its upper end an electrical terminal in the form of an electrode 35 herein shown as of frusto-conical shape formed of sheet metal and serving as a support for an article 36 to be coated. In the example shown herein the article is in the form of a flowerpot and may be of non-conducting material, such as ceramic ware.

At each end of the cabinet close to the floor there are mounted a pair of rods 37 suitably supported in fittings 38 and each having mounted thereon one or more slidable fittings 39. Said fittings 39 may be secured at any desired place along the rods 37 by means of thumb screws 40 and each of said fittings is adapted to receive a vertical rod 41. Fittings 42 are carried by the vertical rods 41 and are similar to the fittings 39. Said fittings 42 carry horizontal rods 43 adapted to support spray guns 44. Said spray guns may be of a well known commercial form and are connected by tubing 45 to a suitable source of a coating material such as paint, lacquer or enamel and a source of compressed air for atomization. By means of this construction the spray guns may be positioned as desired adjacent either end of the cabinet. In the arrangement shown in the drawings two such guns are used at one end of the cabinet and are located to direct a spray 46 of coating material in the general direction of the opposite end of the cabinet. One of said guns is positioned on each side of the path of movement of the articles 36 through the cabinet. Preferably all or a part of the sup-

porting structure for the guns is formed of insulating material and the tubing 45 is also of non-conducting material. The guns are, therefore, isolated from the electrical apparatus and do not impart any electrical charge to the spray particles nor tend to attract stray particles of the coating material.

On each of the side walls 11 of the cabinet there is mounted a pair of tubular insulating members 47 extending inwardly toward the path of travel of the articles 36. An electrode 48 in the form of a fine wire is strung between the inner ends of each of the insulators 47 and extends generally parallel to the path of travel of the articles. Each of said electrodes extends outwardly through one or both of the insulators 47 and is connected by a conductor 49 to one terminal of an electrical generating apparatus 50 shown diagrammatically in Fig. 2. The opposite terminal of said apparatus is connected by a conductor 51 to a pair of wires 52 (Fig. 4), which extend longitudinally beneath the floor of the cabinet and are supported on spring clips 53 carried by the cabinet floor. The wires 52 are adapted to engage the vertical rods 38 in their travel through the cabinet and thus serve to make an electrical connection between the generating apparatus 50 and each of the electrodes 35. Preferably the generating apparatus is adapted to supply direct current with a voltage of the order of 100,000 volts. The discharge electrodes 48 are preferably connected to the negative terminal and the collecting electrodes 35 to the positive terminal. By this means an electrostatic field of high intensity is set up between the discharge electrodes 48 and the collecting electrodes 35. Since the discharge electrodes 48 have an extremely small surface area as compared to the total surface area of the collecting electrodes 35 presented thereto, the last named electrodes exert a much more powerful attractive effect on the spray particles than do the electrodes 48. The tendency of the discharge electrodes 48 to collect spray particles is further diminished by the fact that they are located at the extreme edge of the normal path of the spray from the guns 44 or completely out of said path.

By means of the arrangement of the spray guns just described, the path of the spray and the path of the articles 36 is such that both small and large spray particles lose their initial velocities at points adjacent to the path of travel of the article. Thus there is always an electrically charged article reasonably close to exert an attractive effect on each slowly moving particle. The efficiency of the paint collection is, therefore, immensely increased over that of any arrangement in which the spray is directed substantially at right angles to the path of travel of the articles. The velocity of spray is normally adjusted so that none of the spray particles pass beyond the confines of the cabinet. It is immaterial in which end of the cabinet the spray guns are mounted. In fact, one may be mounted in one end and the other in the opposite end. Such an arrangement is beneficial in certain installations. Where only one side of each article is to be coated only one gun and one discharge electrode may be required. In other cases, such as for larger objects, more than one gun may be required on each side of the conveyor.

It is to be noted particularly that the articles to be coated need not be electrical conductors. When said articles are so placed as to mask the collecting electrode so that the electrostatic field must pass through the article, the efficiency of the collecting electrode is not materially impaired. Paint which is attracted by the collecting electrode is then deposited on the outer surface of the article. It is not necessary in all cases that the collecting electrodes be carried by the conveyor and act as supports for the articles. Where only one side of an article is to be coated it may be advantageous in some cases to mount a collecting electrode in a stationary position on the side of the conveyor opposite to the discharge electrode. Such an arrangement is illustrated in Fig. 7 in which an object 136 to be coated on one side only is in the form of a thin plate of non-conducting material. Said object is carried by a support 133 which may be mounted in the carrier 28 in the same manner as the rod 38 previously shown. The discharge electrode may be in the form of a metallic point 148 mounted on the end of one of the insulators 47. The collecting electrode is shown as a plate 135 carried on a similar support on the opposite side of the path of travel of the article 136. The spray gun 44 discharges the paint spray into the space between the discharge electrode and the object. In apparatus of this kind it is advantageous to move the conveyor intermittently, stopping each of the objects 136 between the electrodes for a sufficient length of time to receive a thorough coating of paint. In the claims the phrase "a terminal associated with said article" is intended to include an electrode such as those specifically illustrated for use with non-conducting articles or an electrically conducting element to which a conducting article which is itself the collecting electrode may be connected. Thus the member 35 of Fig. 4 may or may not serve as the collecting electrode, depending upon whether non-conducting or conducting articles are to be coated, but in either case it is a "terminal associated with the article."

For objects not placed too closely together on the conveyor, the electrical attraction is sufficient to give a relatively uniform coating on all sides of the articles, even though the articles are not turned during their movement while subjected to the spray. For articles of this type and for other articles where the spray is to be applied to one side only, there is provided a construction as shown in Fig. 6 of the drawings. Each of the sprockets 31 is provided with a suitable opening in which there is inserted a pin 60, the lower end of which is received in an opening in the adjacent link of the chain 15. The pin, therefore, prevents the articles from turning during their travel through the cabinet.

When the articles on the conveyor are spaced relatively close together it is desirable that they be slowly rotated in their movement through the cabinet to insure uniform coating. For this purpose mechanism shown particularly in Figs. 3 and 4 is provided. In this construction there is provided a pair of brackets 81 secured to the plate 18, one of which brackets serves as a bearing for a vertical stub shaft 82 and the other for a similar stub shaft 83. A sprocket chain 84 is trained about a pair of sprockets 85 and 86 carried by said stub shafts. The chain 84 is of the proper pitch to mesh with the sprockets 31 carried by the carrier units 28. A plate 87 rests on brackets 88 and a bracket 89 secured to the plate 18. The edges of said plate 87 engage the inner and outer runs of the chain 84 which is preferably a roller chain adapted to run

smoothly on said edges. By movement of the plate 67 toward or away from the conveyor 15 the chain 64 may be brought into and out of mesh with the sprockets 31.

The plate 67 has secured thereto a vertical pin 70 extending downwardly through a slotted opening 71 in the bracket 69 and having secured thereto a T-fitting 72. A stud 73 is threaded in the outlet of said T-fitting and is connected to a rod 74 by a pipe union 75. Said union is loosely adjusted so that the rod 74 may be rotated without rotating the stud 73 and the threaded connection 76 therein is soldered to prevent the union becoming unscrewed in its movement. The outer end of the rod 74 is guided in a bracket 77 secured to the bracket 69. A washer 78 is carried by the rod 74 and is held in place thereon by a pin 79. A compression spring 80 is interposed between said washer and the bracket 77 and normally urges the rod 74 and associated parts to the left in Fig. 4 to keep the chain 64 in engagement with sprockets 31. The yielding pressure of the spring permits the chain to give slightly if the teeth of the sprockets do not initially engage the chain at the proper point.

The outer end of the rod 74 is provided with a T-fitting 81, in one run of which there is secured a downwardly extending handle 82 and the other of which carries a stud 83. A detent 84 is secured to a portion of the cabinet in position to engage the stud 83. A guide pin 85 secured to the bracket 69 operates in a slotted opening 86 in the plate 67 and serves to guide the movement of the same. By means of this construction, the spring 80 normally presses the plate 67 against the inner run of the chain 64 and holds said chain in engagement with the sprockets 31. By means of the handle 82 the rod 74 may be rotated so that the stud 83 clears the detent 84, the rod may then be drawn to the right in Fig. 4 and the stud 83 returned to its vertical position outside of the detent 84. In this movement the plate 67 is moved to the right in Fig. 4 and disengages the chain 64 from the sprockets 31 and the detent 84 engages the stud 83 to retain the parts in this position.

A variable speed motor 87 is connected through a reduction gear unit 88, a pulley 89 and a belt 90 to a pulley mounted on the stub shaft 62 and thus serves to move the chain 64. When the motor 87 is run at the proper speed to operate the chain 64 at the same speed as the conveyor chain 15, no rotation of the articles on the conveyor is produced. By increasing the speed of the motor 87, rotation of the articles is effected in one direction, and by reducing the speed, the direction of rotation may be reversed. Any suitable speed of rotation of the articles may thus be produced by slight variations in the speed of motor 87. Of course when rotation of the articles is to be produced the pins 60 are withdrawn.

The foregoing specification describes the invention in one of its preferred forms. It is apparent however that variations in one or more of the elements of the invention are necessary for the coating of articles of different sizes and shapes. Articles of conducting material serve as their own collecting electrodes and do not require additional collecting electrodes of large size, such as shown herein. With the high voltages used in the method, certain articles not ordinarily classed as conductors actually possess sufficient conducting power to be efficient electrodes in themselves. For example, small panels of wood have been successfully painted without the use of additional electrodes. Some articles are of such shape that they cannot be efficiently sprayed with the spray guns located as shown herein. With such articles it may even be necessary to direct the spray at right angles to their path of travel. However, even with such an arrangement of the guns other features of the invention specified in the claims are applicable.

The invention claimed is:

1. In apparatus of the class described, conveyor means adapted to move a series of articles to be coated in a predetermined path, a series of receiving electrodes movable with said articles, each of said electrodes being associated with one of said articles, a discharge electrode spaced from the path of movement of said articles and positioned so that at least a portion of each of said articles intervenes between said discharge electrode and the associated receiving electrode, electrical means producing a high potential difference between said discharge electrode and said receiving electrodes, and means for spraying a coating material into the space between said articles and said discharge electrode, said potential difference being sufficient to attract the spray particles toward said receiving electrodes and thereby deposit the same on said articles.

2. In apparatus of the class described, a conveyor, a discharge electrode spaced therefrom, a series of electro-conductive support members carried by said conveyor and each adapted to support an article to be coated with at least a portion of said article intervening between said support members and said electrode, a source of electric potential having opposite terminals connected respectively to said support members and said electrode, and means for spraying a coating material into the space between said articles and said discharge electrode, said potential difference producing an electrostatic field effective to attract the spray particles toward said support members and thereby deposit the same on said articles.

3. In apparatus of the class described, a conveyor, a discharge electrode spaced therefrom, a series of electro-conductive support members carried by said conveyor and each adapted to support an article to be coated, each of said articles wholely masking its associated support member, a source of electric potential having opposite terminals connected respectively to said support members and said electrode, and means for spraying a coating material into the space between said articles and said discharge electrode, said potential difference producing an electrostatic field effective to attract the spray particles toward said support members and thereby deposit the same on said articles.

4. In combination, a conveyor carrying a plurality of spaced articles moving successively in a predetermined path, a terminal associated with said articles, a discharge electrode spaced from the path of travel of said articles, a source of high potential connected with said terminal and electrode respectively and creating in the atmosphere therebetween an electrostatic field, and a spray gun adapted to discharge a spray of coating material into said field, the axis of said spray being inclined at an acute angle to the direction of movement of the articles such that the initial velocities of particles of different sizes are lost adjacent to said path, and said electrode and

terminal being so placed that said electrostatic field includes substantially the whole of the path of said spray, whereby spray particles varying in size and velocity are collected on said articles by electrostatic action.

5. In combination, a conveyor carrying a plurality of spaced articles moving successively in a predetermined path, a discharge electrode in the form of a relatively fine wire arranged generally parallel to the path of said articles and spaced therefrom, a source of high potential connected with said terminal and electrode respectively and creating in the atmosphere therebetween an electrostatic field, a spray gun adapted to discharge a spray of coating material into said field, the axis of said spray being inclined at an acute angle to the direction of movement of said articles such that the initial velocities of particles of different sizes are lost adjacent said path, and said electrode and terminal being so placed that said electrostatic field includes substantially the whole of the path of said spray, whereby spray particles varying in size and velocity are collected on said articles by electrostatic action.

HAROLD P. RANSBURG.
HARRY J. GREEN.

1105

Jan. 20, 1942. H. P. RANSBURG 2,270,341

METHOD OF COATING GRANULAR MATERIALS

Filed Dec. 2, 1939 2 Sheets-Sheet 1

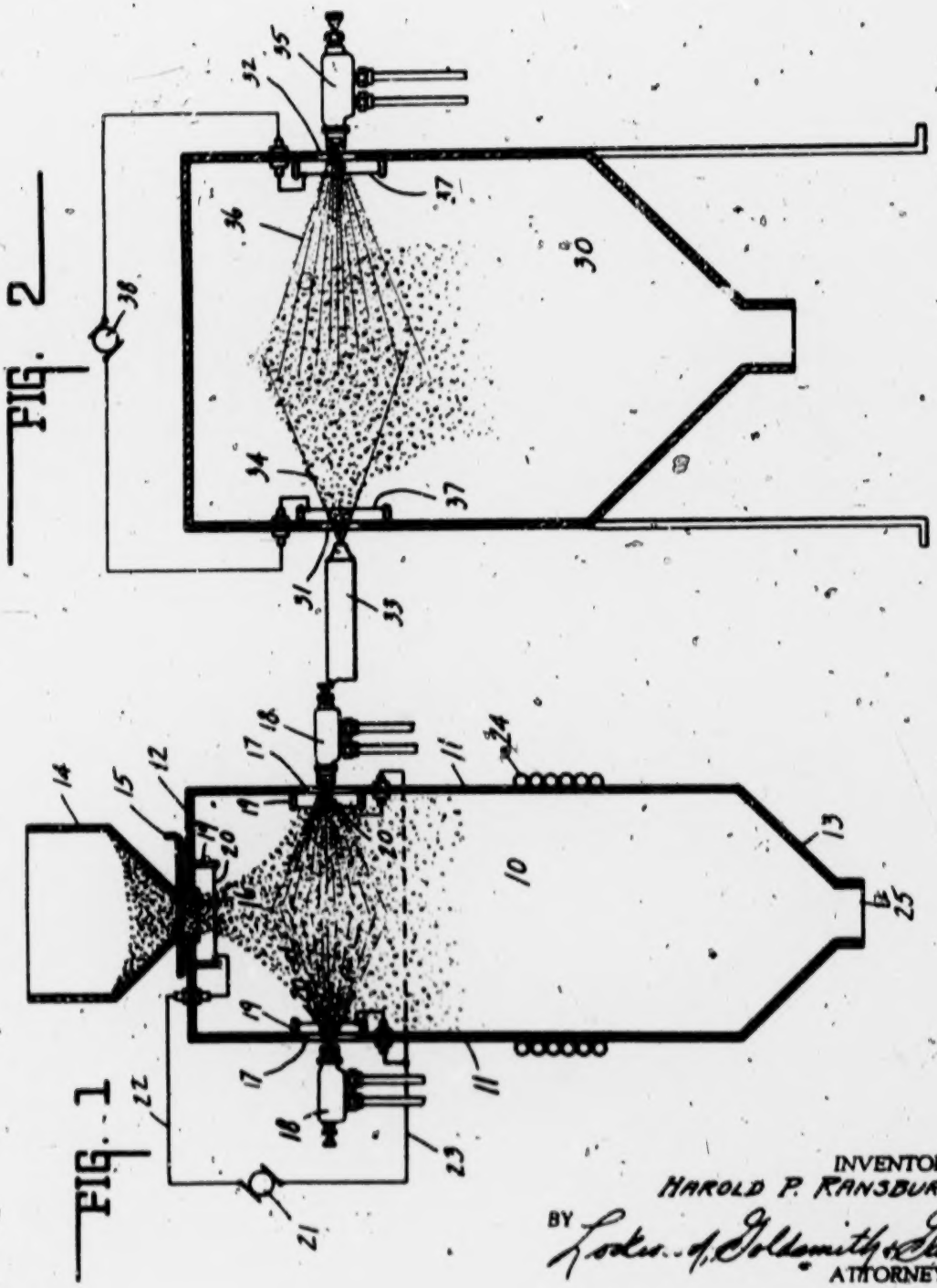

INVENTOR.
HAROLD P. RANSBURG.

BY Lockwood, Goldsmith & Galt.
ATTORNEYS.

1107

Jan. 20, 1942. H. P. RANSBURG 2,270,341

METHOD OF COATING GRANULAR MATERIALS

Filed Dec. 2, 1939 2 Sheets-Sheet 2

FIG. 4

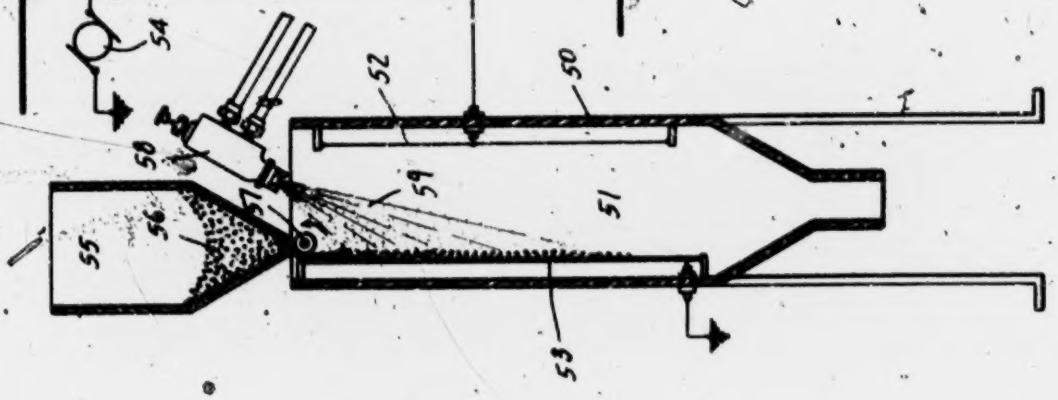

FIG. 5

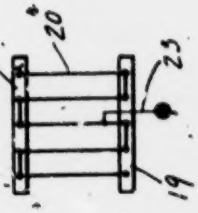

FIG. 6

FIG. 3

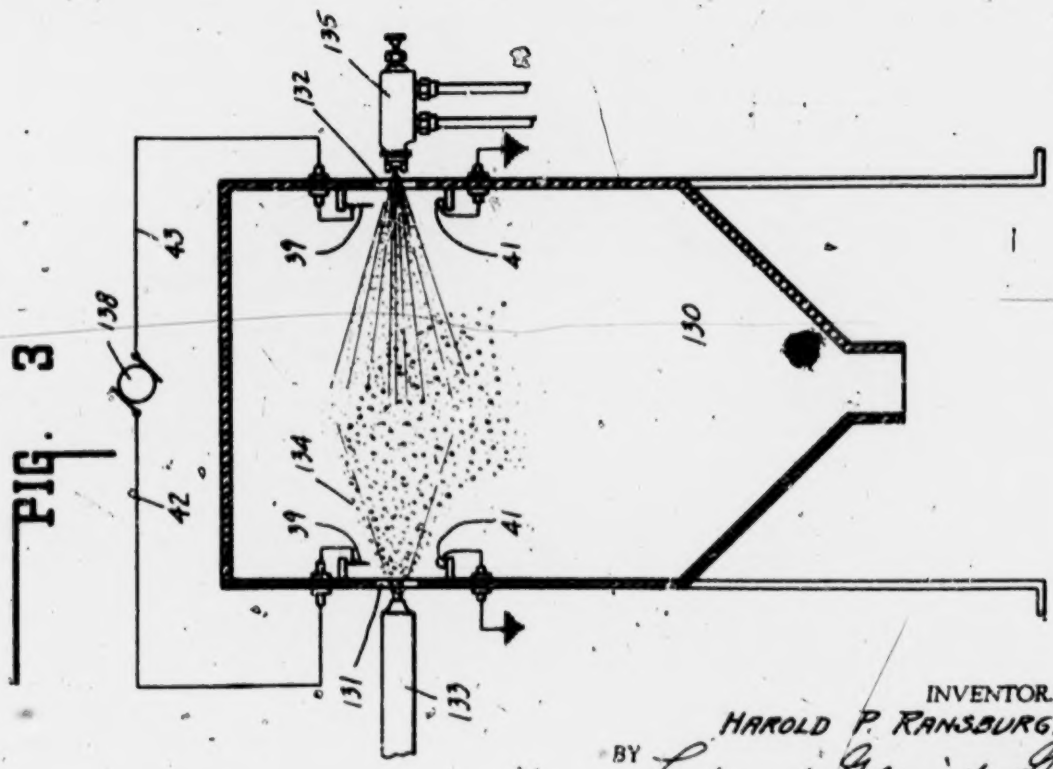

INVENTOR.
HAROLD P. RANSBURG.
BY Lockwood Goldsmith & Galt,
ATTORNEYS.

Patented Jan. 20, 1942

2,270,341

UNITED STATES PATENT OFFICE

2,270,341

METHOD OF COATING GRANULAR MATERIALS

Harold P. Ransburg, Indianapolis, Ind., assignor to Harper J. Ransburg, doing business as Harper J. Ransburg Company, Indianapolis, Ind.

Application December 2, 1939, Serial No. 307,312

4 Claims. (Cl. 91—68)

This invention relates to a method of coating granular materials. The method is particularly adapted to the coating of ground cork with adhesive material for the manufacture of molded cork articles such as the cork seals used in crown bottle caps. Another use of the invention is in the coating of ground cork or other similar material with paint or coloring matter in the manufacture of press board or insulating roofing material. Many other similar uses of the invention are possible.

In the past it has been the practice to coat such granular materials by mixing the same with the coating material in a pug mill or other form of apparatus by which they are mechanically mixed. This process is not entirely satisfactory for giving a thorough and uniform coating to all particles of the granular material unless excessively long periods are allowed in the pug mill. Even with a lengthy pugging operation there is a tendency for the smaller particles to accumulate in masses coated only on the outside, the individual particles within the mass having all or a large portion of their surface uncoated. The prior process, moreover, is restricted in use since some materials can not be handled at all in that manner.

One object of the present invention is to provide a simple and efficient method of coating granular materials of the type described which insures a thorough coating of the surface of all particles.

Another object of the invention is to provide a method for coating such materials with coatings which have not been possible by the prior methods.

In its simplest form the invention provides for intermingling dispersed streams of the granular material and coating material in an electrostatic field in such manner that the particles of the coating material are directed to the particles of granular material by electrostatic attraction. In one form of the invention the electrostatic attraction is produced by impressing static surface charges of opposite potential upon the particles of the two streams. In this form of the invention like charges impressed on the particles of granular material serve to scatter the particles by electrostatic repulsion and so facilitate access of the coating material to individual particles. This in itself is of great importance even when the coating material is not electrically charged. In another form of the invention a stream of the granular material is passed over the surface of an electrode which is used to attract electrostatically a spray of coating material toward the stream of granular material.

Preferably the two streams of material are intermingled in midair while unsupported, as distinguished from spraying coating material on a stream of material travelling on a conveyor. In this way the greatest dispersion of the granular particles is obtained and all parts of each particle are accessible to the coating material.

Other objects and features of the invention will be understood from the accompanying drawings and the following description and claims:

Figs. 1, 2, 3 and 4 are vertical sectional views partly diagrammatic of several forms of apparatus by means of which the method of the invention may be carried out. Fig. 5 is an elevational view of a portion of the apparatus shown in Fig. 1. Fig. 6 is a similar view of a portion of the apparatus shown in Fig. 3.

Referring now to Fig. 1, there is provided a chamber 10 having side walls 11, top 12 and hopper bottom 13. The walls, top and bottom of the chamber are preferably constructed of an electrically non-conducting material such as plywood, fibreboard or the like. A supply hopper 14 provided with a control gate 15 communicates with the chamber 10 by means of an inlet opening 16. The supply hopper 14 is adapted to contain a supply of material to be coated which may be fed into the chamber 10 through the opening 16 and the flow of which may be controlled by the gate 15. In the upper portion of each side of the chamber 10 there is provided an opening 17 through which a coating material, such as paint, glue, varnish or other similar substances, may be sprayed, as by pneumatic spray guns 18. The spray guns 18 may be of any conventional form well known in the art and suitable for the particular coating material to be supplied. For certain materials the rapid cooling effect of expanding compressed air associated with a pneumatic spray gun is detrimental. In such cases, a well-known type of centrifugal spray device may be provided instead.

Associated with each of the openings 17 and with the opening 16 there is provided a grid construction shown particularly in Fig. 5. Said construction consists of a pair of supports 19 mounted on the wall of the chamber and carrying an electrical conductor 20 which is repeatedly passed from one to the other of the supports 19 to form a grid between the strands of which the materials must pass in entering the chamber 10. A generator 21 adapted to supply direct current at a relatively high voltage may be located at any

convenient place adjacent the apparatus. This generator preferably supplies a potential of the order of 100,000 volts and several types well known in the art are available for the purpose. One terminal of the generator is connected by a conductor 22 to the grid 20 arranged beneath the opening 16. The opposite terminal of the generator is connected by a conductor 23 to both of the grids 20 associated with the coating material openings 17. By means of this construction a high potential electrostatic field is established within the chamber 10, the portion thereof adjacent the granular material supply opening 16 being charged with one potential and that adjacent the coating material openings 17 being charged in the opposite sense. Preferably the spacing of the grids and the voltage applied thereto is properly chosen so that a corona discharge takes place, since the voltages associated with such discharge are found to have the necessary effect in charging the atmosphere adjacent the grids and the particles of material passing through the grids.

In the operation of this form of the apparatus, the gate 15 is adjusted to permit a stream of the granular material to fall freely into the chamber 10. Even though the material is not such as would ordinarily be classed as a conductor of electricity still the particles thereof may pick up surface electric charges in passing through the grid 20 and the highly charged atmosphere surrounding the same. Since like charges are picked up by the particles, they tend to repel each other and the stream of material is thereby scattered. At the same time, the particles of coating material sprayed into the chamber 10 pick up electrical charges opposite to those on the particles of the granular material. The sprays of coating material are directed as best seen in Fig. 1 to converge upon the stream of granular material and since the latter stream has become dispersed by electrostatic repulsion of its particles, each particle has a much greater chance to receive its full complement of coating material than it would have if the stream were not so dispersed. The opposite electrical charges of the particles of granular material and coating material cause the same to be attracted toward each other and to neutralize each other. An intimate mixing of the two materials and a thorough coating of the granular particles is thus immediately produced.

In certain cases it is important that the coating on the particles be thoroughly dried before the particles are brought together in a mass. For such cases, heating coils 24 may be applied to the lower portion of the chamber 10 for maintaining a relatively high temperature therein. This temperature may be maintained in many cases sufficiently high to evaporate the solvent used in the coating material. The coated particles fall to the bottom of the chamber 10 and may be discharged through an opening 25 therein for such further steps in the process of manufacture as may be necessary.

Referring now to Fig. 2, there is shown therein a second form of apparatus for carrying out the invention. In that form a chamber 30 which may be of substantially similar construction to the chamber 10 is provided with side openings 31 and 32. Adjacent the opening 31 there is a pneumatic blow gun 33 by means of which a supply of granular material 34 may be blown into the chamber 30. Adjacent the opening 32 there is a spray gun 35 which may be similar to the guns 18 and which sprays a coating material 36 into the chamber 30. The stream of granular material and the stream of coating material are directed toward each other and collide in the center of the chamber. This in itself promotes intimate mixture of the two materials. However, an even more efficient mixing is produced by the provision of grids 37 similar to the grids 20 and arranged adjacent the openings 31 and 32. Said grids are electrically charged in opposite senses by a generator 38. The operation of apparatus of this form is similar to that of the apparatus shown in Fig. 1. The stream of incoming granular material is dispersed by electrostatic repulsion and the oppositely charged particles of the two streams are electrostatically attracted to each other in much the same manner as previously described.

Referring now to Fig. 3, there is shown therein a construction similar in many respects to that of Fig. 2 and in which parts numbered in the one hundred series have the same construction and function as correspondingly numbered parts in the unit series of Fig. 2. In this construction the grids 37 are not used and are replaced by a construction shown in detail in Fig. 6. In said construction a plurality of downwardly extending electrical conductors 39 are mounted on a support 40 and are electrically connected to each other. Beneath each of the openings 131 and 132 there is mounted a conductor 41 in opposed relation to the conductors 39. The conductors 39 associated with the granular material supply opening 131 are connected to one terminal of the generator 138 by a conductor 42 and the conductors 39 associated with the coating material supply are connected to the opposite terminal of the generator by a conductor 43. Both of the conductors 41 are grounded.

By means of this construction separate electrostatic fields are set up between each of the conductors 39 and its associated conductor 41. Since the gap between said conductors is much less than half of the gap between the grids 37 of Fig. 2 the voltage required to establish corona discharge is much less. In addition, the ends of the conductors 39 constitute discharge points which intensify corona discharge. The two fields, since they are connected to opposite terminals of the generator, charge the atmosphere in their immediate neighborhoods in opposite senses so that particles of the granular material entering the opening 131 are charged in opposite sense to particles of coating material entering the opening 132. The resulting interaction of the charged particles is similar to that previously described in connection with Figs. 1 and 2.

Referring now to Fig. 4, there is illustrated an apparatus suited for the coating of materials which are not so well adapted to the reception of electrostatic surface charges. In the use of this construction, less reliance is placed upon the electrostatic attraction between the particles of the two materials and additional means are provided for directing the spray of coating material upon the stream of granular material. In this form of apparatus there is provided a casing 50 of electrical non-conducting material defining a chamber 51. Adjacent opposite sides of the chamber 50 there are provided electrodes 52 and 53 connected to opposite terminals of a generator 54 adapted to supply high voltage direct current. The electrode 52 is preferably in the form of a vertical wire having very small surface area. Electrode 53 is a plate of conducting material having many times the surface area of the

electrode 52. Above the chamber 51 there is provided a storage hopper 55 adapted to contain a supply 56 of the granular material to be coated. Said material is supplied from a suitable opening in the bottom of the hopper 55 to a rotating gate roller 57 which is adapted to regulate by its speed of rotation the flow of material from the hopper. Said material is permitted to fall freely across the face of the electrode 53 and thus passes through the electrostatic field established between the electrodes 52 and 53. A spray gun 58 is mounted to supply a spray of coating material 59 into the upper part of the chamber 51 between the stream of granular material and the electrode 52. As discussed in more detail in co-pending application of Harold P. Ransburg and Harry J. Green, Serial No. 281,766, filed June 29, 1939, coating material sprayed into an electrostatic field is attracted to the electrode having the largest surface area in much greater degree than toward the electrode of small surface area. Thus the spray of coating material is attracted to the electrode 53 but is intercepted by the stream of granular material dispersed over the surface of the electrode and is intimately mixed therewith.

Several forms of apparatus by means of which the method of the invention as defined in the appended claims may be carried out have been described. Other forms will be apparent to those skilled in the art.

The invention claimed is:

1. A method of coating granular material comprising establishing an electrostatic field between two spaced points, introducing a stream of the material to be coated in the neighborhood of one of said points, introducing a stream of liquid coating material in the neighborhood of the second of said points whereby said streams are electrically charged in opposite sense, and directing said streams to convergence within said field whereby particles of one stream are attracted to particles of the other.

2. A method of coating granular material comprising establishing a corona electric discharge between a pair of oppositely charged electrodes, and introducing converging streams of said material and a coating material into the space between said electrodes, one of said streams passing sufficiently close to one of said electrodes to receive electrical charges therefrom and the other similarly receiving charges from the other of said electrodes, whereby particles of one stream are attracted to particles of the other.

3. A method of coating granular material comprising spraying said material and coating material into an electrostatic field said streams entering said field through oppositely charged portions thereof and converging within said field.

4. A method of coating granular material comprising establishing an electrostatic field of high potential between two electrodes one of which has a surface area many times greater than the other, passing a freely falling stream of said material between said electrodes and close to the larger electrode, and spraying coating material into the space between said stream and the smaller electrode, said coating material being electrostatically attracted toward said larger electrode and thereby mingling with the stream of material to be coated.

HAROLD P. RANSBURG.

1113

Oct. 3, 1944. C. K. GRAVLEY 2,359,476

ELECTROSTATIC METHOD AND APPARATUS

Filed Jan. 15, 1940 2 Sheets-Sheet 1

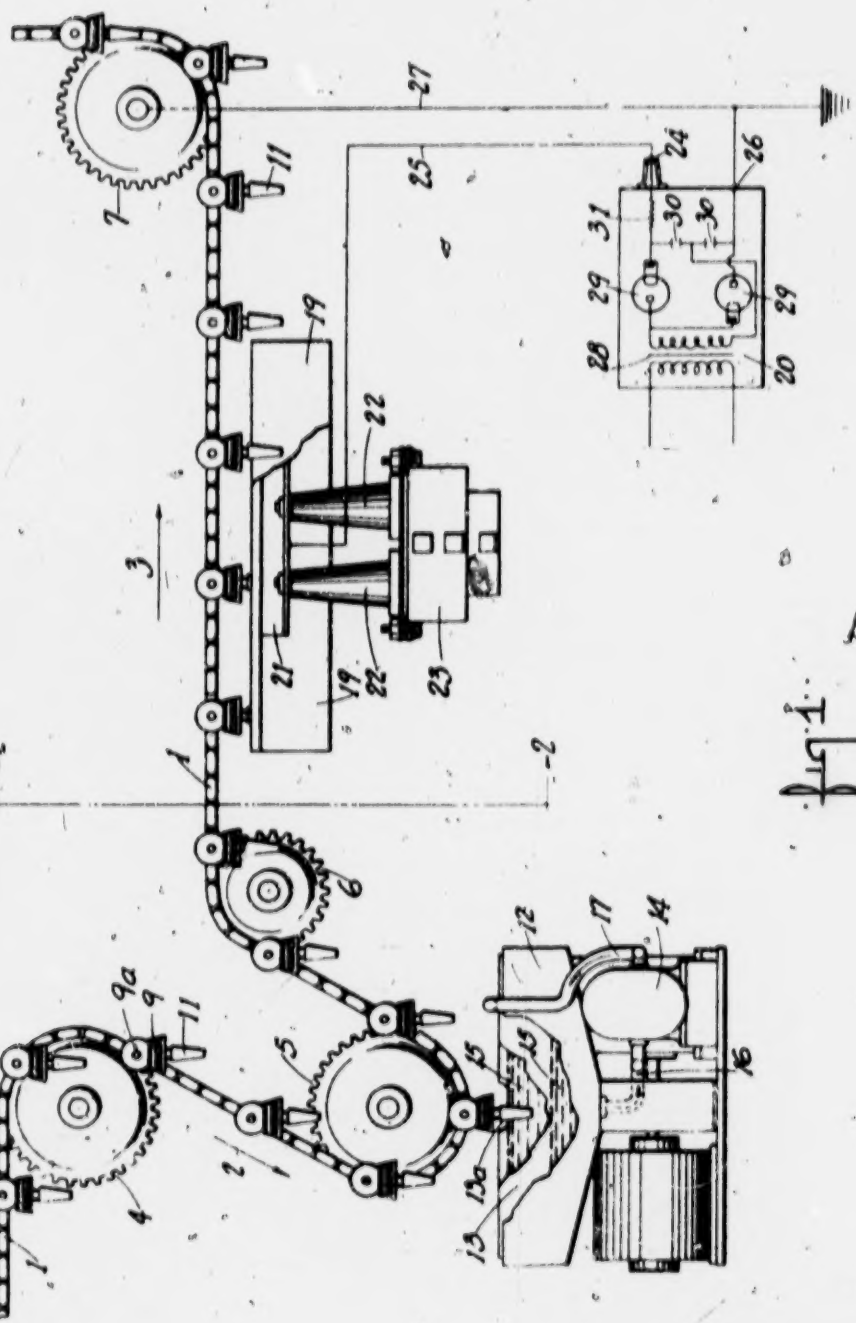

Fig. 1.

INVENTOR
CHARLES K. GRAVLEY.
BY G. G. Christensen
ATTORNEY

1115

Oct. 3, 1944. C. K. GRAVLEY 2,359,476

ELECTROSTATIC METHOD AND APPARATUS

Filed Jan. 15, 1940 2 Sheets-Sheet 2

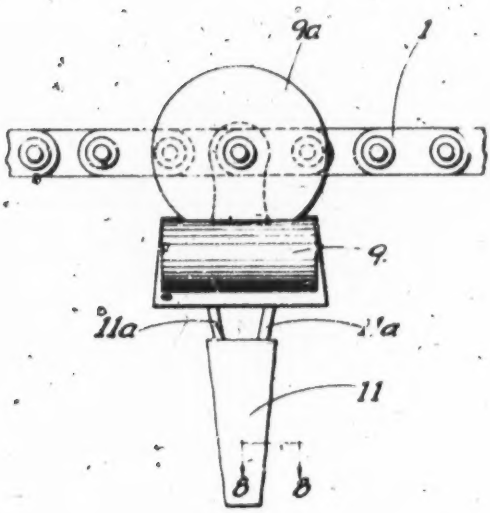

Fig. 3.

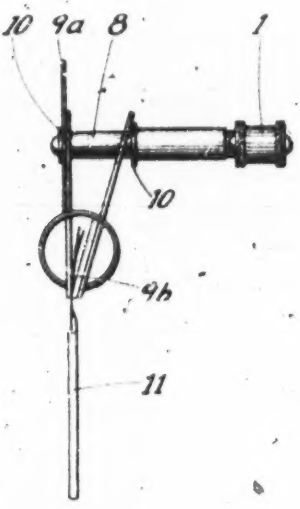

Fig. 4.

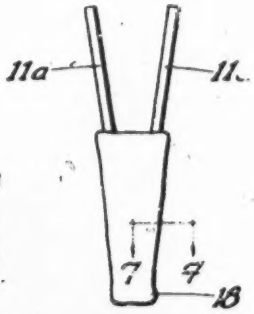

Fig. 5.

Fig. 6.

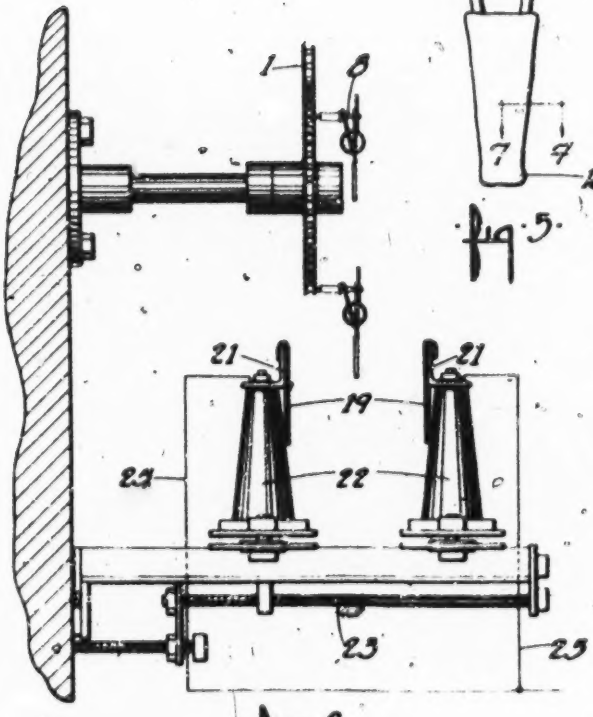

Fig. 2.

Fig. 7.

Fig. 8.

INVENTOR
CHARLES K. GRAVLEY
BY G. G. Christensen
ATTORNEY

Patented Oct. 3, 1944

2,359,476

1117

UNITED STATES PATENT OFFICE

2,359,476

ELECTROSTATIC METHOD AND APPARATUS

Charles K. Graviey, Cleveland, Ohio, assignor, by mesne assignments, to Harper J. Ransburg Company, Indianapolis, Ind., a copartnership consisting of Harper J. Ransburg, H. Gregg Ransburg, Harold P. Ransburg, and Edwin M. Ransburg

Application January 15, 1940, Serial No. 313,914

27 Claims. (Cl. 117—93)

This invention relates to a method and apparatus for coating articles with paint, varnish, lacquer or other coating materials.

An object of this invention is to provide an improved method for coating articles.

A more specific object is to provide a method for obtaining an improved distribution of coating material on the coated article.

A further object of this invention is to provide a method for removing the drop or drops of coating material that usually accumulate at the bottom of an article in the coating process.

Another object of this invention is to provide a method for obtaining a heavier coating at corners and edges of an article.

A further object is to provide apparatus for attaining the above objects.

The invention is applicable to the coating of articles of various kinds, sizes and shapes wherein the coating is applied in the liquid state and subsequently dries or sets. It has been developed in connection with the coating of piezoelectric units and will be described chiefly in connection with the coating of such units, but it should be understood that the invention is merely illustrated by this application, and is not restricted thereto.

Piezoelectric units, especially of the Rochelle salt type such as are used in microphones, phonograph pickups, etc., may be adversely affected by such atmospheric conditions as very high or very low humidity, high temperatures, etc., and for this reason are usually coated with a protective material such as lacquer or shellac. Two difficulties have been encountered in coating such units by the usual dipping or spraying methods. Firstly, part of the coating material tends to run to the lowermost part of the unit and collect there in a large drop. If this drop is not removed it subsequently hardens into a lump which is unsightly and may interfere with the mounting of the unit or the attachment thereto of a part such as a phonograph stylus holder. Such drops have heretofore been removed by a wiping process which could not be practiced effectively with automatic coating machinery. The second difficulty has been to obtain satisfactory coating thickness on sharp corners and edges. Most coating materials tend to favor flat surfaces by drawing away from the corners and edges. Consequently the coating material is thinnest at the locations which are most easily damaged.

I have discovered that the above difficulties can be greatly reduced and a desirable distribution of coating material obtained by subjecting the coated article to the influence of an electrostatic force while the coating material is in a wet state. For example, the article after being coated by spraying or dipping may be supported between metal electrodes, or above an electrode, or both. I usually prefer to use the article itself as one electrode and establish a difference of potential on the order of a few hundred to several thousand volts between the article and the adjacent electrodes. The resulting electrostatic force causes the excess coating material to leave the object and produces a more uniform distribution of the coating material which remains. The excess material may be removed in one or two large drops or in a large number of fine drops or even in a practically atomized state, depending on the nature of the material and the voltage used. In general, a higher voltage tends to remove the material in smaller drops or particles. It has been observed that the material leaves an article from sharp points such as the lowermost corners.

By thus using electrostatic force to remove the excess coating material it is possible to obtain a more uniform distribution of material than if gravity alone is relied on. I have also observed that the distribution of coating material which remains on the article is improved in another respect by the action of the electrostatic field, this improvement resulting from the tendency of the material to build up in thickness at sharp corners and edges. When the additional protection which is afforded by this increased thickness is desired, it may be secured by keeping the coated article under the influence of the electrostatic field until after the coating material has become set; that is, until after the material has reached that state or condition wherein it will henceforth hold its shape while drying. This provides additional protection at the regions most subject to damage.

When the coating material in a wet state is a reasonably good conductor of electricity and when the material is conductively connected to the source of high potential such as is the case when the coated article is of metal and connected to a high potential source, the source may be of either alternating or direct current. When the coating material is a very poor conductor, better results are obtained by the use of direct current. It appears that for poor conductors the conductivity between the electrode and the outer parts of the coating is so poor that said outer parts do not have time to become

charged to a sufficient potential before the cycle has reversed, whereas with the direct current there is no reversal of the potential and therefore considerable time may be allowed for a suitable charge to reach the outer portions. In the interest of safety for the operator, it is usually desirable to use a direct current source although this requires somewhat more elaborate equipment. The reason for this is that when a direct current source is used a very large protective resistance may be built into the power supply, which resistance makes it impossible for a fatal amount of current to flow through a person's body if he should accidentally come in contact with the electrodes. On the other hand, if alternating current is used, the alternating current necessary to charge the electrodes may in some cases cause so great a voltage drop in the series protective resistance that sufficient potential may not be obtained at the electrodes.

To further explain the invention I will now describe a practical form of automatic apparatus suitable for carrying out the new method in connection with the coating of small objects such as piezoelectric units.

Referring to the drawings,

Fig. 1 is a front elevation of a portion of a conveyor system and associated apparatus suitable for use with my improved method.

Fig. 2 is a sectional view taken on line 2, 2 of Fig. 1.

Fig. 3 is a front elevation of a portion of the conveyor holding a piezoelectric unit which has been coated by my new method.

Fig. 4 is an end elevation of the part shown in Fig. 3.

Figs. 5 and 6 are front and side elevations respectively of a piezoelectric unit as it appears when coated without benefit of my improved method, or as it appears before being subjected to the influence of the high-voltage electrostatic force.

Fig. 7 is an enlarged fragmentary sectional view of a portion of the piezoelectric unit of Fig. 5 and taken on line 7, 7.

Fig. 8 is an enlarged fragmentary sectional view of a portion of the piezoelectric unit of Fig. 3 and taken on line 8, 8.

Referring to the figures, the conveyor comprises a roller chain 1 which is guided in the direction of arrows 2 and 3 by sprockets 4, 5, 6 and 7, and is kept in motion by a suitable motor and reduction gear not shown.

At intervals along its length the conveyor chain is provided with extended pins 8, 8 which carry spring clips 9, 9, each provided with an enlarged handle portion 9a and a rubber compression pad 9b. The clips are free to rotate on pins 8 and are held in place by collars 10, 10. The leads 11a, 11a of the piezoelectric units 11, 11, are clipped into the clips by an operator positioned somewhat to the left of sprockets 4 and 5.

Below sprocket 5 is located a double tank comprising reservoir 12 containing an inner level-controlling tank 13. A motor driven pump 14 pumps the liquid coating material 15 out of reservoir tank 12 through pipe 16 and into level-controlling tank 13 through pipe 17, so that tank 13 continuously overflows at 13a back into main tank 12, thus maintaining a constant level of liquid as determined by the lower edge of cut out 13a in tank 13.

As the conveyor progresses in the direction indicated by the arrows 2 and 3, each piezoelectric unit 11 is successively dipped in the tank and then withdrawn. As the units are withdrawn from the tank the excess coating material tends to accumulate at the lower portions of the units under the action of gravity as indicated at 18 in Figs. 5 and 6.

To prevent accumulation of excess coating material at the bottom of the units and to assist in coating the edges and corners, I provide electrodes 19, 19 and a source of high voltage 20 connected to the electrodes and to the conveyor. Electrodes 19 are removably supported by angle members 21, 21 which are carried by high voltage insulators 22, 22. A frame 23 supports the insulators and is constructed to permit adjustment of the height and spacing of the electrodes. The high potential terminal 24 of the power supply 20 is connected by conductors 25, 25 to angle members 21 which are in contact with the electrodes. The low potential terminal 26 of the power supply is connected to ground and to the conveyor system by conductor 27 and therefore is also connected to the conductive coating of the piezoelectric unit.

As the coated piezoelectric units 11 approach the electrodes 19 the electrostatic forces established by the high potential causes the excess coating material 18 to be drawn off to the electrodes usually in a fine stream or spray. The excess continues to be drawn off until the coating material which remains on the article has reached a condition where it no longer flows in response to the electrostatic force. The material is then in such condition that it will henceforth hold its shape without forming drips, and hence has become set. Figs. 3 and 4 show the element after the coating material has thus become set while subjected to the action of the high voltage. The high potential field also tends to force the coating material to edges and corners. This is illustrated by Figs. 7 and 8 which are enlarged sectional views of the elements of Figs. 5 and 3 respectively, showing in exaggerated detail the distribution of coating material at the edges of the unit before and after the treatment with the electrostatic field. It will be observed (Fig. 7) that prior to application of the high voltage field the coating material tends to pull away from the edges leaving a very thin coating in the region that should have the greatest protection. However, when the electrostatic force is applied the coating material is caused to build up at the edges, thus providing the desired additional thickness at those regions, as shown in exaggerated form in Fig. 8. The electrodes 19, 19 of course are long enough to permit the coating material to become set in this built-up condition before the units pass beyond their influence. The units are then carried back and forth by the conveyor through a drying chamber (not shown) to permit more thorough drying and then pass to successive dipping tanks and removing electrodes where additional coats are applied. After the last coating applied to the units has become dry, the units are removed from the clips by another operator and are ready for final test and use.

It has been found that a plurality of thin layers of coating material provides more satisfactory protection for piezoelectric units than a single thick layer. Heretofore it has been expensive to apply a plurality of coats because each coat has been applied by hand and the excess coating material wiped off after each coating step. My invention eliminates the necessity for handling the units individually each time a coating layer is applied, and thus permits the appli-

cation of a plurality of layers without additional cost. A further advantage of the use of a plurality of coats is that the different kinds of coating material may be used for the different layers. For example, it has been found that the vinyl chloride composition known to the trade as Korolac is an excellent moistureproofing material but does not adhere well to piezoelectric units. Black shellac has good adhering properties but is not as effective in protecting the units. By using shellac for the first two or three coats and then by using a coat or two of Korolac, very effective protection is obtained. Without the aid of my invention such a composite, built-up protective coating would be excessively expensive.

The voltage required for satisfactory operation of the invention depends on a number of factors of which the surface tension of the coating material and the spacing of the coated object from the electrodes are perhaps most important. In general, the greater the surface tension of the coating material, the greater the required voltage becomes. Also, the greater the spacing between the coated article and the electrodes, the greater the voltage required. For the electrode arrangement shown in Figs. 1 and 2, with the electrodes spaced about 2" from the coated article, a voltage in the order of 10,000 to 20,000 volts is desirable when thin black shellac is the coating material. The effect of this voltage may be markedly increased by adding materials like acetonyl acetone to the shellac for the purpose of reducing its surface tension.

Approximately the same results may be obtained with lower voltage and closer electrode spacing but the possibility of short circuits occurring due to swinging of the coated units over to an electrode becomes more serious. Voltages which produce a visible or audible discharge should be avoided.

It will be understood that many other arrangements of parts may be employed. For example, in lieu of the pair of vertical electrodes 19, 19, a single horizontal electrode may be placed beneath the conveyor. This arrangement provides for satisfactory removal of excess coating material but has the disadvantages, when used for coating piezoelectric units, that the effective electrode spacing depends on the length of the units being treated. Another arrangement is to use the tank of coating material as an electrode. With this arrangement, if the coating material is a conductor, the system is short circuited every time an article is dipped and it is necessary to arrange the spacing of the units on the conveyor so that a dipped unit is removed from the tank and subjected to the removal action of the high potential before the next unit enters the tank. This arrangement is hazardous when used with inflammable coating material, but the hazard may be avoided effectively by maintaining an inert atmosphere around the coating tank.

I prefer to use the coated article as one electrode of the system whenever this is possible because I have had best results with this arrangement. When it is desired to use a coated non-conducting article as one electrode, this may be accomplished, for example, by suspending the non-conducting article from a wire or hook which is connected to one side of the voltage source, the other side thereof being connected to an adjacent electrode. With this arrangement, a coating material should be used which is a conductor when in a wet state. The dipping step should then be conducted in such manner that the hook or wire contacts the coating material. The conductive coating on the article will then function as an electrode.

It should be understood that it is not essential that the coated article be connected to the high-voltage source, since it has been found that the coated article, whether a conductor or not, may be treated by merely introducing it in an electrostatic field which is maintained between two electrodes of opposite polarity.

The high voltage supply, 20, as shown comprises a step-up transformer, 28, two thermionic rectifiers, 29, 29, and condensers, 30, 30, connected in a voltage doubling circuit. Resistance, 31, in the order of 20 megohms is connected in series with the high potential side to limit short circuit currents to a safe value. This high resistance cooperates with the capacity of the electrodes and wiring to provide smoothing or filtering action.

Other types of high voltage supplies may, of course, be used. For example, the thermionic rectifiers may be replaced by mechanical rectifiers, or the complete supply, 20, may be replaced by an electrostatic generator. Furthermore, in many cases an alternating current supply may be used comprising simply a step-up transformer. Transformers intended for use with neon signs are comparatively inexpensive and are suitable for this use.

Since various changes may be made in the above construction and different applications of the invention could be made without departing from the scope thereof, it is intended that all matters contained in the above description or shown in the drawings shall be interpreted as illustrative and not in a limiting sense.

Having now explained my invention, what I claim is:

1. The method of treating an article which comprises the steps of coating said article with liquid coating material and thereafter allowing said liquid coating material to become set while under the influence of an electrostatic force.

2. The method of treating an article which comprises the steps of applying liquid coating material to said article, subjecting said coated article to the action of an electrostatic force while said coating material is in a liquid condition to remove the excess therefrom and to redistribute the liquid material which remains and maintaining said article under the influence of said force until the coating becomes set.

3. The method as claimed in claim 2 wherein the said liquid coating material is applied by dipping.

4. The method of increasing the thickness of coating on the edges of a coated article, which comprises the step of subjecting said coated article to an electrostatic force while the coating material is in a liquid condition, and maintaining the article under the influence of said force until the coating material has become set.

5. The method of removing excess liquid coating material from an article coated therewith and for increasing the thickness of coating on the edges of the article, said method comprising the steps of: subjecting the coated article to an electrostatic field while allowing the excess material on said article to drain by gravity to the bottom portions of the article; and maintaining the article in said field until the coating has become set.

6. The method of treating an article, which comprises the steps of: coating said article with

liquid coating material; subjecting the coated article to the action of an electrostatic force while the coating material is still liquid; and thereafter allowing said liquid coating material to become set while under the influence of said electrostatic force.

7. The method of removing liquid coating material from an article which is coated with an excess thereof, said method comprising the steps of: bringing the coated article into spaced relationship with respect to an electrode; establishing an electrostatic field between said article and electrode while said excess coating material is sufficiently liquid to drain by gravity to the bottom portions of the article; and maintaining said field until the coating material which remains on the article has become set.

8. The method of treating an article which comprises the steps of: coating said article with an excess of liquid coating material; causing the excess coating material to flow over the surface of the article and to accumulate on predetermined surface portions thereof; subjecting at least the said predetermined portions to the influence of an electrostatic field while the accumulations of coating material are still liquid; and maintaining the article under the influence of said field until no further accumulations of coating material appear adjacent said predetermined portions.

9. The method of treating an article, which comprises the steps of: coating said article with an excess of liquid coating material; causing the excess coating material to flow over the surface of the article and to accumulate on predetermined surface portions thereof; passing at least the said predetermined portions into an electrostatic field maintained between a pair of electrodes while the accumulations of coating material are still liquid; and maintaining said portions under the influence of said field until no further accumulations of coating material appear thereon.

10. A method of treating a piezoelectric unit, said method comprising the steps of: coating said unit with an excess of liquid shellac; subjecting the coated unit to the influence of an electrostatic field while the shellac is still liquid and until it has become set; drying said coating of shellac; thereafter coating said unit with an excess of liquid waterproofing vinyl resin; and resubjecting the unit to the influence of an electrostatic field while the resin is still liquid and until it has become set.

11. In the process of coating an article with liquid coating material, the method of preventing the accumulation of drops of excess coating material at the bottom portions of said article, which comprises subjecting at least said portions of the coated article to the influence of an electrostatic force while said coating material is in a liquid state and until it has become set.

12. Apparatus for treating an article having a coating of liquid coating material thereon, said apparatus comprising the combination of: means for establishing an electrostatic field capable of removing drops of excess coating material from said article, and means for subjecting said article to the action of said field while the coating material is still liquid and until it has become set.

13. Apparatus for coating an article with liquid coating material, said apparatus comprising: means for applying the liquid coating material to the article; an electrode; means for establishing an electrostatic field between said article and electrode; and means for disposing said article adjacent said electrode while said coating material thereon is in a liquid state and for maintaining it adjacent said electrode until the liquid coating material has become set.

14. Apparatus for coating an article, which comprises: a bath of liquid coating material; electrode means; conveyor means adapted to dip said article in said bath, then to transport said dipped article into predetermined spaced relationship with respect to said electrode means while the coating on said article is in a liquid condition, and then to maintain it in said spaced relationship with said electrode until the coating material has become set; and electrical means for establishing an electrostatic force between said coating and said electrode means capable of removing the excess liquid coating material which drains to the bottom portions of the article.

15. The method of making a coated article which comprises the steps of: dipping said article in liquid coating material, and then subjecting the dipped article to the action of an electrostatic force while the coating thereof is in a liquid state.

16. The method of removing a portion of a coating from an article comprising the steps of establishing a potential difference in a circuit, connecting one side of the circuit to the article to establish the article and the coating thereon at substantially the same potential, and connecting the other side of the circuit to terminal means spaced from the article to cause a portion of the coating to leave the article and move through the space toward the terminal means.

17. The method as claimed in claim 16 in which the article is maintained at substantially ground potential.

18. The method as claimed in claim 16 in which said established potential difference is maintained by a direct current source.

19. The method as claimed in claim 16 in which said coating is a liquid coating.

20. Apparatus for treating an article comprising in combination; means for coating said article with an excess of coating material, means for establishing a direct current potential difference, open electrical circuit means connected to said means for establishing said direct current potential difference, means for connecting one side of said circuit to said coated article to establish said article and said coating at substantially the same potential, and said open circuit including means spaced from said coated article and maintained at a potential different than the potential of the article and the coating thereon to cause the excess portion of said coating to leave the article and move through the space toward said spaced means, and current limiting impedance means located between said means for establishing the direct current potential difference and said means which are spaced from said coated article.

21. Apparatus for coating an article with liquid coating material, said apparatus comprising: means for applying the liquid coating material to the article; an electrode; means for establishing an electrostatic field between said article and electrode; and means for disposing said article adjacent said electrode while said coating material thereon is in a liquid state and for maintaining it adjacent said electrode.

22. Apparatus for coating an article, which comprises: a bath of liquid coating material;

electrode means; conveyor means adapted to dip said article in said bath, then to transport said dipped article into predetermined spaced relationship with respect to said electrode means while the coating on said article is in a liquid condition, and then to maintain it in said spaced relationship with said electrode; and electrical means for establishing an electrostatic force between said coating and said electrode means capable of removing the excess liquid coating material which drains to the bottom portions of the article.

23. The method of removing surplus coating material from a pre-coated article that comprises, imparting an electric charge to said surplus, and subjecting such charged surplus to an electric field of proper polarity and of sufficient strength to cause the said surplus to leave the article.

24. Apparatus for treating a coated article comprising, in combination, a high potential source, means for connecting one side of said high potential source to the coated article, electrode means spaced from said article, means connecting said electrode means to the other side of said high potential source to establish a steep potential gradient between said electrode means and said article whereby excess coating material is caused to leave said coated article.

25. Apparatus for treating a coated article comprising in combination, a plurality of spaced terminal means, means connected to at least one of the terminal means for establishing a high potential difference between said terminal means, and means for electrically connecting said coated article to one of said terminal means to subject the coating to the electrostatic force established by said potential difference to cause a portion of the coating to leave the article.

26. In an apparatus for treating a coated article; circuit means including a voltage source for establishing a potential difference in said circuit means, means for connecting one side of the voltage source to the article to establish the article and the coating thereon in the circuit and to establish the coating thereon at a certain potential, electrode means spaced from said coated article, and means for connecting the other side of the said voltage source to the said electrode means to establish the electrode means in the circuit and at a potential different from the potential of the coating to cause portions of the coating to leave the article.

27. Apparatus for treating a pre-coated article, comprising in combination a plurality of spaced apart electrodes, means for giving one of said electrodes a high potential with respect to another of said electrodes, and means for disposing a coated article effectively in the electric field between said electrodes and in [redacted] contact with one of said electrodes whereby excess coating material is expelled from said article.

CHARLES K. GRAVLEY.

1123

March 18, 1947. H. P. RANSBURG ET AL 2,417,798

APPARATUS FOR COATING ARTICLES

Filed June 25, 1943 3 Sheets-Sheet 1

FIG. 1

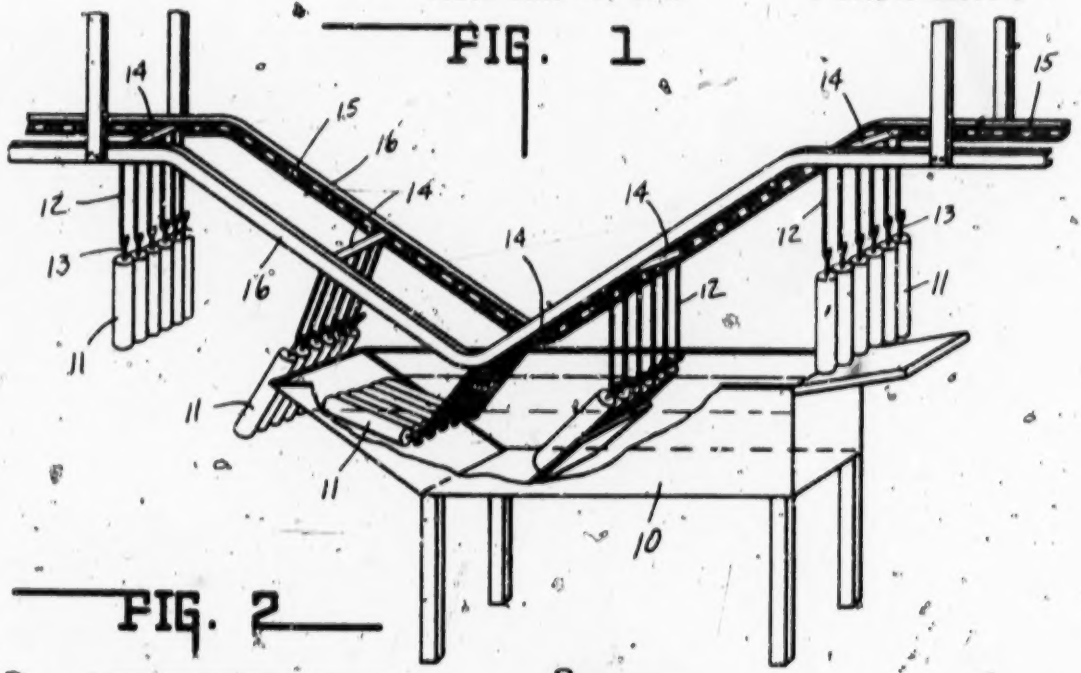

FIG. 2

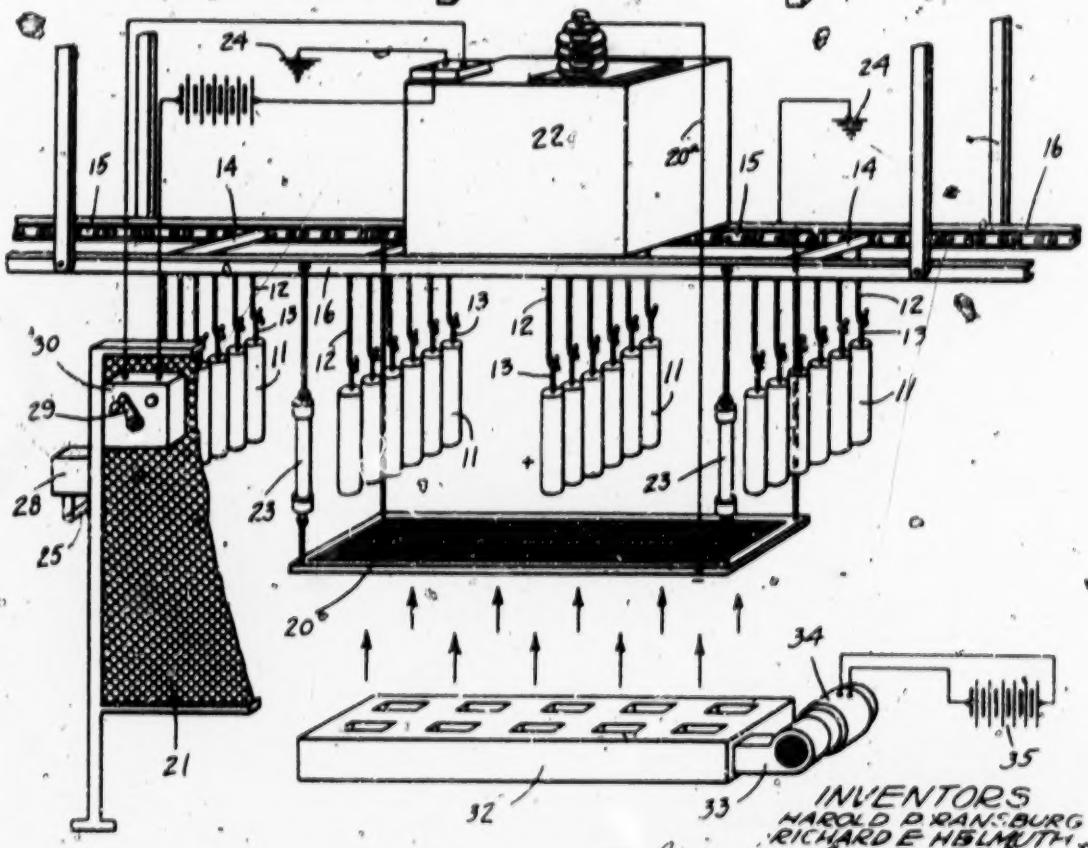

INVENTORS
HAROLD P. RANSBURG
RICHARD E. HELMUTH

BY Lockwood, Goldsmith & Galt
ATTORNEYS

1125

March 18, 1947. H. P. RANSBURG ET AL 2,417,798

APPARATUS FOR COATING ARTICLES

Filed June 25, 1943 3 Sheets-Sheet 2

FIG. 3

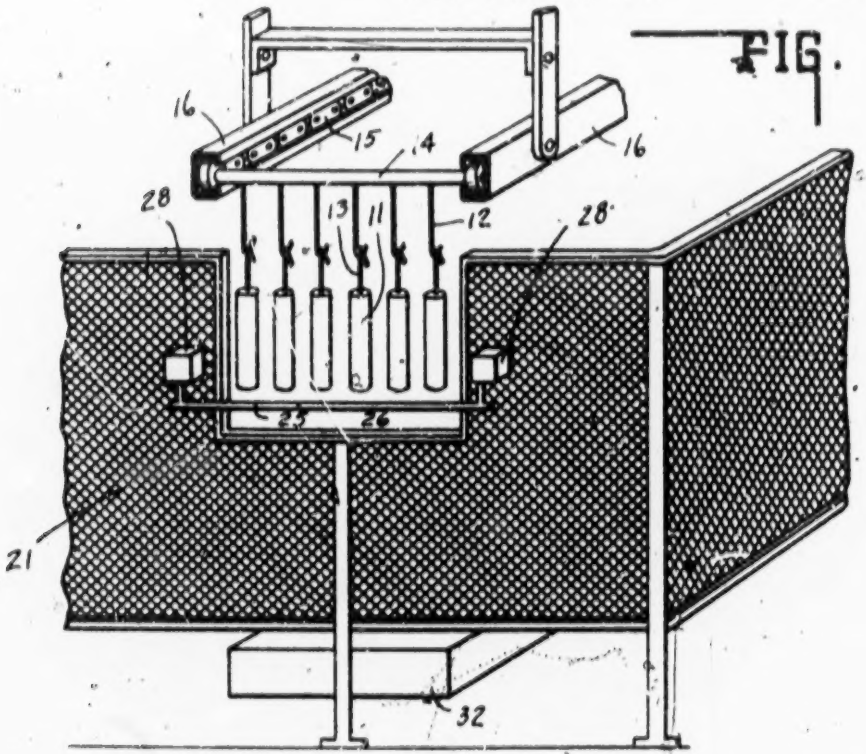

FIG. 4

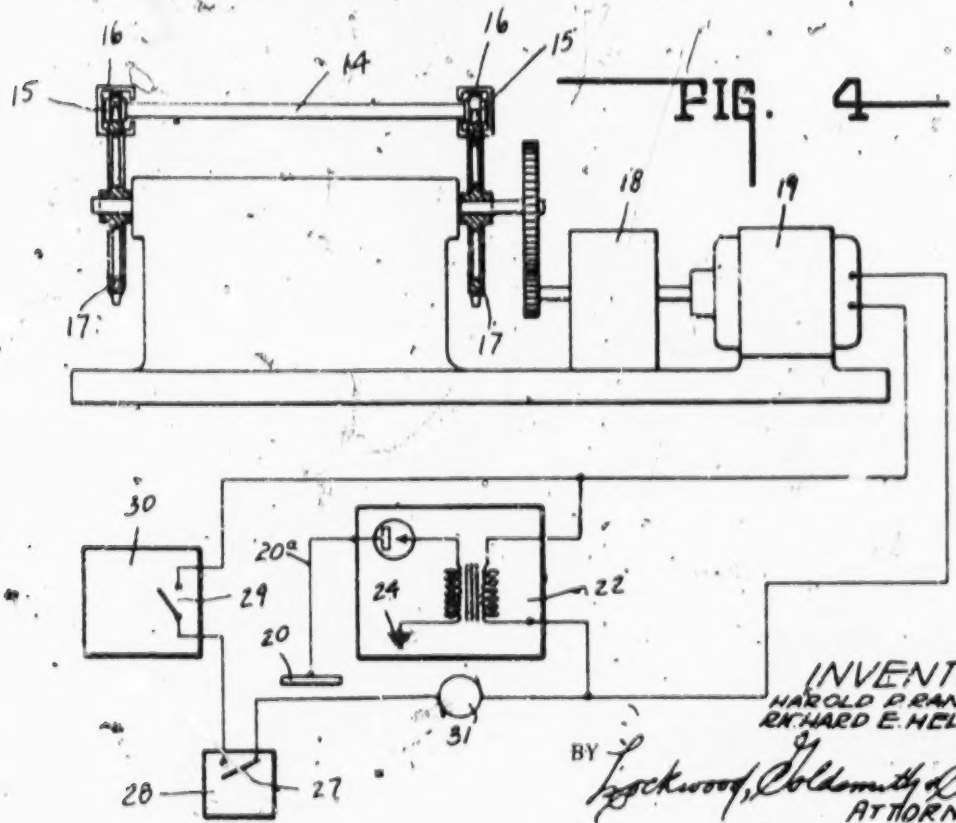

INVENTORS.
HAROLD P. RANSBURG.
RICHARD E. HELMUTH
BY Lockwood, Goldsmith & Galt,
ATTORNEYS.

1127

March 18, 1947. H. F. RANSBURG ET AL 2,417,798

APPARATUS FOR COATING ARTICLES

Filed June 25, 1943 3 Sheets-Sheet 3

FIG. 5

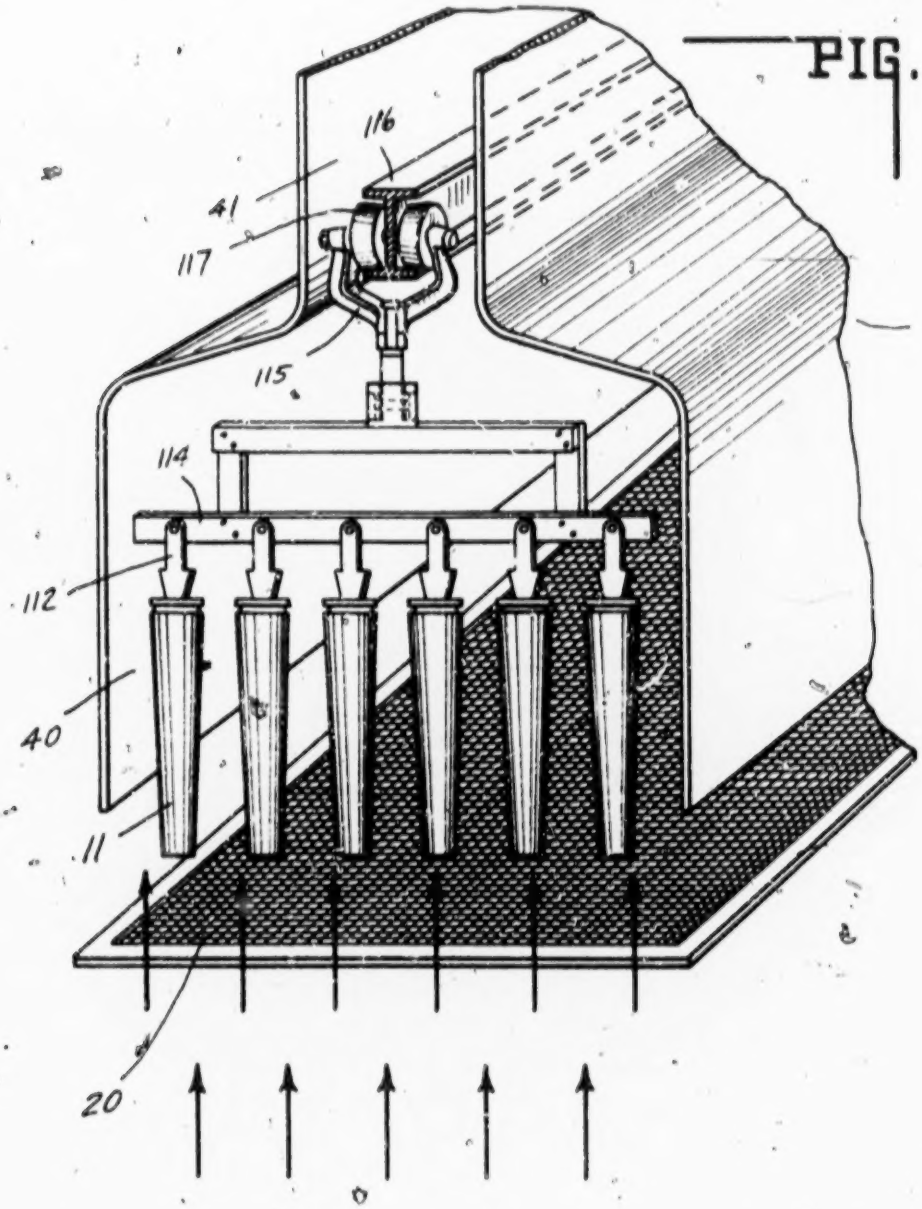

INVENTORS
HAROLD F. RANSBURG
RICHARD E. HELMUTH
By Goldsmith & Galt
ATTORNEYS.

1128

Patented Mar. 18, 1947

2,417,798

1129

UNITED STATES PATENT OFFICE

2,417,798

APPARATUS FOR COATING ARTICLES

Harold P. Ransburg and Richard E. Helmuth, Indianapolis, Ind., assignors to Harper J. Ransburg, H. Gregg Ransburg, Harold P. Ransburg, and Edwin M. Ransburg, co-partners doing business as Harper J. Ransburg Company

Application June 25, 1943, Serial No. 492,204

18 Claims. (Cl. 91—18)

1

This invention relates generally to apparatus for coating articles with the aid of an electrostatic field as set forth in a general way in Letters Patent of Charles K. Gravley No. 2,359,476 granted October 5, 1944, entitled "Electrostatic method and apparatus," and Letters Patent of Ransburg and Green No. 2,247,963 granted July 1, 1941, entitled "Apparatus for spray coating articles."

This invention more particularly relates to improved coating apparatus and safety features incorporated therein.

It is the purpose of this invention to provide certain safety apparatus which will insure prevention of the gases being ignited, and thereby render entirely safe and practical the carrying out of the coating process or method as set forth in the above mentioned Letters Patent.

Another purpose of this invention is to obtain an improved coating on articles by properly combining the forces of the electrostatic field and the force of gravity.

Another purpose of this invention is to minimize further flow of the coating material following the detearing action.

Still further purposes and advantages will become apparent both by direct recitation thereof and by implication from the context as the description proceeds.

One feature of the invention resides in the provision of an electric circuit control by which the apparatus will function only when there is sufficient space or gap between the coated article and the electrode effective in conjunction therewith to provide the electrostatic field, to prevent any danger of such space or gap being so reduced as to be bridged by a spark. This is accomplished by providing a control member, such as a switch actuating bar, contact wire or electric eye in a plane so spaced from the plane of the electrode as to insure that articles clearing it will pass the electrode in such spaced relation that a spark will not occur therebetween. If any article carried through the field is of such size or so supported as to otherwise pass close enough to the electrode to create a spark, it will first actuate a switch control which will stop the conveyor and shut off the power by reason of engagement with the switch bar, wire or affecting the circuit of the electric eye.

For the purposes hereinafter discussed, a blower is so mounted in respect to the electrode as to constantly carry any volatile gases developed from coating of the articles passing thereby, away from the electrode. By means of the draft created by the blower, accumulation of volatile

2

gases between the articles and the electrode will be dissipated and carried away so as to prevent an accumulation of an explosive mixture of solvent vapor, eliminating the possibility of ignition in case a spark should occur.

A further feature of the invention resides in the provision of an apertured electrode plate, such, for example, as may be formed of expanded metal. This arrangement is particularly advantageous when the electrode extends under the articles being processed whereby an induced air current may pass upwardly therethrough in the manner and for the purposes herein described. The advantage of the apertured electrode plate extending in a plane below the travel of the articles may well be appreciated when it is understood that the electrostatic forces may then be developed to be co-directional with the forces of gravity. This arrangement of the electrode plate below the articles results in the elimination of "flow lines," smoothing down the surface and facilitating the removal of gravity flowed "tear drops."

A further advantage of the induced draft resides in its effect upon the coating material causing it to take a set simultaneously with the action of the electrostatic field in removing "tear drops," "fatty edges" and other gatherings of excess coating. This has the effect of preventing "runs" or additional accumulations thereafter.

Particularly in the case of hollow articles, we have found it is of advantage to remove the volatile gases entrapped therein. Otherwise the coating will remain fluid and not take its set during the processing. This difficulty is overcome by the induced draft directed into the interior of the article so as to dissipate the gases and permit timely setting of the coating.

The full nature of the invention will be understood from the accompanying drawings and the following description and claims:

Fig. 1 is a diagrammatical illustration in perspective showing one method of coating the article before entering the electrostatic field. Fig. 2 is a diagrammatical illustration in perspective showing the articles entering and passing through the electrostatic field embodying the safety factors of this invention. Fig. 3 is a diagrammatical illustration in perspective showing the entrance gate with one type of circuit control mounted thereon. Fig. 4 is a schematic drawing showing the conveyor drive and control circuit. Fig. 5 is a modified form of that portion of the invention for directing air current past the coated articles.

For illustration, the invention is herein shown

and described as applied to articles coated by dipping them in a bath of coating material such as lacquer. However, various other types of coating, such as paints, varnishes and similar finishes may be applied by dipping the article in a bath thereof or by spraying or the like. The invention is also described herein as applied to that type of apparatus wherein the articles are continuously conveyed through the electrostatic field by a horizontally moving conveyor above the electrode, although the invention is similarly applicable to conveyors of the type wherein the article may be conveyed vertically through the electrostatic field with one or more electrodes spaced laterally therefrom.

As illustrated herein in Fig. 1, there is shown a dipping trough 10 containing a bath of coating in liquid form through which groups of articles 11 are submerged and drawn. Said articles may comprise cylindrical shell casings to be lacquered, carried in groups or batteries suspended from a conveyor by hangers 12 through the medium of the hooks 13 engaging in the center percussion holes of the closed end of the casing, and wherein the open end of the casing is at the bottom. The hangers 12 are carried by a cross bar 14 having its ends supported by opposed conveyor chains 15 running in the channel iron tracks 16. The conveyor chains are driven in any suitable way, such as by the sprockets 17 which in turn are driven through reduction gears 18 by an electric motor 19, whereby there would be a slow uniform movement of the articles through the bath, electrostatic field and drier.

As shown in Fig. 1, the conveyor tracks dip down so as to cause the oncoming articles to engage the forward end of the dipping trough and tilt downwardly into the bath so as to eliminate air pockets within the interior of the articles.

As shown in Fig. 2, the conveyor carries the articles from the dipping trough into and through the electrostatic field to effect removal of excess coating and "tear drops." The passage of the articles through the electrostatic field is at such speed that they will remain in the field until the excess coating has been removed and that remaining on the articles has become sufficiently set to prevent further flow. Said field comprises essentially a high voltage electrode in the form of a wire mesh screen 20 which may be surrounded by a protective fencing 21. The electrode is preferably of the width of the group of articles, and of a length predetermined by the time element above referred to. It receives a negative charge of high voltage through the power line 20a connected with one terminal of the power pack 22. The electrode is suspended by short insulators 23 from the channel iron tracks 16 at a predetermined distance below the lower end of the articles, such as will be effective to create the desired field in connection therewith while sufficiently spaced to prevent a spark jumping the gap therebetween. The power pack 22 has its other terminal grounded as at 24, while the tracks 16 are similarly grounded. Thus, a circuit of high voltage created by the power pack is broken only by the gap between the articles 11 and the electrode 20, the articles 11 receiving a positive charge in respect to the negative plate through the grounded track 16, cross bar 14, hangers 12 and hooks 13.

To prevent any possibility of an oversize article, hook or hanger causing an article so grounded to pass too closely to the electrode 20, there is provided a control member here shown as a trip bar 25, across the entrance gate 26 of the fence 21. The trip bar extends across the gate in a plane sufficiently spaced from the plane of the electrode to prevent any sparking between an article passing thereabove and the electrode. The trip bar is mounted to actuate a switch 27 contained in a switch box 28 which is in series with the master switch 29 in a control box 30. The switch 27 is normally closed, being opened only in event one of the articles 11 strikes the trip bar 25. The switch then remains open until closed by removal of the oversize article. When opened, the circuit is broken through the power pack and the conveyor motor 19 so as to bring the operation to a stop until the condition is corrected. As shown in Fig. 4, the power pack 22 and motor 19 are connected in parallel and through the switches 27, 29 with a source of power indicated at 31. Similarly, the switch 27 or 29 may be actuated by other known means for opening the circuit through the power pack or motor as by a contact wire or "electric eye." Also, in some instances if dripping from the articles interferes with the trip bar or the like by accumulation thereon, it may be positioned in advance of the dipping or coating operation instead of at the entrance to the electrostatic field.

Immediately below the articles 11 passing over the electrode, as shown herein, there is positioned an apertured air duct 32 provided at one end thereof with a blower in the blower housing 33, driven by the motor 34 from a source of power indicated at 35. The apertures in the air duct are so arranged as to direct a forced draft of air upwardly with respect to the articles so as to dissipate any accumulation of explosive gases given off by the solvent of the coating material, whereby the electrostatic field will be kept clear of such gases.

In the modified form of Fig. 5, there is illustrated an arrangement whereby a natural draft is developed about the coated articles by passing them through a hood 40 open at the bottom and terminating at the top in a restricted passage or flue 41. By reason of the restricted flue, in this case a single I-beam support 116 is provided by which the carrier 115 is conveyed and guided through the flue 41 by the rollers 117, the articles 11 being suspended from the cross bar 114 by hangers 112. A draft of air, indicated by arrows, may be drawn upwardly past the articles either by natural draft due to the flue 41 or by an exhaust fan connected at the outlet thereof, as may be desired. Thus, any accumulation of volatile gases under and about the articles will be carried away so as not to present an explosive atmosphere between the articles and the electrode 20.

In the above described arrangements, an apparatus is provided in which the probability of sparking due to the high voltage of the electrodes is reduced to a minimum.

Another advantage is the elimination of gravity flowed "tear drops," which permits of an improved finish on the coated article.

Still another advantage is the simplicity with which ignition hazards are reduced by the removal of solvent vapor accumulation from the electrostatic field.

The invention claimed is:

1. Apparatus for coating a series of articles with liquid coating material including an evaporating solvent capable of producing explosive gases, said apparatus comprising means for applying liquid coating to said articles, an electrode, means for establishing an electrostatic field be-

tween said articles and electrode, a conveyor for conveying said articles into said electrostatic field past said electrode in predetermined spaced relation thereto, and means controlled by the position of one of said articles relative to said electrode before entering the electrostatic field for rendering said apparatus inoperative where said article upon entering said field would so closely approach said electrode as to induce a spark therebetween.

2. Apparatus for coating a series of articles with liquid coating material including an evaporating solvent capable of producing explosive gases, said apparatus comprising means for applying liquid coating to said articles, an electrode, means for establishing an electrostatic field between said articles and electrode, a conveyor for conveying said articles into said electrostatic field past said electrode in predetermined spaced relation thereto, and means positioned at the entrance to said electrostatic field operable by one of said articles entering said field to render said apparatus inoperative where the path of travel of said article is such that upon entering said field it would so closely approach said electrode as to induce a spark therebetween.

3. Apparatus for coating a series of articles with liquid coating material including an evaporating solvent capable of producing explosive gases, said apparatus comprising means for applying liquid coating to said articles, an electrode, means for establishing an electrostatic field between said articles and electrode, a conveyor for conveying said articles into said electrostatic field past said electrode in predetermined spaced relation thereto, means positioned at the entrance to said electrostatic field operable by one of said articles entering said field to render said apparatus inoperative where the path of travel of said article is such that upon entering said field it would so closely approach said electrode as to induce a spark therebetween, and means for inducing a current of air directed past said electrode for dissipating and removing the accumulation of explosive gases.

4. Apparatus for coating a series of articles with liquid coating material including an evaporating solvent capable of producing explosive gases, said apparatus comprising means for applying liquid coating to said articles, an electrode, means for establishing an electrostatic field between said articles and electrode, a conveyor for conveying said articles into said electrostatic field past said electrode in predetermined spaced relation thereto, means positioned at the entrance to said electrostatic field operable by one of said articles entering said field to render said apparatus inoperative where the path of travel of said article is such that upon entering said field it would so closely approach said electrode as to induce a spark therebetween, an air duct positioned with respect to said electrode and articles to direct a current of air past said articles and away from said electrode to dissipate and remove any explosive gases accumulated therebetween, and a blower for forcing air through said duct.

5. Apparatus for coating a series of articles with a liquid coating material including an evaporating solvent capable of producing explosive gases, said apparatus comprising means for applying the liquid coating material to said articles, an elongated electrode, means for establishing an electrostatic field between said articles and electrode, a conveyor for continuously conveying said articles past said coating means into said electrostatic field and past said electrode in spaced relation thereto, an electric motor for driving said conveyor, an electric circuit for controlling said motor and the means for establishing said field, and a member disposed at the entrance to said field operable by any one of said articles extending beyond a predetermined position with respect to said electrode for opening said circuit and rendering the apparatus inoperative where said article would otherwise so closely approach said electrode as to permit of sparking therebetween.

6. Apparatus for coating a series of articles with a liquid coating material including an evaporating solvent capable of producing explosive gases, said apparatus comprising means for applying the liquid coating material to said articles, an elongated electrode, means for establishing an electrostatic field between said articles and electrode, a conveyor for continuously conveying said articles past said coating means into said electrostatic field and past said electrode in spaced relation thereto, an electric motor for driving said conveyor, an electric circuit for controlling said motor and the means for establishing said field, and a switch control member mounted at the entrance to said field in a plane of predetermined spaced relation to the plane of said electrode operable by any one of the articles extending beyond said plane to open said circuit and render the apparatus inoperative.

7. Apparatus for coating articles with a liquid coating material, said apparatus comprising means for dipping said articles in a bath of said coating material, means for conveying said dipped articles over a predetermined path with said coating material in a liquid state, an openwork electrode plate extending in a plane below and spaced from the path of travel of said articles, and means for establishing an electrostatic field between said articles and electrode plate whereby the electrostatic forces of said field are substantially co-directional with the forces of gravity for effecting an even downward flow of said liquid coating material and the removal of excess material accumulating at the bottom of said articles.

8. Apparatus for coating articles with a liquid coating material embodying an evaporating solvent adapted to give off explosive gases, said apparatus comprising means for dipping said articles in a bath of said coating material, means for conveying said dipped articles over a predetermined horizontal path with said coating material in a liquid state, an openwork electrode plate extending in a plane below and spaced from the path of travel of said articles, means for establishing an electrostatic field between said articles and electrode plate whereby the electrostatic forces of said field are substantially co-directional with the forces of gravity for effecting an even downward flow of said liquid coating material and the removal of excess material accumulating at the bottom of said articles, and means for inducing an upwardly directed current of air through said electrode about said articles while being conveyed through said field for removing and dissipating accumulated gases to permit timely setting of said coating.

9. Apparatus for coating articles comprising means for applying coating material to the surface thereof, a conveyor operable to convey said articles through space to permit partial drainage of said coating by force of gravity, an openwork electrode disposed below and in spaced relation to the path of travel of said articles over the

plane of which they are adapted to pass during their travel through said space, and electrical means for providing an electrostatic force between said articles and electrode capable of establishing an electric force in addition to the force of gravity for drawing excess liquid coating material downwardly from said articles.

10. Apparatus for coating articles comprising means for applying a liquid coating material to the surface thereof, means operable to convey said articles through space to permit drainage of said coating by force of gravity, a horizontally disposed openwork electrode mounted to extend below and in spaced relation to the path of travel of said articles, and electrical means for providing an electrostatic force between said articles and said electrode capable of establishing an electric force exerted in the same direction as the force of gravity and in addition thereto drawing excess liquid coating material downwardly from said articles.

11. Apparatus for coating articles comprising a tank containing a bath of coating material, a conveyor operable to submerge said articles in said bath and thereafter convey them beyond said tank, an openwork electrode spaced from said tank extending in a plane below and in spaced relation to the path of travel of said articles, and electrical means for providing an electrostatic force between said electrode and articles capable of drawing excess liquid coating material downwardly therefrom.

12. Apparatus for coating a series of articles with liquid coating material including an evaporating solvent capable of producing explosive gases, said apparatus comprising means for applying liquid coating to said articles, an electrode, means for establishing an electrostatic field between said articles and electrode, a conveyor for conveying said articles into said electrostatic field past said electrode in predetermined spaced relation thereto, and contact means located in predetermined relation to the conveyor and in advance of said electrode adapted to be contacted by said article for rendering said apparatus inoperative before the field between said article and said electrode rises to the point of creating a spark therebetween.

13. Apparatus for coating articles with a liquid coating material embodying an evaporating solvent adapted to give off explosive gases, comprising means for bathing said articles with said material, means for suspending said bathed articles with said coating material in a liquid state, an openwork electrode plate extending in a plane below and spaced from said articles, means for establishing an electrostatic field between said articles and electrode plate, whereby the electrostatic forces of said field cooperate with the forces of gravity for effecting an even flow of said liquid coating material over the surface of said articles, and means for inducing an upwardly directed current of air past said electrode and about said articles while suspended in said field for removing and dissipating accumulated gases to permit timely setting of said coating material.

14. Apparatus for coating articles with a liquid coating material, said apparatus comprising means for bathing said articles with said coating material, means for suspending said articles while said coating material is in a liquid state, an electrode extending in a plane below and spaced from said articles, means for establishing an electrostatic field between said articles and electrode, one or more insulators attached to said electrode, and supporting means to which said insulators are in turn attached, the point of attachment of each insulator to said supporting means being located above the lower portion of said articles, whereby at least that portion of each insulator adjacent said supporting means will be out of the path and free of accumulation of such coating material as may be removed from said articles by the forces of said electrostatic field and gravity.

15. Apparatus for coating an article with a liquid coating material embodying a volatile solvent, said apparatus comprising means for applying an excess of the coating material to the article, an electrode, a conveyor for conveying said article through association with said applying means and then past and in spaced relation to said electrode while said coating is still in a liquid state, means for establishing an electrostatic field between the electrode and article as the latter moves past the electrode, and means for creating an air stream flowing through said field to remove volatilized solvent therefrom.

16. Apparatus for coating a series of articles with liquid coating material including a volatile solvent capable of producing explosive gases, said apparatus comprising means for applying liquid coating to said articles, an electrode, means for establishing an electrostatic field between said articles and electrode, a conveyor for conveying said articles into said electrostatic field past said electrode in predetermined spaced relation thereto, a power-source for said field-establishing means and conveyor, switch means associated with said power source, and a switch-operating means connected to said switch and disposed at the entrance to said field for actuation by one of said articles when it is positioned to extend beyond a predetermined position relative to said electrode for rendering the apparatus inoperative when said article upon entering said field would so closely aproach said electrode as to induce a spark therebetween.

17. Apparatus for coating articles with a liquid coating material including an evaporating solvent adapted to give off explosive gases, said apparatus comprising means for dipping said article in a bath of said coating material, an electrode, means for establishing an electrostatic field between said article and electrode, said first mentioned means acting to convey said article into said electrostatic field past said electrode in predetermined spaced relation thereto, a power-source for said field-establishing means and said first mentioned means, switch means associated with said power source, and a switch-operating means connected to said switch and disposed at the entrance to said field for actuation by one of said articles when it is positioned to extend beyond a predetermined position relative to said electrode for rendering the apparatus inoperative when said article upon entering said field would so closely approach said electrode as to induce a spark therebetween.

18. Apparatus for coating a series of articles with a liquid coating material including a volatile solvent capable of producing explosive gases, said apparatus comprising an elongated electrode, means for establishing an electrostatic field between said article and electrode, a container for a supply of liquid coating material, a conveyor for carrying said articles through said supply of coating material into said electrostatic field and past said electrode in spaced relation thereto, an electric motor for driving said conveyor, an ele-

tric circuit including a switch for controlling said motor and the means for establishing said field, and a switch control member mounted at the entrance to said field in a plane of predetermined spaced relation to the plane of said electrode operable by any one of the articles extending beyond said plane to open said switch and render the apparatus inoperative.

HAROLD P. RANSBURG.
RICHARD E. HELMUTH.

REFERENCES CITED

The following references are of record in the file of this patent:

UNITED STATES PATENTS

Number	Name	Date
2,173,032	Wintermute	Sept. 12, 1939
2,174,328	Meston et al.	Sept. 26, 1939

FOREIGN PATENTS

Number	Country	Date
501,687	British	Feb. 28, 1939

1135

Sept. 8, 1953 R. H. TURNER 2,651,287

ELECTROSTATIC COATING APPARATUS

Filed March 10, 1949

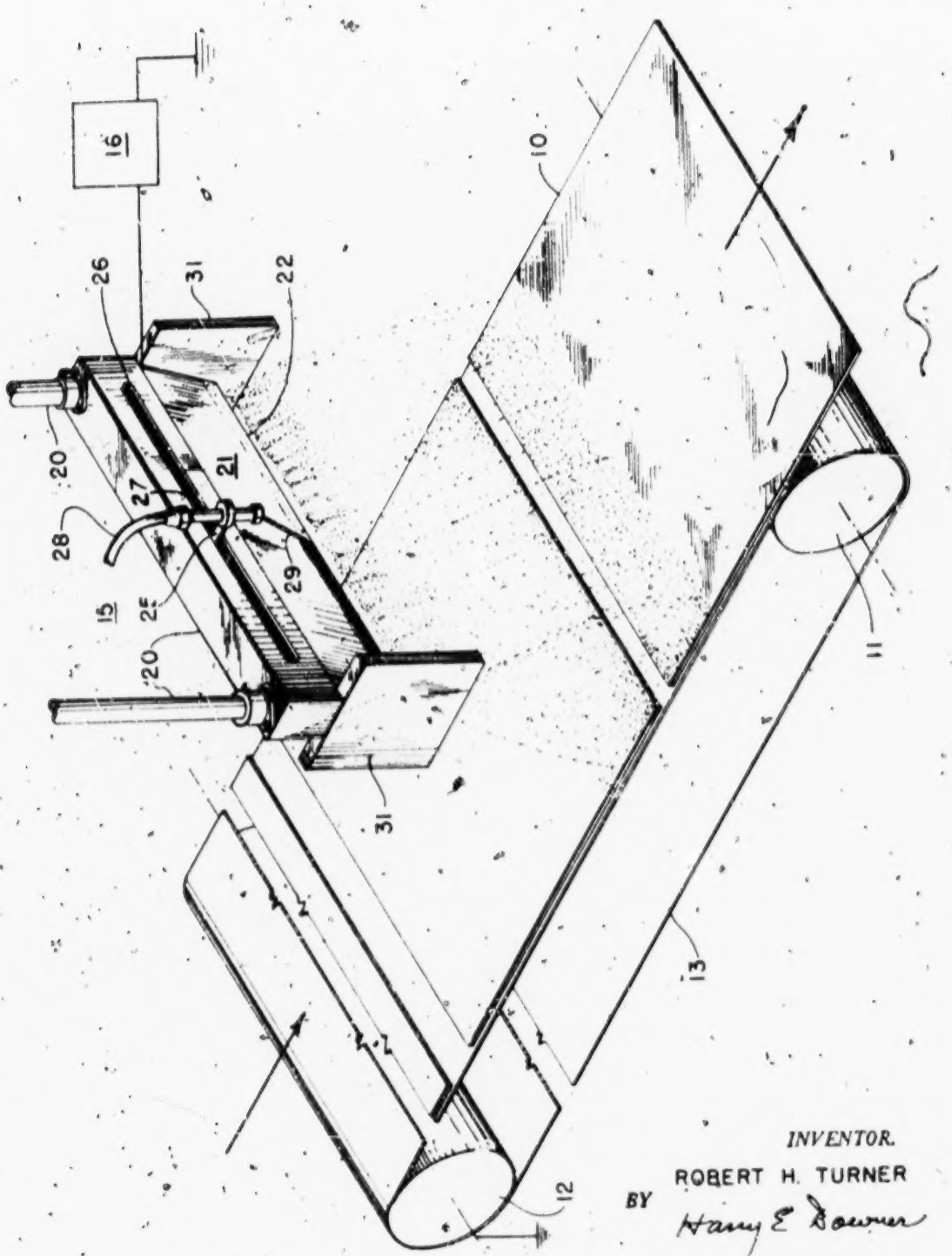

INVENTOR.
ROBERT H. TURNER
BY Harry E. Bowman
ATTORNEY

Patented Sept. 8, 1953

2,651,287

11137

UNITED STATES PATENT OFFICE

2,651,287

ELECTROSTATIC COATING APPARATUS

Robert H. Turner, Indianapolis, Ind., assignor to Ransburg Electro-Coating Corp., Indianapolis, Ind., a corporation of Indiana

Application March 10, 1949, Serial No. 80,753

7 Claims. (Cl. 118—51)

1

This invention relates to electrostatic deposition of liquid coating materials and more particularly to an improved coating apparatus in which the liquid coating material is both electrostatically atomized and electrostatically deposited upon an article to be coated.

In apparatus employed for electrostatically applying a liquid coating to discrete articles, it is common to move the articles through a coating zone in which the coating is applied to them. Similar practice is followed in the electrostatic coating of sheet material, the coating being applied as the sheet moves progressively through a coating zone.

In prior electrostatic applications where an elongated applicator head or discharge member has been used, some difficulty has been experienced due to the concentration of field strength at the ends of such discharge heads or members and the consequent fanning out of the jet of coating material away from the article to be coated. Such fanning out causes uneven coating and may result in the loss of coating material.

It is an object of this invention to overcome the disadvantages heretofore attendant upon the electrostatic atomization and deposition of coating material from an elongated discharge head. More particularly, it is an object to facilitate the attainment of a uniform distribution of coating material onto an article being coated, and to prevent scattering of coating material particles at one or both ends of the spray pattern created when liquid coating material is atomized from an elongated head. A further object of the invention is to confine the effective electrostatic field by utilizing one or more end plates or end members in electrostatic coating apparatus for achieving improved coating results.

The novel features that I consider characteristic of my invention are set forth with particularity in the appended claims. The invention itself, however, both as to its organization and operation, together with additional objects and advantages thereof, will best be understood from the following description of a specific embodiment of my invention when read in connection with the accompanying drawing which is an isometric view illustrating a coating apparatus in accordance with my invention.

In the drawing, I have illustrated an arrangement of apparatus suitable for coating sheet material 10. Such apparatus embodies a conveyor comprising rollers 11 and 12 and belt 13 which is adapted to move the sheet material through a coating zone. Either or both rolls 11 and 12

2

may be suitably connected to a driving means such as an electric motor not shown. While the conveyor here shown is adapted to handle sheet material, it is understood that conveyor mechanism adapted to carry discrete cylindrical objects or any other suitable objects are equally adapted for use with my invention. Disposed on one side of the path of material movement through the coating zone is a horizontally disposed atomizing device 15 from which the liquid coating material is electrostatically atomized. To effect atomization of the coating material and electrostatic deposition thereof on the sheet material 10 as it passes the device 15, an electrostatic field of appropriate strength is maintained between the device 15 and the sheet material. For this purpose, the sheet material may be grounded in any suitable manner such as through the roller 12 and belt 13 as shown while the device 15 is connected to one terminal of a high voltage source 16, the other terminal of which is grounded.

The atomizing device 15 comprises supporting structure 20 to which there is affixed in any convenient manner an elongated member 21 which is preferably of electrically conducting material and connected to the ungrounded terminal of high voltage source 16. The member 21 is shaped in cross section to present toward the article 10 a relatively sharp or attenuated edge 22. An average potential gradient in excess of 3,000 volts per inch and preferably in the neighborhood of 8,000 volts per inch average potential gradient is maintained between the member 21 and the sheet material 10 moving past it, and as a result an electrical discharge will exist along the edge 22 so that liquid coating material fed to such edge will be electrostatically atomized and electrostatically deposited onto the sheet material 10. The coating material is fed to the edge 22 in the form of a film extending along the edge between more or less definite limits, such film being created and maintained by any suitable distributing means. One such means may comprise a lever 25 mounted for horizontal reciprocation in slot 26 of support 20 and between appropriate guide means not shown. This lever may carry at its end a short length of tube or pipe 27 disposed transversely of the lever. One end of the tube 27 is connected as through a flexible hose 28 with a source of coating material which is adapted to be fed to the tube 27 either by gravity or by positively produced pressure. To the opposite end of the tube 27, there is connected a nozzle 29 having its outer end disposed close to the edge 22 of the discharge device but spaced rearwardly

a short distance from such edge so as to be electrically shielded thereby. The means employed to reciprocate the lever 25 and the nozzle 29 may take various forms. One such means is shown and described in application Serial No. 57,260 of Edwin M. Ransburg, filed October 29, 1948.

As previously stated, where an elongated applicator head or member is used the end portions of the jet or spray issuing therefrom waver erratically. This results in scattered dispersion of the particles composing these parts of the jet thereby causing the deposited pattern to be irregular and uneven and also may result in the loss of some of the coating particles. My invention is directed to improved apparatus for overcoming these objectionable characteristics in order to secure a spray pattern of improved uniformity and definition. In this improved apparatus, the elongated member 21 is provided with a field-modifying member 31 located on the member 21 beyond one or each end of the film thereon and projecting forwardly from the edge 22 toward the article to be coated. In most instances, the field-modifying members 31 will be located at the ends of the elongated member 21 and desirably project laterally therefrom at the sides as well as forwardly toward the article. In one device which was built and which operated satisfactorily at a potential of 80,000 volts and with the edge 22 ten inches from the article being coated, the members 31 extended two inches beyond the cross-sectional extremities of the applicator head. The members 31 may be made either of electrical insulating or electrical conducting material, but members of electrical conducting material have a more pronounced confining result on the effective electrostatic field than members of electrical insulating material.

By the use of the members 31, I have been able to diminish the tendency of the spray from an elongated head to fan out at its ends, and have thereby been able to obtain more concentrated and uniform coating as well as better definition of the deposited pattern at its ends.

What I claim is:

1. In an electrostatic atomizing device for use in the electrostatic deposition of liquid coating material on an article, a discharge head having an elongated member of electrically conductive material provided with an elongated, rectilinear edge, means for supplying liquid coating material to said edge, two field-modifying members provided on said head and comprising a pair of plates secured to said head normal to said edge, with each plate having a portion projecting laterally from said elongated member and forwardly from said edge, said plates being located at points adjacent to and beyond the opposite ends of the liquid at said edge, means for connecting the discharge head to a source of high electrical potential to create between said head and the article an electrostatic field sufficient to atomize coating material supplied to said edge and to move the same toward the article, and means for supporting the head in opposed relationship to the article and at a distance sufficient to permit substantial dispersion of the atomized particles during their movement toward the article.

2. Apparatus for coating an article comprising, in combination, an atomizer having an elongated discharge edge to which liquid is supplied as a film for atomization therefrom, means including a high voltage source for establishing between the article and liquid on said discharge edge an electrostatic field having a potential difference sufficient to atomize the liquid and move the atomized particles toward said article in the form of a spray, means for supporting the article in opposed relation to the atomizer and at a sufficient distance to permit substantial dispersion of the atomized particles during their movement toward the article, and a field modifying member supported adjacent said discharge edge, said field-modifying member terminating in an extended edge which projects forwardly of said discharge edge toward said article and into the peripheral portion of the field to compress said portion of the field.

3. The invention set forth in claim 2 with the addition that said field modifying member is made of electrically insulating material and is maintained in the same electrical relationship to the article as is the atomizer.

4. In an electrostatic coating system, an atomizing device for use in the electrostatic deposition of liquid coating material on an article comprising a discharge head having an elongated edge, means for supplying liquid coating material to said edge as a film for atomization therefrom, means for causing relative movement between said head and the article, means for creating an electrostatic charge differential between the atomized particles and an article electrostatically to deposit the particles on the article, and field modifying means secured to said head with a terminal portion projecting beyond said elongated edge and located adjacent to and beyond the extremities of the liquid on said edge.

5. In an electrostatic coating system, an atomizing device for use in the electrostatic deposition of liquid coating material on an article comprising a discharge head having a member of electrically conductive material provided with an elongated edge, means for moving the article in a predetermined path adjacent said edge, means for supplying liquid material to said edge and for forming the material into a film thereat for atomization from an edge of the film, means for creating an electrostatic charge differential between the coating material particles atomized from said edge and the article to form therebetween an electrostatic field for moving the atomized particles of coating material through quiescent air and depositing them on said article, and a field modifying member positioned in fixed relationship to said head and provided with at least two spaced portions located adjacent to and projecting beyond said elongated edge to compress the peripheral portions of said depositing field.

6. Apparatus for coating an article comprising, in combination, an atomizer supported in opposed spaced relationship to an article to be coated and having a discharge member, means for supplying liquid coating material to said atomizer, means including said discharge member for forming the material fed to said atomizer into a film having an elongated edge for atomization from said edge, means for causing relative movement between the article and the atomizer, means including an electrode adapted to be connected to a high voltage source for establishing between the article and the coating material particles atomized from the atomizer an electrostatic field having a potential difference sufficient to move the particles through quiescent air toward the article for deposition thereon, with the spacing between said atomizer and the article being sufficient to permit substantial dispersion

of the particles during their movement toward the article, and a field-modifying member having an end portion, said end portion projecting forwardly of said edge to constrict the depositing field at the location of said end portion.

7. Apparatus for coating an article comprising, in combination, an atomizer supported in opposed spaced relationship to an article to be coated and having a discharge member, means for supplying liquid coating material to said atomizer, means including said discharge member for forming the material fed to said atomizer into a film having an elongated edge for atomization from said edge, means including a high voltage source for establishing between the article and the coating material particles atomized from the atomizer, an electrostatic field having a potential difference sufficient to move the liquid particles through quiescent air toward the article for deposition thereon, with the spacing between said atomizer and the article being sufficient to permit substantial dispersion of the particles during their movement toward the article, and field-modifying means having at least two portions supported to project in opposed relationship forwardly of said edge to constrict said field at the location of the projecting portions.

ROBERT H. TURNER.

References Cited in the file of this patent

UNITED STATES PATENTS

Number	Name	Date
Re. 20,660	Schacht	Feb. 22, 1938
2,097,233	Meston	Oct. 26, 1937
2,152,077	Meston et al.	Mar. 28, 1939
2,194,253	Benner et al.	Mar. 19, 1940
2,221,338	Wintermute	Nov. 12, 1940
2,451,288	Huebner	Oct. 12, 1948
2,466,906	Miller	Apr. 12, 1949

1141

Nov. 3, 1953 E. M. RANSBURG 2,658,009

ELECTROSTATIC COATING METHOD AND APPARATUS

Filed May 13, 1948

Fig. 3

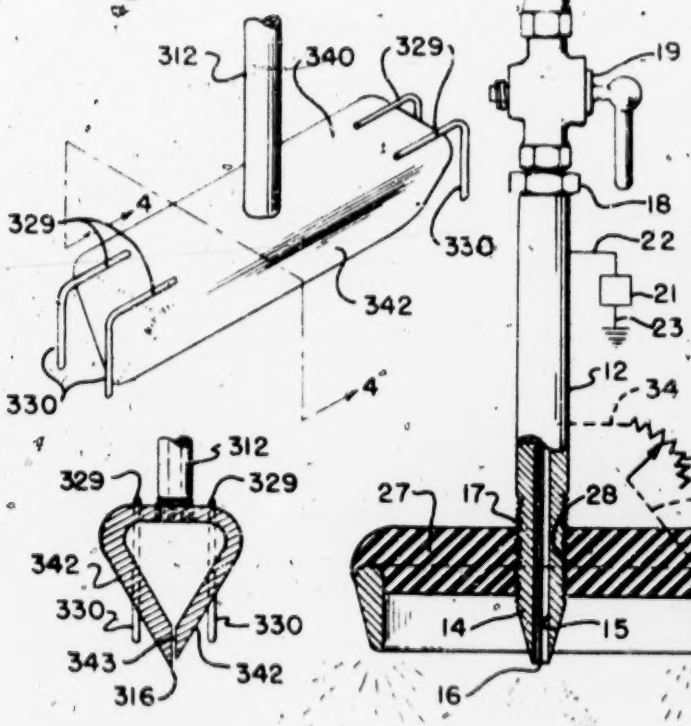

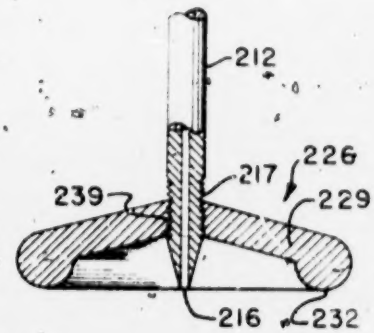

Fig. 2

Fig. 4

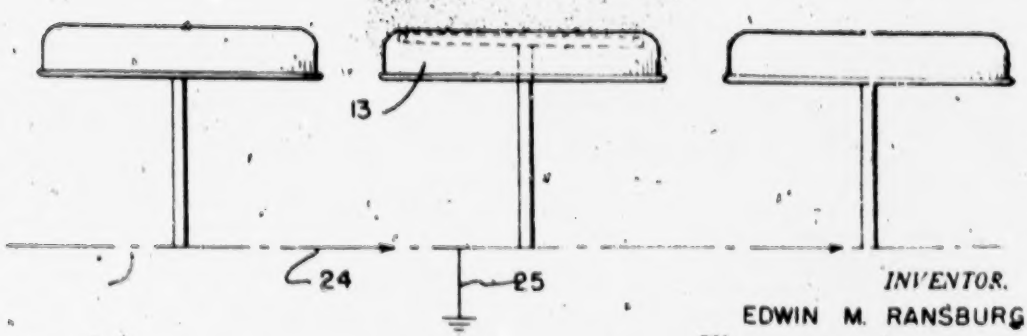

Fig. 1

INVENTOR.
EDWIN M. RANSBURG
BY Harry E. Downer
George A. Drawbaugh

Patented Nov. 3, 1953

2,658,009

1143

UNITED STATES PATENT OFFICE

2,658,009

ELECTROSTATIC COATING METHOD AND APPARATUS

Edwin M. Ransburg, Indianapolis, Ind., assignor to Ransburg Electro-Coating Corp., Indianapolis, Ind., a corporation of Indiana

Application May 13, 1948, Serial No. 26,867

10 Claims. (Cl. 117—93)

1

This invention relates to the application of liquid coating to articles by electrostatically atomizing, projecting and depositing the coating upon the articles within an electrostatic field created between the articles and an issuing source of the coating material. This general process of applying coatings is disclosed in the U. S. applications of William A. Starkey et al., Serial No. 556,390, filed September 29, 1944, William W. Crouse, Serial No. 13,174, filed March 5, 1948, and William W. Crouse, Serial No. 141,509, filed January 31, 1950, said application Serial No. 13,174 being now abandoned. The invention is particularly directed toward providing greater stability to the projected spray or jet and imparting a sharper edge definition to its issuing pattern.

In such electrostatic coating process as generally practiced, the article to be coated is supported in opposed spaced relation to a sharp edged electrode between which and the article a potential difference of sufficient magnitude is maintained to create an electrostatic field with an atomizing corona discharge in the region adjacent said edge. The coating material is arranged to be supplied to the edge and its region of corona discharge at a rate no greater than that at which it can be electrically atomized by the corona discharge, whereupon the charged particles are projected in spray form toward and deposited upon the oppositely charged article. In certain instances, possibly due to fluctuations in intensity of the corona discharge perhaps caused by minute imperfections at different portions of the electrode edge or for other reasons, the projected jet is unstable in the sense that its axis wanders erratically or shifts from one position to another while also varying in cross-sectional shape. Instability in the direction and form of the jet results in an undesirable, irregular scattering of the coating material upon the surface of the article. Since each particle composing the jet is charged to the same electrical sign, the inherent electrical repulsion effect causes the particles to spread laterally from each other.

This spreading action is more noticeable at the outer portions of the jet and results in an irregular, uneven and indistinct edge definition to the pattern of the coating material as deposited upon the article. I have discovered that by surrounding in close proximity the atomizing, projecting and depositing electrostatic field with a secondary electrostatic field that is substantially coextensive, longitudinally with the former, the projecting spray jet is stabilized, is made more

2

definite in shape and more constant in direction, and the scattered spreading effect upon the particles, particularly at the outer portions of the jet, is materially reduced. This results in a deposited pattern which is more uniformly dense throughout and which has a sharp edge definition.

It is an object of the present invention to provide in an electrostatic method and coating apparatus of the character above set forth, a secondary stabilizing field adjacent the electrostatic spray atomizing, projecting and depositing field that is effective to stabilize the jet produced by the latter, both directionally and in respect to shape, and to give a resulting deposited pattern which has a relatively sharper edge definition, either throughout its entire periphery or over one or more portions of its periphery.

It is a further object of the invention to provide a method and apparatus of this character in which the atomizing projection in jet form, deposition and control of the jet—all three—are accomplished by a single form of energy. This adds materially to the simplicity and efficiency of the method, to compactness, smoothness and quietness of operation, and low cost of the apparatus for practicing it.

A further object of the invention lies in the provision of a simply constructed, unitary and inexpensive spray head for an electrostatic coating apparatus of the character set forth.

These and other features of the invention will be best understood and appreciated from the following description of various embodiments selected for purposes of illustration and shown in the accompanying drawings in which:

Fig. 1 is a side elevation of one form of the improved elecstrotatic atomizing apparatus with the secondary, stabilizing field control electrode mounted on the atomizing head and illustrates diagrammatically the general arrangement of the head in the electrical circuit and its disposition with respect to the articles to be coated.

Fig. 2 is a side view, partly in section, showing a modified form of said head and secondary field producing electrode.

Fig. 3 is an isometric view of a modified form of head with a correspondingly modified form of secondary field producing electrode, such head and electrode being adapted to disperse an extended, elongate wedge-shaped jet in contra-distinction to the generally conically formed jets produced by the types of heads illustrated in Figs. 1 and 2, and

Fig. 4 is a sectional elevation taken along the line 4—4 of Fig. 2.

Referring to Fig. 1, the apparatus comprises a length of relatively small diameter (on the order of ⅜" O. D.) tubing 12, preferably of electrically conducting materials. Tube 12 is arranged to be supported in any suitable manner in spaced relation with its longitudinal axis disposed at substantially right angle to the surface of the article 13 to be coated and with its nozzle or tip end 14 projecting toward the article. The nozzle or tip 14 is formed by beveling the outer surface of the tube from a point adjacent the end, gradually toward the end and toward the interior surface of the bore 15 (the bore being of a diameter on the order of ⅛"), thus providing a continuous, annular edge 16 of knife-like sharpness. Adjacent the beveled tip 14, the tube is threaded exteriorly as at 17 for a short distance of its length for a purpose later to be described. The opposite end of the tube is connected to a valve coupling 18 having a hand operated valve 19 which is suitably connected by means of tubing 20 to the supply source of the liquid coating material (not shown), that is to electrostatically atomized, projected and deposited upon the article 13. The source of liquid material may be disposed at an elevation above the tube so that the liquid feeds by gravity through the bore 15 or, if desired, it may be fed under pressure by compressed air or the like to the bore 15 through which it is conducted to the discharge edge 16. The rate of flow of the coating material to the edge 16 should preferably be no greater than that which can be electrically atomized, whether such rate of flow is established by gravity or pressure feed or both.

A source of high voltage illustrated diagrammatically at 21 has one of its terminals connected by a conductor 22 to the tube 12 and its opposite terminal connected by a conductor 23, either directly to the conveyor 24 upon which the articles to be coated are mounted or to ground. In the event the conductor 23 is connected to ground, a conductor 25 may be connected from ground to the conveyor as shown. The voltage source 21 is preferably capable of producing voltages of unidirectional current upwardly from 22 kv. to 125 kv. With a voltage of 60 kv. applied to the tube, with its knife-like discharge edge 16 at a distance of approximately 14 inches from the surface of the article to be coated, it has been found that corona discharge will be formed in the region adjacent said edge of an intensity which is sufficient to break up or atomize into particled form the coating material which is being fed to said edge and project said coating material in a generally conical spray form toward the surface of the article being coated. The electrostatic field established between the discharge edge 16 and the surface of the article further imparts an electrical charge to each particle and causes the electrostatic deposition of the projected, atomized coating material onto the surface of the oppositely charged article.

As previously stated, under certain conditions possibly due to fluctuations in the brush or corona discharge, perhaps because of minute imperfections at different portions of the edge 16 or for other reasons, the projected jet wavers erratically and continuously, first at one angle and then another. This results in a scattered dispersion of the particles composing the jet and thereby causes the deposited pattern upon the article to have irregularly disposed lobes. In addition, the mutual electrical repulsion of the particles due to their being charged to the same sign causes them to spread and scatter laterally and particularly at the outer portions of the jet. This makes for a less sharply defined edge at the boundary of the deposited pattern. To overcome these objectionable characteristics, I provide a secondary field surrounding in close proximity the electrostatic atomizing field and coextensive in length with the latter. By coextensive I mean extending from an electrode having an edge which is supported substantially coplanar with but in spaced relation from the corona discharge atomizing edge to and terminating at the surfaces of the articles to be coated.

The means for effecting the establishment of a secondary field consists of an electrode or control member 26 which utilizes the electrostatic forces created by high voltage source 21 to create said secondary electrostatic field in the gaseous medium surrounding the jet. Control member 26 is comprised of a disk 27 of electrically nonconductive material having a centrally disposed bore 28 which is threaded to screw onto the thread 17 adjacent tip 14. The disk is of such diameter that its periphery extends outwardly from the outer surface of the tube by a distance on the order of 1¾ inches. A cylindrical element 29 of electrically conductive material and of generally wedge-shaped cross-section and having its divergent side walls merging into its upper rounded, wider edge 30 is secured in a conformed recess 31 provided in the lower face of disk 27 adjacent its periphery. The opposite narrower edge 32 of element 29 projects beyond the plane of the lower face of disk 27 for a distance substantially equal to the thickness of the disk and in the general direction of discharge edge 16. Edge 32 is relatively sharp, but preferably the sharpness of this edge is substantially less than the sharpness of discharge edge 16 of tip 14. The assembled components of control member 26, just described, may be adjusted bodily, as a unit, longitudinally of tube 12 by simply rotating the member on the threads 17 to position the edge 32 closer to or further away from the plane of discharge edge 16.

When the edge 32 is of a relatively lesser degree of sharpness than edge 16, as just described and as shown in Fig. 1, it has been found in practice that best jet stabilizing, pattern controlling and atomizing results are obtained with the edge 32 positioned within a range from a position where it is coplanar with edge 16 to a plane behind said edge up to and inclusive of a distance of ⅛ of an inch. With 30 kv. applied to the tube 12 and with control member 26 adjusted as just described, element 29, through its close proximity to tube 12, receives by induction an electrical charge which is of sufficient intensity to create a secondary electrostatic field, completely around, in close proximity to, and coextensive with the primary atomizing or jet producing field. Such secondary field effects a greater stability to the projecting jet, counteracts the tendency of the particles in the outer portions of the jet to unduly spread or scatter and results in the obtaining of a more densified over-all deposition of the finely divided material upon the surface of the article, which tends toward rendering a deposited pattern having a relatively sharper edge definition than may be obtained in the absence of such secondary field. Desirably, the differential in the potential gradients of the two fields

adjacent the respective edges 16 and 32 should be adjusted and maintained in such balanced relation that the intensity created to produce the stabilizing and shaping effect shall always be slightly less than the corona discharge intensity produced to effect the atomization and projection of the coating material. Generally, this may be accomplished by the making of but a single, simple adjustment, that is, by rotating member 26 to advance or retract edge 32 toward or away from the plane of discharge edge 16. However, the potential gradient of the field terminating at the edge 32, while less than that at edge 16, may still be of sufficient intensity to produce a corona discharge.

It is noted that it has been found that as the degree of sharpness of edge 32 more nearly approaches the degree of sharpness of edge 16, effective concomitant jet stability and pattern controlling and proper atomizing functioning of the device requires edge 32 to be moved into a plane further behind the plane of the edge 16. That is to say, within a range from $\frac{1}{16}$ to $\frac{1}{8}$ inch. The distance between the separate planes occupied by the edges 16 and 32 is, of course, also governed to some considerable extent by the magnitude of the voltage applied to the tube, by the distance of the space between the element 29 and the tube, the relative discharge surface areas of the edges and also by the electrical insulating qualities of the material from which the disk 27 is fabricated.

Additional control means for establishing the proper balance in the difference in potential maintained between edges 16 and 32 may be provided if desired. This additional control constitutes a variable resistor 33 having a range on the order of 0-10 megohms connected as by means of conductors 34 and 36 across tube 12 and element 29 as shown. In such an arrangement, the element 29 receives its charge directly by conduction rather than by induction. It will be understood that the resistance means of adjustment may be used entirely independently of the screw-thread, planar-edge position adjustment, or vice-versa, or that both may be used together, the one to quickly bring the difference in potential into the proper general range and the other to obtain a precision degree of adjustment. Excellent atomization and jet stabilizing and pattern controlling results have been accomplished in using this type of head.

The rounding of the wider upper edge 30 of element 29 coupled with the backing of such edge by the rounded edge 31 of the disk 27, which it will be remembered is of nonconductive material, tends to prevent leakage or dissipation of charge from any portion of element 29 except at its discharge edge 32. If desired, with the element formed in general wedge-shaped cross section as shown, the element 29 can be mounted on the periphery of a disk such as 27 with its upper rounded edge 30 merging flush into the upper face of the disk, that is, without having the recess 31 provided in the disk and without the insulated backing to the upper rounded edge 30.

Fig 2 shows a form of electrostatic atomizing head in which the tube 212 is constructed of conductive material and in accordance with the dimensions and design of tube 12 of Fig. 1. Tube 212 is likewise threaded as at 217 adjacent its discharge edge 216 to receive the similarly threaded aperture 230 of a control member 226. Control member 226 is formed of conductive material in the general form of a disk 228 with a depending curved crown 232 formed integrally with is periphery. Depending crown 232 has a radius of curvature on the order of $\frac{1}{4}$" which serves as the jet-stabilizing and pattern-forming, field producing edge in this modification. With the lowest portion of the surface of the crown 232 adjusted to a position where it is coplanar with or tangential to the plane of the edge 216 and with a voltage on the order of 60 kv. impressed upon the tube 212, satisfactory atomization and spray pattern controlling effects have been produced with a head of this character. It is noted that the radius of curvature of the edge 232 presents a relatively much greater surface area than do the edges of the spray pattern controlling members heretofore described. The charge upon the disk 229 is in this instance received by conduction and this relatively more extensive surface area of the crown 232 is sufficient to reduce the intensity of the discharge emanating from the crown with respect to the corona atomizing discharge emanating from the edge 216, so that a proper balance in the differential of potential gradient in the spray atomizing and control fields is accomplished.

Figs. 3 and 4 illustrate a modified form of head in which the tube 312 delivers the coating material to an elongated chamber 340 of generally triangular cross section. The converging walls 342 of chamber 340 feed the coating material through a narrow aperture 343 formed between two opposed faces adjacent the lower ends of the walls 342 toward the lower projecting edge 316 of one of the side walls 342, the edge 316 constituting the discharge edge in this form of head. The secondary field establishing electrode in this embodiment takes the form of a pair of L-shaped wires 329 secured to the head at each end thereof and terminating in downwardly directed portions 330 located outwardly beyond the ends of the corona discharge edge 316 with their own ends in a plane slightly above that occupied by said edge. This type of head and its control electrode produces a generally elongate wedge-shaped jet that is substantially coextensive in length with the length of discharge edge 316. Each pair of auxiliary electrodes 330 establish at each end of the elongated jet a secondary or control field which stabilizes the end portions of the jet, densifies the end portions of the deposited spray pattern, and sharpens the definition at the ends of such pattern.

It will be understood that in instances in the foregoing description where it has not been specifically stated that the tube members which have the numeral 12 included in their reference numerals are connected to a high voltage source such as 21, that such tubes are connected to such a voltage source in order to effect their atomizing and control function in the organization of the apparatus. It may be desirable in certain instances to have the conductor such as 32 enter the tube and come into direct contact with the coating material.

I am aware that it is known to surround with an electrostatic field a carrier stream or jet of air or other gas which carries suspended particles of coating material and which is directed at and substantially normal to an extended surface to be coated. In such method, which is shown in U. S. Paten. No. 2,221,338, issued to Harry A. Wintermute, November 12, 1940, the field is employed for the purpose of precipitating coating-material particles which might otherwise be carried away with the air or other

ga escaping laterally from the point at which the stream or jet impinges upon the surface to be coated. In other words, the field acts to offset or counteract for the diverting effect of the article being coated on the carrier gas stream and is intended to act only on coating-material particles which have been subject to the consequences of that diverting effect. Many of the particles, especially those near the axis of the jet, are deposited without ever acquiring a charge and hence without benefit of the field; and the field neither shapes nor stabilizes the carrier gas stream nor affects in any way the initial direction of particles leaving the discharge head or nozzle.

The secondary or stabilizing field which is created by the auxiliary or control electrode 26, 226, or 326 in the practice of my invention functions in an entirely different manner Where the enclosing field of the prior art acted to precipitate coating-material particles in the desired region in spite of existent diverting influences tending to carry them beyond such region, I employ my stabilizing field to suppress the diverting influence or influences completely. I am enabled to do this because only electrostatic forces control and determine the respective paths of the coating-material particles during their atomization, their projection, and their deposition. It is an inherent characteristic of electrostatic fields that their lines of force cannot intercept or cross each other. Therefore, the secondary or stabilizing field of my invention distorts the primary (or the atomizing, projecting, and depositing) field, reduces its spread, and in general stabilizes it. As the coating-material particles, during the successive steps of their atomization, projection, and deposition, are accelerated along the lines of force of the primary field, the distorting effect of the secondary field on the primary field modifies the path of each individual particle in the outer portions of the jet from the instant such particle leaves the discharge head until it is finally deposited.

In the practice of my invention, the entire operation—i. e., the production of the spray and its control and deposition—is completely free of the turbulent, scattering, and difficultly controllable effects produced by air streams such as are customarily used in effecting atomization and spray-pattern control in conventional air-operated spray guns. The use of a single character of energy to effect atomization, projection, deposition, and pattern-control simplifies design and construction of the apparatus and effects a marked economy in its manufacture.

In the embodiments of my invention shown in Figs. 1 and 2, the electrodes 32 and 232 which create the respective stabilizing fields are circumferentially continuous and completely surround the jet-source. In many instances, it may not be deemed necessary to control and stabilize the entire peripheral portion of the jet; and in such instances the auxiliary electrode which creates the secondary field need not completely surround the jet-source. One such arrangement is contemplated in Figs. 3 and 4, where the secondary field created by the auxiliary electrodes 326 is fairly well confined to the region adjacent the ends of the elongated jet projected from the elongated discharge head. Where the auxiliary field is to have any considerable extent over the periphery of the projected jet, the discharge electrode may either have a relatively sharp edge continuous over the desired extent or it may comprise a plurality of pointed elements similar to the electrodes 326.

In electrostatic atomizing heads of the type set forth in the copending applications above referred to, the region outside of but immediately adjacent the projected jet will contain some lines of force terminating on the atomizing head above or in rear of the jet-source. The field which those lines of force might be regarded as constituting is not such a secondary stabilizing and controlling field as is employed in the practice of the present invention, primarily because its intensity is too low to produce any significant stabilization of the peripheral portions of the jet or any significant sharpening in the edge definition of the deposited pattern. For the accomplishment of my purpose, the composite electrostatic field, including both the component which has been herein referred to as the atomizing, projecting, and depositing field and the component referred to as the secondary or stabilizing field, must be characterized by the existence in, or approximately in, a plane spaced from the article surface being coated of two or more regions of relatively high potential gradient separated by an intervening region or regions of relatively low potential gradient, with atomization of the coating material taking place at one of the regions of high potential gradient while the other or others of such regions constitute the terminal portions of the secondary or stabilizing field. Thus, in each of the heads shown in Figs. 1 and 2, the field will have a region of high potential gradient at the discharge edge 16 or 216 and a second region of high potential gradient at the edge 32 or 232 of the control electrode; while in the region between the discharge edge and the edge of the control electrode the potential gradient of the field will be much lower. Similarly, in the device of Figs. 3 and 4, a region of high potential gradient will exist along the discharge edge 316 and at the tip of each of the control electrodes 326; but between each end of the discharge edge 316 and the tips of the adjacent control electrodes 326 the potential gradient of the field will be low.

Atomizing heads shown in the copending applications referred to above do not meet the requirements just mentioned; for the potential gradient of the field over the surface of the atomizing head decreases substantially progressively away from the localized region or regions at which atomization takes place.

I claim as my invention:

1. In the deposition of liquid material onto a surface, the steps of electrostatically atomizing liquid material from a source thereof, electrostatically projecting the atomized liquid material in the form of a jet onto the surface, and maintaining a corona discharge spaced from said source but sufficiently close to control the jet of atomized liquid material.

2. In the deposition of liquid material onto a surface, the steps of electrostatically atomizing liquid material from a source thereof, electrostatically projecting the atomized liquid material in the form of a jet onto the surface, and maintaining a corona discharge surrounding and spaced from said source but sufficiently close to control the jet of atomized liquid material.

3. In apparatus for electrostatically forming a divergent jet and applying particles of liquid coating material composing said jet upon a surface of an article, a nozzle having a discharge edge of knife-like sharpness, means for support-

ing said nozzle and presenting its discharge edge toward the article to be coated and in spaced relation therefrom, a tube communicating with said nozzle and adapted to convey a stream of said liquid material to said edge, an electrically conductive member having a discharge edge of a lesser degree of sharpness than said first named discharge edge, means for insulatingly supporting said conductive member with its discharge edge substantially coplanar with but in spaced relation from said first discharge edge and similarly presented in spaced relation toward the article to be coated, high voltage means connected with said first named edge for maintaining it at a potential different from the article and for creating a corona discharge thereabout to electrostatically atomize said material from said first edge and project such atomized material in particled jet form to the surface of the article to be coated, said high voltage means and first named edge being effective to impress by induction an electric field around the edge of said electrically conductive member of a potential sufficient to electrostatically stabilize the jet axially and shape the diverging spray formation of the particles as they are removed and propelled by the corona discharge emanating from said nozzle edge.

4. In apparatus for electrostatically coating an article with coating material, an applicator means, means for supporting said applicator means in spaced relation from an article to be coated, two members on said applicator means, said members having opposed surfaces defining a passage, one of said members projecting toward the article beyond said other member, a surrounding control member supported substantially coplanar with said projecting member in spaced relation therefrom, means for supplying coating material to the projecting member of said applicator means, and means for creating an electrostatic field of high potential between said applicator means and the article to be coated to electrostatically atomize the coating material delivered to said projecting member and electrostatically deposit it on the article being coated, said field creating means being also effective to create a surrounding field between said control member and said article.

5. Apparatus for applying atomized liquid coating material to an article, comprising an applicator means including a member with a discharge edge, means for supporting said applicator means with the discharge edge spaced from the article being coated, a control electrode supported in spaced relation to said discharge edge and the article being coated, means for supplying liquid coating material to said discharge edge, and means for creating an electrostatic field of high potential between said discharge member and the article to be coated to electrostatically atomize in the form of a jet the coating material supplied to said discharge edge and electrostatically depositing the atomized coating material on the article being coated, said field-creating means being also adapted to create a secondary electrostatic field between said control electrode and the article being coated for controlling the jet of atomized coating material.

6. Apparatus for applying atomized liquid coating material to a surface, comprising a head, means for supporting said head in opposed spaced relation to such surface, said head having spaced first and second projecting portions extending toward such surface, said second projection being annular and surrounding the first projection, means including a high-voltage source for maintaining between such surface and the first projection a primary electrostatic field capable of producing a corona discharge at the first projection and for maintaining a secondary field between the surface and second projection, and means for supplying liquid coating material to the first projection for atomization within such corona discharge, said primary field serving to precipitate on to said surface the electrically charged particles resulting from such atomization.

7. Apparatus as set forth in claim 5 with the addition, that said control electrode is annular and surrounds the discharge edge, said discharge edge extending toward the surface at least as far as does the control electrode.

8. Apparatus for applying atomized coating material to an article comprising a support for the article to be coated, an applicator means including a member with a discharge edge, means for supporting said applicator means with the discharge edge spaced from an article on said support, a control electrode supported in spaced relation to said discharge edge and the article being coated, means for supplying liquid coating material to said discharge edge, and means for creating an electrostatic field of high potential between said discharge member and the article to be coated sufficient to electrostatically atomize in the form of a spray the coating material supplied to said discharge edge and to move the spray particles through quiescent air and electrostatically deposit the atomized coating material on the article, the space between said discharge edge and the article on said support being sufficient to permit the spray particles to be dispersed during their movement toward the article, said field creating means being also adapted to create a secondary electrostatic field between said control electrode and the article being coated for controlling the spray of atomized coating material.

9. Apparatus for applying atomized coating material to an article comprising a support for the article to be coated, an applicator means including a member with an extended discharge edge, means for supporting said applicator means with the discharge edge spaced from an article on said support, a control electrode supported in spaced relation to said discharge edge and the article being coated, means for supplying liquid coating material to said applicator means, means for forming the material supplied to said applicator means into a thin sheet-like body having a longitudinal extent many times its transverse thickness and for moving the body toward said discharge edge, and means for creating an electrostatic field of high potential between said discharge member and the article to be coated sufficient to electrostatically atomize in the form of a spray the coating material from said body and to move the spray particles through quiescent air and electrostatically deposit the atomized coating material on the article, the space between said discharge edge and the article on said support being sufficient to permit the spray particles to be dispersed during their movement toward the article, said field creating means being also adapted to create secondary electrostatic field between said control electrode and the article being coated for controlling the spray of atomized coating material.

10. Apparatus for applying atomized coating material to an article comprising a support for

the article to be coated, a single fluid atomizing means including a member with a discharge opening, means for supporting said atomizing means with the discharge opening spaced from an article on said support, a control electrode supported in spaced relation to said discharge opening and the article being coated, means for supplying liquid coating material to said discharge opening, and means including another electrode for creating an electrostatic field, extending to the coating material supplied to said opening, and extending over the surface of the article to be coated of sufficient strength to electrostatically atomize in the form of a spray the coating material supplied to said discharge opening and to move the atomized spray particles through quiescent air and electrostatically deposit the atomized coating material on the article, the space between said discharge opening and the article on said support being sufficient to permit the spray particles to be dispersed during their movement toward the article, said field creating means being also adapted to create a

secondary electrostatic field between said control electrode and the article being coated for controlling the spray of atomized coating material.

EDWIN M. RANSBURG.

References Cited in the file of this patent

UNITED STATES PATENTS

Number	Name	Date
1,855,869	Pugh	Apr. 26, 1932
2,956,406	Darrah	May 15, 1934
2,074,935	Potthoff	Mar. 23, 1937
2,097,233	Meston	Oct. 26, 1937
2,187,306	Formhals	Jan. 16, 1940
2,221,338	Wintermute	Nov. 12, 1940
2,224,391	Huebner	Dec. 10, 1940
2,287,837	Smyser	June 30, 1942
2,359,476	Gravley	Oct. 3, 1944
2,421,787	Helmuth	June 10, 1947
2,446,953	Ransburg	Aug. 10, 1948
2,451,288	Huebner	Oct. 12, 1948
2,546,701	Ransburg et al.	Mar. 27, 1951
2,562,358	Huebner	July 31, 1951

E COPY

VOLUME III

TRANSCRIPT OF RECORD

Supreme Court of the United States

OCTOBER TERM, 1960

No. 501

BINKS MANUFACTURING CO.,
PETITIONER,

vs.

RANSBURG ELECTRO-COATING CORPORATION.

ON WRIT OF CERTIORARI TO THE UNITED STATES COURT OF APPEALS
FOR THE SEVENTH CIRCUIT

PETITION FOR CERTIORARI FILED OCTOBER 24, 1960

CERTIORARI GRANTED DECEMBER 19, 1960

INDEX.

Exhibits to Defendant's Answer to Plaintiff's Interrogatory No. 8, Defendant's Contract Forms..... 1

Exhibit D-11—Ransburg Electrostatic Spray Process Agreement, adopted May, 1953..... 1

Exhibit D-12—Ransburg Electrostatic Spray Process Agreement, adopted May, 1953..... 6

Exhibit D-21—Ransburg Electrostatic Spray Process Agreement, adopted July, 1956..... 431

Exhibit D-22—Ransburg Electrostatic Spray Process Agreement, adopted July, 1956..... 15

Exhibit D-30—Ransburg Electrostatic Spray Process Agreement, adopted April, 1954..... 18

Exhibit D-32 — Ransburg Electro-Spray Agreement, adopted Jan. 1955..... 24

Exhibit D-33 — Ransburg Electro-Spray Agreement, adopted March, 1955..... 31

Exhibit D-36 — Ransburg Electro-Spray Agreement, adopted May, 1956..... 37

Exhibit D-38 — Ransburg Electro-Spray Agreement, adopted Aug. 1956..... 42

Defendant's Interrogatories and Plaintiff's Answers.. 45

Defendant's Request for Admissions and Answers... 53

Plaintiff's Exhibit MMMM—Deposition of Emery P. Miller 58

TRANSCRIPT OF PROCEEDINGS.

Testimony of Emery P. Miller.....63, 436

Plaintiff's Exhibit NNNN—Deposition of Donald C. Howarth 123

TRANSCRIPT OF PROCEEDINGS.

Testimony of Donald Colin Howarth 128
Testimony of William J. Stellman 134, 437
Plaintiff's Exhibit KKKK—Deposition of Edwin M. Ransburg 145, 442

TRANSCRIPT OF PROCEEDINGS.

Testimony of Edwin M. Ransburg 156, 439
Plaintiff's Exhibit LLLL—Deposition of Harold P. Ransburg 161

TRANSCRIPT OF PROCEEDINGS.

Testimony of Harold P. Ransburg 164
Plaintiff's Exhibit LLLLL—
Deposition of Burke Bernard Roche 208, 442
Deposition of John W. Baur 250
Deposition of Benjamin J. Hedger 255
Plaintiff's Exhibit MMMMM—Deposition of James H. Rice 259
Plaintiff's Exhibit NNNN—
Deposition of Milton F. Pleva 266, 444
Deposition of Elmer Houlberg 269
Deposition of Paul Rothe 274
Plaintiff's Exhibit OOOO—
Testimony of William A. Darrah 445

DEFENDANT'S EXHIBITS.

No. 7—Drawing of "Typical Installation Employing Overhead Monorail Conveyor" 460
No. 8-A & B—Colored Drawing of Patent No. 2,685,536 279

No. 11-A & B—Drawing of "Disk Emitter in Power Supply Circuit Spraying Articles" 461-462
No. 19—Claim drafted by Mr. Stellman 281
No. 23—Ransburg Sales Bulletin No. 55—August 29, 1947 282
No. 24—Ransburg Bulletin dated Aug. 18, 1950 283
No. 26—Ransburg Bulletin dated May 27, 1953 284
No. 27—Ransburg Sales Bulletin No. 130, dated May 13, 1954 313
No. 28—Ransburg Sales Bulletin No. 148, dated April 4, 1955 315
No. 29—Ransburg Sales Bulletin No. 171, dated June 6, 1956 344
No. 30—Agreement Serial No. 5409 with Hillgren Mfg. Co. 349
No. 34—Letter May 27, 1953, Ransburg to Remington Arms Co. 355
No. 35—Letter May 27, 1953, Ransburg to Frito Co. 356
No. 36—Letter July 17, 1953, Ransburg to General Electric Co. 357
No. 37—Letter May 27, 1953, Ransburg to Weatherhead Co. 358
No. 38—Letter May 28, 1953, Ransburg to Rheem Mfg. Co. 359
No. 39—Letter May 27, 1953, Ransburg to Public Service 360
No. 40—Letter May 28, 1953, Ransburg to C. A. Olson Mfg. Co. 361

PLAINTIFF'S EXHIBITS.

YY—Memo to Distributors dated May 27, 1953..... 362
ZZ-1—Ransburg Atom Spray Process Agreement dated 3-21-49..... 446
ZZ-10—General Electric Co. Agreement dated Mar. 12, 1956, S. N. 6087..... 364
ZZ-12—Pemco Corp., Agreement dated Aug. 21, 1956, S. N. 6366..... 371
IIII—Booklet entitled "Ransburg No. 2 Process"... 455
PPPP—Correspondence with Behr-Manning Corporation 378
QQQQ—Correspondence regarding Research Corporation 386
SSSS—Correspondence with Western Electric Company 387
UUUU—Booklet entitled "Ransburg No. 2 Process," Copyright 1956, 1957..... 389
OOOOO—Correspondence between Binks and Ford... 391
PPPPP—Correspondence between Binks and Ford... 409
VVVVV-1—"Ransburg No. 2 Process" Booklet..... 427

UNITED STATES LETTERS PATENT.

No. 2,097,233—A. F. Meston, March 31, 1934..... 467
No. 2,302,289—H. E. Bramston-Cook, dated Dec. 6, 1938 483
No. 2,334,648—H. P. Ransburg, et al., dated June 29, 1939..... 489
No. 2,808,343—C. C. Simmons, dated March 5, 1952... 497

	Original	Print
Proceedings in the United States Court of Appeals for the Seventh Circuit		
Appendix to brief for plaintiff-appellant, Volumes I and II, see separate indices		
Appendix to brief for defendant-appellee, Volume III, see separate index		
Record from the United States District Court for the Southern District of Indiana, Indianapolis Division	511	511
Excerpt of transcript of testimony of Emery P. Miller on redirect examination	512	511
Plaintiff's Exhibit IIIII—Judgment in the case of U.S. v. Minnesota Mining and Manufacturing Co. et al., C.A. 8119 filed in the U.S.D.C. for the District of Massachusetts, dated November 6, 1950	514	512
Plaintiff's Exhibit JJJJJ—United States Letters Patent	536	533

Number	*Issued*	*Title*		
RE20,660	Feb. 22, 1938	Method of Coating and Apparatus Therefor and Product	536	533
2027087	Jan. 7, 1936	Abrasive Sheet and Process of Making the Same	548	545
2027308	Jan. 7, 1936	Manufacture of Abrasive Articles	551	548
2027309	Jan. 7, 1936	Abrasive Material	554	551
2082182	June 1, 1937	Manufacture of Abrasive Articles	562	559
2245301	June 10, 1941	Manufacture of Abrasive Articles	565	562
2279361	April 14, 1942	Electrostatic Coating Process	569	566
2287837	June 30, 1942	Method and Apparatus for Applying Coating Materials	574	571
2318570	May 4, 1943	Manufacture of Abrasives	584	581
2318571	May 4, 1943	Manufacture of Abrasives	600	597
2328577	Sept. 7, 1943	Process and Apparatus for Grading and for Coating with Comminuted Materials	614	611
2376342	May 22, 1945	Manufacture of Abrasives	625	622

	Original	Print
Record from the United States District Court for the Southern District of Indiana, Indianapolis Division—Continued		
Defendant's Exhibit 5A (Excerpts)	637	634
Page 10 of Applicant's Amendment filed June 28, 1945	637	634
Pages 14 and 29 of Applicant's Board of Appeals Brief filed January 5, 1951	638	635
Defendant's Exhibit 5B (Excerpts)	640	637
Affidavit of Gilbert Isgrigg filed March 20, 1953	640	637
Affidavit of Donald C. Howarth filed March 20, 1953	643	640
Page 15 of Applicant's Board of Appeals Brief filed May 25, 1953	646	643
Page 5 of Board of Appeals decision dated December 18, 1953	647	644
Defendant's Exhibit 6 (Excerpt)	649	645
Amendment C, filed August 3, 1956	649	645
Defendant's Exhibit 21—United States Letters Patent	652	649
Number *Issued* *Title*		
1854071 April 12, 1932 Method of Manufacturing Abrasives	652	649
2047525 July 14, 1936 Insulating Method for Electrical and Thermo-Technical Purposes, and Apparatus for Accomplishing the Same	657	654
2087260 July 20, 1937 Homogenous Piled Surface	662	659
2152077 March 28, 1939 Production of Piled Surfaces in Pattern Form	666	663
2166385 July 18, 1939 Determining Electrical Characteristics	676	673
2173032 Sept. 12, 1939 Production of Pile Surfaced Materials	680	677
2173078 Sept. 12, 1939 Production of Piled Surfaces	690	687
2174328 Sept. 26, 1939 Piled Surface in Pattern Form	697	694
2217126 Oct. 8, 1940 Piled Surface in Pattern Form	702	699
2218445 Oct. 15, 1940 Production of Pile Surface Materials	711	708
2222539 Nov. 19, 1940 Method of and Apparatus for Making Pile Surfaced Sheets	715	712
2223476 Dec. 3, 1940 Method for Making Pile Fabrics	721	718

	Original	Print
Record from the United States District Court for the Southern District of Indiana, Indianapolis Division—Continued		
Defendant's Exhibit 21—United States Letters Patent—Continued		
Number *Issued* *Title*		
2231324 Feb. 11, 1941 Apparatus for and Method of Making Hat Bats	728	725
2248064 July 8, 1941 Coating, Particularly for Manufacture of Abrasives	732	729
2248853 July 8, 1941 Abrasive Article and Method of Making Same	748	745
2281558 May 5, 1942 Manufacture of Abrasive Articles and Apparatus Therefor	763	760
2356489 Aug. 22, 1944 Apparatus for Coating	774	771
2370636 March 6, 1945 Manufacture of Abrasives	787	784
2371605 March 20, 1945 Coating, Particularly for Manufacture of Abrasives	800	797
2376343 May 22, 1945 Manufacture of Abrasives	815	812
2376922 May 29, 1945 Method of and Apparatus for Making Pile Fabrics	824	821
2447374 Aug. 17, 1948 Method of Applying Coating Materials	833	830
Opinion, Castle, J.	841	838
Judgment	855	852
Clerk's certificate (omitted in printing)	856	852
Order allowing certiorari	857	853

APPENDIX.

EXHIBITS TO DEFENDANT'S ANSWER TO PLAINTIFF'S INTERROGATORY NO. 8.

Exhibit D-11.

Adopted May, 1953.

Serial No. .....

Ransburg Electrostatic Spray Process Agreement.

This agreement, entered into by and between Ransburg Electro-Coating Corp., an Indiana corporation, having its principal place of business at Indianapolis, Indiana, hereinafter called "Ransburg", and .....

.....

.....

hereinafter called "User," Witnesseth:

Whereas, Ransburg is the owner of, or otherwise has the right to grant licenses under, certain United States letters patent and inventions all pertaining to and covering methods and apparatus used in the electrostatic coating of articles, the process so used being referred to as "said Process," has acquired much engineering data and experience pertaining to said Process, is conducting research in that field, has performed a substantial amount of engineering in adapting said Process to commercial use, and has supplied User with the results of said engineering pertinent to User's production; and

Whereas, User desires to use said Process and benefit from Ransburg's engineering;

Now, therefore, it is mutually agreed as follows:

1. License: In consideration of the payment by User

of the fees herein provided, Ransburg hereby grants to User, subject to and in accordance with all of the terms and conditions of this agreement and while the same is in effect, a nonexclusive, nonassignable license to use said Process at User's plant in ....., with one unit as shown in Ransburg's Drawing No. ....., subject to such changes therein and such further specifications as Ransburg may prescribe, for electrostatically spraying .....,
but said license shall not include the use of said Process in the manufacture of abrasive articles, flock-coated articles, or articles coated with fiber-shaped particles.

2. Supervision: Ransburg or any of its agents or duly authorized representatives shall, without notice and at any time during User's regular business hours, have access to User's premises where said unit is installed for the purpose of determining the manner in and extent to which User is using said Process so that, to the extent Ransburg deems it desirable, Ransburg may make engineering and/or operating recommendations.

3. Conversion: Upon written request of User and upon terms to be agreeable to both parties, Ransburg will license the use of said Process otherwise than as described in Paragraph 1 unless, in Ransburg's opinion, the requested use involves unsafe practices or impractical conditions or is in conflict with the policies or commitments of Ransburg. Such conversion shall be made only after Ransburg has agreed thereto in writing.

4. Liability: User agrees that Ransburg shall not be liable to User for any loss, cost, expense, or damage arising from any failure of said Process to function in any particular manner or to electrostatically coat any particular article or assembly, or for any claim resulting from the use, operation, or condition of the electrostatic unit with which said Process is used. User further agrees to reim-

burse Ransburg for any loss, cost, expense or damage which may be sustained as a result of any liability to third parties for any claim resulting from the use, operation, or condition of the electrostatic unit with which said Process is used.

5. Performance: The performance of the obligations of both parties hereunder is subject to strikes and lockouts, whether in the organization of either party or elsewhere, and to accidents, fires, delays in manufacture or transportation, acts of God, embargoes, or any governmental action, as well as any causes for postponement or non performance over which the parties have no control; and any failure, due to any of such causes, of either party to perform any of its obligations herein set forth shall not be considered a violation of this agreement.

6. Termination: User shall have the right to terminate this agreement at any time upon thirty days' written notice to Ransburg, provided User has fulfilled its obligations hereunder. Ransburg shall have the right to terminate this agreement at any time after three years from the date of Ransburg's acceptance hereof upon six months' written notice to User.

In the event User shall fail to perform any of the conditions or obligations of this agreement, and such failure shall continue or recur after written notice thereof from Ransburg, Ransburg may (without prejudice to its right to recover any amounts owing by User as herein provided or any damages for breach of this agreement) terminate this agreement forthwith. Any delay, concession, or indulgence on the part of Ransburg in enforcing any of its rights on any default shall not be deemed a waiver of such rights.

7. Fees: User agrees to pay to Ransburg an initial fee of .....
within thirty days after the date of acceptance of this agreement by Ransburg. User further agrees to pay Rans-

burg, on or before the tenth day of each calendar month during the life of this agreement.

Monthly fees under this agreement shall start on the date User begins to use said Process under this agreement or thirty days after the date of acceptance of this agreement by Ransburg, whichever occurs earlier, and the first payment shall be made on or before the tenth day of the calendar month following. For the first and last payments of monthly fees under this agreement, the basic minimum monthly fees shall be prorated according to the portion of the month for which it is payable.

In addition to the above fees, User agrees to pay or to reimburse Ransburg if it should be obliged to pay, directly or indirectly, any taxes, licenses, or fees imposed by the laws of any State, of any political subdivision, of any municipality, or of any other governmental authority by reason of the use or operation of said Process or the license granted under this agreement. Such sums as may be due under this provision shall be paid separately or added to the invoice for other payments as the law may require or as Ransburg may determine.

During the term of this agreement, the basic minimum monthly fee specified above shall from time to time be adjusted commensurately with changes, from the value for May 15, 1950, in the Revised Consumer Price Index, Large Cities Combined, as determined by the Bureau of Labor Statistics of the U. S. Department of Labor on the 1947-49 base; provided, however, that only a change of at least ten percentage points in the value of said Index shall require any such adjustment.

User agrees to keep permanent books of account from which the correctness of the monthly payments made under this agreement can be verified and agrees that such books of account shall be open to inspection by Ransburg or its duly authorized representatives at any time during User's regular business hours.

8. Execution of Agreement: This agreement sets forth the entire agreement and understanding between the parties as to the subject matter of this agreement, and no statements, conditions, or representations, either oral or written, made by the parties, their employees, or agents, including conditions or provisions appearing in any purchase order or other instrument issued by User, shall be valid or binding unless contained in a written instrument signed by both parties. Ransburg makes no warranties of any kind, express or implied, except as set forth in this agreement.

All the rights and privileges of Ransburg hereunder shall be extended to and inure to the benefit of the successors in business or assigns of Ransburg upon User being given written notice of the assignment of this agreement to such successors in business or assigns and upon the written acceptance by such successors in business or assign of all Ranburg's obligations hereunder.

This agreement is submitted in quadruplicate for execution by User. It shall be become a contract only upon its execution and acceptance by Ransburg at Ransburg's home office, in Indianapolis, Indiana, and shall be effective under the laws of the State of Indiana.

In Witness Whereof, the parties have caused this agreement to be executed by an authorized officer or person effective as of the date of acceptance by Ransburg set forth below.

.....(User) Executed and accepted this..... day of

By ....., 195.....

(Title)

Ransburg Electro-Coating Corp. (Ransburg)

By .....

(Title)

Form No. 137.

Exhibit D-12.

Adopted May, 1953.

Serial No. .....

Ransburg Electrostatic Spray Process Agreement.

This agreement, entered into by and between Ransburg Electro-Coating Corp., an Indiana corporation, having its principal place of business at Indianapolis, Indiana, hereinafter called "Ransburg," and .....

.....

.....,

hereinafter called "User," Witnesseth:

Whereas, Ransburg is the owner of, or otherwise has the right to grant licenses under, certain United States letters patent and inventions all pertaining to and covering methods and apparatus used in the electrostatic coating of articles, the process so used being referred to as "said Process," has acquired much engineering data and experience pertaining to said Process, is conducting research in that field, has performed a substantial amount of engineering in adapting said Process to commercial use, has supplied User with the results of said engineering pertinent to User's production, and has designed special equipment therefor; and

Whereas, User desires to use said Process and benefit from Ransburg's engineering and requests that Ransburg furnish certain special equipment hereinbelow described;

Now, therefore, it is mutually agreed as follows:

1. License: In consideration of the payment by User of the fees herein provided, Ransburg hereby grants to User, subject to and in accordance with all of the terms and conditions of this agreement and while the same is in

effect, a nonexclusive, nonassignable license to use said Process at User's plant in _____, with one unit as shown in Ransburg's drawing No. _____, subject to such changes therein and such further specifications as Ransburg may prescribe, for electrostatically spraying _____, but said license shall not include the right to use said Process in the manufacture of abrasive articles, flock-coated articles, or articles coated with fiber-shaped particles.

2. Equipment: Ransburg will furnish User, for its use of said Process, one voltage pack and electrical controls, electrodes and insulating supports therefor, and high voltage lead-in means, which will be shipped prepaid to User's aforesaid plant upon request of User. As parts of Ransburg's equipment become defective, User agrees to return prepaid all such defective parts to Ransburg promptly. Ransburg will furnish replacements, without charge, of any such defective parts which become defective as a result of ordinary wear and tear from proper use and operation, provided such parts are returned to Ransburg within thirty days after they become defective. If said defective parts become defective from improper use, operation, or negligence of User or if said defective parts are not returned to Ransburg within said thirty-day period, User agrees to pay Ransburg, Ransburg's standard charges for furnishing replacements for said defective parts. The furnishing of equipment and replacements by Ransburg is subject to the availability to Ransburg of the necessary component parts of the equipment and replacements and to prior shipment commitments of Ransburg. User shall furnish all labor, materials, and equipment necessary for the use of said Process except the equipment to be furnished by Ransburg in accordance with this paragraph.

3. Supervision: Ransburg will furnish supervision nec-

essary for placing its equipment in readiness for operation. Should Ransburg's supervisor make more than one trip to the plant of User or be delayed there for any cause not chargeable to Ransburg, then for each day of such trip or trips or of such delay, User shall pay Ransburg the sum of Seventy-five Dollars and any necessary transportation expenses incurred thereby.

4. Conversion: Ransburg will grant, upon written request by User, a license to use said Process otherwise than as described in Paragraph 1 unless, in Ransburg's opinion, the requested use involves unsafe practices or impractical conditions or is in conflict with the policies or commitments of Ransburg. Such conversion shall be made only after Ransburg has agreed thereto in writing.

5. Patent Infringement Indemnification: Ransburg agrees to indemnify User (but not in an amount in excess of the total fees paid pursuant to Paragraph 11 hereof) against any liability for infringement of letters patent by said Process if used in accordance with the terms and provisions hereof and to undertake at its expense the defense of any suit brought against User for such infringement, provided User shall promptly notify Ransburg of any such claim of infringement, permit Ransburg to assume the defense thereof, and cooperate with Ransburg in respect thereto and in respect to any necessary changes of equipment or use thereof.

6. Liability: User agrees that Ransburg shall not be liable to User for any loss, cost, expense, or damage arising from any failure of said Process or equipment to function in any particular manner or to electrostatically spray any particular article or assembly, or for any claim (other than as provided in Paragraph 5) resulting from the use, operation, or condition of the equipment furnished by Ransburg while said equipment is in the possession or custody of User. User further agrees to reimburse Ransburg for

any loss, cost, expense, or damage which may be sustained as a result of any liability to third parties for any claim (other than as provided in Paragraph 5) resulting from the use, operation, or condition of the equipment furnished by Ransburg while said equipment is in the possession or custody of User.

Exhibit D-12, Page 2.

Adopted May, 1953.

7. Use of Equipment: User agrees to follow Ransburg's safety and operating recommendations and to maintain Ransburg's equipment in as good condition as when installed, ordinary wear and tear from proper use and operation alone excepted. User agrees that it shall not use or operate Ransburg's equipment with any of the parts or safety devices removed and to reimburse Ransburg for loss of or damage to Ransburg's equipment while in User's possession or custody, ordinary wear and tear from proper use and operation alone excepted.

8. Performance: The performance of the obligations of both parties hereunder is subject to strikes and lockouts, whether in the organization of either party or elsewhere, and to accidents, fires, delays in manufacture or transportation, acts of God, embargoes or any governmental action, as well as any causes for postponement or non-performance over which the parties have no control; and any failure, due to any of such causes, of either party to perform any of its obligations herein set forth shall not be considered a violation of this agreement.

9. Title: Title to all equipment furnished by Ransburg shall at all times remain in Ransburg and said equipment shall remain personal property regardless of how it is affixed to the realty. Ransburg shall have at all times,

during business hours, the right to enter User's premises for the purpose of determining whether its equipment and said Process are being used as herein provided. User shall not have the right, without the written consent of Ransburg, to (1) lease or grant the right to use the equipment furnished by Ransburg to any person, firm, or corporation, (2) remove it from the plant to which it is delivered for installation, or (3) use it for any purpose or in any manner other than as herein provided. Upon termination of this agreement, User agrees to deliver the equipment furnished by Ransburg, freight prepaid, to Ransburg at Indianapolis, Indiana, in as good condition as when installed, ordinary wear and tear incident to its proper use and operation alone excepted.

10. Termination: User shall have the right to terminate this agreement at any time upon thirty days' written notice to Ransburg, provided User has fulfilled its obligations hereunder and returns Ransburg's equipment to Ransburg, prepaid within thirty days after such notification in as good condition as when installed, ordinary wear and tear from proper use and operation alone excepted. Ransburg shall have the right to terminate this agreement at any time after three years from the date of Ransburg's acceptance hereof upon six months' written notice to User.

In the event User shall fail to perform any of the conditions or obligations of this agreement, and such failure shall continue or recur after written notice thereof from Ransburg, Ransburg may (without prejudice to its right to recover any amounts owing by User as herein provided or any damages for breach of this agreement) terminate this agreement and take possession of its equipment forthwith, and for that purpose permission is hereby given Ransburg or any of its agents to enter any premises where-

in its equipment is located, to discover and take possession of its equipment without notice and without being liable to any suit, action, indictment, or other proceedings by User or anyone claiming under it. Any delay, concession, or indulgence on the part of Ransburg in enforcing any of its rights on any default shall not be deemed a waiver of such rights.

11. Fees: User agrees to pay to Ransburg an initial fee of .....

.....

within sixty days after date of shipment of Ransburg's equipment or thirty days after date of installation thereof, whichever occurs earlier. User further agrees to pay to Ransburg, on or before the tenth day of each calendar month during the life of this agreement, a basic minimum monthly fee of One Hundred Dollars ($100.00), which fee is due in any event, and in addition thereto a monthly fee based on the cost to User of the coating material (including all its ingredients) used in said unit during the preceding calendar month in accordance with the following schedule:

Monthly Cost of Coating Material	Monthly Fee
Less than $4,000.00	10% of Cost
$4,000.00 to $8,000.00	$400.00 plus 5% of Cost over $4,000.00
In Excess of $8,000.00	600.00

Exhibit D-12, Page 3.

Adopted May, 1953.

Monthly fees under this agreement shall start with the date of installation of Ransburg's equipment or thirty days after the date of shipment thereof from Ransburg's plant, whichever occurs earlier, and the first payment shall be

made on or before the tenth day of the calendar month following. For the first and last payments of monthly fees under this agreement, the basic minimum monthly fee specified above shall be prorated according to the portion of the month for which it is payable.

In addition to the above fees, User agrees to pay, or to reimburse Ransburg if it should be obliged to pay, directly or indirectly, any taxes, licenses, or fees imposed by the laws of any State, of any political subdivision, of any municipality, or of any other governmental authority by reason of the installation, possession, use, or location of any equipment furnished by Ransburg pursuant to this agreement. Such sums as may be due under this provision shall be paid separately or added to the invoice for other payments as the law may require or as Ransburg may determine.

If User does not request shipment of Ransburg's equipment prior to the expiration of six months after the date of Ransburg's acceptance of this agreement, Ransburg shall have the right, prior to shipment of its equipment, to change the fees and conditions of this agreement to conform to its policy as of the date of such shipment.

During the term of this agreement, the basic minimum monthly fee specified above, the sums set forth in the above columns entitled "Monthly Cost of Coating Material" and "Monthly Fee," and the sum set forth in Paragraph 3 shall from time to time be adjusted commensurately with changes, from the value for May 15, 1950, in the Consumer Price Index, Large Cities Combined, as determined by the Bureau of Labor Statistics of the U. S. Department of Labor, on the 1947-49 base; provided, however, that only a change of at least ten percentage points in the value of said Index shall require any such adjustment.

Upon request of Ransburg, User shall supply Ransburg with a written report showing the monthly quantity of coating material used in said unit and the cost to User of said coating material. User agrees to keep permanent books of account from which the correctness of said written reports can be verified and agrees that such books of account from which the correctness of said written reports can be verified and agrees that such books of account shall be open to inspection by Ransburg or its duly authorized representatives at any time during User's regular business hours.

12. Execution of Agreement: This agreement sets forth the entire agreement and understanding between the parties as to the subject matter of this agreement, and no statements, conditions, or representations, either oral or written, made by the parties, their employees, or agents, including conditions or provisions appearing in any purchase order or other instrument issued by User, shall be valid or binding unless contained in a written instrument signed by both parties. Ransburg makes no warranties of any kind, express or implied, except as set forth in this agreement.

All the rights and privileges of Ransbury hereunder shall be extended to and inure to the benefit of the successors in business or assigns of Ransburg upon User being given written notice of the assignment of this agreement to such successors in business or assigns and upon the written acceptance by such successors in business or assigns of all Ransburg's obligation hereunder.

This agreement is submitted in quadruplicate for execution by User. It shall become a contract only upon its execution and acceptance by Ransburg at Ransburg's home office in Indianapolis, Indiana, and shall be effective under the laws of the State of Indiana.

In Witness Whereof, the parties ~~have~~ caused this agreement to be executed by an authorized officer or person effective as of the date of acceptance by Ransburg set forth below.

.....(User)

By.....

(Title)

Executed and accepted this.....day of

....., 195....

Ransburg Electro-Coating Corp. (Ransburg)

By.....

(Title)

Form No. 138.

Exhibit D-22.

Adopted July 1956.

Ransburg.

No. .....

Electrostatic Spray Process Agreement.

User: .....

Plant: ..... Units: ..... Drawing No. .....

Items: .....

Ransburg Electro-Coating Corp., of Indianapolis, Indiana (herein called Ransburg), which owns patents and inventions for electrostatically depositing liquid particles with the use of compressed air, herein called "the Process," and has done and is doing extensive engineering and research on the Process; and the above User, which desires to use the Process and engineering, agree that:

1. License. During the term and subject to the provisions hereof, Ransburg grants User a non-exclusive license to use the Process at User's plant, with the number of units, in accordance with the drawing made a part hereof (subject to such changes in procedure and specifications as Ransburg may from time to time designate) for coating the items, all as set forth above.

2. Use and Supervision. User will use the Process in accordance with Ransburg's safety and operating recommendations, and will not make any use thereof except as herein provided. Ransburg's duly authorized representatives shall have the right to enter User's premises during business hours to determine the manner in and extent to

which User is using the Process and, to the extent Ransburg deems it desirable, Ransburg may make engineering and or operating recommendations.

3. Fees. User will pay Ransburg at Indianapolis, Indiana: (1) An initial fee of $ ..... within 30 days after the acceptance of this agreement by Ransburg; and (2) For each calendar month during the term hereof, commencing the day User begins to use the Process or 30 days after acceptance of this agreement by Ransburg, whichever occurs earlier, a monthly fee comprising: a basic monthly fee of $80.00 payable in any event, but pro-rated for any partial initial calendar month; and an additional monthly fee based on the cost to User of the coating material (including all its ingredients) used in said unit(s) during said month according to the following schedule:

Monthly Cost of Coating Material	Monthly Fee
Less than $4,000.00	10% of Cost
$4,000 to $8,000	$400.00 plus 5% of Cost over $4,000.00
In Excess of $8,000.00	$600.00

At the request of either party the basic monthly fee from time to time shall be adjusted commensurate with changes of not less than ten points from the value for January, 1956 of the Consumer Price Index, Large Cities Combined, All Items, of the Bureau of Labor Statistics of the U. S. Department of Labor, on the 1947-1949 base, or any successor thereto.

User will keep and make available for Ransburg's inspection during business hours permanent records of all information required for computing monthly fees. Within 10 days following each calendar month User will furnish to Ransburg a written report containing all information for computing the fee for that month, with User's computation and payment of the fee.

4. Liability. Ransburg shall not be liable to User for damages resulting from the installation, servicing, or use of the Process. User indemnifies Ransburg against all claims of others for any damages resulting from the installation, servicing or use of the Process. Ransburg makes no warranty, express or implied, relative to the Process.

5. Term. This agreement shall be in effect from the date of acceptance by Ransburg until terminated as follows: (1) User may terminate as of the end of any calendar month, upon 30 days' written notice to Ransburg; (2) Ransburg may terminate as of any date after three years from the acceptance date hereof, upon six months' written notice to User; or (3) Ransburg may terminate forthwith should User become insolvent or bankrupt or should any breach or default by User remain uncured for 20 days after written notice thereof from Ransburg.

This written agreement constitutes the entire agreement between the parties, and no terms or understandings not herein contained (whether included in any purchase order or otherwise) shall be valid or binding unless contained in a writing signed by both parties. This agreement shall be governed by the law of Indiana.

Signed by User on....., 195....

Accepted by Ransburg on....., 195....

.....(User)

Ransburg Electro-Coating Corp.

By.....

(Title)

By.....

(Title)

Exhibit D-30.

Adopted April, 1954.

Serial No. .....

Ransburg Electro-Spray Agreement.

This agreement, entered into by and between Ransburg Electro-Coating Corp., an Indiana corporation, having its principal place of business at Indianapolis, Indiana, hereinafter called "Ransburg," and .....

.....

.....,

hereinafter called "User," Witnesseth:

Whereas, Ransburg is the owner of, or otherwise has the right to grant licenses under, certain inventions, United States letters patent, or patent applications pertaining to and covering methods and apparatus used in electrostatically depositing liquid spray particles formed by airless atomization (without the use of compressed air), the process so used being hereinafter referred to as "said Process," has acquired much engineering data and experience pertaining to said Process, is conducting research in that field, has performed a substantial amount of engineering in adapting said Process to commercial use, and has supplied User with the results of said engineering pertinent to User's production; and

Whereas, User desires to use said Process and benefit from Ransburg's engineering:

Now, therefore, it is mutually agreed as follows:

1. License: In consideration of the payment by User of the fees herein provided, Ransburg hereby grants to User, subject to and in accordance with all of the terms and conditions of this agreement and while the same is in effect,

a nonexclusive, nonassignable license to use said Process at User's plant in ....., with one unit as shown in Ransburg's Drawing No. ....., subject to such changes therein and such further specifications as Ransburg may prescribe, for electrostatically coating .....

2. Supervision: Ransburg or any of its agents or duly authorized representatives shall, without notice and at any time during User's regular business hours, have access to User's premises where said unit is installed for the purpose of determining the manner in and extent to which User is using said Process so that, to the extent Ransburg deems it desirable, Ransburg may make engineering and/or operating recommendations.

3. Conversion: Upon written request of User and upon terms to be agreeable to both parties, Ransburg will license the use of said Process otherwise than as described in Paragraph 1 unless, in Ransburg's opinion, the requested use involves unsafe practices or impractical conditions or is in conflict with the policies or commitments of Ransburg. Such conversions shall be made only after Ransburg has agreed thereto in writing.

4. Liability: User agrees that Ransburg shall not be liable to User for any loss, cost, expense, or damage arising from any failure of said Process to function in any particular manner, or to electrostatically coat any particular article or assembly, or for any claim resulting from the use, operation, or condition of the electrostatic unit with which said Process is used. User further agrees to reimburse Ransburg for any loss, cost, expense, or damage which may be sustained as a result of any liability to third parties for any claim resulting from the use, operation, or condition of the electrostatic unit with which said Process is used.

5. Performance: The performance of the obligations of both parties hereunder is subject to strikes and lockouts, whether in the organization of either party or elsewhere, and to accidents, fires, delays in manufacture or transportation, acts of God, embargoes, or any governmental action, as well as any causes for postponement or non-performance over which the parties have no control; and any failure due to any of such causes, of either party to perform any of its obligations herein set forth shall not be considered a violation of this agreement.

6. Termination: User shall have the right to terminate this agreement at any time upon thirty days' written notice to Ransburg, provided User has fulfilled its obligations hereunder. Ransburg shall have the right to terminate this agreement at any time after three years from the date of Ransburg's acceptance hereof upon six months' written notice to User.

In the event User shall fail to perform any of the conditions or obligations of this agreement, and such failure shall continue or recur after written notice thereof from Ransburg, Ransburg may (without prejudice to its rights to recover any amounts owing by User as herein provided or any damages for breach of this agreement) terminate this agreement forthwith. Any delay, concession, or indulgence on the part of Ransburg in enforcing any of its rights on any default shall not be deemed a waiver of such rights.

7. Fees: User agrees to pay to Ransburg an initial fee of .....

.....

within thirty days after the date of acceptance of this agreement by Ransburg. User further agrees to pay Ransburg, on or before the tenth day of each calendar month during the life of this agreement,

Monthly fees under this agreement shall start on the

date User begins to use said Process under this agreement or thirty days after the date of acceptance of this agreement by Ransburg whichever occurs earlier, and the first payment shall be made on or before the tenth day of the calendar month following. For the first and last payments of monthly fees under this agreement, the basic minimum monthly fee shall be prorated according to the portion of the month for which it is payable.

In addition to the above fees, User agrees to pay or to reimburse Ransburg if it should be obliged to pay, directly or indirectly, any taxes, licenses, or fees imposed by the laws of any State, of any political subdivision, of any municipality, or of any other governmental authority by reason of the use or operation of said Process or the license granted under this agreement. Such sums as may be due under this provision shall be paid separately or added to the invoice for other payments as the law may require or as Ransburg may determine.

During the term of this agreement, the basic minimum monthly fee specified above shall from time to time be adjusted commensurately with changes, from the value for May 15, 1950, in the Revised Consumer Price Index, Large Cities Combined, as determined by the Bureau of Labor Statistics of the U. S. Department of Labor, on the 1947-49 base; provided, however, that only a change of at least ten percentage points in the value of said Index shall require any such adjustment.

User agrees to keep permanent books of account from which the correctness of the monthly payments made under this agreement can be verified and agrees that such books of account shall be open to inspection by Ransburg or its duly authorized representatives at any time during User's regular business hours.

8. Future Inventions: User agrees that in the event User acquires, from any source, any inventions, improve-

ments, or letters patent, domestic or foreign, pertaining to methods and/or apparatus for electrostatically depositing liquid spray particles formed by airless atomization (without the use of compressed air), Ransburg shall have with respect to coating methods and apparatus employing said inventions, improvements, and the subject matter of said letters patent, a royalty-free, nonexclusive, assignable license, with right to sublicense, such license to be irrevocable except upon voluntary surrender by Ransburg. Patents subject to Ransburg's rights under this paragraph shall include only patents acquired by User during the term of this agreement, patents acquired by User within two years following termination of this agreement, and patents whenever acquired by User which cover inventions and improvements made within the term of this agreement or within two years following its termination.

9. Execution of Agreement: This agreement sets forth the entire agreement and understanding between the parties as to the subject matter of this agreement, and no statements, conditions, or representations, either oral or written, made by the parties, their employees, or agents, including conditions or provisions appearing in any purchase order or other instrument issued by User, shall be valid or binding unless contained in a written instrument signed by both parties. Ransburg makes no warranties of any kind, express or implied, except as set forth in this agreement.

All the rights and privileges of Ransburg hereunder shall be extended to and inure to the benefit of the successors in business or assigns of Ransburg upon User being given written notice of the assignment of this agreement to such successors in business or assigns and upon the written acceptance by such successors in business or asigns of all Ransburg's obligations hereunder.

This agreement is submitted in quadruplicate for execution by User. It shall become a contract only upon its

execution and acceptance by Ransburg at Ransburg's home office in Indianapolis, Indiana, and shall be effective under the laws of the State of Indiana.

In Witness Whereof, the parties have caused this agreement to be executed by an authorized officer or person effective as of the date of acceptance by Ransburg set forth below.

.....(User)

By.....

(Title)

Executed and accepted this.....day of .....,195....

Ransburg Electro-Coating Corp. (Ransburg)

By.....

(Title)

Exhibit D-32.

Adopted Jan. 1955.

Ransburg.

Serial No. .....

Electro-Spray Agreement.

This agreement, entered into by and between Ransburg Electro-Coating Corp., an Indiana corporation, having its principal place of business at Indianapolis, Indiana, hereinafter called "Ransburg," and

.....

.....

hereinafter called "User," Witnesseth:

Whereas, Ransburg is the owner of, or otherwise has the right to grant licenses under, certain United States letters patent and inventions pertaining to and covering methods and apparatus used in electrostatically depositing liquid spray particles formed by airless atomization (without the use of compressed air), the process so used being hereinafter referred to as "said Process," has acquired much engineering data and experience pertaining to said Process, is conducting research in that field, has performed a substantial amount of engineering in adapting said Process to commercial use, has supplied User with results of said engineering pertinent to User's production, and has designed special equipment therefor; and

Whereas, User desires to use said Process and benefit from Ransburg's engineering and requests that Ransburg furnish certain special equipment hereinbelow described;

Now, therefore, it is mutually agreed as follows:

1. License: In consideration of the payment by User

of the fees herein provided, Ransburg hereby grants to User, subject to and in accordance with all of the terms and conditions of this agreement and while the same is in effect, a nonexclusive, nonassignable license to use said Process at User's plant in ....., with ..... as shown in Ransburg's Drawing No. ....., subject to such changes therein and such further specifications as Ransburg may prescribe, for electrostatically coating .....

.....

2. Equipment and Supervision: Ransburg will furnish User, for its use of said Process, high voltage, atomizing, and liquid supply apparatus and electrical controls therefor and such other equipment as Ransburg deems desirable, which will be shipped prepaid to User's aforesaid plant upon request of User. As parts of Ransburg's equipment become defective, User agrees to return prepaid to Ransburg promptly all such defective parts. Ransburg will furnish replacements, without charge, of any such defective parts which become defective as a result of ordinary wear and tear from proper use and operation, provided such parts are returned to Ransburg within thirty days after they become defective. If defective parts become defective from improper use, operation, or negligence of User or if defective parts are not returned to Ransburg within said thirty-day period, User agrees to pay Ransburg Ransburg's standard charges for furnishing replacements for defective parts.

Ransburg will furnish supervision necessary for placing its equipment in readiness for operation. Should Ransburg's supervisor make more than one trip to the plant of User or be delayed there for any cause not chargeable to Ransburg, then for each day of such trip or trips or of such delay, User shall pay Ransburg the sum of Seventy-five

Dollars and any necessary transportation expenses incurred thereby.

User shall furnish all labor, materials, and equipment necessary for the use of said Process except the equipment and supervision to be furnished by Ransburg in accordance with this paragraph.

The furnishing of equipment, replacements, and supervision by Ransburg is subject to the availability to Ransburg of the necessary component parts of the equipment and replacements, to prior shipment commitments of Ransburg, to strikes and lockouts, whether in the organization of Ransburg or elsewhere, and to accidents, fires, delays in manufacture or transportation, acts of God, court injunctions, or any governmental action, as well as any causes for postponement or non-performance over which Ransburg has no control; and any failure, due to any of such causes, of Ransburg to perform any of its obligations herein set forth shall not be considered a breach of this agreement.

3. Title and Use of Equipment: Title to all equipment furnished by Ransburg including replacements shall at all times remain in Ransburg, and said equipment shall remain personal property regardless of how it is affixed to the realty. Ransburg shall have at all times, during business hours, the right to enter User's premises for the purpose of determining whether its equipment and said Process are being used as herein provided. User shall not have the right, without the written consent of Ransburg, to (1) lease or grant the right to use the equipment furnished by Ransburg to any person, firm, or corporation, (2) remove it from the plant to which it is delivered for installation, or (3) use it for any purpose or in any manner other than as herein provided.

User agrees that it shall not use or operate Ransburg's equipment with any of the parts or safety devices removed, that it shall follow Ransburg's safety and operating recom-

mendations, and that it shall maintain Ransburg's equipment in as good condition as when installed, ordinary wear and tear from proper use and operation alone excepted.

4. Liability: User agrees that Ransburg shall not be liable to User for any loss, cost, expense, or damage resulting from any failure of said Process or equipment to function in any particular manner or to electrostatically coat any particular article or assembly or resulting from the installing, servicing, adjusting, presence, use, operation or condition of Ransburg's equipment or resulting from any act or omission of Ransburg's employees or agents while on the premises of User. Also, User agrees to indemnify Ransburg for any loss, cost, expense, or damage Ransburg may sustain because of any claims by third parties resulting from the installing, servicing, adjusting, presence, use, operation or condition of Ransburg's equipment or resulting from any act or omission of Ransburg's employees or agents while on the premises of User. User shall be liable to Ransburg for any loss of, or damage to, Ransburg's equipment occurring at any time that such equipment is in the possession of User or any of its agents, ordinary wear and tear from proper use and operation alone excepted.

5. Termination: User shall have the right to terminate this agreement at any time upon thirty days' written notice to Ransburg, provided User has fulfilled its obligations hereunder including the return of Ransburg's equipment. Ransburg shall have the right to terminate this agreement at any time after three years from the date of Ransburg's acceptance hereof upon six months' written notice to User.

In the event User shall fail to perform any of the conditions or obligations of this agreement, and such failure shall continue or recur after written notice thereof from Ransburg, Ransburg may (without prejudice to its rights to recover any amounts owing by User as herein provided

or any damages for breach of this agreement) terminate this agreement and take possession of its equipment forthwith, and for that purpose permission is hereby given Ransburg or any of its agents to enter any premises wherein its equipment is located to discover and take possession of its equipment without notice and without being liable to any suit, action, indictment, or other proceedings by User or anyone claiming under it. Any delay, concession, or indulgence on the part of Ransburg in enforcing any of its rights on any default shall not be deemed a waiver of such rights.

After notice of termination of this agreement, User agrees to deliver the equipment furnished by Ransburg, to Ransburg at Indianapolis, Indiana, freight prepaid, in as good condition as when installed, ordinary wear and tear incident to its proper use and operation alone excepted.

6. Fees: User agrees to pay to Ransburg an initial fee of .....

.....

within sixty days after date of shipment of Ransburg's equipment or thirty days after date of installation thereof, whichever occurs earlier. In the event User has not requested shipment of Ransburg's equipment prior to the termination of this agreement or within six months of the date of Ransburg's acceptance of this agreement, whichever is earlier, one-half of the initial fee shall become due and payable forthwith, and the balance of it shall be due and payable as provided hereinabove. For each calendar month during which this agreement is in effect, User also agrees to pay to Ransburg a monthly fee.

The first period for which a monthly fee is payable shall commence with the date of installation of Ransburg's equipment, or thirty days after the date of shipment thereof by Ransburg whichever occurs earlier. With respect to any

fractional calendar month for which a monthly fee is payable, the basic minimum monthly fee shall be prorated according to the portion of the month for which it is payable. Within ten days after the end of each calendar month for which a monthly fee is payable, User will furnish to Ransburg upon forms furnished by Ransburg, or, in the absence thereof, upon any reasonably adequate form, a written report setting forth in reasonable detail the information upon which the aforesaid monthly fee may be computed and shall pay to Ransburg at its office at Indianapolis, Indiana, the monthly fee payable for said month. User agrees to keep permanent books of account from which the correctness of said written reports can be verified and agrees that such books of account shall be open to inspection by Ransburg or its duly authorized representatives at any time during User's regular business hours.

In addition to the above fees, User agrees to pay, or to reimburse Ransburg if it should be obliged to pay, directly or indirectly, any taxes, licenses, or fees imposed by the laws of any State, of any political subdivision, of any municipality, or of any other governmental authority by reason of the installation, possession, use, or location of any equipment furnished by Ransburg or by reason of the furnishing of any services by Ransburg pursuant to this agreement. Such sums as may be due under this provision shall be paid separately or added to the invoice for other payments as the law may require or as Ransburg may determine.

If User does not request shipment of Ransburg's equipment prior to the expiration of six months after the date of Ransburg's acceptance of this agreement, Ransburg shall have the right, prior to shipment of its equipment, to change the fees and conditions of this agreement to conform to its policy as of the date of such shipment.

During the term of this agreement, the basic minimum monthly fee specified above and the sum set forth in Paragraph 2 may from time to time be adjusted commensurately with changes, from the value for November, 1950, in the Consumer Price Index, Large Cities Combined, All Items, as determined by the Bureau of Labor Statistics of the U. S. Department of Labor, on the 1947-49 base, or any successor thereto; provided, however, no such adjustment shall be made unless a change of at least ten percentage points has occurred in said Index prior to each such adjustment.

7. Execution of Agreement: This agreement sets forth the entire agreement and understanding between the parties as to the subject matter of this agreement, and no statements, conditions, or representations, either oral or written, made by the parties, their employees, or agents, including conditions or provisions appearing in any purchase order or other instrument issued by User, shall be valid or binding unless contained in a written instrument signed by both parties. Ransburg makes no warranties of any kind, express or implied, except as set forth in this agreement.

All the rights and privileges of Ransburg hereunder shall be extended to and inure to the benefit of the successors in business or assigns of Ransburg upon User being given written notice of the assignment of this agreement to such successors in business or assigns and upon the written acceptance by such successors in business or assigns of all Ransburg's obligations hereunder.

This agreement consisting of three pages is submitted in quadruplicate for execution by User. It shall become a contract only upon its execution and acceptance by Ransburg at Ransburg's home office in Indianapolis, Indiana, and shall be effective under the laws of the State of Indiana.

In Witness Whereof, the parties have caused this agreement to be executed by an authorized officer or person effective as of the date of acceptance by Ransburg set forth below.

Executed and accepted by Ransburg this ..... day of ....., 195..

Ransburg Electro-Coating Corp. (Ransburg)

By .....

(Title)

..... (User)

By .....

(Title)

Exhibit D-33.

Adopted March 1955.

Ransburg

Serial No. .....

Electro-Spray Agreement

This agreement, entered into by and between Ransburg Electro-Coating Corp., an Indiana corporation, having its principal place of business at Indianapolis, Indiana, hereinafter called "Ransburg," and .....

.....

.....

hereinafter called "User," Witnesseth:

Whereas, Ransburg is the owner of, or otherwise has the right to grant licenses under, certain United States letters patent and inventions pertaining to and covering methods and apparatus used in electrostatically deposit-

ing liquid spray particles formed by airless atomization (without the use of compressed air), the process so used being hereinafter referred to as "said Process," has acquired much engineering data and experience pertaining to said Process, is conducting research in that field, has performed a substantial amount of engineering in adapting said Process to commercial use, and has supplied User with results of said engineering pertinent to User's production; and

Whereas, User desires to use said Process and benefit from Ransburg's engineering;

Now, therefore, it is mutually agreed as follows:

1. License: In consideration of the payment by User of the fees herein provided, Ransburg hereby grants to User, subject to and in accordance with all of the terms and conditions of this agreement and while the same is in effect, a nonexclusive, nonassignable license to use said Process at User's plant in ....., with ..... as shown in Ransburg's Drawing No. ..... subject to such changes therein and such further specifications as Ransburg may prescribe, for electrostatically spraying .....

.....

2. Supervision: Ransburg or any of its agents or duly authorized representatives shall have access, without notice and at any time during User's regular business hours, to User's premises where said unit or units are installed for the purpose of determining the manner in and extent to which User is using said Process so that, to the extent Ransburg deems it desirable, Ransburg may make engineering and/or operating recommendations.

3. Liability: User agrees that Ransburg shall not be liable to User for any loss, cost, expense, or damage result-

ing from any failure of said Process to function in any particular manner or to electrostatically coat any particular article or assembly or resulting from the presence, use, operation or condition of the electrostatic unit or units with which said Process is used or resulting from any act or omission of Ransburg's employees or agents while on the premises of User. Also, User agrees to indemnify Ransburg for any loss, cost, expense, or damage Ransburg may sustain because of any claims by third parties resulting from the presence, use, operation or condition of the electrostatic unit or units with which said Process is used or resulting from any act or omission of Ransburg's employees or agent while on the premises of User.

4. Termination: User shall have the right to terminate this agreement at any time upon thirty days' written notice to Ransburg, provided User has fulfilled its obligations hereunder. Ransburg shall have the right to terminate this agreement at any time after three years from the date of Ransburg's acceptance hereof upon six months' written notice to User.

In the event User shall fail to perform any of the conditions or obligations of this agreement, and such failure shall continue or recur after written notice thereof from Ransburg, Ransburg may (without prejudice to its rights to recover any amounts owing by User as herein provided or by any damages for breach of this agreement) terminate this agreement forwith. Any delay, concession, or indulgence on the part of Ransburg in enforcing any of its rights on any default shall not be deemed a waiver of such rights.

5. Fees: User agrees to pay to Ransburg an initial fee of ..... within thirty days after date of acceptance of this agreement by Ransburg. For each calendar month during which this agreement is in effect, User also agrees to pay to Ransburg a monthly fee

The first period for which a monthly fee is payable shall commence on the date User begins to use said Process under this agreement or thirty days after its acceptance by Ransburg, whichever occurs earlier. With respect to any fractional calendar month for which a monthly fee is payable, the basic minimum monthly fee shall be prorated according to the portion of the month for which it is payable. Within ten days after the end of each calendar month for which a monthly fee is payable, User will furnish to Ransburg upon forms furnished by Ransburg, or, in the absence thereof, upon any reasonably adequate form, a written report setting forth in reasonable detail the information upon which the aforesaid monthly fee may be computed and shall pay to Ransburg at its office at Indianapolis, Indiana, the monthly fee payable for said month. User agrees to keep permanent books of account from which the correctness of said written reports can be verified and agrees that such books of account shall be open to inspection by Ransburg or its duly authorized representatives at any time during User's regular business hours.

In addition to the above fees, User agrees to pay or to reimburse Ransburg if it should be obliged to pay, directly or indirectly, any taxes, licenses, or fees imposed by the laws of any State, of any political subdivision, of any municipality, or of any other governmental authority by reason of the use or operation of said Process or the license granted under this agreement. Such sums as may be due under this provision shall be paid separately or added to the invoice for other payments as the law may require or as Ransburg may determine.

During the term of this agreement, the basic minimum monthly fee specified above may from time to time be

adjusted commensurately with changes, from the value for November, 1950, in the Consumer Price Index, Large Cities Combined, All Items, as determined by the Bureau of Labor Statistics of the U. S. Department of Labor, on the 1947-49 base, or any successor thereto; provided, however, no such adjustment shall be made unless a change of at least ten percentage points has occurred in said Index prior to each such adjustment.

6. Execution of Agreement: This agreement sets forth the entire agreement and understanding between the parties as to the subject matter of this agreement, and no statements, conditions, or representations, either oral or written, made by the parties, their employees, or agents, including conditions or provisions appearing in any purchase order or other instrument issued by User, shall be valid or binding unless contained in a written instrument signed by both parties. Ransburg makes no warranties of any kind, express or implied, except as set forth in this agreement.

All the rights and privileges of Ransburg hereunder shall be extended to and inure to the benefit of the successors in business or assigns of Ransburg upon User being given written notice of the assignment of this agreement to such successors in business or assigns and upon the written acceptance by such successors in business or assigns of all Ransburg's obligations hereunder.

This agreement consisting of two pages is submitted in quadruplicate for execution by User. It shall become a contract only upon its execution and acceptance by Ransburg at Ransburg's home office in Indianalopis, Indiana, and shall be effective under the laws of the State of Indiana.

In Witness Whereof, the parties have caused this agreement to be executed by an authorized officer or person effective as of the date of acceptance by Ransburg set forth below.

Executed and accepted by Ransburg this ..... day of ....., 195....

.....(User)

By .....

(Title)

Ransburg Electro-Coating Corp.
(Ransburg)

By .....

(Title)

Exhibit D-36.

Adopted May, 1956.

Ransburg

Electro-Spray Agreement.

User: .....

Plant: ..... Units: ..... Drawing No. .....

Items: .....

Ransburg Electro-Coating Corp., of Indianapolis, Indiana (herein called Ransburg), which owns patents and inventions for electrostatically depositing airlessly atomized (without compressed air) liquid spray particles, herein called "the Process," has done and is doing extensive engineering and research on the Process, and has designed special equipment therefor; and the above User desires to use the Process, engineering and equipment, agree that:

1. License.

During the term and subject to the provisions hereof, Ransburg grants User a non-exclusive license to use the Process at User's plant, with the number of units, in accordance with Ransburg's drawing made a part hereof (subject to such changes in equipment, procedure, and specifications as Ransburg may from time to time designate) for coating the items, all as set forth above.

2. Equipment and Supervision.

At the time requested by User, Ransburg will slip prepaid to the above plant, for use of the Process, high voltage, atomizing, liquid supply and electrical control equipment, and will furnish expert supervision for in-

stalling and placing it in operation. If Ransburg's supervision is required to make more than one trip to User's plant or is there delayed for any reason not chargeable to Ransburg, User will pay Ransburg $75.00 for each day of such extra trip or delay, plus transportation expenses incurred. User shall furnish all other labor, materials and equipment for the installation and use of the Process.

Ransburg will furnish replacements for any defective parts of its equipment at the expense of (1) Ransburg, if the part becomes defective through ordinary wear and tear from proper use and if it is returned prepaid within 30 days after becoming defective, or (2) User, as Ransburg's applicable standard replacement charge, if it becomes defective through improper use or negligence of User, or is not returned within said 30 day period.

Ransburg's obligation to furnish equipment, supervision and replacement parts is subject to availability of the equipment and parts, to prior commitments, fires, strikes, acts of God, governmental decrees or actions, and any other cause beyond Ransburg's control, postponing or preventing performance.

3. Fees.

User will pay Ransburg at Indianapolis, Indiana: (1) An initial fee of $..... sixty days after shipment of Ransburg's Equipment to User, or 30 days after its installation, whichever period expires earlier; and (2) For each calendar month during the term hereof, commencing upon completion of installation of the equipment or on the thirtieth day following shipment thereof, whichever occurs earlier, a monthly fee (pro-rated for any partial initial calendar month) equal to

At the request of either party the minimum monthly fee from time to time shall be adjusted commensurate with changes of not less than ten points from the value for January, 1956 of the Consumer Price Index, Large Cities Combined, All items, of the Bureau of Labor Statistics of the U. S. Department of Labor, on the 1947-1949 base, or any successor thereto.

User will keep and make available for Ransburg's inspection during business hours permanent records of all information required for computing monthly fees. Within 10 days following each calendar month User will furnish to Ransburg a written report containing all information for computing the fee for that month, with User's computation and payment of the fee.

If shipment of the equipment is requested by User more than one year after Ransburg's acceptance of this agreement, Ransburg shall have the right to change the fees and terms of this agreement in conformity with its policy at that time.

4. Title and Use of Equipment.

All equipment furnished by Ransburg shall remain its personal property and in User's possession until returned to Ransburg as herein provided. User will pay Ransburg for any loss, or damage to, Ransburg's equipment while in the possession of User or its agents and upon termination of this agreement will at its expense promptly deliver the equipment, freight prepaid, to Ransburg at Indianapolis, Indiana, in as good condition as when received, except only for ordinary wear and tear from proper use.

User will pay, or reimburse Ransburg for, any taxes or fees imposed by any governmental authority by reason of the installation, possession, use, or location

of any equipment or services furnished by Ransburg hereunder.

User will use the equipment and the Process in accordance with Ransburg's safety and operating recommendations, and will not make any use thereof except as herein provided. Ransburg shall have the right to enter User's premises during business hours to inspect the condition and use of the equipment.

5. Liability.

Ransburg shall not be liable to User for damages resulting from the installation, servicing, presence, use, or condition of Ransburg's equipment at User's plant. User indemnifies Ransburg against all claims of others for any damages resulting from the installation, servicing, presence, use, or condition of Ransburg's equipment at User's plant. Ransburg makes no warranty, express or implied, relative to the Process or equipment.

6. Term.

This agreement shall be in effect from the date of acceptance by Ransburg until terminated as follows: (1) User may terminate as of the end of any calendar month or as of the date of return of Ransburg's equipment, whichever is later, upon 30 days' written notice to Ransburg; (2) Ransburg may terminate as of any date after three years from the acceptance date hereof, upon six months' written notice to User; or (3) Ransburg may terminate forwith should User become insolvent or bankrupt or should any breach or default by User remain uncured for 20 days after written notice thereof from Ransburg, and in any such case Ransburg may enter User's premises and repossess its equipment without it or its authorized represen-

tatives incurring any liability for trespass or other causes and without prejudice to its rights to recover amounts owing it hereunder or damages for breach of this agreement.

This written agreement constitutes the entire agreement between the parties, and no terms or understandings not herein contained (whether included in any purchase order or otherwise) shall be valid or binding unless contained in a writing signed by both parties. This agreement shall be governed by the law of Indiana.

Signed by User on ....., 195....

.....
(User)

By .....
(Title)

Ransburg Electro-Coating Corp.

Accepted by Ransburg on ....., 195....

By .....
(Title)

Exhibit D-38.

Adopted Aug. 1956.

Ransburg

No.

Electro-Spray Agreement.

User:
Plant: Units: Drawing No.
Items:

Ransburg Electro-Coating Corp., of Indianapolis, Indiana (herein called Ransburg), which owns patents and inventions for electrostatically depositing airlessly atomized (without compressed air) liquid spray particles, herein called "the Process," and has done and is doing extensive engineering and research on the Process; and the above User, which desires to use the Process and engineering, agree that:

1. License

During the term and subject to the provisions hereof, Ransburg grants User a non-exclusive license to use the Process at User's plant, with the number of units, in accordance with the drawing made a part hereof, for coating the items, all as set forth above.

2. Use and Supervision

User will use the Process in accordance with adequate safety and operating procedures, and will not make any use thereof except as herein provided. Ransburg's duly authorized representatives shall have the right to enter User's premises during business hours to determine the manner in and extent to which

User is using the Process and, to the extent Ransburg deems it desirable, Ransburg may make engineering and/or operating recommendations.

3. Fees

User will pay Ransburg at Indianapolis, Indiana: (1) An initial fee of $..... within 30 days after the acceptance of this agreement by Ransburg; and (2) For each calendar month during the term hereof a monthly fee (pro-rated for any partial initial calendar month) equal to

At the request of either party the minimum monthly fee from time to time shall be adjusted commensurate with changes of not less than ten points from the value for January, 1956 of the Consumer Price Index, Large Cities Combined, All items, of the Bureau of Labor Statistics of the U. S. Department of Labor; on the 1947-1949 base, or any successor thereto.

User will keep and make available for Ransburg's inspection during business hours permanent records of all information required for computing monthly fees. Within 10 days following each calendar month User will furnish to Ransburg a written report containing all information for computing the fee for that month, with User's computation and payment of the fee.

4. Liability

Ransburg shall not be liable to User for damages resulting from the installation, servicing or use of the Process. User indemnifies Ransburg against all claims of others for any damages resulting from the installation, servicing or use of the Process. Ransburg makes no warranty, express or implied, relative to the Process.

5. Term

This agreement shall be in effect from the date of acceptance by Ransburg until terminated as follows: (1) User may terminate as of the end of any calendar month, upon 30 days' written notice to Ransburg; (2) Ransburg may terminate as of any date after three years from the acceptance date hereof, upon six months' written notice to User; or (3) Ransburg may terminate forthwith should User become insolvent or bankrupt or should any breach or default by User remain uncured for 20 days after written notice thereof from Ransburg.

This written agreement constitutes the entire agreement between the parties, and no terms or understandings not herein contained (whether included in any purchase order or otherwise) shall be valid or binding unless contained in a writing signed by both parties. This agreement shall be governed by the law of Indiana.

Signed by User on ....., 195 .

.....
(User)

By .....
(Title)

Accepted by Ransburg on ....., 195 .

Ransburg Electro-Coating Corp.

By .....
(Title)

UNITED STATES DISTRICT COURT,
(Caption—56-C-262.)

DEFENDANT'S INTERROGATORIES AND PLAINTIFF'S ANSWERS.

Defendant's Interrogatories to the Plaintiff	Plaintiff's Answers to Defendant's Interrogatories
• • • • •	• • • • •
27. Has the Plaintiff entered the field of marketing of a system for coating articles by a process utilizing compressed air spray guns and an electrostatic field for effecting deposition of the coating material?	27. Yes, to the extent of one sale in 1958.
28. If the answer to Interrogatory No. 27 is in the affirmative, then state with respect to such equipment and the marketing thereof:	28.
(a) When such centry was first made.	(a) June, 1958.
(b) Whether any public announcements by trade articles, advertisements or otherwise have been made, and give the dates and identity of all such.	(b) The news of the introduction of Plaintiff's air type electrostatic system appeared in the following publications in the period to October 24, 1958: American Metal Market Paint Industry Magazine Plant Engineering Products Finishing New Equipment Digest Industrial Finishing Steel Industrial Distribution Mill and Factory Automation Metal Products Finishing Gasoline News Automotive Industries American Paint Journal American Machinist New York Journal of Commerce Advertisements for the new system have appeared in various magazines, and a copy of each such advertisement and a list of the magazines in which each has appeared is attached hereto as Exhibit 28b1, 28b2, and 28b3.

Defendant's Interrogatories to the Plaintiff	Plaintiff's Answers to Defendant's Interrogatories
(c) Whether any brochures or advertising folders have been prepared, and give the dates and identity of all such.	(c) Bulletins E-1 and EE-1 both published in June, 1958, attached hereto as Exhibits 28c 1 and 28c 2.
(d) Whether there are one or more types of such equipment offered by the Plaintiff and a description generally of the principal components of each type.	(d) Only one such type has been offered, the principal components consisting of a power pack, controls, spray gun, and electrical grids.
(e) How such equipment is offered or marketed, whether by lease, conditional or outright sale, and supply copies of all forms, if any, of such agreements.	(e) Outright sale. Plaintiff has no specialized forms for such sales, but employs its standard quotation form, a copy of which is attached as Exhibit 28e1.
(f) Whether Plaintiff has, or claims to have, patents, patent rights or patent applications upon all or any part of such equipment, and if so, identify such parts and the applicable patents or patent rights.	(f) No.
(g) Whether such equipment is offered as a complete operating unit, and if so, the price and other terms with respect to each type.	(g) If the customer desires a complete unit, it is sold as such at a fixed price depending on the size of the installation. To date, one such sale has been consummated at a price of $5620.
(h) Whether the components of such equipment are offered separately, and if so, the price and other terms with respect to each component.	(h) Yes. The price list for components is attached as Exhibit 28h1.
(i) Whether Plaintiff furnishes, or will furnish, any services to prospective customers.	(i) Yes.
(j) The nature price and other terms of any engineering services furnished or proposed to be furnished to customers.	(j) Installation services and repair services are to be furnished when requested by the purchaser, the price varying from sixty to seventy-five dollars per day, plus travel expenses.
(k) Whether Plaintiff will run tests at its plant on articles to be coated for prospective customers.	(k) Yes.
(l) Whether Plaintiff has made, or proposes to make, any recommendations to customers as to any types of coating materials to be used with such equipment, or as to solvents or other ingredients in such coating materials.	(l) Yes.

Defendant's Interrogatories to the Plaintiff	Plaintiff's Answers to Defendant's Interrogatories
(m) Whether Plaintiff has furnished, or proposes to furnish, any such equipment to paint manufacturers, and if so, upon what basis.	(m) No such equipment has been furnished to paint manufacturers, and no such proposals are presently under consideration.
(n) Whether the power pack utilized is of the Plaintiff's own design and manufacture or whether it is purchased. If purchased, state the name and location of the source and whether the power pack purchased has any commercial uses other than in electrostatic coating, and if so, name all such other uses.	(n) The power pack for the single consummated sale was purchased from H. G. Fischer Company of Franklin Park, Illinois. The power pack may be used wherever high voltage direct current is required, such as in X-ray machines, precipitrons, and the like.
(o) Whether any guaranty of the equipment or its performance is given or is proposed to be given, and whether such guaranty is in writing.	(o) Plaintiff employs its standard guarantee in its regular quotation form, attached as Exhibit 28e1.
(p) Whether replacement parts are available, or are to be made available, to the customer and the basis upon which such parts are available, or are to be made available.	(p) Replacement parts are available for outright sale.
(q) Whether replacement parts are available from any other source than Plaintiff, and if so, name the parts so available and the sources.	(q) Power packs — from electrical manufacturers such as H. G. Fischer Co., Valves—from valve manufacturers such as Imperial Brass Co. Hose—from hose manufacturers Cable—from cable manufacturers Spray guns—from other spray gun manufacturers such as De Vilbiss Regulators—from regulator manufacturers such as Norgren or De Vilbiss Grids—from hardware stores.
(r) The basis upon which replacements are made available, or are to be made available, to customers.	(r) An outright sale.
(s) Whether repair or maintenance service is furnished, or proposed to be furnished, to customers, and if so, the nature thereof and the charges and terms, if any.	(s) Such services are to be furnished if requested. See answer to 28 (j).
(t) Whether such equipment has been offered, or is to be offered, to any of the persons, firms or corporations shown on the lists of Defendant's customers supplied in answer to Plaintiff's interrogatories in this cause, and if so, to which ones.	(t) Such equipment will be offered to anyone desiring the same.
(u) Whether any such equipment has been sold, leased or placed in the hands of customers. If so, give the names and addresses of all such persons.	(u) One unit has been sold to Lu Van, Inc., of Belding, Michigan.

Defendant's Interrogatories to the Plaintiff	Plaintiff's Answers to Defendant's Interrogatories
(v) Whether any patent infringement indemnification is to be, or has been, given, and attach a copy of an indemnification agreement which is representative.	(v) No such indemnification has been given so far, although Plaintiff may give such an indemnification if called upon to do so in the future.
(w) Whether Plaintiff has procured, or attempted to procure, licenses under any patents of others covering all or any part of the equipment or process referred to in Interrogatory No. 27. If so, give the name and number of each such patent and state whether a license was obtained.	(w) The electrostatic equipment marketed has not been under any patent license.
• • • • • •	• • • • • •
33. Are there any other persons, firms or corporations in the United States, including Defendant, now marketing systems for coating articles by utilizing compressed air spray guns and an electrostatic field for effecting deposition of coating materials? If so, give name and location of each such and state approximately how long each has been so marketing such system.	33. Other than the Defendant, Plaintiff believes the following concerns have marketed systems for coating articles by utilizing compressed air spray guns and an electrostatic field: Ashdee Electrostatic Products, Inc. Homewood, Illinois Scientific Electric Co. Garfield, New Jersey Ionic Electrostatic Corp. Garfield, New Jersey H. G. Fischer Co. Franklin Park, Illinois Staticote Systems, Inc. Chicago, Illinois Plaintiff has no knowledge as to how long each of the above has been marketing such systems.
34. If the answer to Interrogatory No. 27 is in the affirmative, state whether Plaintiff regards the compressed air electrostatic spray painting process, for which its equipment is marketed, as in competition with the airless process for electrostatic spray painting.	34. Yes, to the extent that with some types of articles, both processes produce comparable results.
• • • • • •	• • • • • •
93. Did the Plaintiff at any time have a discussion with representatives of any one or more of the persons, firms or corporations named in answer to Interrogatory No. 33 relative to a possible acquisition by Plaintiff of the electrostatic spray painting equipment business of such firm. If so, give the name and location of all such and give the dates and substance of such discussions.	93. In about 1951, Plaintiff was approached by officials of Ashdee Electrostatic Products, Inc., because Ashdee was seeking financial assistance in the marketing of their air type electrostatic spray coating systems. These negotiations were persisted in by the personnel of Ashdee for about two years, but were terminated.
• • • • • •	• • • • • •

Defendant's Interrogatories to the Plaintiff	Plaintiff's Answers to Defendant's Interrogatories
113. What was the source and date of Plaintiff's first knowledge that such a thing existed as a method for painting or coating by the use of compressed air guns and an electrostatic field for effecting deposition of coating material?	113. Plaintiff's first knowledge of a method for painting by use of compressed air and an electrostatic field was attained in the late 1930's or early 1940's from knowledge of the system being marked by Defendant's predecessor.
114. What was the source and date of Plaintiff's first knowledge that such a thing existed as a method for painting or coating by an airless electrostatic process?	114. Plaintiff's first knowledge of such a method specifically applied to paint was obtained when Defendant first commercialized its "No. 2" system.
115. When did the Plaintiff first conduct any experiments using an electrostatic field in connection with a painting or coating process?	115. Such experiments were first carried out by the Plaintiff's personnel in about 1951.
• • • • • •	• • • • •
122. How many compressed air spray guns, usable for coating or painting, has the Plaintiff sold to customers in the United States in each of the years 1940 to 1958, inclusive?	122 and 123. Plaintiff does not have invoice records for all the years requested in this interrogatory; however for the years 1954 to 1958, the following figures for which plaintiff has invoices are supplied:
123. How many of the guns referred to in Interrogatory No. 122 were hand-operated guns and how many were automatic guns?	

Year	Guns	Automatic Guns
1954	50,663	3,725
1955	76,141	7,135
1956	82,361	6,624
1957	64,180	7,948
1958 (to Oct. 29)	44,845	2,254

• • • • • • • • • •

125. Does the Plaintiff know how many automatic compressed air spray gun systems for coating or painting operations the Plaintiff has sold to customers in the United States in any of the years 1940 to 1958? If so; state such total for each such year.	125.	Year	Number Sold
		1940	18
		1941	71
		1942	115
		1943	38
		1944	71
		1945	89
		1946	52
		1947	33
		1948	46
		1949	45
		1950	66
		1951	93
		1952	60
		1953	142
		1954	98
		1955	156
		1956	181
		1957	107
		1958—Ten (10) Months	118

• • • • • • • • • •

131. Would the following cover substantially all of the commercial methods used for the application of paint in industry to articles of	131. No.

Defendant's Interrogatories to the Plaintiff	Plaintiff's Answers to Defendant's Interrogatories
manufacture: (1) brushing, (2) dipping, (3) flow-coating, (4) roller-coating, (5) lithographing, (6) by compressed air hand gun without electrostatic deposition, (7) by compressed air automatic gun without electrostatic deposition, (8) by compressed air automatic gun and depositing by an electrostatic field and (9) by airless electrostatic spray coating?	
132. If the answer to Interrogatory No. 131 is in the negative, state what other method or methods have any substantial commercial use.	132. Atomization by hydraulic pressure.
• • • • •	• • • • •
136. Based upon Plaintiff's knowledge of the industrial coating field, state as to each of the methods referred to in Interrogatory No. 131 and the answer to Interrogatory No. 132, the methods with which such method is commercially competitive for coating or painting of any manufactured article.	136. The methods may all be competitive with each other, depending on the article, character of the coating, and volume.
137. Does the Plaintiff know of any articles which cannot be painted except by airless electrostatic spray painting.	137. No, if the character of coating and the economics are ignored.
• • • • •	• • • • •
165. With reference to the demonstration of Plaintiff's slotted disc emitter SK-661 conducted at Plaintiff's plant in the presence of personnel of the Defendant in December, 1956, state:	165.
(a) the outer diameter of the emitter;	(a) 4¼ inches
(b) the extent in inches of the slotted portion of the periphery of the emitter to which liquid coating material was delivered;	(b) about 4¼ inches
(c) the extent in degrees of arc of the slotted portion of the periphery of the emitter to which liquid coating material was delivered;	(c) 120 degrees
(d) the width in inches of the slot in the periphery of the emitter to which the liquid coating material was delivered;	(d) 0.007 inches
(e) the radius of curvature, if any, of the outer edge portion of each of the two members forming between them the slot in the emitter from which liquid coating material was delivered for atomization;	(e) the radius of peripheral curvature was 2⅛ in.
(f) the angle of incidence between the inner and outer surfaces of	(f) about 15 degrees

Defendant's Interrogatories to the Plaintiff	Plaintiff's Answers to Defendant's Interrogatories
each of the two members forming between them the slot in the emitter from which liquid coating material was delivered for atomization;	
(g) the closest distance between the emitter and an article being coated;	(g) about 15 inches
(h) the potential existing at the outer edge of the emitter:	(h) approximately 100,000 volts
(i) the potential of the article to be coated;	(i) ground potential
(j) the type, name of the manufacturer, and full specifications (including wave form) of the high voltage source connected to the emitter;	(j) full wave bridge type using high vacuum tube rectifiers; manufactured by H. G. Fischer Co.; rippled d.c. output from 0 to 110,000 volts; 110 volt, 60 cycle, single phase input.
(k) the type, name of the manufacturer, and specifications of the liquid coating material delivered to the emitter;	(k) Glidden Japalac, air dry enamel, No. 1217 Ultra-White
(l) whether or not liquid coating material was supplied at a controlled rate to an atomizing zone;	(l) No, at a controlled pressure
(m) the rate of flow of liquid coating material to the atomizing zone;	(m) 1¼ oz./minute/disk
(n) the viscosity of the liquid coating material delivered to the emitter;	(n) 23 seconds on a No. 2 Zahn cup
(o) the solvents used, if any, in thinning the liquid coating material to the viscosity indicated in the answer to (n);	(o) toluol
(p) whether or not the answers to Defendant's previous interrogatories to Plaintiff Nos. 2(a), (b), (d) and (f), 3, 4, 5 and 6 are equally applicable to this use of the emitter.	(p) yes.
• • • • •	• • • • •
195. When did the Plaintiff first learn of the existence of the agreement between Behr-Manning Corporation and the Defendant, dated September 26, 1944? State from whom such information was obtained and the officer or agent of the Plaintiff first obtaining such knowledge.	195. The Plaintiff first learned of the existence of the agreement between Behr-Manning Corporation and Defendant during the taking of depositions of some of Defendant's officers during September, 1957. Such knowledge was first obtained by the attorneys for Plaintiff.
196. Did the Plaintiff at any time ever endeavor to obtain from Behr-Manning Corporation rights under	196. No.

Defendant's Interrogatories to the Plaintiff	Plaintiff's Answers to Defendant's Interrogatories
any patents or patent applications listed in the Bohr-Manning agreement, dated September 26, 1944, with Defendant?	
• • • • •	• • • • •
198. When did the Plaintiff first learn of the existence of the agreement between Brush Development Company and the Defendant, dated May 3, 1943? State from whom such information was obtained and the officer or agent of the Plaintiff first obtaining such knowledge.	198. Plaintiff first learned of the existence of the agreement between The Brush Development Company and Defendant during the taking of depositions of some of the Defendant's officers during September 1957. Such information was first obtained by attorneys for the Plaintiff.
199. Did the Plaintiff at any time ever endeavor to obtain from Brush Development Company rights under the Gravley Patent, No. 2,359,476?	199. No.
• • • • •	• • • • •
201. When did the Plaintiff first learn of the existence of the agreement between Western Electric Company and the Defendant, dated April 7, 1943? State from whom such information was obtained and the officer or agent of the Plaintiff first obtaining such knowledge.	201. Plaintiff first learned of the existence of the agreement between Western Electric Company and Defendant during the taking of depositions of some of the Defendant's officers during September 1957. Such knowledge was first obtained by attorneys for the Plaintiff.
202. Did the Plaintiff at any time ever endeavor to obtain from Western Electric Company rights under the Pugh Patent, No. 1,855,869?	202. No.
• • • • •	• • • • •
204. When did the Plaintiff first learn of the existence of the agreement between Research Corporation and the Defendant, dated October 7, 1948? State from whom such information was obtained and the officer or agent of the Plaintiff first obtaining such knowledge.	204. Plaintiff first learned of the existence of the agreement between Research Corporation and the Defendant during the taking of depositions of some of the Defendant's officers during September 1957. Such information was first obtained by the attorneys for Plaintiff.
205. Did the Plaintiff at any time ever endeavor to obtain from Research Corporation rights under the Meston Patent, No. 2,097,233, or the Wintermute Patent, No. 2,221,338?	205. No.
• • • • •	• • • • •

DEFENDANT'S REQUEST FOR ADMISSIONS AND PLAINTIFF'S ANSWERS.

Defendant's Request for Admissions	Answers to Defendant's Requests for Admissions
1. Plaintiff is a Delaware corporation, with its principal place of business in the City of Chicago, Illinois; has been in business since 1892; sells a line of merchandise for industry under the slogan, "Everything for Spray Painting"; has branch offices or warehouses in twenty-eight major cities in the United States; and is one of the two largest merchandisers of spray painting equipment in the United States.	1. Admitted with the qualifications that during the past plaintiff's name was changed; its predecessors beginning in 1892, were Star Brass Works, and Binks Spraying Company up to 1929 when the present name was adopted; and secondly 3 of the 28 branch offices are in Canada.
• • • • •	• • • • •
3. Plaintiff first learned of electrostatic spray painting in November, 1942, when several of its representatives attended a demonstration at the laboratory of Defendant's predecessor, Harper J. Ransburg Co., at Indianapolis, Indiana.	3. Denied, except that plaintiff admits that in December 1942, at the invitation of Defendant, several of its representatives attended a demonstration of Ransburg's air-type No. 1 electrostatic coating system at Indianapolis, Indiana.
4. Plaintiff did not undertake any research or development in the field of electrostatic spray painting until January, 1951.	4. Denied, but plaintiff admits it first purchased a power pack in January 1951 in its efforts to develop an electrostatic spraying system but that previous thereto it had discussions of such system.
5. In 1952 Plaintiff attempted, but failed, to hire Harry Green and William A. Starkey, former employees of the Defendant, for the purpose of developing electrostatic spray painting equipment for the market.	5. Plaintiff admits that around 1952 Harry Green and William A. Starkey had unsuccessful negotiations with plaintiff for employment but denies that such negotiations were limited to the purpose stated.
• • • • •	• • • • •
7. Plaintiff's SK661 emitter was developed as a result of research in 1953 and 1954, and a drawing of said emitter was made and dated on May 12, 1954.	7. Admitted except that the research referred to was only part of the research, plaintiff having previous to 1953 also conducted research in the prior art and in development which culminated in the system making use of the SK-661 specific design of emitter.
8. Plaintiff learned of the existence of the Starkey process patent, No. 2,685,536, shortly after its issuance on August 3, 1954, and thereupon Plaintiff discontinued active research and development in the electrostatic spray painting field.	8. Admitted as to the airless electrostatic painting field but otherwise denied.
• • • • •	• • • • •
11. At the present time, systems for electrostatic spray painting with the use of compressed air guns or emitters are marketed by the following firms, in addition to Defendant:	11. (a) (b) (d) (e) (f) Plaintiff is not apprised of what the concerns mentioned are doing at the present time although it understands such concerns have or may have within the last several

Defendant's Request for Admissions	Answers to Defendant's Requests for Admissions
(a) H. G. Fischer and Company 9543 West Belmont Avenue Franklin Park, Illinois	years marketed compressed air gun electrostatic systems.
(b) Ashdee Electrostatic Products, Inc. Homewood, Illinois	
(c) Genco Equipment Company 14101 Prairie Avenue Detroit 38, Michigan	(c) Plaintiff has no knowledge of any such marketing by this concern.
(d) Ionic Electrostatic Corp. 105-119 Monroe Street Garfield, New Jersey	
(e) Scientific Electric Company 105-119 Monroe Street Garfield, New Jersey	
(f) Staticote Systems, Inc. 1373 South Layden Avenue Chicago 27, Illinois	
(g) Binks Manufacturing Company Chicago, Illinois	(g) Admitted only to the extent of one system installed in 1958.
• • • • •	• • • • • •
14. Plaintiff has never attempted, and is not now attempting, to engage in the business of selling or dealing in used equipment for electrostatic spray painting of the compressed air type.	14. Admitted as plaintiff has only very recently sold only one air-type electrostatic spraying system.
15. Plaintiff has never attempted, and is not now attempting, to engage in the business of selling or dealing in used equipment for electrostatic spray painting of the airless type.	15. Admitted as Plaintiff has never been successful in breaking into defendant's monopoly of the airless type of electrostatic coating market.
16. The only equipment which Plaintiff has attempted to market for airless electrostatic spray painting is its SK661 emitter and the equipment related thereto.	16. Admitted.
17. The only prospective vendee to which Plaintiff has attempted to sell or furnish airless electrostatic spray painting equipment is the Ford Motor Company.	17. Admitted.
18. Plaintiff has made no proposal for the sale or furnishing of its SK661 and related equipment to Ford Motor Company or to any other prospective vendee which was not subject to the express provision, in substance, that the prospective vendee indemnify Binks Manufacturing Company and hold it free and harmless against any and all suits or causes of action which might be brought against it for infringement and/or contributory in-	18. Admitted.

Defendant's Request for Admissions	Answers to Defendant's Requests for Admissions
fringement of the Starkey process patent, No. 2,685,536, by reason of manufacturing and furnishing to such vendee the devices comprising the subject matter of such proposal.	
. . . . .	. . . . .
22. Plaintiff did not know of the existence of the following until after the commencement of the instant action:	22. (a) (b) (c) (d) Admitted.
(a) Assignment to Harper J. Ransburg Co. from Western Electric Co., executed April 7, 1943.	
(b) Agreement of May 3, 1943, between Harper J. Ransburg Co. and Brush Development Co.	
(c) Agreement of September 26, 1944, between Harper J. Ransburg Co. and Behr-Manning Corporation.	
(d) Agreement of October 7, 1948, between Defendant and Research Corporation.	
23. With respect to the Pugh patent, No. 1,855,869, which Harper J. Ransburg Co. purchased from Western Electric Co. pursuant to an assignment executed April 7, 1943:	23.
(a) Said patent was upon an invention which did not relate to processes or apparatus for airless electrostatic spray painting.	(a) Denied and especially as said patent can be said to cover any invention.
(b) Said patent expired on April 26, 1949.	(b) Admitted.
(c) Plaintiff at no time has attempted to secure a license from anyone under said patent.	(c) Admitted.
(d) So far as Plaintiff knows, no one other than Plaintiff has attempted at any time since April 7, 1943, to secure a license under said patent to make and sell electrostatic spray painting equipment or installations.	(d) Plaintiff denies that it ever sought a license under this patent and has no knowledge of any one who sought a license for the purpose stated.
24. With respect to the Gravley patent, No. 2,359,476, which Harper J. Ransburg Co. acquired as a result of its agreement of May 3, 1943, with Brush Development Co:	24.
(a) Said patent was upon an invention for removing excess liquid coating material from articles, which did not relate to processes or apparatus for electrostatic spray painting.	(a) Denied and especially as said patent can be said to cover any invention.

Defendant's Request for Admissions	Answers to Defendant's Requests for Admissions
(b) Plaintiff at no time has attempted to secure license from anyone under said patent.	(b) Admitted.
(c) So far as Plaintiff knows, no one other than Plaintiff has attattempted at any time since May 3, 1943, to secure a license under said patent to make and sell electrostatic spray painting equipment or installations.	(c) Plaintiff denies that it ever sought a license under this patent and has no knowledge of any one who sought a license for the purpose stated.
25. With respect to the Meston patent, No. 2,097,233, under which Defendant obtained an exclusive license from Research Corporation, pursuant to an agreement dated October 7, 1948:	25.
(a) Said patent was upon an invention which did not relate to processes or apparatus for airless electrostatic spray painting.	(a) Denied and especially as said patent can be said to cover any invention.
(b) Said patent expired on October 26, 1954.	(b) Admitted.
(c) Plaintiff at no time has attempted to secure a license from anyone under said patent.	(c) Admitted.
(d) So far as Plaintiff knows, no one other than Plaintiff has attempted at any time since October 7, 1948, to secure a license under said patent to make and sell electrostatic spray painting equipment or installations.	(d) Plaintiff denies that it ever sought a license under this patent, and has no knowledge of any one who sought a license for the purpose stated.
26. With respect to the Wintermute patent No. 2,221,338, under which Defendant obtained an exclusive license from Research Corporation, pursuant to an agreement dated October 7, 1948:	26. (a) Denied and especially as said patent can be said to cover any invention.
(a) Said patent was upon an invention which did not relate to processes or apparatus for airless electrostatic spray painting.	
(b) Said patent expired on November 12, 1957.	(b) Admitted.
(c) Plaintiff at no time has attempted to secure a license from anyone under said patent.	(c) Admitted.
(d) So far as Plaintiff knows, no one other than Plaintiff has attempted at any time since October 7, 1948, to secure a license under said patent to make and sell electrostatic spray painting equipment or installations.	(d) Plaintiff denies that it ever sought a license under this patent, and has no knowledge of anyone who sought a license for the purpose stated.
27. The exclusive licenses obtained by Defendant from Research Corporation under the Meston patent, No. 2,097,233, and the Wintermute	27. Admitted with the following qualifications, while the license agreement speaks for itself and plaintiff does not have the originals

Defendant's Request for Admissions	Answers to Defendant's Requests for Admissions
patent, No. 2,221,388, pursuant to the agreement of October 7, 1948:	of the correspondence as to this agreement of defendant it would appear from copies of letters furnished by defendant to plaintiff,
(a) Were by the terms of said agreement convertible to non-exclusive licenses at the election of either party at any time after June 30, 1951, upon six months' notice.	(a) that the license was convertible as alleged, and
(b) Were converted to non-exclusive licenses by Defendant, upon notice given on May 26, 1954.	(b) that defendant apparently did notify Research Corporation that it was exercising its right to convert license to a non-exclusive one.
• • • • •	• • • • •
29. The assignment to Harper J. Ransburg Co. from Western Electric Company, executed April 7, 1943, did not prevent Plaintiff from manufacturing, selling or otherwise marketing installations for:	29. (a) (b) Denied and especially as plaintiff was without knowledge of such assignment until recently and long after the filing of this suit and hence the assignment itself did not influence either way plaintiff's marketing decisions.
(a) Air-type electrostatic spray painting.	
(b) Airless electrostatic spray painting.	
30. The agreement of May 3, 1943, between Harper J. Ransburg Co. and Brush Development Company, did not prevent Plaintiff from manufacturing, selling or otherwise marketing installations for:	30. Denied and especially as plaintiff was without knowledge of such agreement until recently and until long after the filing of this suit and hence such agreement in itself had nothing to do with any marketing decisions of plaintiff.
(a) Air-type electrostatic spray painting.	
(b) Airless electrostatic spray painting.	
31. The agreement of September 26, 1944, between Harper J. Ransburg Co. and Behr-Manning Corporation, did not prevent Plaintiff from manufacturing, selling or otherwise marketing installations for:	31. Denied and especially as plaintiff was without knowledge of such agreement until recently and long after the filing of this suit and hence such agreement in itself had nothing to do with any marketing decisions of plaintiff.
(a) Air-type electrostatic spray painting.	
(b) Airless electrostatic spray painting.	
32. The agreement of October 7, 1948, between the Defendant and Research Corporation, did not prevent Plaintiff from manufacturing, selling or otherwise marketing installations for:	32. Denied and especially as plaintiff was without knowledge of such agreement until recently and long after the filing of this suit and hence such agreement in itself had nothing to do with any marketing decision of plaintiff.
(a) Air-type electrostatic spray painting.	
(b) Airless electrostatic spray painting.	

PLAINTIFF'S EXHIBIT MMMM.

EMERY P MILLER, being first duly sworn to testify the truth, the whole truth and nothing but the truth relating to said cause, deposes and says:

Direct Examination, Questions by Mr. Charles F. Meroni.

Q. 1. Please state your name.

A. Emery Parker Miller.

Q. 2. Where do you reside?

A. 641 East 80th Street, Indianapolis.

Q. 3. How old are you, sir?

A. Forty-nine years old.

Q. 4. By whom are you at present employed?

A. Ransburg Electro-Coating Corporation.

Q. 5. Of Indianapolis?

A. That is correct, sir.

Q. 6. How long have you been employed by that company?

A. Since that company was formed.

Q. 7. You have any offhand recollection of the year? Or the approximate year?

A. Approximately 1948, something around there.

Q. 8. Were you employed also by the predecessor partnership?

A. I was.

Q. 9. And how long were you employed by that company?

A. I came to work for that organization continuously in July of 1943.

Q. 10. So that you have been with the Ransburgs since July of 1943 to the present time, is that correct?

A. That is correct.

Q. 11. By whom were you employed previously?

A. I was employed by Purdue University.

Q. 12. In what capacity?

A. I was assistant professor in the physics department.

Q. 13. And how long had you been so employed?

A. I had been employed as an assistant professor for three years. Prior to that time I had worked as an instructor and a graduate student for the University and went there in 1930.

Q. 14. As an instructor or student in 1930?

A. I went there as a student in 1930, graduate assistant, actually.

Q. 15. Had you finished your undergraduate work at that time?

A. Yes, sir, I had.

Q. 16. Where did you take your undergraduate work?

A. Lafayette College in Easton, Pennsylvania.

Q. 17. Did you receive a degree at the university?

A. I received my A.B. degree from there and also my Master's Degree.

Q. 18. In what field did you major?

A. I majored with economics with a minor in science.

Q. 19. Any particular field of science?

A. Physics.

Q. 20. And in your graduate work at the University of Purdue what did you major in?

A. Majored in physics also there.

Q. 21. And I understand you have a PhD.?

A. That is correct, sir.

Q. 22. And did you write your thesis in physics?

A. Yes.

Q. 23. In what particular field of physics?

A. In x-rays and crystal structure.

Q. 24. In the course of that work, both at the University of Purdue and previously in your work and study at Lafayette University—

A. (Interposing.) Lafayette College.

Q. 25. Did you have occasion to become familiar with electrostatic devices?

A. Yes, I did.

Q. 399. Who conducted tests of installations that you were going to make, in advance of making the installations?

A. The men in the laboratory conducted those.

Q. 400. Had you had anything to do with that?

A. I usually had supervision over some of those tests if they happened to fall under my direct jurisdiction.

Q. 401. Tell us what a typical test would amount to.

A. A typical laboratory test?

Q. 402. Yes, preliminary to setting up the monthly fee for an installation.

A. Well, preliminary to the customer coming to the plant, of course you had to incite his interest somehow, and once you had that to the point where he was convinced that we probably could do him some good, he was invited to the laboratory to actally see the process being used on his particular parts and was asked to send parts and his coating material to the laboratory and preliminary tests were run in advance of his coming to make sure that we were ready for his visit and to make sure of how we would handle the item, how it should be run and paint reduced to give the type of result that particular customer wanted, and then the customer was invited in and a demonstration was actually carried through for him in which samples, if he desired them, were prepared for him and he would take them back with him. Coating material was measured and mileage measurements were run through and we determined basically what requirements by way of physical set-up would be necessary to actually carry out his particular operation in his plant.

Q. 403. Now, these mileage ratings of paint run through

were used in determining what savings might be effected by a particular customer?

A. How many pieces a gallon that customer could expect to obtain with this.

Q. 404. Under conditions as set up in your shop?

A. Which approached his production operation as closely as possible. If they didn't he modified them so they did. That was the reason to have him in.

Q. 405. And your monthly fees were then calculated on the basis of possible saving that he might effect as determined by your tests at the plant?

A. Well, our monthly fee was a specific schedule. It was set out for a particular type item.

Q. 406. But it varied for each installation, did it not?

A. Not once the customer was determined and then the type of item this customer wanted to run.

Q. 407. But a particular item might be different from that set up for another item?

A. Yes, that is correct.

Q. 408. Depending upon how much savings can be effected in using your equipment?

A. Basically I suppose it would all go back to that, yes. We had a specific schedule whereby the shape of the item, the size of it, etc., had been worked out and given to us, which would in advance allow us to tell the man how much that particular item, what percentage of the paint used with our equipment would be asked as our fee from him.

Q. 409. Well, isn't it true that in many cases because of your background and experience you were able to make a much more efficient setup and operation at your plant that he would come in to see than he would have in his shop?

A. Certainly than he had in his shop, yes, because he did not have electrostatic methods generally available in his shop.

Q. 570. Now, in the scientific fields and in the coating fields with which you are familiar, when did you first observe a uni-directional high voltage electrostatic field being used to detear liquids?

A. To detear liquids?

Q. 571. Yes.

A. I first saw the operation in the Ransburg plant.

Q. 572. When, approximately?

A. Some time before 1940.

Q. 573. And what did you observe at that time?

A. I observed particles being removed, ink particles being removed from articles on a conveyor that had been dipped.

Q. 574. By an electrostatic process?

A. That is correct.

Q. 575. Did you ever see the detearing process commercially in the field?

A. At that time?

Q. 576. Or subsequent.

A. Subsequently I have, yes.

Q. 577. Approximately when did you first see the detearing process in the field? Commercially used.

A. I believe it was in 1943.

Q. 578. Do you personally recall the installation or where it was?

A. It was being used in the Ransburg plant.

Q. 579. For a commercial operation?

A. That is correct.

• • • • •

DR. EMERY P. MILLER, a witness called by the defendant, being first duly sworn, testified as follows:

Direct Examination.

* * * * * *

Q. When did you first start to work for the Ransburg Company, the Defendant in this case, or its predecessor?

A. 1938 I began to be associated with the Ransburg Electro-Coating Corporation on a consulting basis. I first came to work with them permanently in 1943.

Q. What was the nature of the consulting work that you did?

A. I worked with Harold Ransburg in connection with the initial investigation of the No. 1 electrostatic spraying process, particularly with regard to the development of the high voltage equipment.

Q. And for how long a period did that consulting work continue?

A. From 1938 until 1943.

Q. How extensive was your association with them in the consulting capacity?

A. It amounted to possibly a contact once a month until 1940 at which time I spent the entire summer here in Indianapolis with the organization and then from 1940 until 1943 there was periodic contacts with the Ransburg people.

Q. And you went with them permanently at what date?

A. July of 1943.

Q. And what was the nature of your work at that time when you first went with them?

A. I came with the organization as the Director of Research and Development.

Q. What were the duties of that particular position?

A. Basically to do and to direct the development of others in our organization and to do research myself.

Q. In what field was your research directed?

A. In the field generally related to electrostatic coating.

Q. Did you have anything to do with the research that led up to the development of the No. 1 System?

A. The No. 1 System was actually developed and I helped advance it, I'd say.

Q. Did you have occasion at that time to make a study of the state of the art generally as it existed in the commercial field with respect to electrostatic painting?

A. After I came with the organization, I did look into that art, yes, sir, and make myself acquainted with it.

Q. What was the situation with respect to whether or not there were competitive or there were any electrostatic painting systems available on the market at that time, 1943?

A. The only electrostatic painting process available on the market in 1943 was the Ransburg operation and method.

Q. And I think you mentioned that you had something to do with the designing of some of the equipment or looking into some of the equipment. Was that at the outset of your work?

A. When I came with the Ransburg organization, there was not available voltage equipment which was suitable from a safety standpoint for our work and I helped in the design and development of that particular device.

Q. What voltage equipment was available at that time?

A. At that time the voltage equipment which was available was either the static induction type of equipment, which has been referred to as the Wimhurst machine or there would have been available voltage supplies of the

tube and transformer type which were used generally in X-ray work or in dust or smoke precipitation work.

Q. In your statement that these weren't suitable, in what way were they not suitable?

A. This type of equipment was designed basically to produce high voltage at reasonably high currents; depending upon the use to which you are going to put that high voltage would determine exactly what the current output of those units would be. In the case of precipitation it might be in the neighborhood of four or five hundred milliamperes; or in the case of X-ray work it might be in the neighborhood of zero to a hundred milliamperes—generally in the high side of that range depending upon the tubes that you were using.

Q. What was done,—what was the first thing you did toward undertaking to secure adequate voltage equipment?

A. Well, realizing that there was no packs available which were generally safe,—at least that we felt were safe for our equipment—it was my job to design to the best of my ability such a pack. Because we had approached several people with regard to producing such equipment, and various factors influencing the picture, we were not able to get on the commercial market such equipment at that time. So I worked with Mr. Arthur Darling in the construction of four or five voltage packs for our particular use.

Q. Was such a pack designed?

A. Yes, sir.

Q. By you?

A. Yes, sir.

Q. Who is Mr. Darling?

A. Mr. Darling was a local electrician here in the City of Indianapolis who operated, I might say, a type of job shop operation with regard to electrical equipment. And

he was working with Harold Ransburg, and so we employed him to build these packs which we designed.

Q. You have used the word "pack." Would you explain what you mean by a pack?

A. Well, a voltage pack is a piece of equipment which is designed to produce voltages. It came about, I think, basically from the earlier radio work when originally battery sets were the vogue, and then people took vibrator type rectifiers and dry type rectifiers and combined them into a box which was used to replace batteries, and so they were sold on the market as packs, voltage packs. And the word—the connotation was carried over into the field to mean any type of voltage supply.

Q. Did you take any steps to secure packs of your design?

A. Yes, we went to General Electric Company in Schenectady to interest them in producing equipment for us either of our own design or of their design.

Q. What was the outcome?

A. At the time they advised us that the design would be considerably involved and it would take a matter of probably three or four months to get such equipment, which was a major obstacle, of course, to us at that time in our operation. And in addition the cost would be quite high for the volume or the quantity that we were interested in buying at that time. Obviously we were only interested in buying one or two, and when you take a firm like General Electric it probably might be a very minor order and the cost would have been prohibitive.

We also approached Westinghouse, RCA and General Electric, I might add—in addition to General Electric. Pardon me.

Q. Were there any other items that constituted a system of the type we have referred to as the No. 1 that you had in contemplation at that time which was not available on the market?

A. Yes, there were. The fluid regulation presented a problem to us because we were confronted with the idea of having very low fluid delivery, which means automatically with the methods that were available at that time that you had to have a very low air pressure on the paint supply source, and had to regulate that pressure very carefully. The ordinary regulators which were available on the market at that time for the pressure ranges of one, two or three or four pounds gave us fluctuations which we couldn't tolerate, so we were concerned also with the design of pressure regulators.

Q. The pressure regulators, do they have to do with the feeding of paint?

A. Yes, that would be the control of the air pressure which was placed on the supply in order to raise the fluid to the atomizing device.

Q. Were there any other parts of the system that were unavailable?

A Well, to the degree that you had a particular type of voltage supply, the electrical controls likewise would have been a new item, or an item which would necessarily have had to have been designed.

Q. What items in the system were available on the market at that time?

A. Well, spray guns were available at that time to the limited extent that spray guns could be marketed or could be purchased. This was during the war, of course, and things were all tight. The purchase of spray guns was on a six to eight months delivery with a—I have forgotten the initials now—but with a priority from the Government to purchase such equipment.

Actually even the purchase of copper wire was a detailed problem at that time.

Q. What was done by Ransburg with respect to acquir-

ing equipment for use in their No. 1 Systems to the extent that such equipment was available on the market?

A. Actually we, naturally, using spray guns with our equipment approached the various spray gun manufacturers with regard to obtaining that equipment; and to the extent that it was available, we actually purchased some of it or had our users purchase some of that equipment.

With regard to the fluid regulators, we purchased such fluid regulators and actually had tested them, I might say, and tried to use them in our equipment to the best of our ability.

In addition we went out on the market and purchased elements which were available that we could combine into a satisfactory air pressure regulator at these lower values.

Q. Who were the sources of supply of air guns at that time?

A. There was Binks, DeVilbiss and Pasche were the basic ones.

Q. And is that Binks that is a party in this suit that you refer to?

A. That is correct, sir.

Q. During your early association with Ransburg did you have occasion to become familiar with the conventional compressed air type of spray gun for painting?

A. I made it my business to become acquainted with such devices, yes, sir.

Q. Did you become familiar with the construction and the character of operating such guns?

A. I did, sir.

Q. Incidentally, from the period of 1938 to 1943 what was your position at Purdue University?

A. Beg pardon? I didn't get the last part.

Q. What was your position at the University? What was your job at Purdue University during the period of '38 to '43?

A. I was assistant professor in the Physics Department.

Q. Would you explain to the Court, please, the general nature of a compressed air gun for painting and describe briefly how it works and what effects the atomization of the paint?

A. I suppose generally you could classify such devices as two types basically, those which were arranged to be used by hand or manipulated by hand, and those which were arranged to be mounted in fixed position and operated by some sort of remote control device.

Basically the hand gun type consists of a pistol-type configuration arranged to be held in the hand and with a trigger that is actuated like an ordinary revolver. When the trigger is pulled back it allows coating material to flow from a supply or a hose into the gun; and generally in this type device that exits from a small orifice at the center front of the gun. About that orifice there is usually a slot or opening arrangement which is annular, and from that orifice there is an air flow allowed to pass when the trigger is pulled back simultaneously with the injection of the fluid. Sometimes by pure mechanics they cause a slight delay in the air flow, in the paint flow, so that you have a stream or jet of liquid exiting from the center of the device into an air stream which is annular in cross section.

The relative velocity of the air and the liquid causes that stream to be disrupted, just as wind blowing across the surface of the ocean causes waves, picks up spray, small particles; so here the air passing across the surface of the stream causes ripples or waves in that stream and picks up and breaks that paint up into small particles.

With that much of the device you would only have a round or annular shaped spray, obviously.

In order to make that spray adaptable to other shapes and devices there are what we refer to in the trade as horn

holes. In other words, the air cap itself is built so that displayed outwardly on a diameter or a radius from the center of the orifice there are other holes which are directed at an angle so that they now come in and impinge on this centrally formed spray, and their impingement causes the spray to go from a round cross section out into a shape which might be considered oval or elongated in one direction with respect to its axis; and those characteristics now are transferred generally to the automatic or the permanently mounted equipment, with the exception of the fact that such devices have an additional cylinder attached to the back of them,—usually an air-operated cylinder which is there for the purpose of doing in the fixed gun what the hand did in the other gun, namely, retract the valve which allows the paint and the air to flow through the device.

Q. Does your description that you have just given describe the activity of the compressed air gun that was demonstrated at the Ransburg plant for the Court yesterday?

A. That is correct, the first gun shown was a hand gun; and in the second demonstration it was an automatic gun.

Q. Did you have anything to do with conducting the demonstration that was given yesterday?

A. Yes, I did, sir.

Q. Under whose general supervision was that demonstration generally conducted?

A. It was conducted generally under my guidance and supervision.

Q. What is the condition of the spray produced by the compressed air gun such as is required for satisfactory painting of an article, that is, producing a satisfactory coating of an article with paint?

A. The condition of that spray would be that it is

spread out over a relatively large area and that the particles be of a correct size so that you obtain the coating that you are interested in obtaining.

Q. What do you mean by "spray coating"?

A. Obviously as you spray material or break it up into its components, you are going about the operation of increasing the exposed areas, the area which is exposed to the atmosphere. The smaller the particle gets, the larger the amount of the area exposed and that means greater the evaporation rate of the fluid that is intended to keep the particle wet. As you go to a very small particle, obviously this increases—this decrease in size causes increase in operation with the result of dryness or dusting of the spray. Obviously that is not a desirable feature because it ends up being rough on the surface.

Q. Now, what is the situation when you are using hand guns with respect to—I should say hand guns of compressed air gun with respect to the economies of the usage of paint spray?

A. That will depend considerably upon the object you are spraying. If you were to use a hand gun for spraying an object like a piece of cyclone fence or expanded metal, obviously the proportion of the open space to the proportion of the surface being coated enters the picture and you might get efficiencies that are only on the order of 10% perhaps.

Q. 10% meaning what?

A. 10% of the material that is leaving the bucket or container ends up as useful material on the object which you are spraying.

Q. What happens to the other 90%?

A. In the case of cyclone fence it is usually collected around the neighborhood on cars, and that sort of thing; but in the case of industrial operation, that would be col-

lected in devices scientifically designed to collect and get rid of the over-spray.

Q. What kind of devices are those?

A. They might be one of several types; might be what are referred to as generally spray booths, enclosures in which this operation is designed to take place, and they basically consist of an enclosure or a house or room which is ventilated by a suitable fan and duct work that goes to the outside. Now, obviously it does not do you any good if you collect it into the stack and pump it outside into the air, so you put some technique or mechanism in the booth to collect that over-spray and that might take the form at the present time as dry filters, pads of one type or another, glass wool, something of that nature, which are intended to mechanically interrupt the flow of this stream or might take the flow of a water curtain where you actually scrub or wash the air on the outside and take out of it the paint particles entrained or entrapped in the air stream.

Q. Now, you referred to an object being painted in the nature of a cyclone fence or other open object. What would be the situation with respect to objects of large surface in the nature of panels, for instance? What would be the economies in that respect?

A. In the case of a panel obviously the edge of a panel is not in any different circumstance than the cyclone fence. As the spray or the manipulation of the device moves, you —to the edge of the panel—you are going to get a percentage of over-spray, and in order to eliminate that edge paneling effect, it is generally accepted technique to actually shut the gun off as you come to the edge, trying to eliminate some of the blow-by or the over-spray. At the center of the panel you also have an effect which probably best could be described as a snow-drift type of action; in other words, air with paint particles in it comes in contact with a surface,

the air is going to turn and redirect itself and carry with it some of these particles, so you have what is known in the trade as bounce or—well, that is probably as good a name as any, bouncing of air streams with particles in it even though you are aiming at a continuous flat surface, that bounce, once it is redirected, never gets directed back to your surface pan. It is picked up in the exhaust stream and carried out as an over-spray also.

Q. Now, can you—

A. (Interposing.) In that case I might add the efficiency would probably come, might be—I know of one particular case where a well trained operator, it can obtain on a refrigerator-type surface, the side of a refrigerator can obtain 55 to 60 per cent efficiency. Normally it would fall below that because operators are not too careful and well trained.

Q. Taking into account the range of objects that are usually manufactured in industry that are painted by the compressed air type of gun, what would you say is the average utilization of paint as compared to the wastage of paint on the average for the whole group of objects?

Mr. Meroni: Your Honor, I object to that question. There is no foundation laid for this question to show this man is qualified to testify about the whole industry. He can testify as to about his own experiences but there is no evidence he has made any surveys in the field.

Mr. Hume: I will ask him—

Q. (By Mr. Hume.) Within the realm of your experience and knowledge and taking objects as types and running the gamut from the panel type to the most open type and averaging it out, what would be the—

Mr. Meroni: (Interposing.) I will withdraw the objection if he will limit his experience at his employment.

Q. (By Mr. Hume.) You may answer.

A. Obviously I have no way of telling what percentage

or I never ran a survey on what percentage of small items are sprayed in industry compared to large items; but to the extent that would enter the picture, I am quite certain the average efficiency obtained in industry at least to my experience with an air type gun is never much greater than on the average would be, say 35, 30%.

Q. Well, now I am going—

Mr. Hume: May I have the No. 1?

(The defendant, for purposes of identification, handed the Reporter a certain document for marking, and which was by said Reporter marked Defendant's Exhibit No. 7.)

Mr. Hume: Your Honor, I have just handed the witness a small copy of the chart that I am now putting on the easel, a copy of which the Court I think also has, with the idea the smaller one will be offered in evidence and the bigger one will be used just for illustrative discussion purposes in the Court.

Q. (By Mr. Hume.) And by referring to this chart I will first ask you, Dr. Miller, what this chart shows, if you know. What is it?

A. This chart is a typical No. 1 electrostatic spraying installation.

Q. Do you know anything about the origin of this particular drawing?

A. Yes. This drawing is reproduced from a service manual put out by Ransburg Electro-Coating Corporation for this type of equipment.

Q. Now, referring to Defendant's Exhibit 7, would you describe to the Court what is shown here and how it works?

The Court: Do you want to offer Exhibit 7 before we go on?

Mr. Hume: I will offer Exhibit 7 if your Honor please.

(Defendant's Exhibit No. 7 offered in evidence by Mr. Hume.)

The Court: Exhibit No. 7 is admitted and exhibited into evidence.

(DEFENDANT'S EXHIBIT NO. 7 is admitted and read into the evidence, and made a part of the record in this case, said exhibit being in the words and figures following, to-wit:)

(Here Insert.)

• • • • •

Q. How do the guns that are shown in this System compare with the guns that you have described as being compressed air guns that were utilized in the painting field prior to the introduction of the No. 1 System?

A. These are guns of the automatic type that I described, guns that are made to be positioned and then remotely operated.

Q. Are you familiar with the so-called No. 1 type of System that was first marketed by the Ransburg Company?

A. I am, sir.

Q. How does this representation of Exhibit 7 compare with the Systems that were marketed by Ransburg designated No. 1 System?

A. In essence they are the same, with the possible difference of the arrangement of the electrical controls and the air controls. Basically they are identical.

Q. Is there any difference in the basic operating principle?

A. The basic operating principle in this illustration and the one which was used originally by the Ransburg people is the same.

Q. Would you compare for us, please, the System illustrated in Exhibit 7 which you have just described and the demonstration that was made for the Court yesterday at the Ransburg Plant which was conducted second in the series?

A. This is essentially the same setup, although it differs from that setup in certain physical characteristics and physical arrangements. Actually the parts in that demonstration were carried from the other side. This might be considered to be a righthanded entry into the booth and into the field; whereas in the demonstration that we had at the plant yesterday the parts entered from the left side of the electrostatic field. The guns were on the opposite side of the conveyor under those circumstances. But basically, this is the general arrangement of the electrode and the parts on the conveyor. I believe in our demonstration the bottom electrode was not included.

Q. How does the source of power here, as represented in Exhibit 7 compare with the power packs that you stated that you did some designing on and that you secured from Mr. Darling, I think it was?

A. This pack essentially represents that piece of equipment that was designed at that time.

Q. Incidentally, how does this pack of your design compare with the earlier ones that you said were unsafe?

A. This particular piece of equipment as shown in this figure and as designed originally by myself for the Ransburg Corporation is what would be referred to as a single step transformer and tube arrangement. In other words, it is a simple arrangement to the extent that it involves only a secondary coil of the transformer and a tube which is intended to rectify that current. In other words, there is absolutely no electrical capacity which can create storage problems, electrical storage problems in this unit. And that is important in view of the fact that we are using here a piece of equipment that we want to put in a man's plant. The operator can walk around it, and it is highly important that there be very little electrical current available; because if it were available obviously contact with it might be lethal.

Now, it is part of our design problem to get rid of that distributed capacity, the electrical capacity, which would store up electrical energy; and when the output of this pack was contacted all of that stored energy would come out as a surge before the electrical characteristics of the unit could take over and bring about any control on the current that you would have initially. So our big problem in designing this was to design it safe. And we took the approach of a single transformer and tube arrangement without any capacities.

Now, you can do that where you need low currents. You can't do it very well where you need high voltages at reasonably high currents. There they take the approach that they incorporate into the unit—at least in the initial approaches with such equipment—transformers, condensers, electrical condensers as well as tubes—the condensers being put in intentionally to give you a ripple-free characteristic are put in there to carry you, so to speak, over the situation when you are not providing energy for the output. And such units, of course, are extremely hazardous. As a matter of fact, when Harold Ransburg first came to us at the University with his problems and one thing and another we did not have available at the University a pack which we felt was safe for his particular operation, because we were mainly interested in the X-ray type of equipment.

Q. Comment on whether or not this pack is safe or is not safe.

A. I can say that if this pack is not safe I personally would have been dead about 50 times because I have contacted it that many times myself. It is annoying but not lethal in any sense.

Q. Tell me whether or not the Ransburg Company are still marketing the No. 1 System?

A. Yes, they are, sir.

Q. Well, tell me how the System illustrated in Exhibit

7 compares with the present day System marketed by the Ransburg Company as the No. 1 System?

A. This illustration would essentially serve to illustrate a present piece of equipment that we would market.

Q. And how does the power pack in Exhibit 7 compare with the power pack of the present day No. 1 System of Ransburg?

A. This would be an adequate power pack for that type operation. It so happens that we have done further design and development and we now have another type of pack which we would generally use.

Q. Is the one you now use safe or unsafe?

A. I beg pardon?

Q. Is the one you now use safe or unsafe?

A. It is definitely safe.

* * * * *

Q. Does any overspray occur in the use of the system illustrated in Exhibit 7?

A. Yes, sir.

Q. Well, tell us about that and its extent, please.

A. The extent and amount of overspray which you'd experience with such a system obviously comes about due to the fact that the material is introduced into the field with a certain pneumatic or mechanical impulse. Each little particle is traveling with a definite velocity being urged on by the air stream in which it finds itself. Once in the field the particle becomes charged and is then urged toward the object on the conveyor. Now, if the urge of the electric field is not sufficiently large that it gets the particle over onto the object before its initial mechanical momentum carries it to the back of the field, obviously that particle is going to keep right on going into the exhaust curtain, and that would be the particles that exist as overspray.

Q. And to what extent from the standpoint of the efficiency and the use of paint does that occur?

A. With regards to, generally with regards to an operation of this type, you might have 20 to 25, 30% over-spray, depending upon the object being sprayed and the necessary mechanical momentum you have to give to the particle to get it broken up.

Q. What is the requirement in using a No. 1 system such as the, that illustrated in Exhibit 7 with respect to means for handling and eliminating over-spray from the standpoint of the atmosphere?

A. Well, the requirement is that you obviously have to have some sort of a trapping or catching device for that overspray. If you don't, it goes out into the air and contaminates the neighborhood or it may contaminate your own plant on the inside or generally would be troublesome and annoying; people working around would inhale it. Of course, that is not good; it is not allowed by law, so you have to incorporate in such devices, even though the percentage has been greatly reduced over ordinary spraying operation, you are required by law to provide such places with ventilation and a recovery system that will take the form of dry type booths as shown here or you have just simply a mechanical square plate set up in the plenum chamber, so the air in getting there has to go around them and contact them so in a sense you scrub out some of the particles in the air stream. You could just as well have a water curtain here which would provide a means of scrubbing or washing the air. Obviously the need for such a thing depends upon the magnitude of the operation. If you are only going to operate for two minutes, you can get by with much less adequate recovery system than if you operate for 24 hours out of the day.

Q. Now, can you tell us whether or not any steps were taken by Ransburg to further eliminate over-spray in spray painting methods?

A. Yes, there were, sir.

Q. Would you take your seat, please?

A. (Witness resumes the witness stand.)

Q. What was the next step that you know of that was taken in that direction?

A. The next step that was taken in the direction of eliminating over-spray was to try to devise or get somebody else to devise an air gun which would effectively or more effectively break up this coating material at a lower air pressure, one of the difficulties being here and one of the reasons here for inefficiency is the fact this material, by being broken by an air stream, is actually blown through the electrode system, its velocity gets too large and because of that the paint is lost, and so it was our desire to [illegible] to get—attack the problem first by trying to get guns designed which were better atomizers, so to speak, which would atomize at lower pressures.

(The defendant, for purposes of identification, handed the Reporter certain documents for marking, and which were by said Reporter marked Defendant's Exhibits Nos. 8-A and 8-B.)

Mr. Hume: I will state for the record these two drawings correspond to the drawings of the Starkey Patent in suit '536, 8-A showing Figures 1 to 6 inclusive and 8-B showing Figures 7 to 9 inclusive and their purpose here is to have these exhibits in the record in the same colored form as the larger charts to which I will direct the witness' attention.

The Court: Any objection?

Mr. Meroni: I don't believe there was an offer, your Honor.

Mr. Hume: I will offer those at this time.

(Defendant's Exhibits 8-A and 8-B offered in evidence by Mr. Hume.)

Mr. Meroni: Object to them as being redundant. The patent has been received in evidence and these are merely duplicates of the patent drawings.

The Court: The only difference is the coloring there to correspond with the same system of coloring that is used in Exhibit 7, as I understand.

Mr. Meroni: Yes, your Honor, which at this stage is meaningless.

The Court: I will overrule the objection. We don't have a jury here and I understand the duplication will not be harmful.

(DEFENDANT'S EXHIBITS 8-A and 8-B are admitted and read into the evidence and made part of the record in this case, said exhibits being in the words and figures following, to-wit:)

Q. Before we go further, may I ask, do you have an understanding as to what the coloring on this Exhibit 8-A is?

A. The coloring on the exhibit corresponds essentially to the same coloring which was on the original drawing, the yellow being again the paint or fluid lines, red being the atomizing device or atomize head, the green being the voltage pack, the blue being the object to be painted, and the orange being the conveyor to support the article.

Q. Now, will you proceed with your description as to how the device operates?

A. In operation this device is essentially positioned at a reasonable spacing away from the object on the conveyor. The object is in metallic contact with the conveyor and the conveyor is grounded. The atomizing device here represented in red at 13 is connected by a suitable electrical conductor to a voltage pack, 20 (referring to chart),

the other side of which is grounded at 21. Under the—pardon me just a moment—the coating material is introduced from a suitable supply or container by way of a hose to the atomizing head and in Fig. 2 a cross-section of that atomizing head or device is shown again in red as being a triangular cross section. The hose, 19, introduces the coating material at the rear, fills up the cavity, and the coating material oozes out of the openings on the front or sharpened edge of that device and under the action of the electrostatic field which exists between the atomizer and the object by virtue of the atomizer being charged and the object being grounded, this coated material breaks up in a fine spray and separates and disperses, and eventually is precipitated on the article being coated.

Q. Would you describe the construction shown in Figures 3 and 4, please?

A. This is another modification of the same device in which the coating material is again introduced in the yellow line to the inside of the container, except that here (referring to chart) as shown in Fig. 4 each of the openings in the front or exposed edge of the head has associated with it what might be termed a regulating valve. It is essentially a tapered conical shaped member which fits into the orifice and thus controls the size of the orifice and thus controls the amount of coating material that can flow out of the orifice to the atomizing point.

Q. Now, will you describe the illustrations in Figures 5 and 6 of Exhibit 8-A?

A. Figures 5 and 6 represent still a further modification which could be used to regulate or control the flow of coating material from the inside to the outside point of atomization. In this particular modification, shown in 5 and 6, there are a series of cylindrical parts compacted between side walls, 214 and 216, and separated by a suitable central separator. The action of compacting these

cylindrical members into that head obviously leaves small openings or channels down along the length of the members between each of them and through that orifice, or opening, that the coating material will pass in order to arrive at the outside surface of the extended portion of the head and essentially carry it, then, from there to the atomizing location at the end of those openings.

Q. Now, when the device of Exhibit A is in use, is there an electrostatic field in existence?

A. Could I ask for that question again?

The Court: Read the question.

(The last question was read by the Reporter.)

A. Yes; there is an electrostatic field existing between the atomizing device and the object on the conveyor. That spacing between the two being such as to represent an area or space which is under electrical potential difference so you have an electro field.

Q. Are there any lines of force in that field?

A. I would like to point out that you ask are there any lines of force in that field. Actually the concept of lines of force is a tool that is talked about in the electric business for the description of electrical forces that exist there and in this sense there are lines of force that exist in that field.

Q. And these forces which are defined by the lines of force that you have indicated extend from where to where?

A. They would originate on the one electrode and terminate on the other, originating, generally speaking, being most concentrated at the point of closest proximity to the other object and ending on the other object in density which is in conformity to the shape of that object.

Q. What effect does the electrode, and we will refer to the electrode at the atomizing head and of the field, have on shaping the field at that point?

A. Well, the shape of this electrode at the origin and,

as we would refer to it here, has everything to do with the shape of the field at that point. If this is a cylindrical or spherical surface then the lines of force would be distributed over the front side of this sphere. If a sharp and triangular portion, as shown in Figure 2 exists then the lines of force will originate at the sharp end, front edge of that device and will move out toward the object repelling one another, but also having to end up on the object.

Q. And what is the effect on the shape of the field, if any, of the electrode supplied by the article being painted?

A. Well, at that end of the field, the shape of the electrostatic field or the distribution of the lines of force, which essentially is the shape, will be determined by the object again. I mean the shape of the object.

Q. Now, is there atomization of paint occurring in the use of the system of Exhibit 8-A such, for instance, as in Figures 1 and 2?

A. Yes, paint atomizes and that atomization is indicated by these tufts or brushes that takes place here. That paint would atomize and would disperse and would appear as coating on the article being coated.

Q. What causes the atomization?

A. The atomization is caused essentially by the attraction which exists between the liquid at the front edge of the atomizer and the article on the conveyor.

Q. Well, what force causes it?

A. Electrical forces. Those forces are electrical in nature by virtue of the fact that basically the head itself is attracted toward the object but since it can't move, particles of paint on the front edge, which are free to move obviously will move and be broken and transported across here.

Q. Does the electrostatic field have anything to do with the atomization?

A. It has everything to do with the atomization.

Q. Now, is there any dispersion or conveyance of atomized particles in the system illustrated in Figures 1 and 2 of Exhibit 8-A?

A. Yes, it is a characteristic of lines of force and also of particles once charged that they are charged with the same sign and they will tend to try to get away from one another, and immediately upon being formed they will try to disperse. They will follow the same characteristics as the lines of force. They will spread out and will, so to speak, run down that electrical hill which is represented by electrical lines of force and eventually end up on the surface of the article as a dispersed individual droplet which will have to be supplemented by another one immediately in back and eventually enough of the drop is accumulated to give you a coating over the entire surface.

Q. Is there any deposition of the paint in this system illustrated in Figures 1 and 2 of Exhibit 8-A?

A. Yes, certainly. The paint which leaves here is deposited on the article being coated or the conveyor, which is likewise and here as you will note is the other end of the hill, the electrical end of the hill (indicating) and the particles will run down and collect on the conveyor. The desirable thing is to have them all end on the object if at all possible.

Q. Does the electrostatic field have anything to do with the dispersion and conveyance?

A. Yes, it has everything to do with the dispersion and conveyance.

Q. And does it have anything to do with the deposition?

A. It is responsible for the deposition. As a matter of fact, so much so if particles get started on a line of force which, due to the shape of the object happens to

come out into space, you might say, and go around here (indicating) that line of force has to end up on the object some place and that may be even on the back side so the particle will come around here and sit down on the back side, actually opposite the article, in order to find its location.

Q. I direct your attention to Exhibit 8-B and ask you if that is familiar to you?

A. Yes, sir, this is a representation of the second page of drawings from the Starkey and Ransburg patent.

Q. Do you understand how that works?

A. I do, sir.

Q. Will you describe that to the Court, please, and tell us what the color is first?

A. The coloring again corresponds to the color that appears on the other chart, yellow being the fluid supply line, red the atomizing head, blue the object being painted and orange, the conveyor itself, and green, in Figure 9, the voltage supply.

Q. Well, now, will you direct your attention to Figure 9 and tell us what is shown there, please?

A. Figure 9 is a schematic representation of the overall operation of all of these devices in which you have a grounded point, 321 in the voltage supply, a transformer secondary represented by the coil, a voltage rectifying, two-element tube represented in the circle and that is connected to any one of these atomizing devices shown here as 313, and positioned opposite an article, 310 on conveyor, 311, which is grounded at 312.

Now, coating material here is introduced to the inside of 313, flows through any one of these orifices which have been described, and appears at the front sharpened edge of 317 and is broken up, dispersed and atomized off of that edge as shown here by the yellow dispersed spray, to the best of the artist's ability, I presume, and is carried by the

field which exists between the head and the article across that space and sets down on the article, 310.

Q. Would you give us a detailed description of the construction of the head shown in Figures 7 and 8?

A. Figure 7 essentially shows an over-all view of a device which is similar to the other devices and was arranged to feed the coating material at controlled rate to the front exposed edge of the head and in this arrangement you have attached to the end of the supply line a device which in cross section looks like Figure 8. You have a pipe which extends the length of the head.

In that pipe, and you are going to introduce coating material into the inside of that pipe, in that pipe there is an opening or a series of openings along the bottom surface and that coating material runs out of that opening onto a sheet which lays down along the back side and is attached to the pipe at the top and ends at the bottom in its front sharpened edge, you might say. There are ends in this device which keeps the coating material confined within its length and about the pipe and the sheet there is wrapped a fine wire wrapping. Actually this is done in order to get a series of uniform spacings between the wires, by wrapping two wires on the edge and taking another out and you get a series of nicely spaced openings along this bottom, and through those openings, the coating material oozes or runs and appears at the outer sharpened edge in the position and condition to get satisfactory atomization.

Q. Now, directing your attention to the various figures of the drawings of the patent, is there any difference in principle in the operation of the various modifications shown there?

A. No, they are all operated on the same principle, namely some method of feeding through the atomized head a controlled rate of flow of liquid which then passes out to an exposed front edge of the atomizing head, which head

is positioned opposite the object charged to a high potential so you get the possibility of this electrostatic field bringing up the material and moving it across the space onto the object to be coated.

Q. Now, what kind of a flow is used in supplying the paint to the head in these forms of the Starkey invention shown in Exhibits 8-A and B?

A. The flow in this particular case is caused by the gravitational head through this tube to the atomizing head and in the other cases it is anticipated that that flow will be supplied either by gravity or air pressure or some other method.

In Figure 3 the flow, although brought to the head by air pressure or gravity, the flow through the head is actually controlled by the valve, a little valve shown in Figure 4, and this other device, the valve mechanism in the line, is intended to control the over-all flow of paint to the head which is then distributed to the head by virtue of the opening in this central pipe.

Q. Is the flow controlled or uncontrolled?

A. Definitely controlled. It is controlled by virtue of the fact in this case, in order to control it at a desirable level, at this tank the supply is broken up into three heads so this section of the head will not have more flow to it than the top one by virtue of the difference in hydrostatic level—

The Court: The witness is referring to Exhibit 8-A now.

Q. And Figure 1 of that Exhibit 8-A?

A. That is correct.

Q. Now in what form is the paint presented to the electrostatic field at the atomizing head?

A. It is in the form of a liquid which, I might say, in terms of this device is considered to be inert. It is not driven by any other forces except those which are required to present it at that particular location.

Q. Now, does the paint itself in the systems disclosed in Exhibits 8-A and B function in any capacity as an electrode itself?

A. Yes, the paint obviously is at a potential identical to the electrode system and, as I mentioned awhile ago, is under that same attraction or pulling force due to the electrical field. Obviously under those circumstances that droplet or small body of inert liquid will be drawn out into a papered cone or cusp and off the end of that little cone cusp or projection obviously the coating material will come. I mean it is the logical way to get paint from bulk into small particles by drawing it out into fine fiber and that is created here by the electrical field.

Q. Is that drawn or illustrated in Figure 7 of Exhibit 8B?

A. Yes, these lines were the artist's conception to illustrate the conical shape at the bottom of the head which ends up in the extension which then becomes the source of the atomized particles.

Q. And from what part does the actual atomization occur with respect to these streamers you are speaking of?

A. These streamers,—the atomization will obviously have to occur off the end since you have a transition from solid continuous liquid to a spherical or otherwise disposed small particle. You will have to have that transition existing, and the small particles come off the end of that extension or filament.

Q. Now, these areas from which atomization occurs, are they spaced on the head?

A. Yes, they are spaced along the head uniformly, generally depending on the device, the characteristics of the device as far as openings are concerned, and also depending upon the electrostatic field.

Q. What is the relationship; what is the character of the spacing?

A. The character of the spacing generally will be uniform across the head and you will go out of one cusp or pyramid into the next in a curve that represents a liquid surface like you might see it in a spinning glass or something like that. So you go in a series of loops, so to speak, from one point to the next along the head.

Q. What is the magnitude of the spacing?

A The magnitude of the spacing will depend upon the voltage and on the spacing of the openings in the head.

Q. What is shown here as the magnitude of the spacing?

A. The magnitude of the spacing here would probably be of the order of an eighth of an inch between those two positions, between two adjacent positions.

Q. Is it significant in the system to have the points, locations of the atomization, in relationship to each other insofar as it bears on the electrical field?

A. Yes, it is significant to have those close otherwise—you have to have to get a nice uniform painting operation. You will have to have those points sufficiently close so that at the electrical field they tend to lose their identity. In other words, if you had a series of points like my fingers positioned at some point like this which would be separated from the points to my hand a distance of only an inch or so, then the points would look like they were individual. But if you separate them that distance then the points look like they are one continuous—

The Court: The distance referred to by the witness indicates about a foot?

The Witness: In normal practice that distance would be about a foot, yes.

The Court: All right.

Q. Would it be proper to call the edge of the atomizing head as an atomizing zone?

A. That would be a correct reference. I would say that

represents a region or zone or a location where atomization takes place.

Q. And what is the relative disposition of that zone to the electrostatic field?

A. That zone generally would lie along the atomized—the front-most extended edge of the atomizing device, and would extend out from that head to and including the ends of these streamers that come off the head.

Q. Directing your attention to Figures 5 and 6 of Exhibit 8A, what is the fact as to the form of the liquid at the atomizing zone?

A. In this arrangement the form of the liquid at the atomizing zone gives you a streamer which comes out from between the two extensions and extends out away from the front edge 217 of the atomizing head a distance corresponding to what I have mentioned,—the atomizing zone extending from that point to the end of the streamers which are thus formed.

Q. Well what would be the relative spacing of the streamers with respect to Figures 5 and 6 of Exhibit 8A?

A. In this they would be spaced identical to the spacing which exists between the elements 215.

Q. What kind of a spacing is that with respect to the overall electrode?

A. In this device that spacing would be of the order of three-sixteenths of an inch as compared with a spacing of the atomizing device from the object of six, eight, ten inches.

Q. How is that with respect to this action I think you referred to as the opposite electrode looking at it?

A. That is sufficient so that particles emanating from one such point will have an opportunity to disperse and merge with the similar articles coming from another point, and so there will be precipitated on the object a reasonably dispersed image, so to speak.

Q. Just to clear up the record, did you say "articles" or "particles" in your last answer?

The Court: Will you read the answer?

(The Reporter read the following answer: "That is sufficient so that particles emanating from one such point will have an opportunity to disperse and merge with the similar articles coming from another point, and so there will be precipitated on the object a reasonably dispersed image, so to speak.")

The Witness: The second word that you have transcribed as "articles" should have been "particles".

* * * * *

Q. Dr. Miller, I would like you to compare, please, the location of the atomizing zone as it appears in the Starkey Patent in suit as represented by Exhibit 8-A and Exhibit 8-B respectively and the location of the atomizing zone in the No. 1 process which you have stated is illustrated in Exhibit 7.

A. The atomizing zone in the Starkey and Ransburg Patents as indicated in Fig. 1 embodies the region throughout the entire extent of the head and the front of the head.

Q. What is its relationship to the electrostatic field?

A. It is at the same point as the electrostatic field originates on the atomizing head itself. It is coincident with that particular point.

Q. How does that compare with the location of the atomizing zone or region in the No. 1 System?

A. In the No. 1 System the atomization or atomizing zone is located immediately in front of the spray guns and spaced outwardly from the electrostatic field to the position of those guns, and normally that is approximately 18 inches.

The Court: The witness is referring to Exhibit 7 as to the No. 1 System.

Q. (By Mr. Hume.) Now, with respect to the operation of the Starkey Patent System, is any air involved in the atomization activity?

A. No, sir.

Q. And how does this compare to the No. 1 System?

A. The No. 1 System, the air produces the atomization.

Q. What produces the atomization in the Starkey System?

A. The electrostatic field.

Q. Now, what is the relationship between the, if any, between the particles that are created in the atomizing zone of the Starkey Patent and the atomizing field insofar as the forces are represented by lines of force are concerned?

A. Well, the particles which are, as I mentioned, are created at the origin point of the electrostatic field of course are created, you might say, at the origin of that field; in other words, they will simultaneously come into existence at the point where the electrostatic field starts and that field extends as a single electrostatic field, then, to the object.

The Court: The witness is now indicating on Exhibit 8-A.

Q. (By Mr. Hume.) Does the fact that the particles are created at the location that you have described have any effect on the subsequent activity in dispersing and depositing?

A. Yes. The fact they are created at the point of origin in the field, first of all, accounts for the fact they are charged and, secondly, accounts for the fact they will then be, so to speak, placed on a line of force, and as the result of the existence of that line of force, will follow it as it extends from that point of atomization to the object and terminates on the object.

Q. You said "placed on the line of force." Will you explain that?

A. I mean they arrive, they are atomized, perhaps I should say, by the actual existence of that force and will follow its direction, and in that sense I meant that they would be in that line of force, so to speak, or at that the-

oretical track that extends from a point of atomization to the point of object.

Q. Now, in the Starkey Patented system, how many electrostatic fields are involved?

A. There is only one electrostatic field involved; namely, that one which extends from the site of atomization to the object, itself.

Q. And is that the field that you said does the atomizing?

A. That is the field which does the atomizing, the dispersion, and the deposition. The single field accomplishes all those purposes.

Q. Now, when an object to be painted is caused to move past the atomizing head, as on a conveyor of some sort, what effect, if any, does the shape of the article have on the shaping of the electrostatic field at the article end of the field?

A. As shown in the Fig. 1 of Exhibit 8-A the field will extend from the atomizing head or atomizing zone to the object on the conveyor. The shape of the field is determined by the shape of the atomizing zone or the head, and the shape of the object. Now, as the—as one object moves in to replace another, that field shifts from one object to the other, and if they happen to be of the same or different shapes, why the field will modify its shape at that end, at the end of the object to conform to the shape of the object. You might visualize it as, so to speak, "snapping." It stays with one object and then snaps to the next one to take up the shape of the succeeding object as it comes along on the conveyor.

Q. Now, suppose an article was placed on the conveyor and moved into the position opposite the head electrode which had the shape of a letter "H" of the alphabet, for instance, and I am assuming an object which would be of small enough size to fit within the influence of the forces

of the field. What would be the shape of the field at the article end of the field?

A. The shape of the field at the article end under those circumstances would be essentially the shape of the figure "H".

Q. And how would the lines of force adjust themselves at the article end? How would they terminate on the article?

A. They would—Generally thinking, in the letter "H" you might visualize they would terminate reasonably uniformly over the surface, the flat surface over the letter "H" which was presented to the atomizing head, and at the corners or sharp edges they would extend to concentrate and possibly spill around onto the side surfaces slightly.

Q. Is there any word for that expression "spill around" that you mentioned?

A. The field wraps around, so to speak, to the side surfaces and the top surface and the bottom surface.

Q. Is that "spilling around" related to "over-spray"? Are you telling us that is over-spray?

A. No, no. The spilling around of the field is the electrical diminution of the field as it extends to those side surfaces and, actually, in the case of the Starkey-Ransburg Patent, where you have the single field extending from the site of atomization to the object, the particles will accumulate on those side surfaces as dictated by those lapped-over lines of force, you might say.

Q. How far around the article; for instance, you have got a round tubular article, how far around does this wrap-around extend its influence?

A. It will fall off as the distance around the surface increases, and there is a physical rule which governs that: it falls in inverse proportion to the square of the distance away.

Q. Now, considering the end of the field at the location of the head, where the atomizing zone occurs, what is the

effect, if any, of the shaping of the field at that end by the electrode?

A. Well, the field at the end of the atomizing head is shaped entirely again by the shape of that particular electrode. If that is long and extended and thin, the field will be long, extended and thin and will take up the shape of the electrode.

* * * * * *

Q. What is the consequence, if any, of this difference that you have referred to in the economies of the No. 1 and the No. 2 Systems, the latter being represented by the Starkey patent in suit?

A. The consequences are that in the case of the Starkey Ransburg patent, essentially all of the particles which leave the atomizing zone end up as coating material on the object because there are no other disturbing forces, whereas in the No. 1 process the disturbing forces, the existence of the air and the atomizing forces, do not allow all the particles to be accumulated so they are lost.

Q. Expressed in terms of percentages, the paint that is sprayed, what percentage would you say is saved by using the process and apparatus patents in suit compared to the No. 1?

Mr. Meroni: I object to the question as being indefinite unless tied down to particular paints and coatings because it varies all over the lot. I think the question is indefinite.

Mr. Hume: I will modify it to confine to the experience of this witness.

Mr. Meroni: It is also general and not confined to any particular structure.

Mr. Hume: The experience of this witness to the extent that the No. 2 Systems have been practiced by the Defendant Ransburg.

A. The deposition efficiency in the case of the No. 2 processes will be of the order of 98 to 100 per cent. I

mean that 98 to 100 per cent of the material which leaves the atomizing zone will actually be precipitated on the opposite electrode or grounded object. In the case of the No. 2, or the No. 1 process, as illustrated here in Exhibit 7, that efficiency for a comparable object such as is shown in the can-shaped object would be in the order of possibly 70 per cent. That is 70 per cent of the material which leaves the origin source will actually end up as useful coating material on that can.

* * * * * *

Q. Will you explain to the Court the construction of the plaintiff's painting system, using the emitter of the plaintiff and tell us how it works?

A. That device is constructed of two brass discs.

The Court: I might suggest you—that the Witness, the Court observes, is also reading from Exhibit 13A and 13B. You have only handed him Exhibit 12 for this question.

Q. I will also hand you Exhibit 13A and 13B, if that will assist you in your description of the operation.

A. The device is constructed of two brass discs, which are essentially flat on one side and on the opposite side are tapered to a sharpened edge. Those two discs are placed flat side to flat side and are held together by a central cylindrical type construction which is essentially a stud and cap screw or cap arrangement, which is intended to hold the two flat surfaces of these members in intimate contact with one another.

Now on the flat side of the disc, you have near the center of each disc a recessed portion which, when the two discs are brought together, form a cavity which is essentially washer-shaped in cross section.

Q. Have you prepared any drawings that illustrate the construction you have described?

A. Yes, I have, sir.

Q. I direct your attention to Exhibits 11A and 11B and ask you if those are the drawings?

A. These are drawings which I had prepared to illustrate this construction.

Q. Now will you continue with your description, and if you can be assisted in your description by referring to these drawings, I suggest you point to the object that you want to bring up.

A. In 11B, or Figure 1 of 11B, the two discs which are mentioned are shown in Figure 1 in red, with the bolt that passes through the center to hold them together. The central recessed portion here is shown in yellow on that figure, and as will be seen from this figure, there is placed between the two discs a black spacer type element which is so arranged that it does not completely conform to the disc shape of the object but is essentially a disc from which a quadrant has been taken off. Perhaps I should say a segment instead of a quadrant. A segment has been removed and attached to the disc. At the one end of this bolt structure which comes through the center is a tube shown here in yellow, which tube is to support the object and to also introduce coating material to these small drilled channel openings which brings the coating material from the tube to the recessed portion of the construction when the two discs are held together against the spacer.

There is in the tube a needle valve which is there for the purpose of controlling, turning off and on, or regulating the flow of the coating material from the tube to the recessed portion and then from the recessed portion out of the cut-away segment of the spacer, through the space between the two discs to the outer sharpened edge.

This device is then mounted opposite an article to be coated. The article to be coated is grounded.

The Court: He is now referring to Exhibit 11A.

A. (Continuing.) And the other side, one side of the

high voltage supply is connected to the atomizing device, as shown in this drawing at the point of the tube support, and the other side of the power supply is necessarily grounded to complete the electrical circuit and establish the field between the atomizing device and the object.

Q. Now I am reading from the stipulation entered into between the parties dated November 7, 1958 with respect to the operation of the plaintiff's system, and it says:

"As indicated in the drawing, Exhibit 28-C, the emitter structure is connected to a power supply which • • •"— first of all, do you find that power supply?

A. That is shown in green on Exhibit 11-A.

Q. "• • • which applies a potential in the range from about 25,000 to 110,000 volts."

Do you find that?

A. That would be considered a high voltage, as indicated on this as being supplied to the head by that high voltage line.

Q. Then it says: "The emitter is spaced from an object to be coated."

Do you find that?

A. The object in this drawing is called "article being coated" and it is shown in blue.

Q. Then it says: "• • • which is at ground potential."

A. There is shown on Exhibit 11-A a ground connection to the article.

Q. It says: "The spacing between the emitter and the article has ranged from about 10 inches to 3 feet."

Is that represented there accurately?

A. The space is represented and it is approximately the right order of magnitude as compared with the other devices and spacing shown in the figure.

Q. "As the liquid coating material is delivered to the sharp circular edges of the disc, the high voltage gradient

present forms the liquid material into discharge streamers."

Do you find that?

A. On this drawing 11-A those are referred to as "atomized spray of liquid coating material," and they are shown as lines existing between the atomizing head and the object; and on Exhibit 11-B they are actually referred to as "discharge streamers"—Figure 2 on 11-B.

Q. Point to the discharge streamers.

A. (Witness complied with request of counsel.)

That is on 11-B as the black portions which extend out from the red portion indicated as a disc in the upper figure of Figure 2 of 11-B.

Q. Now, these two figures on the right-hand side of 11-B are enclosed in a circle. Would you explain that to the Court, and let the record show how that should be read and looked at? What is that circle?

A. That circle is what would be an enlarged view of the condition which exists at the atomizing edge. The red portion which is curved at its right-hand side is actually an enlarged portion of the atomizing edge of the slotted disc emitter; and when looking at an enlarged view of such a small section of the emitter you would see these streamers extending out,—discharge streamers, as referred to here, extending out from that edge into the space beyond.

Now, actually this drawing would be somewhat confusing in that regard because when you were looking at the enlarged portion of the emitting edge you probably would not be able to simultaneously see the stuff which extends out of that region of bird's-eye view, so to speak, but you would have—

Q. (Interposing.) Is the circular ring a frame of visible area there like a magnifying glass?

A. That would be my interpretation of this drawing, yes. If you look at the discharge edge of the emitter with

a magnifying glass you would see that region immediately adjacent to the edge, and then the ring is shown dotted here and it's shown emitted in the lower portion, and I presume that that means you no longer visualize that as being a restricted area but now you can extend that out to what you could see outside and away from that area.

Q. How far do the streamers extend in the showing of Exhibit 11-B?

A. Do you want numerical—

Q. (Interposing.) Not in dimensions, but tell us what the characterization on the drawing is that represents streamers and what the characterization is where they terminate and when something else happens.

A. Well, the streamer itself actually is represented on this as being the full darkened portion which extends out beyond the circle of view, as I will call it here, and at that point that streamer breaks up into a fine spray which is referred to in the drawing as "atomized charged particles," which are then discrete particles in the space or portion.

Q. Represented by what in the drawing?

A. They are small black dots, or they look—I guess that is as close as we will have to describe them.

Q. Now, look at the black lines that extend from the atomizing head or emitter here at the article being coated in Exhibit 11-A. They are lines all the way. What does that represent with respect to streamers or atomized particles?

A. This would be an integrated path of the atomized particle on its way from the head to the object.

Q. Well, has there been any effort to show in Exhibit 11-A atomized particles by dots such as shown in Exhibit 11-B?

A. No, there has not been. The two dotted lines which appear here are extensions of the zone of atomization which

extend around the head over onto the surface of the object. Actually they are straight lines, although you get an optical illusion here that makes them look curved.

Q. Referring again to the stipulation of November 7, 1958, it says: "The emitter takes the form of two sharp edged discs."

Do you find those?

A. Yes, those would be the larger red members in Figure 1 of Exhibit 11-B.

Q. And where are they in Exhibit 11-A?

A. In 11-A you are looking at a side view of such a disc and so it takes a disc shape.

Q. And what color are they in the drawing?

A. That is red in 11-A also.

Q. It says: "They are located on a generally cylindrical inlet body."

A. That generally cylindrical inlet body is designated in Figure 11-B as being a "liquid inlet body" which is shown as a bolt-type structure with a cap nut.

Q. It says: "A single cap nut threaded onto one end of the inlet body allows quick and easy disassembly of the two sharp edged discs."

Where do you find that?

A. That is so designated as a "cap nut" on Figure 11-B.

Q. The stipulation says: "Liquid coating material is fed into the inlet body through an inlet tube."

Do you find that?

A. Yes, it is designated here as an "liquid inlet tube," and it is shown in yellow in Figure 11-B—Exhibit 11-B. Pardon me.

Q. The stipulation says: "The amount of flow being controlled by a valve located in the tube."

Do you find that?

A. That valve is designated as a "needle valve" and is also yellow on Exhibit 11-B.

Q. Then it says: "Material issuing through the valve is directed to the space between the two discs by an angularly disposed passageway in the inlet body."

A. There is such an angularly disposed passageway indicated in the liquid inlet body in Figure 1 of Exhibit 11-B, and that leads from the liquid inlet tube to the space between the two disc members.

Q. It continues: "The liquid coating material thereupon flows radially outward under a slight positive pressure to the outer, sharp edges of the discs from which it is atomized."

Do you find that?

A. That would be indicated by the yellow coating which surrounds the black spacer; and at the top of Figure 1 of Exhibit 11-B that spacer does not exist, but allows free passage to the outside sharpened edge.

Q. How many electrostatic fields are employed here?

A. There is one electrostatic field employed. That, namely—referring to Exhibit 11-A—that which exists between the atomizing device and the object.

Q. What force in the plaintiff's system is represented in Exhibits 11-A and 11-B and in the stipulation that causes the atomization of the coating material?

A. The electrical forces of the single field which exist between the atomizer and the object being coated.

Q. Is there dispersion or conveyance of the particles in this plaintiff's system?

A. That dispersion and conveyance of the particles from the atomizing head shown on Exhibit 11-A to the article takes place and is due to the existence of the single field between those two objects.

Q. Is there deposition in the plaintiff's system of the paint particles?

A. There is deposition of the paint particles on the object due to the action of this single field.

Q. Is there an atomizing zone in the plaintiff's system?

A. Yes, there is an atomizing zone.

Q. Where is it?

A. It exists along and adjacent to the atomizing head edge. Actually it would be specifically located at the end of the discharge streamers which are shown in Figure 2 of Exhibit 11-B.

Q. Now, if objects of different shape should be moved past the emitter head of the plaintiff's system, what would occur with respect to the influence of the article on the electrostatic field in so far as the shape and size of the field are concerned?

A. The shape of the field at the article end of the field would be determined by the article, just as the shape of the atomizing head determines the shape of the field at the other end of the field or at the atomizing head end of the field. And as various shaped articles would be moved by this device in turn their shape would in turn determine the shape of the field at that end of the field.

Q. Now, with respect to the forces on the atomizing head, that is, forces of electrostatic field; where in relationship to the point of emergence of those forces from the head does the atomization occur in the plaintiff's system?

A. In a device of this type the coating material actually would be drawn up in the discharged streamers, and since they are essentially a part of the atomizing device, they become the end of the device as far as that end of the field is concerned, and the electrostatic field originates there and extends from there to the article being coated as a single field.

Q. Now, when the plaintiff's device is being utilized and as represented in Exhibit 11-B, where the streamers marked "Discharged Streamers" are shown to exist, what

actually constitutes the electrode at the discharge head end of the field?

A. Actually, the streamers themselves constitute the end of the electrode, the electrode itself. They become an integral part of the discharge head, of course, and electrically they are integral with it, so they become the outermost portion or origin part of the field.

Q. What is it they become, the electrode, and actually in that sense replace the head? What do you mean?

A. They have electrical conductivity which as they are drawn out into space, they actually extend the physical shape of the electrically conductant disk by virtue of their own electrical conductivity and in a sense enlarge the disk to the extent of their length, and since they form the outermost portion of that disk, the portion which is closest to the object, they will be the end of the field at that point.

Q. The fact they are the end, does that have any significance in action as an electrode?

A. Yes, because they are the end that is the origin or the site of the origin of the force, you might say, and a particle formed at that point under the, you might say at the origin point of the field, will be charged and will be automatically under the control of that field and will follow its line to the object.

Mr. Hume: Your Honor, I offer in evidence Defendant's Exhibits 11-A and 11-B respectively.

(Defendant's Exhibits 11-A and 11-B reoffered in evidence by Mr. Hume.)

Mr. Meroni: (For Plaintiff.) For what purpose?

Mr. Hume: For showing the illustrated description of this witness of the plaintiff's operation.

Mr. Beroni: I have no objection to their being offered as being illustrative of this witness' testimony.

The Court: EXHIBITS 11-A and 11-B are admitted and read in evidence.

• • • • •

Q. I will show you Exhibit 16 and call your attention to the first column on Page 3 there and ask you is there any disclosure of voltage in that patent? If you find any reference, will you read it to the Court, please?

A. Yes, there occurring on Page 3, Column 1, Line 28 says "Preferably the generating apparatus is adapted to supply direct current with the voltage of the order of 100,000 volts."

Q. What is the characteristic voltage used in the No. 2 Systems?

A. It would be between seventy-five and one hundred thousand volts, generally speaking.

Q. In the stipulation we had the term "voltage gradient". Can you explain what voltage gradient means?

A. Voltage gradient basically and mathematically is defined as the rate of change of the electrostatic field intensity. In terms of what we are talking about here, and in terms of describing that, by the use of lines of force, it might be visualized in this manner: That the intensity of an electrostatic field would be measured by the number of lines of force which would pass through any unit cross sectional area which was drawn out between the two objects had the field existed between them, and you might say if you had two lines of force per square inch that would be a certain field strength. If you had ten lines of force per square inch that would be a field strength of five times as large; now, if you went from a situation where you had a field strength of ten lines per square inch to a situation where you had a field strength of two lines per square inch, there would be a change in the field or the field would have a gradient in which case, if those two positions were separated by one inch in space, then the gradient would obviously be the field at the one point ten lines per square inch minus the field at the other point, two lines per square inch or the difference would be the eight lines and the

gradient therefore would be eight lines per square inch per inch, and so the field of strength is defined in that way in terms of the lines of force. Actually it has the units of volts per centimeter.

Q. Now, does the concept of voltage gradient involve anything to do with the spacing of the electrostatic head and the article in considering the electrostatic fields in systems of this type such as in the No. 2 System?

A. Yes, that is correct. It does have considerable to do with it in this regard, that a field established between two objects you might say has a line of force for every unit electrical charge which is maintained on the one object with respect to the other and since there is, you might say, a line of force for every individual charge, that is by definition, then a line of force has to leave the object and has to end up on the surface or on an opposite surface which is of a different potential.

Obviously, with a shape such as shown in Figure 11A, the lines of force originating on the atomizing head, or the emitter, originate over a reasonably small area and by their very nature diverge or repel one another and end up on a much larger area of the object. Therefore, the lines of force are going to be much more condensed or compacted at the vicinity of a sharp or cornered edge than at a large plane surface. QED, the field divergence at a sharp edge is much larger than it is at a flat or large surface.

Q. Giving your answer, you said Figure 11A. Did you mean to say Exhibit 11A?

A. Yes, Exhibit 11A. Pardon me, sir.

* * * * *

Q. What is the fact as to whether or not additional equipment such as booths, etc. are necessary in the use of a system such as exhibited in 17A?

A. From the standpoint of coating material loss and, therefore, from the standpoint of coating material collection, so you get it out of the area there is no need for such collecting devices or trapping devices but they are necessary from a standpoint of ventilation of the general area, to remove solvent vapors which are annoying to the operator and to the surrounding personnel, so, generally speaking, you have to have this operation carried out in a ventilated area.

Q. Is there any difference in the character of the quipment that is involved in a conventional commercial installation for eliminating paint on the one hand and vapor fumes on the other?

A. Yes, there are. Normally you would be permitted to rid yourself or rid the area of the solvent or the paint fumes by a simple ventilating device, making no effort to trap or otherwise get rid of that material whereas if you had paint entrapped or entrained in the air stream, as you do with other processes then naturally you have to scrub the air or otherwise strain it to get rid of that material. I might add if the operation is very large, in other words, if there is a lot of paint being used and if you happen to be in a residential area, the law requires that you scrub the air. Los Angeles is a typical example of what might happen when you don't do that.

* * * * *

Q. Now, returning to the bell a moment, in 17A, if a series of objects were to be moved past say one of the bells which had varying shapes as such by way of illustration as the letter H and letter O, or some other shape like the letter X, in series, what would be the condition of the electrostatic field between the bell and the articles being coated with respect to size and shape?

A. The field would originate at the atomizing bell, and since the front edge of the bell was annular in presentation,

the field at that end would be annular in shape and it would modify and change its contour as you went from the bell to the article on the conveyor and if the article on the conveyor is in the shape of the letter H, the field at that end of the field would have so modified its shape that it would then essentially conform to the letter H and if the letter H was proportionately in size so the field could extend over its entire surface it would do so.

Q. What would happen when a new shape came along like the letter O?

A. The end of the field would be appropriately modified by that shape in order to essentially conform to the shape of the article on the conveyor.

Q. Assume the same set of conditions for articles traveling on the conveyor for Exhibit 17B. What would happen?

A. Under those circumstances, the single electrostatic field we are speaking about here would originate at the disc in the form of a line which would be horizontal due to the fact that the disc, 17B, is horizontal and would extend out toward the article on the conveyor and would have the shape of the article which was dictated by the shape of the articles on the conveyor. Now, if there were a group of letter H's going along on the conveyor, each of those letter H's would have its portion of that field so shaped that it would conform to the letter H on the conveyor and as the letter O would come along, as it entered the loop, that portion of that field would shape itself to the form of the letter O.

Q. Suppose the articles had a spacing between them, what would occur in that space from the standpoint of the atomizing head supplying paint to that space?

A. That space would be, the field which would normally be directed at that space would be redirected automatically by its own characteristics to conform to the shape of the nearest articles before and behind the space on the con-

veyor and coating material would go into that space and appear as coating on the next adjacent two articles. If the space became too large, then the field may not reach those two articles and die, so to speak, as far as the coating operations are concerned.

* * * * *

Q. Will you refer to Claim Two, Dr. Miller, please? I will treat the language of that all the way down to the part that says "The step of," and before that expression, the claim is defined as "a method of electrostatically distributing liquid as a coating on a surface wherein liquid supplied at a controlled rate to a single-fluid atomizing head is atomized into discrete particles and such particles are dispersed to form a spray and deposited in a dispersed condition while still in liquid state as a finished coating on a surface spaced a substantial distance from the head * * *"

Now, can you tell us whether or not the disclosure of the method of exhibit 8A is that type of method as defined in that language?

A. It is, sir.

Q. Is the method of the Plaintiff's System as exhibited in Exhibits 11A and 11B respectively that type of method?

A. It is, sir.

Q. And what is the answer to the same question with respect to the Ransburg commercial method, 17A, the bell type?

A. It is.

Q. What is the answer with respect to Ransburg method 17B?

A. It is there also.

Q. The disc type?

A. Yes.

Q. Would there be any difference in your answer with respect to 17B when the same question is applied to 17C,

A. My answer would be the same, sir.

Q. Does that apply to your answers given throughout the rest of the testimony where I referred to the elements of Claim One?

A. It does, sir.

Q. Now, do you find any response to the following language:

> "The step of maintaining between the head and the article an electrostatic field which electrostatically effects said atomization, dispersion and deposition."

Do you find that in the method of the System of Exhibit 8A?

A. I do, sir.

Q. Now, where do you find that?

A. That is indicated in Figure 1 of Exhibit 8A as the voltage supply is shown as being connected between the ground and the atomizing head, and the article is spaced from the atomizing head and grounded as indicated by 12, and in the words of the patent, a single electrostatic field is established between those two.

Q. Do you find any response to that in Figure 9 of Exhibit 8B?

A. Yes, that is also shown in Figure 9 of Exhibit 8B which is a diagrammatic representation of a general form of this System.

Q. Now, do you find any response to that provision or step that I read in the Plaintiff's System illustrated in Exhibits 11A and 11B respectively?

A. In Exhibit 11A, the power supply again is shown as being connected between ground and the atomizing head or emitter, and the article being grounded and placed opposite the emitter would indicate that a single electrostatic field is maintained in this particular situation also.

Q. What effects the atomization in the System of Exhibit 11A and 11B?

A. The electrostatic field.

Q. And the dispersion?

A. Is also effected by the electrostatic field.

Q. And the deposition?

A. Likewise effected by the electrostatic field.

Q. I will now direct your attention to the Plaintiff's commercial System illustrated in Exhibit 17A, which is the bell system. Do you find any response to that provision in that system?

A. Here also the fact that the power supply is connected to the atomizing heads would indicate that there is a single electrostatic field maintained between each of the atomizing heads and the articles on the conveyor.

Q. How about the disc systems of 17B and 17C?

A. Same situation exists in those two cases.

Q. And in these commercial systems of 17A, 17B and 17C respectively, what effects the atomization?

A. The electrostatic field.

Q. And the dispersion?

A. That is also effected by a single electrostatic field.

Q. And the deposition?

A. Likewise effected by the electrostatic field.

Q. Now, will you now direct your attention, please, to Claim Ten which appears in the seventh column of that patent. I am still referring to Defendant's Exhibit No. 3 which is the method patent, 536 in suit.

This Claim provides for a method of electrostatically distributing liquid as a coating on an article. Is the system in the patent in suit, is it illustrated in Exhibit 8A, that type of system?

A. It is.

Q. How about the system of the plaintiff as illustrated and exhibited in 11A and 11B respectively?

A. Also that type of system.

Q. How about the commercial systems of the plaintiff's in 17A, 17B and 17C respectively?

A. Likewise they are electrostatic coating systems.

Q. Each of them?

A. Yes.

Q. Now, the Claim continues— "the step of moving the article past and in spaced relation to a zone of atomization." Do you find any response to that language in the Starkey patented system of Exhibits 8A and 8B?

A. In Exhibit 8B the sheet is shown as being moved past the atomizing device and Figure 1 of Exhibit 8A, the article, 11, is indicated as being a conveyor for such carrying purposes.

Q. Do you find any response to that language in the plaintiff's system of, or the system illustrated in Exhibits 11A and 11B?

A. As far as the exhibit itself is concerned, there is no indication of the article being carried by, but I presume it could be, sir.

Q. Any response to that provision in the commercial forms of Exhibits 17A, 17B and 17C respectively?

A. In each of those particular exhibits, there is shown a conveyor for carrying the articles past, and in spaced relation to the zone of atomization which exists about the atomizing bell or disc, as the case may be.

Q. Now, the claim continues— "• • • feeding liquid coating material in a relatively narrow stream, spreading said stream to form it into a body of liquid coating material having an extent many times the maximum cross-sectional dimension of said stream." Do you find any response to that in the patented system of Exhibits 8A and 8B?

A. In the Exhibit 8A, the hoses connecting the supply source with the atomizing head certainly meet the condition of being a single, relatively narrow cylindrical stream which, when it arrives at the atomizing head, is opened up

and distributed into a dispersed condition or an extended condition in conformity with this language.

Q. Now, do you find any response to that provision in the plaintiff's construction and process exhibited in Exhibits 11A and 11B respectively?

A. Yes. There is such a thing which does exist in view of the fact that the coating material was introduced through the relatively narrow opening in the hub of the device shown in Exhibit 11B and then allowed to spread and extend out into that area between the two discs.

Q. Is there any response to that provision in the commercial construction of Exhibit 17A?

A. Yes. The coating material here likewise is fed through the tube in a relatively narrow, constricted arrangement or manner and then as it arrives at the inside surface of the bell in 17A, it is spread out into an extended body of liquid coating material having an extent many times the maximum cross-sectional dimension of that stream.

Q. What is the situation with respect to the disc type of commercial system of the Defendant in Exhibit 17B and 17C respectively?

A. Likewise here, the single tube introduction device shown carrying coating material from the supply source to the atomizing bell, introduces the material in a stream of relatively small cross-sectional area at the center of the disc and then the rotation of the disc spreads the film or coating material into a film having an extent many times the cross-sectional diameter of that central orifice.

Q. The Claim continues with the language— "Maintaining at such zone of atomization the body of liquid coating material with said body having a plurality of closely spaced aligned exposed termini of relatively small area." Do you find any response to that language in the process illustrated in the patents in suit, Exhibits 8A and 8B respectively?

A. In Exhibit 8A certainly the small streamers on the body of liquid coating would be a plurality of closely spaced, aligned exposed termini of relatively small area.

Q. You find anything that responds to that language in the plaintiff's system as is illustrated in Exhibits 11A and 11B respectively?

A. In 11B the discharge streamers indicate it certainly would be such at a closely spaced, aligned exposed termini.

Q. Do you find any response to that in the bell type of commercial system of the defendant as illustrated in Exhibit 17A?

A. Such streamers are not shown in the Exhibit 17A but certainly they exist.

Q. What is the fact as to the actual procedure of the system illustrated in 17A when it is in operation?

A. When it is in operation, the coating material certainly fulfills this condition and that the pump maintains, the pump and the rotation maintains that zone of atomization from a body of liquid coating material which has a plurality of closely spaced, aligned termini.

Q. What is the fact in answer to the same question with respect to the commercial system of the defendant as illustrated in Exhibit 17B and 17C?

A. Such exposed termini also exist in the case of 17B and 17C.

Q. And where are they to be found?

A. They are to be found around the periphery of the disc in these two cases.

Q. And now, the Claim continues—"establishing between the exposed termini of the coating material and the article moving past it an electrostatic field of sufficient strength that it both electrostatically atomizes small particles of coating material from such exposed termini and electrostatically deposits them still in the form of discreet spray particles while still in liquid state for distribution

into a continuous finished coating upon the article as it moves past the zone of atomization."

Do you find any language that responds to that Claim in the disclosure of the method patent in suit as represented by Exhibits 8A and 8B respectively?

A. In the Exhibit 8B such an electrostatic field actually is established and that electrostatic field would fulfill the conditions required by this particular step.

Q. And what is the fact as to whether you find response to that provision in the plaintiff's system as represented in Exhibits 11-A and 11-B respectively?

A. In the case of the Exhibit 11-B there is actually shown small particles of coating material which are atomized from such exposed termini and they are shown there as a, small black dots emanating from each of the exposed termini.

Q. And where in that disclosure is the electrostatic field?

A. The single electrostatic field, or the electrostatic field required in this step, is indicated as existing in Exhibit 11-A by virtue of the fact the power supply is connected to the atomized head to the other side of the power supply being grounded and the article being grounded.

Q. So the electrostatic field exists between what?

A. The electrostatic field exists in this case between the discharge streamers at the edge of the atomizing head and the article displaced opposite two in this case.

Q. Is there any response to that language in the defendant's commercial form of apparatus as illustrated in 17-A?

A. The operation of the apparatus illustrated in 17-A and of the coating system trade there certainly meets the conditions of this step in that an electrostatic field is maintained between the head and the article, which field is capable of producing streamers from which are atomized

the coating materials in conformity with the conditions of the step.

Q. What is the answer to the same question with respect to the disk forms of Exhibit 17-B and 17-C?

A. The same thing exists there in the case of the form shown in 17-B and 17-C, the exposed termini as mentioned before being existent about the edge of the atomizing disk and the field existing between those exposed termini and the article on the conveyor.

Q. In the commercial construction of the defendant, is the electrostatic field as employed of such strength to electrostatically atomize small particles of coating material from such exposed termini?

A. It is, sir.

Q. And electrostatically deposit them in the form of discrete spray particles while still in liquid state?

A. That is correct, sir.

Q. And for distribution into a continuous finish coating upon the article as it moves past the zone of atomization?

A. That is correct, sir.

Q. Now, the claim continues, "And continuously and at a controlled rate maintaining said stream to supply coating materials to said body to replace the coating materials atomized therefrom by the action of the electrostatic field." Do you find anything in the patented process of Exhibits 8-A and 8-B respectively which responds to that step?

A. That step is certainly fulfilled by the device shown in Fig. 1 of Exhibit 8-A and in those devices shown in Exhibit 8-B, specifically in that the coating material is supplied to the device at a controlled pressure which under the existing conditions of tube dimensions, and so forth, opening dimensions would be at a controlled rate; likewise, the valve indicated in the Exhibit 8-B would be for such control.

Q. Do you find any response to that provision of that language of the process claim in the system of the plaintiff as exhibited in Exhibits 11-A and 11-B respectively?

A. In 11-B there is shown the needle valve which is for the purpose of controlling the rate of fluid delivery to this device.

Q. Does that serve to feed liquid to replace the coating material atomized from the head by the action of the electrostatic field?

A. As indicated on Exhibit 11-B a tube, which is designated as the liquid inlet tube, and I presume there would be liquid supplied to that tube from a source not shown in a manner so that the flow through the regulating needle valve would be of such a character as to maintain a stream of coating material to supply that coating material which is atomized therefrom.

Q. Do you find any response to that language in the defendant's commercial form of a system illustrated in Exhibit 17-A?

A. Yes, the pump and centrifugal rotation serves to provide to the body of liquid coating material at the atomizing zone a supply of liquid which is intended to replace that coating material which is atomized therefrom.

Q. What is your answer to the same question with respect to diagram for the commercial devices of the defendant as represented in Exhibit 17-B and C respectively?

A. They are also the pump and the rotation of the disk combined to provide this step in each of these cases.

Q. Now, the claim further said, "Said atomization and deposition both being effected in quiescent air." You have answered that in respect to one of the other claims. I will just ask you here if that characterization claimed is to be found in the patent in suit as represented in Exhibit 8-A and Exhibit 8-B.

A. It is.

Q. In plaintiff's Exhibit, device, as represented in Exhibits 11-A and B?

A. It is.

Q. And three commercial devices represented by Exhibits 17-A, B and C respectively?

A. It is, sir.

Q. No, the claim says, "The direction of movement of said article relative to said body of coating material being such as to effect a substantial displacement of the article's surface transverse to the general direction of the lines of force of the field during particle deposition to cause such lines of force to sweep such article's surface." Do you find any response to that in the patent in suit as represented by Exhibit 8-A and 8-B respectively?

A. Yes, sir. In Exhibit 8-A, Fig. 1, the lines of force would generally emanate from the atomizing device and would terminate on the article, striking the article's surface essentially perpendicular to that surface, and the movement of that surface would therefore be essentially perpendicular to the lines of force of the electrostatic field.

Q. Now, assuming that the article shown in blue in Exhibit 11-A, of the plaintiff's system, is being moved on a conveyor, past the atomizing head which is, I might say for the Court's benefit, the subject matter of the interrogatories that have been introduced and the answers thereto, would you find response in the plaintiff's system with such moving articles to that provision of the claim?

A. Such motion here also would be perpendicular to the direction of the lines of force.

Q. And what is the answer to the same question with respect to the defendant's commercial device or system illustrated in Exhibit 17-A?

A. The same situation exists in that device.

Q. And that is by virtue of what?

A. By virtue of the fact the field emanates from the atomizing device and terminates on the surface of the object being coated. Motion of such object would, therefore, automatically be in a direction perpendicular to those lines of force.

Q. What is your answer to the same question as applied to the commercial construction of, or, systems illustrated in Exhibit 17-B and 17-C, respectively?

A. The same thing exists in those two situations.

Q. And that is by virtue of what?

A. By virtue of the field which exists between the disk edge and the article on the conveyor.

Q. The claim continues as follows: "The spacing of said body of coating material from the article being great enough that the atomized particles will disperse under the action of the field as they move toward the article until they are distributed over and deposited onto a portion of the article's surface having an area many times the area of the exposed termini."

Do you find any response to that provision in the claim in the system of the patents in suit as illustrated in Exhibits 8-A and 8-B respectively?

A. Certainly the spacing is sufficiently great in Exhibits 8-A and 8-B to permit them to meet the step of this particular portion of the claim.

Q. Now, do you find any response to that provision in the plaintiff's system as illustrated in Exhibits 11-A and 11-B respectively?

A. Such spacing is sufficiently great to permit this condition to be met and actually in 11-B, the dispersion is actually shown as taking place; therefore, it likewise would be illustrative of meeting this particular requirement.

Q. What is your answer as to whether that provision can be found in the system of the defendant used commercially as the bell system as illustrated in Exhibit 17-A?

A. That is also true. The bell is positioned at a distance away from the device being coated so that the space between its front edge and the device being coated permits this dispersion that is referred to in this case.

Q. And what is your answer to the question as applied to the commercial systems of the defendant as illustrated in Exhibit 17-B and Exhibit 17-C respectively?

A. In 17-B and 17-C the loop diameter has to be sufficiently large to provide this dispersion that is referred to.

* * * * *

Cross-Examination by Mr. Meroni.

Q. According to your testimony earlier in this proceeding here, it is my understanding that between the years 1938 and 1943 you worked for the Ransburg Company as a consultant; is that correct?

A. That is right, sir.

Q. What type of work did you do for Ransburg during that period of time?

A. I worked periodically with Harold Ransburg, aiding him in setting up and planning experiments relative to his development of electrostatic spraying.

Q. His development, I believe you said, materialized in the No. 1 System, as you call it; is that right?

A. That is correct.

* * * * *

Redirect Examination by Mr. Hume.

Q. Now, referring to your testimony of yesterday, I think I understood you to say that in 1943, power packs were not generally available on the market from other sources which would be suitable for the purposes that the Ransburg Company had in mind at the time and then you later said that there were power packs on the market of proper voltage and of proper amperage. In what way would you say that the power packs that were available as stated were not satisfactory for Ransburg's purposes?

A. They were not safe, sir.

Q. Is that the—Any other characterization you would apply?

A. It is not safe both from a personal standpoint and from a fire-hazard standpoint.

* * * * * *

Q. Now, do you remember the exhibit that was shown to you yesterday, that had an illustration of the Zeleny device? I will put it here before you and it has been marked for identification as Plaintiff's Exhibit HHHH, and I refer you to the showing which is the little figure in the right-hand column on the exhibit. Do you remember being shown that yesterday?

A. I do, sir.

Q. I now want to ask you whether or not that particular device has any controlled feed of liquid to the outlet end of the capillary tube.

A. Actually it does not.

Q. What would happen when the electrostatic forces are turned off in that case?

A. There would be no material issue from it, from the orifice at "A."

Q. Do you have any knowledge as to the rate at which liquid is put through the device as described in the Zeleny Articles?

A. I do, sir.

Q. Can you state that for the record, please?

A. From calculations of the information which is given in Zeleny one can establish that it would take somewhere in the neighborhood of six to eight weeks to deliver a pint of coating material from such a device, pint of liquid.

Q. Running how long a day?

A. All day long, and around the clock, so to speak; continuously.

Q. Do you have any information as to how far it is between the end of the outlet of the capillary and the opposite

plate, marked "B" in this figure I have referred to in Exhibit HHHH?

A. In all cases that is only a fraction of an inch or several centimeters.

• • • • •

PLAINTIFF'S EXHIBIT NNNN.

DONALD C. HOWARTH, called as a witness in behalf of the Plaintiff herein, having been first duly sworn, was examined and testified as follows:

Direct Examination by Mr. Meroni.

Q. Please state your name.

A. Donald C. Howarth, H-o-w-a-r-t-h.

Q. Where do you reside, Mr. Howarth?

A. Indianapolis, Indiana.

Q. What is your post office address?

A. Rural Route 14, Box 704, Indianapolis 20.

Q. How old are you, sir?

A. I am forty-two.

Q. By whom are you at present employed?

A. By the Ransburg Electro-Coating Corporation.

Q. In what capacity?

A. Well, I am in charge of the installation and service and purchase and manufacture of equipment, the sales engineering laboratories, and drafting.

Q. How long have you been employed by that company?

A. Since January, 1948.

Q. Can you give us a brief resume of the different positions you have held with the company since you have commenced employment with them?

A. Well, since January of '48 I have had essentially the same job that I have today.

• • • • • •

Q. Now, after your company gets this engineering data sheet from its salesman, what is done then in the normal processing of one of these matters?

A. Well, assuming that the prospect is still interested, he will send sample parts to our laboratory, and we usually request a quality standard or one that he is presently producing which meets his quality standard for use in the laboratory. We will then set up a laboratory demonstration based on the information and data sheet of the conveyor speed and work height and that type of item, using his coating material and we will run these parts for him to determine mileage figures as well as how adequately we can coat the particular parts.

Q. Are those demonstration installations set up under what you might call the most ideal circumstances from the standpoint of the use of the Ransburg No. 2 process?

A. No, I would say probably not in a good many cases.

Q. Have you not found a number of instances where, for example, in such installations, by the use of adequate air exhaust means and things of that type you were able to get a better condition than existed in the plant of the prospective licensee?

A. Oh, I think that may be true. On the other hand, I think though that most of the time the licensee makes a change in his set-up after he sees our demonstration before he installs it in his plant.

In other words, usually his existing conditions are not suitable for installing the No. 2 process in any event.

Q. Well, you certainly wouldn't make a demonstration installation that would not be the most favorable to the sale of your license, would you?

A. No, except that we are limited in our own facilities. For example, we do not have good temperature control or good exhaust conditions in our present facilities. We have quite a bit of dirt and things like that that many plants do not have.

Q. Well, is it not a fact that in some instances you have had complaints from licensees because they didn't get as good a performance as they had hoped to obtain from the demonstration they saw in your plant due to the conditions that they had not being comparable to the conditions under which you made the demonstration?

A. Oh, I would say we have had some of those, but those conditions usually exist, come about, after the demonstration as far as the existing conditions in his plant are concerned, rather than before. In other words, he makes the changes after he sees our set-up.

Q. But usually he is led to believe that he might be able to get results somewhere near as good as those you got in your demonstration if he uses your licensed process, is that right?

A. Yes. We know he can get those results.

Q. Well now, as I understand it, the engineering data sheet is first referred to the proper people in your company and then an installation is made, using the products that have been submitted and using the coating material that the particular licensee is interested in. Then what follows?

A. Well, he may or may not come into the lab to see the parts. If he comes into Indianapolis, of course, we review the whole thing with him and show him right there exactly what he can expect. We determine the mileage figures for him, so that we can determine, based upon his present painting cost, what the savings will be. Then, assuming that those savings will be favorable to him, he will be sent a license agreement or given a license agreement, if he happens to want one right there at Indianapolis.

Q. Who is it that makes the arrangement with this prospective licensee or representative of that licensee to come over and witness the demonstration at your plant?

A. That is usually done by the salesman.

Q. Salesman?

A. Yes.

Q. And the demonstration would be made with equipment such as you would propose installing in the prospective licensee's plant, isn't that right?

A. Well, as nearly as possible. We cannot always duplicate exactly the conditions he would have, but it would be very close.

* * * * *

Q. I hand you what purports to be another letter that came from the files of your company, one dated May 27, 1953, addressed to General Electric Company, comprising two pages, and ask you if you are familiar with the practice of the company there expounded relative to guaranteeing installations.

A. I don't know exactly what you have reference to as far as guaranteeing.

Q. Well, you don't as a general policy guarantee to safeguard a customer as to faulty installation of your equipment, do you?

A. Well, that actually is beyond my job with the company. I don't have anything to do with that particular phase of it.

Q. Well, isn't it part of the job of the people associated with sales in any way to know about guarantees the company makes relative to equipment it furnishes?

A. You're thinking of guaranteeing now in the sense of the functioning, just so far as the functioning is concerned?

Q. Well, my question was broad enough to embrace guaranteeing in any of its aspects, as to performance or as to installation or any of the aspects.

A. Oh, I think we, in effect, guarantee all of our installations, even though it may not be in writing as such.

By Mr. Meroni: I would like to have this General Electric letter marked for purposes of identification as Binks Exhibit KKK. This is the letter the witness just referred to dated May 27, 1953.

(Exhibit so marked.)

Q. Do you remember having any transaction in 1953 with the Altex Corporation of Milwaukee, Wisconsin?

A. Yes, I do.

Q. Do you perchance recall a letter dated April 28, 1953, wherein you wrote the Altex Corporation and, among other things, said, "As you well know, the operation of the equipment and the manner in which the equipment is used, as well as the type of coating material used, et cetera, is entirely within your control and completely beyond ours. This being the case there is no reasonable basis on which we could possibly guarantee your satisfaction"?

I hand you that letter and ask you if that refreshes your recollection of your company's policy.

A. Yes, it does.

Q. Does that indicate that your company refuses to guarantee performance?

A. No, not at all. I mean, a guarantee of satisfaction depending on what he wants to do with it is one thing and guaranteeing to reproduce what we did in Indianapolis is another matter.

Q. Well, you had a number of complaints, did you not, in the past, where customers have complained that the equipment they got did not perform in accordance with the way it operated at Indianapolis when it was demonstrated?

A. Oh, yes, sure.

Q. Have you ever refunded any initial fees because of failure to give satisfaction?

A. Yes, we have.

Q. You have?

A. Yes.

Q. In what instances?

A. Oh, I can think of two instances. Ohio Can and Crown Company is one of them—it's Ohio Can; I am not sure of the "Crown"—I believe they are one of them. They are at Massillon, Ohio. American Fabricators in Indianapolis is another instance.

Q. Did you refund all of their initial fees?

A. Yes, we did.

Q. And what did you do, take the equipment back?

A. Took the equipment back, that's right.

Q. Was that because the equipment did not perform satisfactorily?

A. No, I wouldn't say so.

Q. Well, why did you take it back then?

A. Well, in the case of Ohio Can and Crown, which I am more familiar with than the other, they actually, I believe, had a change in coating materials right after the installation was made that didn't work satisfactorily. I am not familiar with all the details on that, but I know there were some things along those lines.

* * * * *

DONALD COLIN HOWARTH, a witness called by the defendant, being first duly sworn, testified as follows:

Direct Examination by Mr. Hume.

Q. Will you please state your full name and spell both names, please?

A. Donald Colin Howarth—D-o-n-a-l-d C-o-l-i-n H-o-w-a-r-t-h.

Q. Where do you reside, sir?

A. 9131 Spring Hollow Drive, Indianapolis.

Q. How old are you?

A. Forty-three.

Q. What is your occupation?

A. I am employed by the Ransburg Electro-Coating Corporation.

Q. In what capacity are you so employed?

A. My title is Director of Technical Services.

Q. How long have you been employed by the Ransburg Company?

A. I have been employed by the Ransburg Electro-Coating Corporation since 1948.

Q. Will you tell us who in your company is in charge of the records that pertain to the licensees and licenses that are issued by the defendant company?

A. I am.

Q. Do you have knowledge of the number of licensees that exist with respect to the so-called No. 2 type of system?

The Court: As of what date?

Mr. Hume: As of the present date.

A. Yes, I do.

Q. Would you state for the Court, please, approximately how many licensees Ransburg has with respect to the No. 2 System?

A. At present there are somewhere in excess of 300 licensees.

Q. And how many licenses does this involve?

A. This involves somewhere in excess of 400 licenses.

Q. How many spray units does it involve?

A. It involves in excess of 500 spray units.

Q. How does it happen that these figures are different? Will you explain that to the Court, please?

A. Well, one licensee may have one or more licenses, and a license may cover one or more units so that one licensee could have a good number of units.

Q. When did you first start issuing licenses of the type that you have referred to and included in your answers?

A. That would be, I believe, in 1951.

Q. What has been the situation as to the progressive issuance of licenses between the time you started and the present date?

A. I am not sure I understand your question.

Q. Well, you started off with one license, obviously. What has been the character of the growth of the licensing program?

A. We have issued licenses, of course, from year to year and it has been a growing thing so that there are quite a few licenses at this time as compared with when we first started out.

Q. Can you give us just an approximation of the amount of revenue that is brought in as a result of these licenses to Ransburg as a licensor, say, at the present-day rate?

A. Oh, at the present rate it will be in the neighborhood of two and a half million dollars a year.

* * * * * *

Q. Would you name for the Court some of your licensees that come to your mind?

A. Oh, Studebaker-Packard—Studebaker-Packard Corporation, American Motors, Johns Manville, General Electric, Westinghouse, IBM, National Cash Register, Avco, Remington-Rand.

Do you care for some more?

Q. Well, can you name a few more?

A. Royal Typewriter, Underwood, Chrysler Corporation, L. A. Young Spring and Wire.

The Court: What was that last one?

The Witness: L. A. Young Spring and Wire.

Q. Are those the ones that come to you at the moment?

A. Yes, sir.

Q. And these are part of the group you have already referred to when you gave us the total number of licensees?

A. That's right, they would be included in that group.

* * * * * *

MR. DONALD C. HOWARTH, a witness called by the defendant in rebuttal, being first duly sworn, testified as follows:

Direct Examination by Mr. Gilliom.

* * * * *

Q. In the course of your duties as the employee of the corporation in charge of its records, what is the fact as to whether reports made by the licensees of the airless or No. 2 process with respect to the use or consumption of paint in the license devices come to your attention and are kept under your supervision and custody?

A. They do come to my attention and are kept under my supervision.

Q. Have you made an examination of the reports from the licensees of the No. 2 process for the year 1957 for the purpose of ascertaining from those reports the total dollar cost to the licensees in the year 1957 of all paint, varnish and lacquer used by those licensees in the licensed airless processes and systems which you have furnished to them?

A. I have had such an examination made.

* * * * *

Q. (By Mr. Gilliom.) Mr. Howarth, approximately how many—strike that.

Under the terms of your license agreements with the No. 2 System licensees at what intervals are these reports of paint use or consumption made?

A. They are made monthly.

Q. So that you would have twelve of those reports for each licensee that you had in 1957?

A. That is correct.

Q. What is the approximate total of those separate reports which are in your files and which you canvassed

for the purpose of ascertaining the total dollar cost of these coating materials?

A. I would estimate there are about 6,000 separate reports.

Q. Are those reports a part of the records that the defendant kept in the ordinary course of its business?

A. Yes, they are.

Q. Is it your practice to retain them in your custody after they are received by the company?

A. Yes.

Q. Was the examination of those reports for the purpose of ascertaining the total dollar cost of these coating materials in the year 1957 made at your direction and under your supervision?

A. Yes, sir.

Q. From those reports?

A. That is right.

Q. Now will you please state the total dollar cost to the licensees of the No. 2 System or process in the year 1957 of all paint, varnish and lacquer used by those licensees in the equipment furnished by Ransburg?

Mr. Meroni: I repeat my objection.

I further object to this examination as being improper, being irrelevant and immaterial and as being improper redirect. If this goes to the matter of commercial success of the inventions that should have been put in in their prima facie case and not by way of redirect.

Mr. Gilliom: If the Court please, first this is not redirect examination. This is a part of the defendant's case in defense of the charges of antitrust and has to do with the matter of relevant market under the allegation that this defendant has monopolized—

The Court: Of the cross counterclaim?

Mr. Gilliom: Yes that is correct, and it is a fact relevant to that issue.

It is not tendered on the matter of commercial success on the patent case.

• • • • •

The Court: Well, I will overrule the objection subject to the defendant's producing these records at the office of the defendant this afternoon and this evening or tomorrow morning and recess the case tomorrow morning if it is necessary for them to complete this. And if the defendant —plaintiff, rather, needs this information after investigating it overnight and tomorrow morning, that the defendant produce those records in the Court room here to assist counsel for the plaintiff in cross-examining this witness on that subject.

• • • • •

A. That total dollar cost is $6,693,642.00.

The Court: Repeat the figure.

The Witness: $6,693,642.00.

Q. (By Mr. Gilliam.) Will you give the corresponding figure, Mr. Howarth? For the year 1957 of the total dollar cost to the licensees of the air type or No. 1 system of the defendant of all paint, varnish and lacquer used by those licensees in the equipment furnished to them by Ransburg?

The Court: Will there be the same objection?

Mr. Merom: Same objection.

The Court: Same ruling by the Court.

A. That figure is $3,725,857.00.

• • • • •

WILLIAM J. STELLMAN, a witness called by the defendant for purposes of rebuttal, being first duly sworn, testified as follows:

Direct Examination by Mr. Hume.

Q. Will you please state your full name and spell it, please?

A. William J. Stellman. S-t-e-l-l-m-a-n.

Q. Where do you reside?

A. 1530 West Old Mill Road, Lake Forest, Illinois.

Q. Your age?

A. Forty-seven.

Q. And what is your occupation?

A. I am a patent attorney.

Q. And have you had occasion to do patent work for the defendant, Ransburg Company, in this case?

A. I have.

Q. I am going to show you, Mr. Stellman, the Strickey Patent No. 2,794,417, which has been received in evidence in this case as Defendant's Exhibit 4, and ask you if you are familiar with that patent.

A. I am.

Q. And I will ask you if you had anything to do with the prosecution of that patent in the United States Patent Office.

A. I did.

Q. Will you turn particularly to Claim 4 of that patent and I will ask you if you are familiar with that claim.

A. Yes, I am.

Q. Did you have anything to do with the drafting of that claim during the prosecution of that application?

A. Yes, I drafted the claim for them.

Q. Now, will you tell the Court, please, the history of that claim from the standpoint of its original presentation

at the patent office until the time it was allowed and issued as a claim four in the patent and give particular reference to the dates on which the various events occurred.

Mr. Meroni: I would object to the question, your Honor. It attempts to go outside the Patent Office records of the application. It is well established the record of the Patent Office on an application is controlling as to what was done in the prosecution of the application. If Counsel is limiting his question to the file history, that is one thing; but his question, as worded, could include work done by this man in his office that is not of record in the Patent Office file, and I object to it as being too broad and being indefinite.

Mr. Hume: Your Honor, there is a charge in this case that a certain claim, namely Claim 4 of this patent, Exhibit 4, was drafted after knowledge was obtained with respect to the plaintiff's accused construction which is before the Court as drawing SK-661 which is a part of plaintiff's Exhibit ZZZZ. Now, the purpose of this testimony, your Honor, is to show that this claim was drafted without such —without any knowledge of the plaintiff's construction and this is in rebuttal of the contention that this claim was written with the knowledge of that, plaintiff's construction.

The Court: Mr. Meroni is objecting to it on the ground it is too broad, it covers the entire history of the patent exclusive and including Item 4, Claim 4. Only Claim 4 is in issue here on that particular point that you have raised, why you are offering this.

Mr. Humes: Yes, your Honor. My question is confined to Claim 4.

The Court: I misunderstood it, too.

Mr. Meroni: Your Honor, Claim 4 was amended in the Patent Office. His question doesn't limit it to the claim as it was presented in the Patent Office. It is broad

enough to cover any research work done by this man in arriving at Claim 4.

That is the point I am making.

The Court: Well, I will overrule the objection as to—I will just overrule the objection. You may answer the question. Do you recall it now?

The Witness: Yes, I do, your Honor.

The Court: All right.

A. If I may refer to some of the material which I brought with me?

Q. (By Mr. Hume.) If you will tell us the material you are referring to.

A. I am referring now to a standard diary for the year 1956 bearing my name, William J. Stellman, which has entries in it from which our charges are derived. These entries were made by me and the first entry I find pertinent to Claim 4 is an entry on July 4, 1956, where it indicates at home I worked on Ransburg case 166, re: the final rejection which had previously been entered.

Q. What is the meaning of 166?

A. 166 is the office designation of the application which resulted in Patent Exhibit 4 which you handed me. 166 is the application of the patent Exhibit 4. On July 5, 1956, my diary shows that I had a conference with Mr. Brady, one of my partners, re: Case 166 which is this case, and on July 6, 1956 there was an all-day conference with the, I believe my partner, Mr. Brady, was there, and Mr. Johnson, Mr. Downer, I believe from Ransburg; I believe Mr. Trask was there, too.

Q. Who is Mr. Downer?

A. Mr. Downer is one of the patent attorneys for Ransburg Electro-Coating Corporation.

Q. Who are the other gentlemen you mentioned?

A. Mr. Johnson is also a patent attorney for Ransburg. Mr. Trask is one of the attorneys of record in this case.

Q. Who were they representing?

A. Ransburg at the time.

Q. Continue, please.

A. At that time a suggested claim was drafted which eventually became claim four with some modifications and it was determined at that time that I should have an interview with Mr. Mitchell, who was the Examiner in the Patent Office having charge of this application.

Mr. Meroni: I move to strike the part of the answer which has to do with some other claim than Claim Four, which eventually became Claim Four. He is talking about some other claim other than Claim Four now.

Mr. Hume: Your Honor, the witness will tie that in.

The Court: Based upon the offer of counsel, the objection will be overruled.

A. Turning in my diary to July 24, 1956, there is the entry of Case 166—

The Court: (Interposing.) Is that 1956 or 1946?

The Witness: 1956.

A. (Continuing.) Case 166, conference, Mitchell, and draft claim in Washington, D. C.

Q. Do you recall such a meeting?

A. I do.

Q. Will you tell us what took place at that meeting?

A. At that meeting I had for Mr. Mitchell's consideration a draft of a new claim which would be the forerunner of Claim Four. Mr. Mitchell and I at that time discussed the claim back and forth for some time.

Q. Tell us who Mr. Mitchell is.

A. He is the Examiner or was the Examiner in Division 25 of the Patent Office having jurisdiction of the application which resulted in the patent which is in—

Mr. Meroni: (Interposing.) I move to strike the answer, your Honor. Conferences with an Examiner are not admissible. The only thing that is controlling in the prosecution

of a patent application is what is recorded in the patent application and file history. I submit that conferences between this man and the Examiner are utterly immaterial and irrelevevant and can't be used to any way vary the written record in the Patent Office.

The Court: As I understand it, there is no conversation whatever in this answer that was had with Mr. Mitchell except the subject he discussed.

Mr. Meroni: Well, I object also on the ground it is indefinite.

The Court: The objection is overruled. All it does is say that he met with the man. Your next question.

A. (Continuing.) To continue my answer Mr. Mitchell and I at that time agreed upon a claim.

The Court: We are getting into hearsay and we might as well save the record. We are going to have objections to this and the answer will go out.

Q. Was a claim drafted at that time?

A. Yes, it was.

Q. By whom?

A. By me.

Q. Do you have a copy of the claim that was so drafted?

A. I do.

Q. Will you hand it to me, please?

A. Yes.

Mr. Hume: I will ask the Reporter to mark this as Defendant's Exhibit No. 19.

(The Defendant, for purposes of identification, handed the Reporter certain document for marking and which was by said Reporter marked Defendant's Exhibit No. 19.)

Q. Is that claim that is marked "Proposed Claim" on Defendant's Exhibit No. 19 identical in every respect with the claim that was drafted at that time on the occasion of your conference with Mr. Mitchell in Washington?

Mr. Meroni: Objected to as leading. The claims can be compared on their faces.

Mr. Hume: He already said that was the claim he drafted. I just wanted to make it—

The Court: (Interposing.) It is leading. The objection is sustained.

Q. Will you compare the claim that is on the Exhibit 19 with the claim which was drafted on the occasion of your visit with Mr. Mitchell which you just referred to?

A. Making that comparison and disregarding the penciled notations on No. 19, the claim there typed as Claim 18 is a true copy of the claim that Mr. Mitchell and I agreed upon.

Mr. Meroni: I move to strike the last part of the answer about having agreed upon anything, and also not being responsive and outside the record and immaterial and irrelevant.

The Court: That part of the answer will go out as hearsay.

Q. Was that claim, as drafted, shown to Mr. Mitchell at that time?

A. Yes, it was.

Q. What was the date of that meeting?

A. July 24, 1956.

Q. Mr. Stellman, I am going to show you an exhibit which has been received in evidence in this case as Plaintiff's Exhibit ZZZZ-8 and ask you if you are familiar with that drawing?

A. Yes, I am.

Q. And I call your attention to the fact that it is marked SK-661 in the lower righthand corner.

A. Yes.

Q. Had you seen that drawing on that exhibit at the time of the drafting of the claim that you have referred to as Plaintiff's Exhibit No. 19 or rather Defendant's Exhibit No. 19?

A. No, I had not seen the drawing.

Q. What are the penciled notes on Defendant's Exhibit 19?

A. They are indications of changes in the claim that were suggested.

Mr. Meroni: I object to the answer and move to strike it as being indefinite unless it is indicated it was suggested by him or the Examiner. There is an inference there, Your Honor.

Q. Will you explain what you mean by that, please?

A. Suggested neither by myself nor the Examiner. After having agreed upon the claim with Mr. Mitchell, I subsequently discussed that claim with some of the other attorneys for Ransburg, namely Mr. Trask, Mr. Downer and Mr. Johnson at a subsequent meeting and at that meeting, these changes indicated in pencil on Exhibit No. 19 were suggested.

Mr. Meroni: I move to strike out any portion of that answer having to do with any agreements with the Examiner for the same reasons as before stated.

The Court: That part of the answer referring to agreements or conversations with the Examiner are out of the record. That is the only portion you objected to?

Mr. Meroni: That is all I am objecting to, Your Honor.

Q. Will you explain for the record what changes are shown there, and I am referring to the penciled modifications over the typewritten portion of the exhibit, Defendant's Exhibit No. 19?

A. Well, the claim, as typed—

Mr. Meroni: (Interposing.) I object to that question. I fail to perceive where it has any relevancy. They could have discussed a thousand changes and it makes no difference as far as this record is concerned. The interpretation of Claim Four is dependent upon the file history, and what changes these people discussed is not in this controversy.

Mr. Hume: Your Honor, this evidence runs to a charge that we had knowledge of a certain construction on a certain date and the proofs are running to rebut that charge and we are not talking about what the file history shows or doesn't show, and besides, I don't agree with Mr. Meroni that we are restricted to the file history. The proof here runs to the subject matter as to what we knew at the time this claim was drafted and we deny that we had any knowledge of the accused construction at the time Claim Four was drafted which is the charge made by Mr. Meroni in this case.

The Court: Would you read the question again, please?

(The Reporter read the preceding question.)

The Court: It appears, Mr. Hume, that you are qualifying this as an exhibit to admit it in evidence. There has been some changes on the face of the printed matter, I take it.

Mr. Hume: The testimony, Your Honor, is that typewritten portion of this exhibit came into being on a certain date. It was subsequently modified in pencil. I would like to get into the record just what the penciled changes are although the exhibit actually speaks for itself. However, it is somewhat perishable. We could get in here what those changes were. I don't know that it is essential because the exhibit actually speaks for itself.

The Court: I will overrule the objection on the ground you are qualifying it. If it were offered in the state it is in now, there would be objection that there were changes in there without qualifying it properly. The objection will be overruled.

A. The words "formed into" are stricken and substituted therefore is the penciled notation with the words "to be atomized from". Secondly, the phrase "from which atomization takes place" is placed in parenthesis indicating it was to be deleted.

Q. Who made those changes?

A. It is difficult to say exactly who did it. They were made at a conference in Indianapolis.

Q. Did you have any part in making those changes?

A. Yes, I was a part of the conference.

Q. And what was done after that with respect to securing Claim Four as it is in the patent?

The Court: Will you establish when that change was?

Q. When was that change made, sir?

A. The change was made at a meeting in Indianapolis which occurred, and I am now referring to my diary, on August 8, 1956.

The Court: Excuse the interruption.

Mr. Hume: Thank you, Your Honor.

Q. There was a question with respect to the subsequent steps that were taken by you toward securing the allowance of the claim which is Claim Four in the patent.

Mr. Meroni: I again object, Your Honor. It is immaterial as far as this patent suit is concerned what they did outside of the file history record of this patent.

The Court: Overruled.

A. I then drew the amendment which should appear in the file history as Amendment C, filed on August 21, 1956. After drawing that amendment, I again went to Washington and had a short interview with Mr. Mitchell again pointing out to him the changes that had been made from the claim in the form shown on Exhibit No. 19.

Q. When was that, please?

A. That was on August 21, 1956, as I see from my diary.

Q. Now, you spoke of the file history. The file history of the patent, Defendant's Exhibit No. 4, is received in evidence here as Defendant's Exhibit No. 6. I will ask you

to refer to that exhibit and tell us what amendment you refer to and what page it is found on in that exhibit.

A. The amendment that I referred to is Amendment C found on Pages 41, 42 and 43 of the file history which you have just handed me.

Q. Which is Defendant's Exhibit No. 6?

A. Yes.

Q. And what happened after that?

A. Mr. Mitchell agreed that the claim was still in allowable form so I went downstairs and filed the amendment.

Mr. Meroni: I move to strike the answer as hearsay.

The Court: The question was what did you do, and that part that was conversation will go out of the answer.

A. If I may state, I showed the amendment to Mr. Mitchell and subsequently went downstairs and filed the amendment.

Q. And was the claim allowed as filed?

A. Yes, it was.

Q. Is that the claim which now appears as Claim 4 of the patent here in evidence as Defendant's Exhibit 4?

A. It is.

Q. Word for word?

A. Yes.

Mr. Hume: You may cross examine.

The Court: Cross examine.

Are you offering 19?

Mr. Hume: Yes.

(Defendant's Exhibit No. 19 offered in evidence by Mr. Hume.)

The Court: Any objection?

Mr. Meroni: Yes, Your Honor, I object on the grounds it is immaterial and irrelevant.

The Court: The objection is overruled and 19 is admitted and read in evidence.

(DEFENDANT'S EXHIBIT NO. 19 is admitted and read into the evidence, and made a part of the record in this case, said exhibit being in the words and figures following, to-wit:)

(Here Insert.)

Mr. Meroni: I don't believe I have even seen Exhibit 19, Your Honor. I would like to look at it.

The Court: I will withdraw the admission of it. I thought you had, when you stated your objection here.

Mr. Meroni: I renew my previous objection and I object to it on the further ground that it is not the best evidence of Claim 4 is, this being a carbon copy with some changes on it.

The Court: What do you say about that?

Mr. Hume: Your Honor, that is not offered for what Claim 4 is; it is offered to show the subject matter of the claim that was drafted on the occasion of the meeting with Mr. Mitchell in Washington on the date stated by the witness. And I say this is the best evidence. It is the copy that the counsel had in his files on that.

Mr. Meroni: It is still not Claim 4, Your Honor.

The Court: The objection will be overruled and Exhibit 19 is admitted and read in evidence.

* * * * *

PLAINTIFF'S EXHIBIT KKKK.

EDWIN M. RANSBURG, being first duly sworn to testify the truth, the whole truth and nothing but the truth relating to said cause, deposes and says:

Direct Examination by Mr. Charles Meroni.

Q. 1. Please state your name.

A. E. M. Ransburg.

Q. 2. And the "E" stands for what?

A. For Edwin.

Q. 3. Where do you reside, Mr. Ransburg?

A. Indianapolis.

Q. 4. How old are you, sir?

A. Forty-three.

Q. 5. By whom are you employed presently?

A. Ransburg Electro-Coating Corporation.

Q. 6. In what capacity?

A. Vice-President.

Q. 7. As Vice-President you have any particular duties assigned to you?

A. Yes, I administer the Engineering Department.

Q. 8. Are there other Vice-Presidents?

A. Yes.

Q. 9. And do they have charge of other fields of activities as distinguished from yours?

A. Yes, sir.

Q. 10. Who are they?

A. Gregg Ransburg, Secretary; Harold Ransburg is Vice-President in charge of sales and installations.

Q. 11. Who is President?

A. Harper J. Ransburg.

Q. 12. Now, Gregg and Harold are your brothers, are they?

A. Yes.

Q. 13. And Harper is your father?

A. Yes.

Q. 14. How long have you been Vice-President?

A. Since the forming of the corporation.

Q. 15. Approximately when was the corporation formed?

A. 1948.

Q. 16. Was there a predecessor business on which the corporation was based?

A. Yes.

Q. 17. What was the name of that business?

A. Harper J. Ransburg.

Q. 18. Was that a corporation or partnership?

A. Partnership.

Q. 19. Did the transition from the partnership to the corporation have much the same business as the partnership had?

A. Yes.

Q. 20. In other words, you were merely changing from a partnership status to a corporate status, is that about it?

A. Yes.

Q. 21. Who were the partners?

A. The present officers of the Ransburg Electro-Coating Corporation.

Q. 22. When was the partnership formed?

A. I think 1941.

Q. 23. And at the time of the formation of that partnership, what was the general nature of the business?

A. Well, the primary part of the business was manufacturing and selling house furnishing merchandise.

Q. 24. When did that partnership, if at all, get into the business of electrostatic plating or coating or whatever you call it?

A. We had, prior to that time, been doing work in electrostatic painting, prior to 1941.

Q. 25. How far do your activities go in that respect?

A. To about 1937.

Q. 225. (By Mr. Meroni.) Now, getting back to this development work that you carried on with Mr. Starkey leading up to the filing of your application, the last stage we arrived at was this detearing stage. What was the next step in the program?

A. It is my recollection that last we arrived at was spraying onto a sheet of paper from this radar part. Following that, Starkey and I discussed trying to make some apparatus that would practice the invention and in early December we had a device constructed.

Q. 226. Of what year, sir?

A. 1943, along the lines shown in Figure 1, but without division in the atomizing head; just a series of holes in the bottom of a V-shaped sheet metal trough.

Q. 227. Let's see what structure you did develop that was new, if any.

A. Well—

Q. 228. (Interposing.) You didn't have to develop a container for the paint such as 18, did you?

A. We did.

Q. 229. You did develop a container for the paint?

A. Yes.

Q. 230. What type of a container?

A. It was made of sheet metal and it went down to a V. I guess it was very similar to what is shown in Figure 2.

Mr. Hume: Before you answer, make sure you understand the question.

Mr. Meroni: Let me rephrase it.

Q. 231. (By Mr. Meroni.) Mr. Ransburg, I was talking about the element 18 in Figure No. 1.

A. Element 18?

Q. 232. Yes.

A. That is what we built.

Q. 233. That is a reservoir for the paint, isn't it?

A. Yes.

Q. 234. You didn't have to develop any reservoir for paint, did you?

A. We had this one. We designed this one and had it built.

Q. 235. I mean the actual paint or receptacle for holding the paint, you could use any receptacle for that purpose, couldn't you?

A. We wanted to feed it here to a V-shaped trough.

Q. 236. According to your patent, 18 represents some sort of, it looks like a rectangular—

A. (Interposing.) On 18? I am sorry. I was looking over here.

Q. 237. You took some tank for that purpose?

A. We had a standard pressure tank.

Q. 238. And the conduits, 19, were conventional, were they not?

A. That is right.

Q. 239. And I believe the pack, 20, was a conventional pack, according to you?

A. Yes.

Q. 240. So that the thing you developed then is this thing designated by the numeral 13, is that correct?

A. Yes.

Q. 241. And that is what might be termed the emitter?

A. That would be a satisfactory word. We call them atomizing heads.

Q. 242. Well, does any atomizing actually take place in that device, 13?

A. Just in front of the head.

Q. 243. Not in the interior?

A. No.

Q. 244. Now, in your work with Mr. Starkey in December of 1943, just what did you do in arriving at the head, 13?

A. We, I believe, sketched it out and then one of the

shop employees took a piece of sheet metal and bent it into the cross-section or shape shown in Figure 2 and drilled a series of holes across the bottom of the V and put a paint hose, on the back side of the head.

Q. 245. That is the conventional conduit or hole, 19, leading to the paint reservoir, 18?

A. That is right, paint reservoir 18, yes.

Q. 246. Now, you say the discharge edge, 17, is provided with a series of orifices or holes?

A. Fifteen.

Q. 247. Is that the way you constructed it?

A. Let's see, discharge edge, 17, provided with a series of orifices—

Q. 248. (Interposing.) Then, as I understand it, you drilled the smaller end of this V-shaped device so as to provide it with a plurality of spaced holes, 15, is that correct?

A. Aren't the holes called 17-A?

Q. 249. The edge is 17-A and the holes are 15. They call them orifices, which is the patent lawyer's language for holes.

A. Along its discharge edge, 17-A, we provided orifices, 15.

Q. 250. How did you determine the spacing of the holes at that time? How did you know how to space them?

A. Well, we just spaced them what we thought would be about right.

Q. 251. Did you guess at it?

A. Yes, we guessed at it.

Q. 252. So that as the paint passed through this edge, 17-A, or the bottom of this V-shaped trough, it was divided into a plurality of streams by these orifices, is that right?

A. Well, a little droplet would ooze out of each hole.

Q. 253. You didn't leave the lower edge, 17-A, completely open in any sample you built at that time, did you?

A. No.

Q. 254. So that the lower edge 17-A of the V-shaped head, actually had means for dividing it up into these droplets?

A. It was continuous sheet metal with holes drilled in the sheet metal.

Q. 255. Even though you had no electrostatic force on, the liquid would be divided by those holes as it dropped out of there?

A. Yes.

* * * * *

Q. 271. There the object is represented on Figure 1 as in Article 10. How does that compare with the part you were using when you made these developments with Mr. Starkey?

A. Most of our tests were carried on with a paper backed up by a metal electrode.

Q. 272. You know what the Article 10 is supposed to represent?

A. I think a canister can or bucket is what we had in mind.

Q. 273. That is grounded there?

A. Yes.

Q. 274. At 12?

A. Yes.

Q. 275. And it constitutes the other electrode of the electrostatic field?

A. Yes.

Q. 276. One electrode is the head, 13, and the other electrode is the Article 10, is that right?

A. Yes.

Q. 277. Now, did you at that time try different voltages?

A. I don't think at that time.

Q. 278. Well, did you at any time prior to the filing of

your application try different voltages with the system that you tested, like Figure 4?

A. I think we may have. I think we probably did.

Q. 279. What is your recollection?

A. I think we probably did.

Q. 280. You recall any particular voltages?

A. No. Most of the work was carried on with this voltage pack that had a rated capacity of 85 to 90 kilovolts.

Q. 281. That was a 60 cycle, 220 job?

A. Yes, 220 input.

Q. 282. Did you try out any systems like that shown in your Patent No. 2685536 prior to the filing of your application, of any power packs you know of other than this one you have been talking about?

A. We may have tried it on some packs rated at 130 but their actual voltage is considerably less than 130.

Q. 283. You are not very sure of that, you say?

A. No.

Q. 284. If you had tried it out before on a different pack, is it possible that you could identify that pack at this time? In other words, could you tell us what pack it was?

A. I don't specifically remember trying it on any packs other than this one. Most of our experimental work was carried on with this one voltage.

* * * * * *

Q. 970. Let's get down specifically and tell me specifically. You have formulas here. Tell me specifically how you base your monthly fees.

A. We base our monthly fees practically in all instances on, for instance the No. 2 process—that is what you are mostly interested in?

Q. 971. Let's take the No. 2 process.

A. On the amount of paint consumed and we take a percentage of that. They pay us a percentage of the value

of the coated material they spray and that percentage varies, compared to the size of the article.

Q. 972. But it is based also on your previous running of the unit here, isn't it, or at some place else previous to the customer taking it over?

A. It is based upon our knowledge of that type of article.

* * * * *

Q. 975. Mr. Ransburg, I hand you your Bulletin No. 100 entitled "Pricing Guide" dated May 27, 1953, comprising five sheets of paper, and ask you if that, under the heading No. 2, spray process, on page 2, pertains to the pricing of your so-called No. 2 airless electrostatic system.

A. Would you read that, please?

(The last question was read by the reporter as follows: "Mr. Ransburg, I hand you your Bulletin No. 100 entitled 'Pricing Guide' dated May 27, 1953, comprising five sheets of paper, and ask you if that, under the heading No. 2, spray process, on page 2, pertains to the pricing of your so-called No. 2 airless electrostatic system.")

A. On page two?

Q. 976. Yes.

A. Yes.

Q. 977. Now, I would like to ask you what is it your home office does to determine the monthly paint costs where it says here "Determined by home office"?

A. Well, it says monthly percent paint cost.

Q. 978. Yes. We would like to know what your home office does. Tell us everything your home office does in order to arrive at that.

A. We get the information on the type of articles we wish to coat, including dimensions, and then they are generally fitted into one of the charts, the last two pages

of this bulletin, which determines per cent of the paint bill we want.

Q. 979. How do you fit them into one of the charts? Can you take an example?

A. This one marked "Pricing Chart No. 3, flat sheets for box-shaped articles having a maximum thickness of one inch," if the article has a maximum thickness of one inch, that is one dimension and the next dimension is 14 or more inches and the next dimension is 22 or more inches, and in that instance our price would generally be ten per cent of the cost of the coating materials sprayed for the monthly fee.

Q. 980. How do you arrive at the figure of ten per cent?

A. We just arbitrarily take ten per cent on that, because in the next article, which would be just a size smaller, possibly similar dimensions, but smaller, in the second and third dimensions, we get a larger percent of the paint bill on that.

Q. 981. Then you just arbitrarily set those percentages? You pick them out of the thin air, so to speak?

A. I didn't mean to imply that. We arbitrarily set them.

Q. 982. From what basis?

A. In relation to efficiencies of using coating material by competitive systems of electrostatic spray painting.

Q. 983. Aren't those percentages determined by first running the system yourself and ascertaining what the likelihood saving in paint could be under proper condition?

A. We have run tests on each of this class of article.

Q. 984. I understand you have run tests but the point I am asking is, don't you first run these articles in an installation that you think should approximate the installation of it in the field, and base it on the paint saving that you think should be effected under as efficient an operation as you carry out?

A. No, we don't do that on every job.

Q. 985. You spot it and do it on some jobs, don't you?

A. If the article falls in a certain class, then the percentage applies to that class of article as would apply to that class of article.

• • • • • •

Q. 1108. Well, I mean how did it come that your company, how did it come about that your company acquired so many of these patents from third parties or acquired rights under them, beginning I believe with the Pugh Patent?

A. Well, on the Pugh Patent, we had done some development work on electrostatic painting and in the course of that work ran across the Pugh Patent and we wanted to be certain that we were not liable to a company like Western Electric for patent infringement.

• • • • •

Q. 1167. These forms of licenses that your company got up under your direction were not intended for any specific people? They were intended for general use, weren't they?

A. What do you mean?

Q. 1168. You didn't get them up with specific licensees in mind at the time you prepared the drafts, did you?

A. Of the form?

Q. 1169. Yes.

A. Well, they were prepared for what we considered the average licensee and as you noted a little while ago, there were some typed forms from time to time, typed licenses.

Q. 1170. I don't think you quite understood my question. What I am trying to say is, you were willing to license anybody in the field that wanted a license. You weren't limiting your licenses to a specific class or group of customers, were you?

A. It was always our intention to not try to license somebody if the process wouldn't work, unless we felt confident that they would be satisfied with the results and it would make them money.

Q. 1171. Well, say John Doe came here from Texas and said, "I want a license." If he had the wherewithal to pay for it and he wanted your type of license, you would give him the license, wouldn't you?

A. Well, on that, if that is the full fact situation, I wouldn't know, because I have never been faced with that problem before. I believe we would give him a license if we felt it would be a worth while unit, one that would do him some good, but if we thought it would have hurt our reputation, our process, in the event it did not perform satisfactorily for him, if he expected miracles, beyond what the process could do for him, but we have never had that situation where the customer wanted such a license in such a situation, where we weren't in agreement.

Q. 1172. In other words, you prefer to grant a license only where you knew that the equipment that was going to be used would meet your requirements of what the equipment could do?

A. Well, we have not been interested in our requirements. We are interested in being sure that the customer be satisfied.

* * * * *

Q. 1310. Your company is a closely held corporation?

A. Quite closely held. It is substantially the Ransburg Corporation.

Q. 1311. Well, it is not generally a publicly held corporation?

A. No, it is not.

Q. 1312. I would assume the principal stockholders are your father and your brothers, is that correct?

A. Yes, and myself.

* * * * *

MR. EDWIN M. RANSBURG, a witness called by the defendant in rebuttal, being first duly sworn, testified as follows:

Direct Examination by Mr. Gilliom.

Q. Will you state your name?

A. Edwin M. Ransburg.

Q. Where do you live, Mr. Ransburg?

A. 5615 Washington Boulevard.

Q. And what is your occupation?

A. I classify myself as a manufacturer also.

Q. Do you hold an office with the defendant, the Ransburg Electro-Coating Corporation?

A. Yes, sir.

Q. What is that?

A. Vice President.

Q. And in general what area of duty has been delegated to you by the corporation?

A. Administer the research and development and consult with legal counsel.

Q. And you are the son of Harper J. Ransburg?

A. Yes, sir.

Q. You were a member of the partnership of the Harper J. Ransburg Company at the time it was engaged in the electrostatic coating business prior to the incorporation of the defendant corporation?

A. Yes, sir.

Q. Were you also working with Mr. Harper J. Ransburg as a sole proprietor in the manufacture of housewares and some of the early developments of electrostatic coating prior to the formation of that partnership?

A. Yes, sir.

Q. Mr. Ransburg, were you familiar with the procedure which the defendant followed in or about May of

1953 in which the defendant sent letters to all of its existing licensees informing them in substance if they would desire not to have the Ransburg equipment, but to retain a license without equipment, they might do so upon the basis of reduced fees?

A. Yes, sir.

Q. Will you please examine Plaintiff's Exhibit Z-2 and state whether that is typical or characteristic of the letters which were sent at that time to licensees which already had your equipment and were using it?

A. Yes, sir.

Q. Mr. Ransburg, will you please examine Defendant's Exhibit No. 26, which has been received in evidence in this cause, and particularly the third page of that exhibit which contains some form letters which are designated Letter E, Letter F, etc. I call your attention particularly to the form letter designated Letter E, which in substance informs the existing licensee that if he should wish to obtain or furnish the equipment for the practice or the process from some source other than Ransburg that his monthly fees would be reduced by the stated amounts and that there would also be a reduction in his initial fee. I will ask whether at about the time these letters were sent out in May of 1953 there were some existing licensees notified that not only their monthly fee but also their initial fee would be reduced if they sought to obtain additional equipment elsewhere?

A. They were.

Q. Under what circumstances was that done?

A. If at that time they signed a contract requiring us to supply the equipment, and the equipment had not yet been shipped, we advised them by that type of form letter, that there was a price differential if they wished to change from that license to another one.

Q. In other words, that would be in instances where

the agreement for the use of the process had been fully signed and executed by the parties but you had not yet shipped or delivered the equipment and they had not actually started the use of the system?

A. That is correct.

(The defendant, for purposes of identification, handed the Reporter a certain document for marking, and which was by said Reporter marked Defendant's Exhibit No. 33.)

Mr. Gilliom: I hope you will forgive the delay. I think if we mark several of these exhibits simultaneously, we can have them identified together and it will ultimately save time if you will bear with us for a moment.

(The defendant, for purposes of identification, handed the Reporter certain documents for marking, and which were by said Reporter marked Defendant's Exhibits Nos. 34, 35, 36, 37, 38, 39 and 40.)

Q. Mr. Ransburg, will you please examine the documents which have been marked for identification as Defendant's Exhibits 33, 34, 35, 36, 37, 38, 39 and 40 and state whether those are letters which were mailed on or about the dates appearing thereon which I think in all instances —I beg your pardon—which were mailed on or about the dates appearing thereon to the addressees of each of them by Ransburg Electro-Coating Corporation.

A. What is the question again, please?

(The preceding question was read by the Reporter.)

A. They are.

Q. And are those letters of the type which you mentioned in the answer to your earlier question where the addressee of the letter had executed an agreement with your company for the use of one of the processes and had not yet received the equipment from them?

Mr. Meroni: I object to the question as being leading. The letters speak for themselves.

The Court: Objection overruled, you may answer.

A. Yes.

Q. I note that there is some difference in the reduction in the initial and monthly fees which is stated in these various exhibits from 33 to 40 inclusive. Will you state the broad reason for the difference in those proposed reductions?

A. Differences in type of units and the type of equipment that we were obligated to ship.

Q. So that the particular reduction which was offered depended upon the type of the system which that particular addressee or licensee had or was contemplating?

A. Yes.

Q. Mr. Ransburg, to your knowledge as an officer and director of the defendant, and to your knowledge in any capacity, has any prospective licensee at any time been refused a license to use either the air type No. 1 Process or the airless type No. 2 electrostatic spray painting system without the defendant furnishing equipment, installation, supervision and replacement parts service?

A. No.

Q. To your knowledge, has the defendant ever refused to quote the fees or terms upon which a license without equipment would be available to any person who asked for such a quotation?

A. No.

Q. To your knowledge has anyone ever requested a license to use the airless type No. 2 Process, or for that matter, the air type No. 1 Process or System under any specified or particular patent?

A. Not to my knowledge.

Q. Mr. Ransburg, after the defendant sent these letters to all of its licensees in 1953 advising in substance that if they desired a license or desired to retain a license without your equipment, did any of those recipients of

those letters subsequently enter into new license agreements with the defendant?

A. Yes, sir.

Q. How many of them?

A. Fifty-five plants.

Q. How many subsequent license agreements or contracts were consummated between those recipients of that letter and the defendant after they received the letter?

A. Ninety-seven.

Q. Will you state whether in any of those 97 agreements with those 55 licensees, the licensees selected a license without your equipment, installation, supervision and replacement parts service?

A. They all elected to have us supply the equipment and the other features.

* * * * *

Q. Mr. Ransburg, before the noon recess you had testified to the effect in substance that following the receipt of the 1953 letter to all of your licensees that a number of them subsequently executed license contracts in which they chose to take your equipment. Was General Electric Company among those licensees that received that letter and subsequently executed such agreements?

A. Yes.

Q. How many agreements did the General Electric Company execute with your company after receiving the 1953 letter?

A. In their Louisville plant alone, 16.

* * * * *

PLAINTIFF'S EXHIBIT LLLL.

HAROLD P. RANSBURG, being first duly sworn to testify the truth, the whole truth and nothing but the truth relating to said cause, deposes and says:

Direct Examination by Mr. Charles F. Meroni.

Q. 1. Would you please state your name?

A. Harold Ransburg.

Q. 2. Where do you reside, sir?

A. My postal address, you mean?

Q. 3. Yes, sir.

A. Rural Route 17, Box 530.

Q. 4. How old are you?

A. Forty-six.

Q. 5. With whom are you presently associated?

A. Ransburg Electro-Coating Corporation.

Q. 6. In what capacity?

A. Vice-President and General Manager.

• • • • •

Q. 267. By the way, Mr. Ransburg, did you ever hear of a Pugh Patent No. 1855869?

A. Yes.

• • • • •

Q. 275. Did you have any dealings with Western Electric with respect to that patent?

A. Yes.

• • • • •

Q. 279. And what ensued from that, if anything?

A. We bought the Pugh Patent.

Q. 280. What did you pay for it?

A. I don't remember but I think something like $2,500.

Q. 281. You acquired the entire ownership to it?

A. I wouldn't be sure whether we got exclusive rights or an assignment or—

Q. 282. (Interposing.) Well, isn't it a fact that your company owns that patent or did own it?

A. In fact, I believe we do. I don't know whether it was an assignment or purchase or exclusive license, or what.

Q. 283. Can we have the agreements and the correspondence on that patent, please?

Was your company charged with infringement of the patent?

A. No, I don't believe so.

Q. 284. How did it come to your attention?

A. Well, it came to our attention during our application for our first patent on the No. 1 process.

Q. 285. Weren't you informed that the claims of that patent were broad and were applicable to what you were doing?

A. Well, it was due to this patent that our No. 1 process claims were somewhat restricted.

Q. 286. Who recommended that you acquire the patent?

A. Well, I am not sure but I presume it was Ralph Lockwood.

Q. 287. Now, you say you did some work with that experimentally or supervised it, is that correct?

A. Yes.

Q. 288. According to that patent, you establish an electrostatic field and then you emit or spray into that field, is that correct?

A. Yes.

Q. 289. And when the electrostatic field is on, the particles of the material are energized and are attracted and deposited on the article to be coated. That was the theory behind it.

A. That was his theory, yes.

Q. 290. Did you ever check to see whether they had

ever built one of those out at the Western Electric Company at Hawthorne, Illinois?

A. Mr. Pugh told me they had not.

Q. 291. Where did you meet Mr. Pugh?

A. He was down here several years after our negotiations with Western Electric.

Q. 292. Was he still employed by the company then?

A. Yes.

Q. 293. And for what purpose did he visit you?

A. To see our electrostatic painting processes.

Q. 294. Did he just of his own accord come here, or did you invite him?

A. We no doubt invited him, like we do everyone that has any interest in it. It was no doubt initiated by him. It was on a specific painting problem as I recall it.

Q. 295. He thought a great deal of his patent, didn't he?

A. He was very pleased with himself. Pardon me. I don't mean with himself, but I mean he was very pleased with the thought or idea.

Q. 296. Did he indicate to you or did you ascertain in any way that he had worked on this type of a development?

A. I ascertained that he had not.

* * * * * *

Q. 306. I call your attention to a Smyser re-issued patent No. 22419 and ask you if perchance, if that is the patent you are referring to?

A. Yes, I believe it is.

* * * * * *

Q. 313. What was the occasion of your acquiring rights under this patent?

A. Well, it had been suggested that some of our customers might be concerned about it if they took a license under our No. 1 process patents.

Q. 314. You recall whether you obtained an exclusive license or non-exclusive, or what?

A. I don't believe it was an exclusive license, no.

Q. 315. But you did obtain the right to grant licenses under this patent, is that right?

A. I don't know. At least it protected our customers.

* * * * * *

MR. HAROLD RANSBURG, a witness called by defendant in rebuttal, being first duly sworn, testified as follows:

Direct Examination by Mr. Gilliom.

* * * * *

Q. Will you tell us in what year this partnership was formed, Mr. Ransburg?

A. 1941.

Q. What other business was that partnership engaged in, that is, aside from the business of developing and marketing electrostatic spray painting processes?

A. We were in the business of manufacturing and marketing bread boxes, canister sets, and wrought iron flower pot holders, household kitchenware items and gift items.

Q. And prior to the formation of the partnership in 1941 by whom was that business conducted?

A. Harper J. Ransburg Company.

Q. What sort of legal entity was it?

A. Sole proprietorship of my father's.

Q. Were you and your brothers associated with your father in that business at some time prior to the formation of the partnership in 1941?

A. Yes.

Q. By what means did the proprietorship and subsequently the partnership paint its bread boxes and canister sets, etc. before the development of what has been referred to as the No. 1 Electrostatic Process?

A. Mostly by the conventional air spray hand guns, some

dipping and brush painting on the decorations, the decorative part of it.

Q. Was that true for some period of years before the electrostatic processes came into knowledge?

A. Yes.

Q. What were some of the shortcomings of the air spray gun method of painting those wares as you observed them?

A. Well, the major shortcoming was its inefficiency, the amount of over spray that went past the work we were spraying.

Q. Did you personally, and the members of the—I should say those who were associated with the Harper Ransburg Company and the proprietorship take any steps toward improving the method of painting those housewares and so forth?

A. Yes.

Q. Just state briefly what your efforts were along those lines.

A. Well, the first major step was to attempt to dip wrought iron instead of spraying it, because it was obviously the most inefficient, the greatest loss came about, percentagewise came about in the spraying of the wrought iron and the dipping process. We had many difficulties in the way of tears and sags and runs and other well-known shortcomings of dipping. And then we started working on the electrostatic painting process to overcome—electrostatic spraying process to attempt to get a higher efficiency with equality of spray.

Q. In this proceeding there has been reference to a system or method known as the detearing system. Was that used by you in connection with the dipping of wrought iron articles and so forth?

A. Yes, that was the first thing that we really put to productive use in the electrostatic painting field.

Q. In substance, what did the detearing process do in connection with the coating of articles by dipping them?

A. Well, the objects were dipped and then drained until a substantial amount of drain-off runs off by gravity and just before the final drip begins to solidify, you might say, or dry up, it is passed over the influence of a high voltage grid, which electrostatic attraction causes the excess material to be removed from the part.

Q. That detearing process is still being licensed to some extent by the defendant, is it?

A. Yes.

Q. Did you bend your efforts toward a more efficient means of depositing paint by means of compressed air spray guns in those early days?

A. In—starting with 1937, yes.

Q. What did you do, in substance?

A. Well, we got an old second-hand X-ray transformer and set up some little experimental facilities for trying to achieve electrostatic precipitation of spray paint particles.

Q. At the time you began those experiments in that development was there any electrostatic spray painting method known to industry?

A. No.

Q. Prior to that time, had you had occasion to read the trade journals and to contact firms who marketed painting and spraying equipment in connection with the manufacture of the household items and the housewares that you mentioned?

A. Yes.

Q. In all of those contacts had there ever been brought to your attention anything such as electrostatic spray painting?

A. No.

Q. From those earlier experiments with the X-ray power pack, will you state in substance what was developed by your organization?

A. Do you mean what sort of experiments we conducted?

Q. Well, just briefly what kind of a system came out of your efforts?

A. Well, we finally—ultimately we developed what we now call the No. 1 electrostatic spray process which consisted of a series of fine wires spaced from the object to be coated, the object to be coated was grounded, we put a high voltage DC on the wires, and directed the paint spray from a conventional spray gun between the wires, and the work, in such a way that some of the over-spray would be electrostatically attracted to the grounded surfaces to be coated.

Q. Did you find that when you combined that electrostatic field with the compressed air spray gun that you got an improved efficiency of paint deposition?

A. Yes.

Q. Did you ascertain that that was something which could be used commercially by you in manufacturing housewares and so forth?

A. Yes.

Q. Did you subsequently market that process to other manufacturers of items?

A. Yes.

Q. When did you begin commercially licensing others to use the so-called No. 1 or air-type process?

A. I think the first one that stayed in production and was outside of the experimental range was in 1944.

Q. What were the principal advantages of the air-type electrostatic system over the old non-electrostatic air spray system?

A. Well, the major generalized advantage was the savings in paint. There were often improvements in quality and savings in labor that contributed to that, sometimes some savings in floor space.

Q. At the time that you were ready to market the No. 1

or air-type system commercially, was there any specialized equipment required for that, aside from the standard compressed air spray guns, paint booths, and exhaust systems that had been available on the market?

A. Yes.

Q. What were those items?

A. Well, the principal specialized piece of equipment was the voltage pack; the original ones we used were entirely unsafe and we worked on them at considerable hazard for awhile until we would get something designed that would be in the range of safety.

Then there was a control panel that involved some standard pieces of equipment, that were fitted together for this specific use or for specific applications, and the electrode structure, that was the main ones.

Q. Now were those items available to the market generally at that time?

A. No, no, they were not.

Q. At the time that you were getting ready to market this process, I assume it was some time immediately before 1944, that was during the period of World War II, was it not?

A. Yes.

Q. Were there voltage supplies or power packs available generally on the market which were safe for the use of this process?

A. No.

Q. What did you do about that?

A. Well, we principally worked with the General Electric Company; we also had correspondence and some contacts with Westinghouse, their X-ray Division, and some of the other X-ray companies.

We were attracted more to General Electric; they seemed more interested in the possibilities of working with us. But we seemed to bog down to some very lengthy discus-

sions. They never did really design one for us in any detail. They did say they were capable of designing one and we got the feeling, finally, that it would take them six or eight months, maybe, to design them and pernaps ten months to deliver one. And so, we finally designed one ourselves with the help of Dr. Miller from Purdue.

Q. Did you then have some of those made so that you could—

A. (Interposing.) Yes.

Q. (Continuing.) —license others to use this process?

A. We had them made here by a local manufacturer named Darling.

Q. About how many did you get from him?

A. Initially I know it was four. I think we may have ended up getting maybe six or eight in total from him.

Q. Where did you get that type of safe pack after the order by Mr. Darling had been terminated?

A. We began building them ourselves.

Q. Did you continue to do that then?

A. Yes.

Q. Where did you obtain the control panels that you speak of that were necessary for this process?

A. We made them up ourselves; the first four were rather crude pieces, using standard equipment where we could, and some bakelite plastic mounting boards.

Q. Did you supply that then to your licensees along with the power pack?

A. Yes.

Q. And the electrodes?

A. Yes, the first few units.

Q. Licensing people to use the No. 1 Process, did you supply them the compressed air spray guns that were used with it?

A. We did only where it was necessary. During the war, we had very slow delivery on those, and we put in a

small stock of them to supply urgent needs, if someone was pressed for them, and as soon as deliveries became loosened up, we had them get them directly from one of the standard suppliers.

Q. Who were some of those suppliers from which you obtained these parts?

A. DeVilbiss, Binks and Pasche.

Q. From what general sources did your licensees from the air type system obtain their paint spray booths, exhaust systems, conveyors and so forth?

A. That varied considerably. As far as spray booths are concerned, the majority of them did get them from either Binks or DeVilbiss or from R. C. Mahoney, Ross Engineering—some of the conveyor and other people also supplied spray booths as well as the spray equipment manufacturers.

Q. Well, briefly, then, you supplied none of that to these licensees, do I state that correctly?

A. That is right. I think there might be one exception, for one local organization where they had a union problem, we did supply some sheet metal booths as an assistance to the customer. But we preferred not to.

Q. Now, subsequently, then, I understand that the so-called No. 2 or airless type process was developed by your organization and was commercially marketed?

A. Yes.

Q. What was the—strike that. Were there shortcomings of the air type electrostatic process which were overcome by the airless type to some extent?

A. Yes, the air type was never close to 100 per cent efficiency by any means, and on open objects like a bicycle frame or tubular furniture or automotive steering wheels or anything like that or small objects it was still very inefficient even with the electrostatic field. It required exhaust booths, sometimes water wash booths to trap the

paint over the spray, even with the No. 1 electrostatic spray.

Q. What efforts generally speaking did your organization make toward developing something that would obviate those deficiencies?

A. We made extensive efforts and continually have extensively. In those days we worked very hard to bring up the efficiency to a point where, to close up that large area of waste that was still evident in the number one process. We kept employed several people among them some graduate engineers working on it for quite a few years.

Q. What were the advantages of the No. 2 system over the No. 1 system?

A. The principal advantage, it eliminated air and made the electrostatic field the atomizing head and precipitating force without any other conflicting force on the air stream.

Q. To what extent, if any, did it eliminate undesirable over-spray?

A. Well, I would say on very few of our No. 2 process installations do we have more than two or three percent losses in paint on overspray.

Q. Was there any improvement with respect to the capital investment required of a manufacturer in other equipment?

A. Yes, it obviated the need for water spray booths, which are the most expensive kind of booths. They can cost, some of them, as much as $3,000 a lineal foot; and also greatly reduce the amount of air makeup that is required and saves considerable in heat loss and dirt, filtration of dirt, pressurizing of these chambers. It saved considerable in the other equipment that was required to work along with our electrostatic equipment.

Q. Was there any saving in labor in comparing the two systems?

A. Well, I would say no, it would be negligible or would be erratic, the difference in the two.

Q. Would that depend—excuse me.

A. (Continuing.) The only difference would be the closer control of the No. 2 than with the No. 1 process and particularly in the area of ventilation it was not sensitive to ventilation variances as the No. 1 process was.

Q. In some applications does the No. 2 system eliminate some of the hand touch-up by the means of air spray guns which you had found necessary in certain installations of the No. 1 system?

A. I think there are no doubt, no doubt were some instances of that kind.

Q. When did you begin the general marketing or licensing of the No. 2 system?

A. In 1951.

Q. Prior to that time had you licensed anyone to use the airless or No. 2 system commercially?

A. Yes.

Q. Will you state what that occasion was?

A. Well, the first one was in 1949 to Enamel Steel and Sign Company in Chicago.

Q. Under what sort of an arrangement was that?

A. Well, we gave him all of the help we could and all the technical advice and equipment we could. He was to supply us with all the information that he gained from any developments or ideas from it. An agreement was worked out between Ed and the owner on a consulting basis for his use of the equipment prior to our being prepared to launch it on him.

Q. When you refer to "the owner", who was that?

A. Kurt Simmons.

Q. And did he use the No. 2 system commercially at his establishment in Chicago following the execution of that agreement?

A. Yes.

Q. Now, at the time you became ready to market your No. 2 system commercially, was there any specialized equipment which was necessary for the operation of that process which was not available on the market?

A. Yes.

Q. Will you state what that was?

A. Yes, we needed the voltage pack again. By that time there were some voltage packs available which were designed for electrostatic spraying. We didn't consider them safe or adequate to our standards. Then there was an atomizing bell. The rotating means, insulator mounting. Those bells or discs. As we made more and more progress into the field of the No. 2 process and got more experience with it, we found various ramifications where variations from the standard equipment helped particular applications or coating of certain objects, there became a wide range of different types of atomizers and deflecting electrodes and so forth.

Q. Was there any problem with respect to the paint supply or control of the paint flow?

A. Yes, that became very critical because of the precise nature of the No. 2 process it was essential to control that and regulate it very closely and we had to develop a means of metering or feeding the paint with a high degree of predetermination, predetermined control.

Q. Now, those items not being available on the general market, what did you do about it?

A. We had hired engineers and worked on it until we had it developed ourselves.

Q. Did you produce them or have them produce some so you could produce to licensees?

A. With what elements were available on the market, speed reducers, motor drives, and then designed and incorporated, assembled it all, tested it out ourselves. Our intent was to make nothing that was readily available.

* * * * *

Q. Now, after a contact has been established with the prospect, either through advertising or through contact of your sales representative, if that prospect shows interest in your process, what happens next?

A. Well, a salesman will no doubt give him a brochure very early in the contact or if it is an inquiry through the mail, we automatically mail them back a brochure along with an invitation to look into it, if it is a likely prospect.

Q. When you refer to a brochure that your salesman gives to a prospect or that you mail to a prospect, are you referring to the advertising brochure such as has been identified as Plaintiff's Exhibit UUUU?

A. Yes.

Q. Is that the brochure which is currently being distributed with respect to the No. 2 process to all prospects?

A. Yes.

Q. After that contact and after the prospect has been furnished with the brochure, do you obtain any information from him as to his needs if he is interested in your process?

A. Yes, we attempt to get considerable information both as to his needs and quality requirements of his product, the amount of batching he can do of different colors or different sizes, shapes and parts. The different facilities he has available as to our requirements. We try to ascertain as much as we can so we can design a unit to best meet his needs.

Q. Do you ascertain among other things what sort of

paint mileage he has been getting with his existing system and method?

A. Yes, I would say that is the principal basis of our selling him. We have to know what mileage he is getting. Very often we know. Some of our more experienced sales engineers may know more about his probable mileage than he does himself. It is a very key point of our sales effort.

Q. Now, when we speak of "mileage", will you state what you mean by that?

A. We speak of it in the trade jargon roughly as meaning paint coverage. We think in terms of how much area a gallon of paint will cover as the mileage or efficiency of the application.

Q. Is that sometimes expressed in the number of manufactured units per gallon?

A. Yes.

Q. Now, when you have that information and that data from the prospect, what is the next thing you do?

A. Then we almost in all cases invite him to send samples of paint and parts to Indianapolis to our laboratories. After we receive them we run preliminary tests on them and when it meets with our approval we ask them in for a demonstration and to work for us a day or two on those parts.

Q. You use the actual parts or product that he is manufacturing and coating in his own plant, do you?

A. Yes.

Q. Whose coating material do you use?

A. Theirs.

Q. In other words, what he sends you or something exactly like it?

A. Yes.

Q. And do you simulate in your laboratory the condi-

tions that he has in his plant or which he is contemplating?

A. As long as we can. We often change. If he has a straight-line conveyor and water-wash booth, and we try to get him to put in a disk with a loop. But we try to fit it as closely with his present or contemplated conditions as possible.

Q. What does your laboratory do in the way of arranging or designing a system for this man?

A. Well, we have a variety of facilities at our sales laboratory and there we first demonstrate to him our ability to produce an efficient job with his paint and on his parts on the recommended kind of setup that we are recommending. Then if he gives oral approval of what we have done, or after his appropriate criticism of his and modification to fit his requirement, we make up drawings outlining what would be needed in the way of altering his present facility to accommodate our requirements.

Q. Now, do you use the same essential design or system for every prospect whose parts and material are sent to your laboratory for analysis?

A. No, that might even vary widely between the same product, depending upon the circumstances, conveyor speed, film thickness and other elements.

Q. Do you find those variables result in a considerable number of designs or applications that might be needed over a period of time to satisfy all prospects?

A. Yes, there is a very considerable number of different designs.

Q. And for what particular situation or for whose needs is the system designed or arranged which you demonstrate to the prospect?

* * * * *

A. Well, for anyone—I mean an automobile body would require an entirely different treatment than a hood or

fender, bicycle frame would require considerable different treatment than a refrigertaor and each different product or each different set of circumstances dictates the particular design that we recommend and that is modified depending upon the customer's stated wishes when he sees the demonstration.

Q. That is the customer comes to your plant then to see the demonstration?

A. Yes.

Q. You demonstrate for the same system you have designed for his needs on the basis of his product and his coating material?

A. That's right.

Q. Now, what is the fact as to whether the customer is at that time obligated to pay anything for demonstration or analysis?

A. He owes nothing if he does not sign an agreement.

Q. In other words, he is free to accept or, to reject the proposal at any time?

A. Right.

Q. And if he rejects it, he would not be obligated to pay for the demonstration or analysis?

A. That is correct.

Q. Do you make any computation for him of the results that he might expect if this system were installed in his plant in accordance with the design you have developed?

A. Yes, we try to give him pretty accurate mileage figures and we can measure film thickness for him and tell him the film thickness he will receive at that mileage and show him samples of the work, the quality, the appearance we can achieve and we can also run a test to give him a pretty close idea of the maximum quantity he can get from a given set of equipment.

Q. If he then shows an interest in the system and in-

dicates that he would like to consider it further, what is the next thing that your company does?

A. Well, we give him an oral proposal, probably discuss it with him in considerable detail on the day of his visit to Indianapolis and if he shows any interest or wants one, we give him an agreement for his consideration and signature.

Q. And how is the system which you have designed for him described in the agreement that you tender to him? By what means, in other words?

A. Oh, you mean—well, it has a drawing number on it. Is that what you mean?

Q. Is the drawing prepared of that system for him?

A. Yes, the drawing attends the agreement, and the agreement is a form of a proposal, in a sense, and the drawing and the agreement generally go out together, very frequently go out together.

Q. And in the standard form agreements, is there a blank space in which the drawing number is inserted?

A. Yes.

Q. That is the same drawing you are speaking of now?

A. Yes.

Q. Mr. Ransburg, in the event any prospective licensee would want a license under the patents that the defendant owns and which are applicable to the use of the process and apparatus which he is contemplating, and would desire not to take the Ransburg equipment, but to get his equipment somewhere else, what is the policy of the defendant?

A. The policy is to give him a non-equipment license agreement.

Q. And how long has that been the defendant's policy?

A. Well we have had, only had those agreement forms printed since 1953, but it has always been our policy to let them have it without equipment, if they wanted it.

Q. Has that policy changed at any time since the defendant was organized on January 1st, 1948?

A. No.

Q. Does the performance of the airless electrostatic spray coating process depend to any degree upon the particular equipment which the licensee is using for the purpose of painting his product?

A. Yes.

Q. Will you state briefly what the relationship is between performance and equipment?

A. Well, it is a difficult thing to generalize on because it could vary considerably, but the No. 2 Process equipment is a rather precision, has precision requirements to function with maximum efficiency. I don't know the degree of efficiency. I couldn't describe in general terms the degree of efficiency that would be lost for say careless or sloppy manufacturing, but even from the standpoint of improper installation on a mounting, it could completely alter the efficiency of the operation. If there was some leakage from—through the insulator to a slight degree, it could reduce the opertaing efficiency.

Q. From the time you started marketing the No. 2 System commercially in about 1951, up to the present, have you yourself made improvements in the equipment which is now furnished to your licensees when they desire it?

A. We are continuously making those improvements today, yes.

Q. And the equipment which you furnish today, does it work better than what you used to furnish several years ago for example?

A. Oh, yes, in many cases considerably better.

Q. So you have found from your own experience there is a relationship between the equipment which the licensee uses and the results he may expect under the process?

A. Yes.

Q. Now, when a prospective licensee is contacted and your sales representative considers whether your airless type process would be of any benefit to that manufacturer, does he proceed with his efforts to interest just every manufacturer that he contacts or does he use some discrimination in that respect?

A. He is charged with a very definite responsibility of interesting people that we can make satisfied customers and I mean by that all of our salesmen are fully aware of the importance of not installing units where they won't work productively and effectively and efficiently.

Q. If the sales representative reaches the conclusion that your process will not do the type of job for a prospect that you would like to see done with your process, what does he do?

A. They will very quickly tell them they don't think it is an application for them. Very often it will be said that we cannot do the job unless they make such and such and such changes, and we have flatly refused to assume that some jobs where a customer was fairly enthusiastic about it, who was expecting too much without adequate facilities for us, or under improper conditions, because we teach our salesmen, and they quickly learn from their own experience that we have to live with these jobs. It is not a case of a quick sale like an automobile or something. When we assume a job, we assume some responsibility of making sure that it operates.

• • • • •

Q. Now, as the Vice-President in charge of sales, were you familiar over the period of the defendant's existence and prior to that time when the partnership was operating this business, with the statements of policy of the defendant which were issued in bulletin form or otherwise with respect to the availability of what we will call non-equipment license?

A. Yes.

Q. Prior to the formation of defendant's corporation on January 21, 1948, what was the policy of the Harper J. Ransburg Company, the partnership, with respect to non-equipment licenses?

A. At least in one case I know we had offered to give them our equipment without service or licenses without equipment, if they wished it.

(The defendant, for purposes of identification, handed the Reporter a certain document for marking, and which was by said Reporter marked Defendant's Exhibit 23.)

Q. (By Mr. Gilliom.) Did you have a uniform policy at that time as to anyone who might wish a license without your equipment and installation, supervision and replacement part service?

A. We didn't have any printed form or contracts.

Q. I am not speaking of that. Did you have a policy as a partnership?

A. Our policy was we would have given that, if they wanted it.

Q. I will hand you what has been identified as Defendant's Exhibit 23, which bears the caption, "Bulletin No. 55, Harper J. Ransburg Company, August 29, 1947," and ask you just to state briefly for the purposes of identification what this is.

A. This is an announcement to the salesmen to make sure they were aware of the policy to be willing to supply a license if requested to do so.

Q. Were you in charge of sales for Ransburg partnership at that time?

A. Yes.

Q. And on or about that date, did you receive or did there come into your possession in some fashion a copy of that bulletin?

A. Oh, yes.

Q. Were you familiar with that bulletin before it was issued?

A. I was familiar with the policy. I can't say specifically I read the bulletin before it was issued.

Q. Is that a document which was prepared by the partnership and issued to its sales representatives and distributors in the course of its business at about that time?

A. Yes.

Mr. Gilliom: The defendant offers in evidence Defendant's Exhibit 23.

(DEFENDANT'S EXHIBIT 23 offered in evidence by Mr. Gilliom.)

Mr. Meroni: No objection, your Honor.

The Court: Exhibit 23 is admitted and read in evidence.

(Defendant's Exhibit No. 23 is admitted and read in evidence and made a part of the record in this case, said exhibit being in the words and figures following, to-wit:)

(Here Insert.)

The Court: Has this policy described in Bulletin No. 55, Defendant's Exhibit 23, Mr. Ransburg, been changed in any respect by the partnership there, or after or during the existence of the corporation, defendant, here?

The Witness: No.

(The defendant, for purposes of identification, handed the Reporter a certain document for marking, and which was by said Reporter marked Defendant's Exhibit No. 24.)

Q. (By Mr. Gilliom.) Mr. Ransburg, I hand you what has been designated Defendant's Exhibit 24 bearing the caption, "Ransburg Electro-Coating Corp. Bulletin, August 18, 1950" and ask whether, ask you to state for purposes of identification what that is.

A. This is just another reminder to all of the salesmen

and organization in general that it was our policy to license anyone who wanted a license for that equipment.

Q. Was that distributed to all distributors and salesmen at or about the date which appears thereon?

A. Yes.

Q. And did you, yourself, see or receive a copy of it at about that time?

A. Yes.

Q. And did it express the policy of the defendant corporation at that time?

Mr. Meroni: I object to that question, your Honor, as being a matter of opinion.

The Court: Read the question.

(The preceding question was read by the Reporter.)

Mr. Meroni: It seems to me it is self-explanatory, your Honor.

The Court: Overruled. You may answer that question.

A. Yes.

Q (By Mr. Gilliom.) And this was issued in the course of the defendant's business at that time to distributors and salesmen, was it?

A. Yes.

Mr. Gilliom: Defendant offers in evidence Defendant's Exhibit 24.

(Defendant's Exhibit 24 offered in evidence by Mr. Gilliom.)

Mr. Meroni: I object to it as being a self-serving document that was only used internally and was not circulated to trade.

The Court: Overruled. Exhibit 24 is admitted and read in evidence.

(DEFENDANT'S EXHIBIT NO. 24 is admitted and read in evidence and made a part of the record in this case, said exhibit being in the words and figures following, to-wit:)

(Here Insert.)

(The defendant, for purposes of identification, handed the Reporter a certain document for marking, and which was by said Reporter marked Defendant's Exhibit No. 25.)

Q. (By Mr. Gilliom.) Mr. Ransburg, will you please refer to what has been designated Defendant's Exihibt 25, bearing the heading "Ransburg Electro-Coating Corp. Bulletin 100, May 27, 1953," and state briefly for the purposes of identification what that is...

A. This was a bulletin sent to all of the salesmen so that they would be able to approximate or estimate the initial fees for the detearing process, the No. 1 process, the No. 2 process.

* * * * * *

(The defendant, for purposes of identification, handed the Reporter a certain document for marking, and which was by said Reporter marked Defendant's Exhibit No. 26.)

Q. (By Mr. Gilliom.) Mr. Ransburg, will you refer to what has been identified as Defendant's Exhibit 26, bearing the caption "Ransburg Electro-Coating Corporation, May 27, 1953, to all distributors" and state for identification purposes what that is?

A. This is a newly arrived pricing schedule to aid the salesmen in estimated quotations for the customers in the field along with license agreements that would apply to the detearing process with and without equipment, and I guess it is the No. 1 process with and without equipment, and the No. 2 process with and without equipment.

Q. And what—excuse me, had you finished your answer?

A. Yes.

Q. Was Defendant's Exhibit 26 distributed to all of the defendant's salesmen and distributors in the course of its business at or about the date of the exhibit?

A. Yes.

Q. Did you as an officer of the defendant receive or see a copy of it at about that time?

A. Yes.

Mr. Gilliom: The defendant offers in evidence Defendant's Exhibit 26.

(Defendant's Exhibit No. 26 offered in evidence by Mr. Gilliom.)

• • • • • •

The Court: 26 then will be admitted and read in evidence.

(DEFENDANT'S EXHIBIT 26 is admitted and read in evidence and made a part of the record in this case, said exhibit being in the words and figures following, to-wit:)

(Here Insert.)

• • • • • •

Q. Mr. Ransburg, I hand you what has been received in evidence in this case as Plaintiff's Exhibit JJJ-2, being a pricing guide for the No. 2 spray process, dated July 15, 1953, and ask you whether at about the time that date shows you received a copy of that bulletin or were familiar with it.

A. Yes.

Q. And to whom was it issued?

A. All of our salesmen and internal sales supervisory staff.

Q. And was it issued in the course of the defendant's business?

A. Yes.

Q. And did it express the policy of the defendant at that time?

A. Yes.

(The defendant, for purposes of identification, handed the reporter a certain document for marking, and which was by said Reporter marked Defendant's Exhibit No. 27.)

Q. (By Mr. Gilliom.) Mr. Ransburg, will you please examine what has been designated Defendant's Exhibit 27, bearing the caption "Ransburg Electro-Coating Corporation, Sales Bulletin No. 130" with the date May 13, 1954, and for the purposes of identification state briefly what that is.

A. Well, this is another reminder to the salesmen that anybody that wants it can have license without equipment and giving them a price or approximate price differentials for it.

Q. To whom was it distributed?

A. To all of our field sales engineers and inside sales supervisory staff.

Q. Was that in the course of the defendant's business at that time?

A. Yes.

Q. And I note that it bears your signature. I assume you were familiar with it and knew about it?

A. Yes.

Q. And did it state the policy of the defendant at that time with regard to the subject matter which is treated therein?

A. Yes.

Mr. Gilliom: The defendant offers in evidence Defendant's Exhibit 27.

(Defendant's Exhibit 27 offered in evidence by Mr. Gilliom.)

Mr. Meroni: No objection.

The Court: 27 is admitted and read in evidence.

(DEFENDANT'S EXHIBIT 27 is admitted and read in evidence and made a part of the record in this case, said exhibit being in the words and figures following, to-wit:)

(Here Insert.)

(The defendant, for purposes of identification, handed the Reporter a certain document for marking, and which was by said Reporter marked Defendant's Exhibit 28 in 13 pages.)

Q. (By Mr. Gilliom.) Mr. Ransburg, will you please refer to what has been designated Defendant's Exhibit No. 28, bearing the caption "Ransburg Electro-Coating Corporation Sales Bulletin No. 148" dated April 4, 1955 and state briefly for purposes of identification what that is?

A. This is a bulletin conveying some new license forms to the sales organization.

Q. To whom was it distributed?

A. To all of our sales force and supervisory staff.

Q. Did that include your sales representatives in the field?

A. Yes.

Q. I notice that in the salutation, after the word "To" there is a series of initials. To whom do those various initials apply, not naming them, but are those the people and distributors to whom you just referred?

A. Yes.

Q. Does that include all of them at that time?

A. Yes, I'm sure it does.

Q. Was this Exhibit 28 issued and distributed in the course of the defendant's business at that time?

A. Yes.

Q. Did you receive a copy or see a copy of it at about the date of the exhibit?

A. Yes.

Q. And did it express the policy of the defendant at that time insofar as the subject matter indicated therein is concerned?

A. Yes.

Mr. Gilliom: The defendant offers in evidence Defendant's Exhibit 28.

(Defendant's Exhibit 28 offered in evidence by Mr. Gilliom.)

Mr. Meroni: No objection.

The Court: Admitted and read in evidence.

(DEFENDANT'S EXHIBIT 28 is admitted and read in evidence and made a part of the record in this case, said exhibit being in the words and figures following, to-wit:)

(Here Insert.)

(The defendant, for purposes of identification, handed the Reporter a certain document for marking, and which was by said Reporter marked Defendant's Exhibit No. 29 in two pages.)

Q. (By Mr. Gilliom.) Mr. Ransburg, I will hand you what has been designated Defendant's Exhibit 29 bearing the caption "Ransburg Electro-Coating Corporation, Sales Bulletin No. 171" dated June 6, 1956, and will you please state briefly for identification purposes what that is?

A. This is a bulletin to all our sales organization.

Q. And to whom or to what group of people was it issued?

A. All of our field sales engineers and inside supervisory staff.

Q. I notice it bears the signature Harold P. Ransburg. Did you yourself issue that at about the date shown thereon?

A. Yes.

Q. Was that done in the course of the defendant's business at that time?

A. Yes.

Q. Does it express the policy of the defendant at that time insofar as the subject matter therein is concerned?

A. Yes.

Mr. Gilliom: The defendant offers in evidence Defendant's Exhibit 29.

(Defendant's Exhibit No. 29 offered in evidence by Mr. Gilliom.)

Mr. Meroni: No objection.

The Court: Admitted and read in evidence.

(DEFENDANT'S EXHIBIT NO. 29 is admitted and read in evidence and made a part of the record in this case, said exhibit being in the words and figures following, to-wit:)

(Here Insert.)

Q. (By Mr. Gilliom.) Mr. Ransburg, earlier in your testimony you referred to the fact that in seeking to interest prospective licensees in your airless or No. 2 process, it was the practice of your sales organization to mail or to hand the prospect the brochure describing the process.

A. Yes.

Q. Will you please refer to what has been received in evidence as Plaintiff's Exhibit VVVVV-1 which on the second page bears the designation "Copyright 1953" and state whether that is a brochure which was distributed by the defendant for the purpose which you have indicated at about that time.

A. Yes, it was.

Q. I will hand you what has been received in evidence as Plaintiff's Exhibit UUUUU, a brochure which on the second page bears the designation "Copyright 1956-1957" and ask whether that is a sales brochure with respect to the No. 2 process which has been used in the manner that you have indicated.

A. Yes.

Q. Is this exhibit, UUUUU, still in use?

A. I think it's been reprinted a time or two but as far as I can tell it's—I don't think there were any changes made in it of any consequence.

Q. In other words, the brochure which bears that gen-

eral format and coloring is in use at the present time as far as you know?

A. Yes, that is our current style.

Q. And did Plaintiff's Exhibit UUUU succeed Plaintiff's Exhibit VVVVV-1 for that purpose?

A. Yes.

Q. Subject to the reprinting you have mentioned?

A. Yes.

* * * * *

Q. Now, will you refer please to what has been received in evidence as Plaintiff's Exhibit IIII, a blue brochure, and I will ask whether that has been distributed by your organization at any time since the year 1953.

A. No. At the time of the green one there, VVVV—no. VVVVV, we discontinued distributing the blue one.

Q. Which is Plaintiff's Exhibit IIII?

A. IIII, that is right.

Q. Mr. Ransburg, at the time that the defendant submits to a prospective licensee the proposed license agreement for the airless process, by what means is that agreement transmitted to the proposed licensee?

A. By a transmittal letter.

Q. At the time that this transmittal takes place, has the proposed agreement been executed?

A. No.

Q. What is the process which is followed with regard to the execution of that agreement?

A. We send them four copies with a transmittal letter. They sign them, return them to us, and if we approve the agreement is signed and we return two copies for their file.

Q. Does the defendant execute or sign any of those copies in any manner prior to the time that the prospective licensee has signed and returned them to you?

A. No.

Q. Now, at the time that you—strike that.

Will you please refer to what has been received in evidence as Plaintiff's Exhibit BB-1 and state whether or not that is a typical transmittal of the proposed license form for an airless typ coating system?

A. Yes, it is.

Q. And since about what time has that particular form of transmittal been used?

A. I think about the spring of '53.

Q. 1953?

A. Yes.

Q. And what is the fact as to whether that is a uniform policy at this time and has been about that date in transmitting these proposed agreements?

A. It is a uniform policy.

Q. Now, Mr. Ransburg, with respect to the policy of the defendant in regard to what we have referred to as non-equipment licenses, will you state whether at any time to your knowledge the defendant has refused to quote to any person who has requested such a quotation terms for a license under Ransburg patents without equipment being furnished by Ransburg?

A. No, we have not refused, to my knowledge.

Q. Now, what is the fact first with respect to the No. 1 or air type process license agreements into which the defendant has entered as to whether all of them have or have not included a requirement that Ransburg furnish the specified equipment for the use of the process in the system?

A. We have several who have not required the equipment in some licenses.

Q. Will you state what exceptions there are insofar as general classes are concerned first?

A. You mean what ones did not include, take a license without equipment?

Q. For the No. 1 or air type process.

A. I know there were something like six or eight of them who had our equipment installed previously and wanted additional units installed in other lines or in other booths without equipment. We did license them without equipment.

Q. I will call your attention specifically to a situation which I think has been mentioned in depositions that are already in evidence, and that is the case of the Hilgren Manufacturing Company of Huntington Park, California. Are you familiar with that transaction?

A. Yes.

* * * * *

Q. And after this license was consummated, whose specialized equipment for the air spray process was Hilgren using under the terms of their license?

A. Ashdee's.

Q. Ashdee's?

A. Yes.

Mr. Gilliom: The defendant offers in evidence Defendant's Exhibit No. 30.

(Defendant's Exhibit No. 30 offered in evidence by Mr. Gilliom.)

Mr. Meroni: No objection.

The Court: Admitted and read in evidence.

(DEFENDANT'S EXHIBIT NO. 30 is admitted and read into the evidence and made a part of the record in this case, said exhibit being in the words and figures following, to-wit:)

(Here Insert.)

* * * * *

Q. Now, have there been to your knowledge any requests for prospective licensees of the No. 2 Process for a quotation of the terms under which you would grant them

a license to use the No. 2 Process for equipment without Ransburg equipment?

A. There have been a very few.

Q. Will you state when those requests were received or approximately when, if you recall, and by whom?

A. Well, I would expect that most of them were received by John Maxwell, or do you mean by which companies requested it?

Q. Will you state those that you know about and then we will pin them down as to time as well as we can.

A. Webcor is one that asked for a quotation.

Q. Now, do you know the full name of that company?

A. Webster—I am sorry, I don't.

Q. Is that Webster Chicago Corporation, located in Chicago, Illinois?

A. Yes, it is in Chicago.

Q. Now, was that a request for specific, a specific location or was it an inquiry that was more limited than that, if you know?

A. I am not sure. It may have been more limited than that.

Q. My question a moment ago was directed to any situations that you know about where a prospective customer asked for specific quotations as to initial fees and monthly fees which would apply to No. 2 System licenses without your equipment.

A. I know that General Motors asked for one.

Q. And what happened with respect to that request?

A. We gave them a quotation and heard nothing further from it.

* * * * *

Q. (By Mr. Gilliom.) Mr. Ransburg, with respect to the specialized equipment which is furnished under your standard license agreements to licensees of the No. 2

process and system, will you state whether that equipment as a whole or as a combination has any substantial use other than for the electrostatic spray coating which is contemplated by that license?

A. No, it has not.

Q. Does the defendant, or has it at any time during its existence had a policy publicizing the initial and monthly fees which it charges for the use of the No. 2 or airless system in advertisements in trade magazines or otherwise?

A. No.

Q. Does it or has it ever published those fees applicable to these various installations in any of its sales brochures or literature?

A. No.

Q. Under what circumstances does it quote its initial and monthly fees?

A. As far as definite quotation, it has only after running the samples and tests and designing the equipment specifically required for that operation.

Q. Prior to that time, did the sales representatives in the field or in the office give any indication to a prospective licensee as to what the fees are or may be?

A. Yes, they can estimate it rather closely.

Q. On what occasions do they do that?

A. Well, on the occasion when a customer asks them for such a quotation and they have shown some real consequential interest. That would also require that prior to any quotation they would have mentally and tentatively designed the equipment roughly in their mind as to what might be involved.

Q. Mr. Ransburg, to your knowledge has anyone at any time requested that the defendant grant to him a license under any specific patent or patents exclusive of others, to use the airless or No. 2 type process in industrial coat-

ing, and I am distinguishing now between any request for a license to make and sell equipment?

A. No, I am confident they have not.

Q. Mr. Ransburg, you were a member of the partnership of Harper J. Ransburg Company in the year 1943, were you not?

A. Yes.

Q. Were you aware of the purchase by the partnership at that time of what has been referred to in these proceedings as the Pugh patent?

A. Yes.

Q. Do you recall from whom that patent was acquired?

A. From Western Electric.

Q. At the time that the patent was—prior to the time the patent was acquired and during whatever negotiations took place, were there some conversations among the partners with respect to that?

A. I am sure there was.

Q. Were you familiar as a member of the partnership with the reason and the purpose for which that acquisition was made by the partnership?

A. Yes.

Q. Will you state the purpose for which the Pugh patent was acquired as you understood it at that time and as you understand it now?

A. Well, the Pugh patent had some rather broad claims that definitely, according to our counsel, read on our system of patent spraying. We were anxious to remove any roadblocks from our path and any hazards that any customers we might get might have in it; we also had the feeling that it having never been used, we might be able to negotiate a deal on rather reasonable terms with Western Electric and authorized our attorney at that time to negotiate with them for us.

Q. Who was your attorney at that time?

A. Ralph Lockwood.

Q. When you say that you wanted to remove road-blocks, I think you used that expression, what particular activity of yours are you speaking of, that you wanted to clear the way for?

A. Electrostatic spray coating.

Q. Of what type?

A. Of the air type.

Q. And was the—strike that. Did you have any other purpose in acquiring the Pugh patent from the Western Electric Company?

A. No.

Q. Now I would like to ask you a few questions with respect to the agreement into which the Harper J. Ransburg Company ultimately entered with the Behr-Manning Corporation which has been received in evidence in this cause as Plaintiff's Exhibit UU.

The Court: Mr. Witness, I have forgotten here, and I am trying to make some notes.

Did you say that you bought the Pugh patent in order to develop the air spray system or the electrostatic system?

The Witness: In order to—I think we had—it was air electrostatic spray, what we call our No. 1 System.

The Court: The No. 1 System, you bought it at that time?

The Witness: Yes. Now in order to develop it—we had developed our system, but were advised that the Pugh patent had some claims reading on that.

Q. (By Mr. Gilliom.) When you say you were advised along that line, Mr. Ransburg, by whom do you mean?

A. Mr. Lockwood.

Mr. Gilliom: Your Honor, I am going to ask the witness some questions with respect to Plaintiff's Exhibit No.

PPPP and we have only our file copy which I would like to hand to the Court for purposes of reference.

Q. By Mr. Gilliom.) Mr. Ransburg, referring to Plaintiff's Exhibit PPPP, which has been received in evidence in this cause, will you please look at the first page of that exhibit which appears to be a letter on the letterhead of Behr-Manning Corporation, dated November 22, 1940, addressed to Mr. Harper J. Ransburg Company, and state whether you recall the partnership receiving that letter from Behr-Manning Corporation.

A. Yes, I certainly do.

Q. Following the receipt of that letter, did the partnership have any conferences with respect to the subject matter of the letter, without stating what was said?

A. Yes, we did.

Q. And did you have some contact with Behr-Manning representatives pursuant to the suggestion in their letter?

A. Yes.

Q. Now, will you refer, please in Plaintiff's Exhibit PPPP to the letter which is dated July 3, 1944, addressed to Mr. E. C. Schacht and signed Harper J. Ransburg Company with the initials HPR at the bottom and state whether you wrote that letter to Mr. Schacht?

A. Yes I wrote this letter. Yes, I wrote this letter.

Q. I note that the first letter preceding your letter to Mr. Schacht of July 3, 1944, or I should say, the last letter preceding it, is the page immediately preceding that, which is a letter dated May 20, 1941. Will you state briefly whether any negotiations were taking place between Ransburg partnership and Behr-Manning Corporation in that interim from 1941 to your letter of July 3, 1944?

A. No. I believe there were no negotiations during that period. I know there was a substantial gap in our negotiations.

Q. Now, will you please refer to Exhibit PPPP to a

telegram dated August 10, 1944, bearing the signature "Ralph G. Lockwood" and addressed to Harper J. Ransburg Company? Do you recall the partnership receiving that telegram from Mr. Lockwood?

A. Yes.

Q. And were you familiar with the substance of that telegram at or about that time?

A. Yes.

Q. Now, in the early part of 1941 and prior to the time that you wrote your letter to Mr. Schacht of July 3—I beg your pardon. Strike that question, please.

In the early part of 1944 and prior to the time that you wrote your letter to Mr. Schacht of July 3, 1944, will you state whether or not the Ransburg partnership had licensed any manufacturers to use the No. 1 air type electrostatic process?

A. Yes, we had licensed several.

Q. Did those licenses contain provisions indemnifying the licensee against patent infringement?

A. The original ones contained full indemnification against patent infringement.

Q. That was true as to those entered in the year 1944 to which you refer?

A. That is right.

Q. At the time that you were negotiating with Behr-Manning Corporation in the transaction which ultimately resulted in the execution of Plaintiff's Exhibit UU, the agreement with that corporation, was Behr-Manning Corporation engaged in any way in manufacturing or marketing electrostatic spray painting equipment or systems?

A. No.

Q. Was the Ransburg partnership, Harper J. Ransburg Company, engaged in any way in manufacturing abrasive or flock coated articles?

A. No.

Q. I think you stated that the partners had conferences and conversations with respect to this original Behr-Manning letter which was received in 1940 and were you as partners informed among yourself as to your concerns with respect to the Behr-Manning situation and the negotiations which ultimately resulted in the execution of Plaintiff's Exhibit UU?

A. Were we what?

The Court: Read the question.

(The preceding question was read by the Reporter.)

A. From the very outset we were very concerned after receiving this first letter from Mr. Schacht that I interpreted, I believe we all interpreted, as somewhat threatening and certainly threatening the entire position we were all developing in electrostatic painting field.

• • • • •

Q. (By Mr. Gilliom) Did the partners prior to the execution of the Behr-Manning agreement, which is Plaintiff's Exhibit UU, determine among themselves that they would enter into that agreement for the purpose of eliminating whatever concern you have discussed?

• • • • •

A. Yes, we did.

Q. (By Mr. Gilliom.) Will you state what the purpose of the Harper J. Ransburg Company was in negotiating and entering into Plaintiff's Exhibit UU, the agreement with the Behr-Manning Corporation?

• • • • •

A. We wanted to remove this roadblock which was almost synonymous to—obstacle which was almost synonymous to Pugh in that they owned a patent which Pugh's issued patent showed it had been disclaimed, one or two claims, and it was that obstacle we wanted to overcome to our own marketing of our process, plus the saving of any hazard of litigation or trouble to our prospective users.

Q. You made reference to one patent with respect to which I think you said a couple of claims were disclaimed. Do you remember the name of the patent?

A. Yes, that was the Smyser Patent.

Q. Did your corporation, did your partnership have any other purpose than the one which you have stated in negotiating and entering into the Behr-Manning agreement?

A. No.

Q. Mr. Ransburg, do you recall the defendant Ransburg Electro-Coating Corporation entering into an agreement in 1948 with Research Corporation?

A. I recall there was one, yes.

Q. And do you recall the circumstances which led up to the execution of that agreement?

A. I think Ed would be better qualified to give the details. I recall a few generalities.

Q. Just state what you recall about it and if that is incomplete, we can ask your brother about it.

A. I recall that there was one patent listed by Behr-Manning in the cross license agreement which they thought at the time they had rights under from the Research Corporation. It turned out later they did not have those rights under this particular patent and it was an inadvertence on their part we relied upon and we had given on an occasion or two a list of the patents that we had rights under to customers of ours who were relying upon license rights under a patent we had no license rights under, through the inadvertence of Behr-Manning.

Q. And did you then enter into negotiations with Research Corporation for the purpose of acquiring those rights?

A. That is right.

Q. Did the corporation at that time have any other purpose in entering into the agreement with Research Corporation?

A. No. We felt rather heavily compromised at that stage in having purported to customers that we had license rights under a patent that we found out later we didn't have license rights, too, so we were earnestly endeavoring to acquire those rights, and that was the major purpose. We said we had rights and found out later we didn't have.

Q. You used the term "major purpose". Was there any other purpose that you know of?

A. I don't think so.

Q. I would like to ask you a few questions, Mr. Ransburg, with respect to the use of your airless and air type electrostatic spray painting systems and the relationship of that use to other painting methods which are available. First of all, is there any article that you know of in your experience with electrostatic spray painting systems which can be coated by means of the airless or No. 2 System which cannot be coated by some other means?

A. I know of no such article.

Q. What are some of the other methods by which those articles can be coated and are coated industrially?

A. Most common ones are the conventional hand air spray, automatic air spray, flow coating and dipping, roller coating—

Q. (Interposing.) Can they also be coated by the air type electrostatic air spray system?

A. Yes.

Q. What is the difference essentially between coating with your airless or No. 2 System and any other system you have mentioned?

A. The principal general difference is the difference in painting efficiency, paint mileage.

Q. That is reflected in what, so far as the manufacturer is concerned?

A. The cost of paint used.

Q. Is there any other substantial difference between the use of the No. 2 System and these other systems?

A. If substantial means a great difference or large difference, I would say no, in a general way.

Q. Now, when you are attempting to market your airless or No 2 System to prospective customers, what is the fact as to whether your sales representatives and your distributors compete with these other methods of industrial painting?

A. We have always considered that we compete with any other method of painting. It is our problem to convince someone we have a better method of doing it than several other ways that they can accomplish the same end.

Q. I take it from the number of licenses you have negotiated, as is shown by the exhibits which have been received in this case, in many instances your representatives are successful in negotiating agreements for the No. 2 System?

A. Right.

Q. Are there any situations in which your representatives are not successful in doing that and lose out to competing forms of industrial painting or coating?

A. Yes.

Q. What type of methods do they lose out to on these occasions?

A. Well, I can think of one case that used flow coating instead of our process that we were recommending. There have been several that have used what we call the one-half system which is another airless electrostatic—

Q. (Interposing.) Do you mean—

A. (Interposing.) I mean air electrostatic painting system.

Q. Marketed by—

A. (Interposing.) There are—

Q. (Interposing.) Other firms than yourself, than yours?

A. Yes. Those are the principal ones. Of course, we sometimes lose out to an ordinary conventional air spray gun for various reasons.

Q. Now, do any other persons who have taken licenses for your airless or No. 2 System have in their plants other types of industrial coating as well as your own?

A. Yes, there are. A great number would have other types of industrial painting equipment. Most of them would have in fact.

Q. What kind of equipment do you mean?

A. Most of them would have a dip tank or many of them would have a dip tank doing some small part, or flow coating system putting on a prime coat or air guns. There are several that have other electrostatic units as well as ours in the same plant.

Q. You mean of the air type furnished by other suppliers than yours?

A. Yes.

Q. Now, are there any instances in which users of your electrostatic coating systems have terminated their agreements with you and have retained or taken on competing types of systems?

A. Yes, there are some.

Q. And in that instance, what type of system has the manufacturer substituted for yours that you know of?

A. The air type.

Q. Electrostatic?

A. Air type electrostatic, yes.

Q. And, of course, I assume that in those cases that equipment is furnished by someone other than Ransburg?

A. Yes.

Cross-Examination by Mr. Meroni.

Q. Mr. Ransburg, when did you say you or your company or partnership first marketed or licensed or leased a No. 1 air type electrostatic system?

A. It was early in 1944.

Q. By that time you had licked the problem of a satisfactory power pack, from your standpoint?

A. Yes.

Q. And, as I understand your testimony, in 1944, others were then manufacturing packs that could be used, too?

A. Not to my knowledge.

Q. Well, you did obtain some from Darling, did you not?

A. Oh, yes.

Q. That is an independent company, isn't it?

A. Yes, it was the local company that built the packs to our design.

Q. Well, did they sell those packs to other people, too?

A. No.

Q. They sold them only to you?

A. The packs that we designed?

Q. Yes.

A. Yes.

Q. Did they make and sell any power packs that could have been used in an electrostatic system as far as you know?

A. As far as I know, not with complete safety.

Q. Well, that is a matter of degree. They could have been used with less safety, is that it?

A. Yes, right.

Q. What do you mean by "safety"?

A. Well, I mean both personnel, safety to personnel and safety from fire hazard.

Q. Can you explain that more in detail from the standpoint of what is involved in the pack in that regard?

A. Yes, the higher the available current, the more lethal or the more possibility of a lethal shock becomes, and the higher the available current from a short on the high voltage circuit, the more heat is generated and the more likelihood of a fire when it is around combustible materials.

Q. Then you wanted a power pack that would give you the high enough voltage but with a minimum amount of current?

A. Right.

Q. Now at the time that you came out with this No. 1 System in the forepart of 1944 had you licked the problem of a feed for paint?

A. To a satisfactory degree for the moment, yes.

Q. Had you also licked the problem of a regulator?

A. Well, that is a matter of degree, and I would say we are still attempting to improve it.

Q. But you had one that you considered sufficiently good that you commercialized?

A. It was commercially usable, yes.

Q. So that you would you say that before September 29, 1944 which, incidentally, is the filing date of the Starkey patent here in suit, you had already available a satisfactory power pack and a satisfactory feed device?

A. Of course, when you say it was satisfactory, it was satisfactory to those customers to whom we sold it, naturally.

Q. By "satisfactory" I mean one that was good enough for you to sell to customers?

A. Yes.

Q. You also by that time had a pack that was good enough to license or lease to cu mers for your detearing process, did you not?

A. Yes.

Q. When did you first notice others coming into the field with an air type electrostatic coating system?

A. Well, I think it was probably around—somewhere around 1950-'51.

Q. Was it after the Pugh Patent expired?

A. I believe the Pugh Patent expired in '48 or '49.

Q. So it was after that?

A. Yes, I think so.

Q. And do you recall whether it was after the expiration of the Smyser Patent?

A. Yes, I believe the Smyser Patent expired before the Pugh, did it not?

Q. We can check in a minute. I think that is correct.

* * * * *

Q. Were you aware of the fact at the time of the initiation of this correspondence with Behr-Manning that they were already well established and entrenched in the electrostatic field with particular regard to sandpaper and this fabric that they are referring to?

A. I knew they had done some work in that field, yes.

* * * * *

Q. Did you ever become familiar with the development work that they had done in the paint field?

A. Yes.

Q. Well, tell us what it was.

A. Up to the time of the writing of this letter in 1940, it was nothing.

Q. Well, what did you learn about it, if it was later?

A. Well, in our first meeting with Elmer Schacht and two other gentlemen from Behr-Manning who came out to Chicago, I just flatly asked them if they had worked with electrostatic precipitation of liquids and Elmer Schacht admitted they had not. He was their principal inventor, I believe.

* * * * *

Q. Well, then they never did apprise you of the fact they had been doing any development work in the liquid coating field?

A. They told us in '40 or '41 in our first meeting they had not done any in the liquid coating field.

Q. Did they tell you at a later date they had?

A. I know, yes, they did afterwards.

Q. When they did what did they tell you?

A. Well, they either borrowed or rented some equipment from us. I think we may have loaned it to them for work in liquid coating. I don't know what they did with it. Some of our people may have worked with them on it.

• • • • •

Q. Were they under a license arrangement with you at that time or was it just a loan or sale, or what?

A. Yes, after our license arrangement.

Q. I beg your pardon?

A. That was after our license arrangement.

• • • • •

Q. Now, I hand you what purports to be a pricing guide for your No. 2 System dated July 15, 1953, marked JJJ-2. Is this the first pricing guide that you sent out in connection with the No. 2 spray process wherein you spelled out to your distributors the difference in fees where equipment was supplied and where equipment was not to be supplied?

A. I recall that there was one earlier than July of 1953.

Q. We haven't seen any here. You say there was one earlier than that where you divided it in that fashion?

A. Not in that fashion because the earlier one, as I recall, related to the detearing process, and the No. 1 process.

Q. This is limited to the No. 2 process? As far as the No. 2 process, I believe this is the first bulletin you sent out? Am I correct in that?

A. I believe that is correct.

Q. Now, in this typical example here, if the customer wanted equipment he would pay an initial fee of $10,000 and a basic monthly fee of $200, monthly fee, 25 per cent

of the cost of coating material used, is that correct, in that typical example?

A. Yes, in the case of our supplying the equipment.

Q. Now in that same example where you didn't supply the equipment, the customer would still have to pay a basic initial fee of $4,000 for the license, and a basic monthly fee of $140, is that correct?

A. That is correct.

• • • • •

Q. Do you recall if you had the licenses with Behr-Manning or executed them, having any correspondence with them at all?

A. I think we have received some correspondence, yes.

Q. Well, you had some in connection with that patent under which Behr-Manning inadvertently gave you rights and you had to go to Research Corporation to get the rights?

A. Yes, I am sure we had some correspondence on that.

• • • • •

PLAINTIFF'S EXHIBIT LLLLL.

• • • • •

BURKE BERNARD ROCHE, called as a witness herein on behalf of the defendant, having been first duly sworn, was examined and testified as follows:

Direct Examination by Mr. Hume.

Q. Will you give your full name, Mr. Roche?

A. Burke Bernard Roche.

Q. Where do you reside, sir?

A. Oak Park, Illinois; 333 South Oak Park Avenue, Oak Park, Illinois.

Q. And your age?

A. 43.

Q. What is your occupation, sir?

A. The president of the Binks Manufacturing Company.

Q. How long have you been president of the Binks Manufacturing Company?

A. Since April, 1949.

Q. What is the business of the Binks Manufacturing Company?

A. The Binks Manufacturing Company is engaged in the manufacture of spray painting equipment in spray finishing systems.

Q. How long have you been employed by the Binks Manufacturing Company?

A. Since 1939.

* * * * *

Q. Let me start over again.

Instead of speaking of divisions, let's find out first what products are made by the company. We will just speak about products. Can you give me some idea of the various products that are made?

A. Yes. I could start off by saying that we basically have two lines of equipment in so far as our spray painting equipment is concerned, which is our principal business there, principal products—we have a few side lines which I can enumerate after I am through with the spray painting products.

First of all, we have our standard equipment, our catalog line, and that includes numerous items, the most important of which are paint spray guns, oil and water extractors, pressure tanks, all sizes of cups, containers for paint; rubber hose, both material and air hoe; hose connections. We have a line of material handling pumps, air compressors, all types and sizes.

I would say those were the principal items in our stand-

ard equipment line. There are many more, but those are the main ones.

Q. That is the standard equipment line or the so-called catalog line, you say?

A. Yes.

Q. You first said that you have two lines of equipment. Is the standard equipment one of those two lines?

A. That is right.

Q. What is the other of those two lines?

A. The other one is the industrial line.

Q. The industrial line?

A. Yes.

Q. This is to be understood in contradistinction to your standard equipment line?

A. Yes. I wouldn't say that they don't overlap, but if I am going to make a distinction, I would have to do it in this way. They frequently overlap, of course. But the industrial line consists of spray booths, water cooling towers, paint circulating systems, exhaust systems, air supply systems, and sometimes, I would say, complete finishing systems. We have to collaborate with other firms to furnish other equipment which we do not manufacture, which would include such things as ovens and bonderizers, which are not of our manufacture, but some customers today demand a so-called turnkey job. You will have one contract, you might say, to furnish all of the equipment.

Q. Just so I get the benefit of what you are telling us, you used the expression "turnkey job." What do you mean by that?

A. A package job, you might say, where one contractor, one firm, would furnish everything that would be required to integrate a paint finishing system.

Q. That is a kind of a job that you might take in your regular course of business?

A. We might take, yes. We don't usually take them, but occasionally we have on request of a customer.

Q. In that event, you would do what in order to get that equipment which you do not actually make?

A. You might say we would act as the prime contractor on the job, and we would have suppliers who would furnish the equipment that we do not manufacture.

Q. Are there any other major items that come under the industrial line, other than the ones you have named?

A. I believe I have mentioned the principal ones. There is one more that I didn't mention that we also make, that is, automatic paint machines.

Q. In order to get a little better idea of this, I am going to run through some of these items and ask you how these pieces of equipment are used, in what kind of operations and what kind of customers you sell.

You first said that under the heading of standard equipment you make paint spraying equipment. What is included in that?

A. Under the items listed in the standard equipment?

Q. Yes.

A. Well, almost everything I mentioned as far as the paint spray equipment is concerned, I mean, if you want a list of what would be essential for paint spraying, all those items could be classified as paint spray equipment because they are for the use of paint spraying.

Actually what would be required, if we decided to spray anywhere in the factory, you would need a spray gun with both air and material hose, and of course you would need a paint container, either the pressure tank or the cup which I mentioned, and usually you also need a regulator, air regulator to regulate the flow of air and the air pressure.

Q. These items in the spray paint section of your business include air guns, is that right?

A. We have some air guns in the line—just a moment—what do you mean by air guns?

Q. I mean compressed air paint spraying guns. That is one of your items, isn't it?

A. Oh, yes. When you said air guns, I thought you were talking about a gun for spraying air. We also have blow guns, as we call them.

Q. But these systems that you have been testifying about which come under your standard equipment line are paint spraying systems which include compressed air paint spraying guns?

A. Well, yes. The paint is atomized by means of compressed air.

Q. Is that characteristic of all of the systems in the painting field that Binks has been selling in the past?

A. Yes, it is.

Q. What are oil and water extractors used for?

A. Oil and water extractors, usually the air line gets some impurities or foreign matter, and that has to be extracted so that you will get a supply of clean air to the gun. So that is what it actually does, it extracts the impurities and foreign matter from the air stream.

Q. Here again, this is a part of what we might call a compressed air paint spraying system?

A. That is right, as applied to the equipment that you are mentioning now.

Q. Yes. Are oil and water extractors used for anything other than paint spraying systems?

A. Well, it is possible that they are, but that is their function. That is why we have them. That is their function. As far as the other uses are concerned, I am not acquainted with that.

Q. That is what you have it in your line for and that is what you sell it for?

A. That is right.

Q. How about your pressure tanks? Is that also an item of the compressed air spray paint system?

A. Yes, it is.

Q. All of these other items that you have mentioned under the heading of your standard equipment line are all parts of the compressed air paint spray system?

A. That is right, as applied to the standard equipment that we are talking about at the present time.

Q. So that we might say under the standard equipment line that that entire line of products are all sold as a part of systems for spray painting with compressed air guns?

A. The standard equipment line that I have mentioned, it is all used compressed air is essential to its use.

Q. All of those elements or parts or pieces of equipment are part of that kind of a system, namely, a compressed air spray painting system?

A. Yes, they are all components.

Q. Under your industrial line, what are your spray booths used for, if you will tell us, please?

A. The spray booths are used to exhaust the paint fumes from the factory, or wherever they are located. In other words, the spraying has to be done in a localized area so the use, that is, the safety engineers require that spraying be done in a closed area and that the paint fumes be exhausted so that the noxious fumes won't get out into the rest of the plant and be a health hazard, and so forth.

Q. They provide a housing in which the painting operation is conducted?

A. That is it.

Q. Do they provide a housing for any other operation other than painting?

A. No, they are primarily for painting.

Q. What is the cooling tower used for? Water cooling tower, I think you said.

A. Water cooling towers are used in conjunction with air conditioning installations, refrigeration installations, primarily for the purpose of conserving water because the water constantly recirculates so you don't have to waste the city supply.

Q. Does this item, namely, water cooling towers, have anything to do with painting systems?

A. It does not.

Q. Paint circulating systems, I guess, are confined in their use to painting systems of the type you sell, namely, compressed air gun systems, right?

A. Yes, that is right.

Q. What are exhaust systems?

A. Well, the spray booths, there has to be a movement of air within a spray booth in order to carry away the paint fumes, and consequently in the larger plants that would take so much of the heated air away from a plant that very often it is necessary for a plant to spend a considerable sum of money in providing an air makeup or supply system. Of course, if you provide a special air makeup or supply system, you also have to exhaust it. In some of the larger plants where the booths are large, that can get very complicated, and it requires both a large air makeup and air exhaust system to handle the flow of air in a spray booth.

Q. And that is what your air supply systems are used for also, I take it?

A. That is right.

Q. So that the exhaust systems and the air supply systems which you mentioned are really a part of the spray booth mechanisms that you sell, is that right?

A. Yes, they are, with the larger booths usually.

Q. Are they used for anything other than spray booths for painting systems? Do you sell them for any other usage?

A. We primarily use them for spray painting. There are a few related uses, I think sometimes for soldering booths in automotive plants.

Q. Would it be fair to say that is a minor part?

A. I think that would be minor.

Q. I was interested in your reference to this turn-key method of selling or package selling. What is your normal method of selling equipment?

A. Our normal method is merely to sell our own items that we manufacture or assemble ourselves.

Q. What would be a typical method of doing business for a company that wanted to install a compressed air spray painting system? Would you be in the market for that kind of an order?

A. I certainly would be.

Q. What would be a typical operation, what would you sell and what would you supply in conjunction with that kind of a customer?

A. Are you talking about an industrial customer now?

Q. I was just trying to get some idea of the extent of your participation in supplying equipment to a customer. For instance, we will assume we had a customer who wanted to install a compressed air spray painting system. Would you be in the market to supply him, and what would you quote to him, and what would be the typical method of operating with a customer of that kind?

A. Well, it could happen in many different ways. The customer could write in, first of all, and say he needs some paint spray equipment, and we would send a salesman out to determine his requirements. Then after the salesman determines his requirements, it depends on what the man is spraying, of course, then we would submit a quota-

tion with our catalog prices, unless some special items were involved. It would depend on what the man needed, the customer needed.

Q. In a typical operation of that kind, a typical installation, say, for painting some household object, ordinarily would a spray booth be needed as an item in the system?

A. You mean as far as a hobby around the house?

Q. If your customer was going to install a system, would a typical system for using your compressed air equipment require a booth, for instance?

A. That might depend on where the customer was located, depend on the state laws, and all, regulating the use of spray equipment. Some states have industrial commissions, and they are very strict. I mean, almost any commercial establishment would have to have a spray booth.

There are various types of spray booths, too, like the dry type or water washed type. The dry types are less expensive. Some states, it is getting more rigid and strict all the time. As far as using it, if you were going to buy a spray gun for home use or farm use, a spray booth rarely is bought because a lot of times you would be doing your spraying outdoors and you wouldn't be getting in anybody else's way.

Most commercial establishments and industrial establishments have spray booths.

* * * * *

Q. Do you know when your company first got into the paint spray business?

A. How far back would you like me to go?

Q. I would just like to get some idea of the age of your company in this spray paint field, something of the stature and background of your company in that field.

A. Yes.

Q. When did your company really get into that business, the spray paint field?

A. Briefly, if I could just give you a brief resume of it—

Q. See, Mr. Roche, this is all known to you but we are on the outside looking in. We don't know your company like you do and we are trying to get an idea of what the history of this company has been.

A. Well, the Binks Manufacturing Company is a pioneer in the spray equipment industry. Originally it started, in 1892, as the Star Brass Works and I know that in 1893 the buildings down at the Columbian Exposition in the first World's Fair in Chicago were whitewashed by means of the spray gun that was made by the Star Brass Works. They operated until around 1914 and at that time, I believe, if my memory serves me right, it was changed to the Binks Spraying Equipment Company. That might not be the exact name, but shortly after that, the Binks —well, at that time I presume the Binks family got into the business. They were a family that lived here in Chicago out at Oak Park. They operated the business until 1929, at which time the company was reorganized and at that time it was called—at the time of this reorganization, it was called the Binks Manufacturing Company.

You might put it this way: That the present management, because I represent a continuation of that name, has run the company since that time.

Q. Now all during that time, you might say throughout the entire history of the company, they were selling these compressed air paint spray guns, were they not?

A. Yes, as far as I know. As least to my knowledge, so far as I could go back with it, yes.

Q. And didn't they also, let us say, from 1929 then,

sell all the equipment that went with the gun to constitute a complete system?

A. Basically, yes.

Q. And that would include spray booths, for instance?

A. So far as whether we had then actually sold spray booths in 1929, I couldn't give you an accurate answer, but I do know that as early as in the '30's that the company started to sell spray booths. It is possible before that they did too.

Q. And how about the other equipment that was used, such as hoses and connections, that was all a part of the—

A. That was part of the standard equipment line.

Q. —of your line at that time, wasn't it?

A. That is right.

Q. And pressure tanks?

A. Yes.

Q. These oil and water extractors, they were sold way back in the early history of the company, weren't they?

A. Well, if you just go back to 1929. Before 1929. I would know very little about that.

Q. But they were sold as early as 1929?

A. Yes.

Q. And the pumps that went with those systems?

A. Well, now if you are talking about the material handling pumps that I believe I mentioned, that line is relatively new. We have only had that in the line for about two years. That is a new product.

Q. Well, all these items that you have enumerated here as being a part of your standard equipment spray painting line, those items, to the extent that they were used in spray painting or are used in spray painting, were sold by the Binks Company in its back history?

A. That is right. There were changes in its equipment, but the line was standard. They were sold as far back as I remember.

Q. We are justified in saying, then, the system with all these various component parts as it exists today, except for modifications and improvements, was about the same as the system for painting back in 1929 or in the early '30's, isn't that right, so far as having a large number of different parts is concerned, like booths and hoses?

A. Basically, I think that would be correct.

Q. When did your company, so far as you know, first become acquainted with the techniques of electrostatic painting?

A. As far as I can remember, we first became interested in electrostatic—in the electrostatic method, either around 1941 or 1942.

Q. Well, I don't believe that quite answers my question, Mr. Roche. You said that is when you first became interested. When did you first learn of the existence of any system that would utilize electrostatics in depositing paint? When did that first come to your knowledge or the knowledge of the officials of the company, in so far as you know?

A. It was around 1941. At that time—well, I don't know what the Ransburg Company was called at that time, whether it was Harper J. Ransburg or not, but they had a demonstration and we were invited to attend and a group of people from the Binks Manufacturing Company went down to see it.

Q. Well, can you relate the circumstances of that and how it came about?

A. That is actually as much as I know about it and my knowledge of it is rather sketchy. That was the first time that at least I, personally, had any knowledge of it and, as I remember, the Ransburg Company at that time invited

a group of Binks' people to go down and see a demonstration of the electrostatic process and a group of people went down from Binks and I also went.

Q. You were one of the parties that went down to Indianapolis?

A. Yes, sir.

Q. Then did I understand you to say that so far as that, the initial idea of employing electrostatics and depositing paint, was derived by the Binks Company from the Ransburg Company?

A. As far as I know.

Q. Do you know, what was the occasion of Ransburg extending the invitation to the Binks Company to come to Indianapolis for the demonstration? Do you know what the occasion was?

A. All I know is that we received the invitation to go and I couldn't tell you why.

Q. Who went down on that trip, so far as you know?

A. You see, of course, at that time I wasn't in an executive capacity of the company.

Q. What was your capacity at that time?

A. I was working in the sales department, an inside job.

Q. In the sales department?

A. Yes.

Q. In the selling of what items?

A. In the standard equipment.

Q. Who else went down, do you know?

A. I know that Mr. Harker who is head of our sheet and metal engineering and Mr. Harrison went, who is head of our automatic spraying machine division. I was trying to recall who went with us. It was so long ago, but I know that those two gentlemen went. That would be Mr. Harker and Mr. Harrison.

Q. Was there anyone there who is in the research department and represented engineering?

A. Mr. Harker is an engineer in our sheet metal division. I can't recall whether the other engineers were there or not. I remember those people because I went down in the car with them.

Q. What happened when you got down there? Did you see a demonstration?

A. Yes, we did.

Q. What was the demonstration you saw?

A. Well, it was a demonstration using—actually where they had a spray gun, conventional type spray gun.

Q. Employing compressed air?

A. Employing compressed air. Then they had an electro-static field, and as the particles were atomized, the paint particles left the gun, they were attracted to the ware. It seemed to have a magnetic attraction for the paint particles and the ware apparently was grounded.

• • • • •

Q. Can you tell us when you or anyone in your company, so far as your own knowledge is concerned, became aware for the first time of an electrostatic coating system or process for airless atomizing of paint as distinguished from the compressed air atomization to which you have referred?

A. For the airless method?

Q. Yes.

A. You mean when I first heard about it?

Q. Yes, when you first learned that there was such a thing on the face of the earth or anyone in your company first learned that, so far as you know.

A. Well, now, it seems to me that we first heard about it around, oh, 1950 or 1951.

Now, I do know this: That I recall seeing ads when the Ransburg Company first started to sell it and I recall

seeing ads in the trade magazines about it. It certainly was well known in the trade.

Now, also, of course I recall the fact that our engineers spoke to me about it. Some of them had heard about it. Some of our branches had heard of it and possibly might have seen an installation, so it became generally known right around that time.

* * * * * *

Q. Well, is it correct to say then that you didn't know anything about an airless atomization coating system using an electrostatic field until you saw one of Ransburg's commercial units in operation?

A. Oh, I knew about it prior to that time, prior to that.

Q. You knew about it prior to the time you had seen any commercial installation of Ransburg, is that right?

A. Yes.

Q. Well, when you first heard about it, you heard about it in conjunction with Ransburg's development rather than someone else's development, isn't that correct?

A. Well, yes.

Q. So, the work done by Ransburg, that first brought to you the knowledge that this type of airless system was a possible system; that is correct, isn't it?

A. That is correct.

Q. Now, do you have any knowledge of any other sources of supply of equipment for electrostatic painting other than that supplied by Ransburg?

A. Yes, I do. There are two companies here located in the Chicago region. One of them is the Ashdee Products Company. I believe I have the name right. I am not sure about the spelling, but, anyway, it is the Ashdee Company.

Another one is the Staticote, Incorporated. I am not sure about the spelling but I think it is S-t-a-t-i-c-o-t-e. It is the Staticote, Incorporated, I believe. They sell the

electrostatic method, but it is the air method of using an electrostatic field.

Q. The equipment sold by those two companies you have named involves the use of a gun employing compressed air; that is correct, isn't it?

A. I know that it certainly did in the beginning. I mean, there are some of our people that are more acquainted with it than I am. So far as I know, it still is.

Q. Do you know of any other companies besides the two you have named and, omitting for the purpose of your answer, Ransburg Company, who sell any equipment for electrostatic coating?

A. Yes. There is one in the east that I know of. I can't think of the name of it. It is located in New Jersey. I think they call it the Ionic method but they have had demonstrations. I go to a number of business shows and I have seen their demonstrations there too.

Q. Did that Ionic type company that you have referred to have equipment employing a compressed air gun also?

A. They have a rather unusual arrangement but I believe they do use the compressed air, although their method is somewhat different from Ashdee and Staticote. Their electrostatic field is set up differently.

Q. Let us take Ashdee. I want to find out about Ashdee and I want to know what you know about them.

When did they come on the market? Do you know that?

A. My recollection is that it was around 1950.

Q. When did you first learn of Ashdee?

A. Shortly thereafter.

Q. After they came on the market?

A. Yes.

Q. And you think that was in 1950?

A. I think it is. I mean, it might have been prior to that.

Q. Did you ever see an Ashdee system operating?

A. I don't actually believe that I did. Some of our other people have.

Q. Do you know how they set up their electrostatic field, for instance?

A. Well, I know that they have the power pack and the electrostatic field, and it is just my impression that they use compressed air.

Q. Is it fair to say that you have no firsthand knowledge of the technical aspects of Ashdee, no firsthand knowledge?

A. I don't have any firsthand knowledge.

Q. Everything you know about it somebody told you?

A. Well, I have talked to the Ashdee people.

Q. Well, somebody told you everything about everything that you know about the technical operations of an Ashdee system, is that right?

A. That is right. Our engineers in the staff at Chicago have told me about it.

Q. Now this other system here in Chicago, which one was that?

A. Staticote.

Q. Have you any firsthand knowledge about the construction and operation of that type of system?

A. No, I don't know about the technical features of it.

Q. When did that first come on the market?

A. I believe that was an offshoot of Ashdee, I would say. My guess would be about two years later, maybe 1953.

Q. When did you first learn there was such a system?

A. You mean the Staticote?

Q. Yes.

A. I knew some of the Staticote people used to work for Ashdee, and they both have been in our plant. I know some of the gentlemen personally at both places.

Q. Who do you know?

A. Well, now, which one?

Q. Who do you know at Ashdee, for instance?

A. Well, now, Ashdee, I knew the former president there. His name was Valiere.

Q. Who else?

A. I know the gentlemen. Now actually whether I can mention their names and pronounce them correctly, I don't know.

Mr. Turngren, I think, that worked for Ashdee, and I think both Mr. Turngren and Mr. Gilbert formerly worked for Ashdee and now they both work for Staticote.

Q. You say you know these gentlemen personally?

A. I have an acquaintance with them. They come in the plant once in a while, and I have seen them at times.

Q. How about the Ionic system that you referred to as produced down East? Do you have any first-hand knowledge of how it is constructed and how it operates?

A. Well, exactly what do you mean? I have seen it operate.

Q. You have seen it operate?

A. They have had demonstrations at shows.

Q. And you have seen it operate. How did it operate? It had a gun using compressed air, you have told us, and how was the electrostatic field established?

A. Well, they have the electrostatic field in back of the gun and they only use, you might say, they used a cut spray gun. They only use half a spray gun. They use the nozzle section. How much, whether electrostatic atomization comes into it, I couldn't answer.

Q. Does it have separate electrodes for establishing the electrostatic field?

A. I don't know.

Q. I don't know whether I asked you whether you had ever seen a Staticote system operating.

A. No, I haven't.

Q. So all you know about a Staticote system you derived from somebody telling you about it?

A. That is right.

Q. And that is true of Ashdee and it is true of Staticote, but it is not true of the so-called Ionic system?

A. Only because I happened to see that at a show, yes.

Q. You happened to see that, but is it true that you can't tell us any of the details of operation and construction more than you have told us here?

A. Well, I think that is true. I am not too well acquainted with the technical phases of it.

Q. Is there anyone else that you know of who supplies equipment for electrostatic coating besides the three companies you have named and exclusive of Ransburg?

A. I can't think of any others at the moment.

• • • • •

Q. What was the first thing that was done in your company toward creating for your own benefit an electrostatic coating system? Just go right back to the beginning and tell us the first thing that occurred leading toward the establishment or creation of an electrostatic coating system as a Binks item.

A. Yes. Well, I will start out by saying that we became interested in electrostatic many years ago.

Q. When did you first become interested?

A. Well, especially, I would say that it was after the war period particularly, and after that aftermath period was over following the war. We didn't have too much time during the war because so much of our production was taken up by the government to give it too much thought, and then following the war there were so many materials that were scarce and all. It was rather difficult to get the materials you wanted for your catalog items.

Q. Was it after Ransburg was on the market with an electrostatic coating system?

A. Well, yes, after they came out with it, you know, the air—

Q. The compressed air type was on the market, and it was after the advent or introduction of that system on the market by Ransburg that Binks first became interested in electrostatic coating systems, is that right?

A. That is right.

Q. How much after Ransburg was on the market did your interest have its beginning?

A. Well, we had, as I said before, we at first thought about coming out with the, you might say, the air method, using compressed air. We knew that patentwise, of course, there were some difficulties there because Ransburg had accumulated so many patents, but after Ashdee and Staticote got into the business, why, they seemed to be able to get around the patent difficulties. There was some question about the angle at which you sprayed which more or less determined whether the patent was in violation or not.

Of course, we had talked to both Ashdee and Staticote, and then we decided that the best thing for us to do—we could see that Ransburg was selling these installations, and actually there wasn't any reason why, in our minds, unless there was some reason to prevent us, why, after all it is a spraying process, why the Binks Manufacturing Company shouldn't get into the business too.

* * * * *

Q. Did you acquire from Ashdee any encouragement or information as to your ability to enter the field as they had done with the avoidance of patents?

A. I think as far as Ashdee was concerned at the time, like a lot of small firms that start into business, they had probably some financial difficulties and their motive at that time was probably to get Binks interested financially in them so that—

Q. They were trying to interest Binks in taking them on or over or something of that sort?

A. Well, there was some discussion regarding that, yes.

Q. When was that?

A. I believe it was in 1951.

Q. Where were those discussions held?

A. They were held at the Binks office in Chicago.

Q. With whom were they held? Who was present?

A. The officials of Ashdee and the officials of Binks.

Who were those officials? Can you name them, please?

A. I was present for one. Mr. Griffin was present, vice-president and treasurer, and I believe Mr. Watts, who is deceased, was present. Mr. Valiére was president of Ashdee at that time, and some of the other Ashdee people I knew, whose names I can't recall. I think John probably could.

We had several, we had some meetings about it. As far as the advisability of our going into the electrostatic venture, that is, but at that time we then decided the best thing to do would be to experiment for ourselves, so we never did do anything about that.

Q. Returning to those meetings, I just want to get a little better idea. How many meetings do you think were held on that subject of Binks becoming interested?

A. Let me put it this way, they were mostly held at the insistence of Ashdee because, as I said, they needed financial assistance, and they would come in as often as we would let them. When we had time for them.

Q. How many times do you think that was? Just give us a fairly accurate idea.

A. I would say I saw Mr. Valiere about five times.

Q. Over how long a period?

A. Over maybe a two year period.

Q. I would like to get from you—

A. (Continuing.) You must remember this too, of

course, that there was a relationship there besides because they bought our spray guns also for their compressed air method.

Q. You were selling your guns to Ashdee directly?

A. Yes, so there were other reasons. There was a customer relationship.

Q. What else did you sell Ashdee?

A. Oh, I presume we sold them hose connections. We probably sold them some pressure tanks.

Q. You sold them all the things that went with the system except for the electrostatic part of it, is that it?

A. Yes, all the spraying equipment that would be required.

Q. What would be your custom on that? Would you sell their customer or sell Ashdee to sell the customer?

A. I think probably—as far as that detail is concerned, I really am not in a position to answer that. I think that probably we did it both ways.

Q. Were you supplying Binks equipment to Ashdee's customers right along or did they have other sources of supply from your competitors?

A. They could always go to our competitors.

Q. Did they as a matter of fact, do you know?

A. I don't know whether they did or not.

Q. It is true, though, that they did a substantial business with you, isn't that correct?

A. I wouldn't say it was substantial.

Q. Substantial for them. I mean it was a large part of their business, wasn't it?

A. I wouldn't know.

Q. Returning to these meetings, I would like to get from you as best you can give it the substance of the conversations that were held between you and these officials from Ashdee. What was the purport of their discussion with you?

I know you can't remember detailed word-for-word statements, but as near as you can give us the burden of the message that was conveyed back and forth over that two-year period. Start with the beginning and tell us what happened so we will get an idea what those meetings were about.

A. Well, the meetings were mainly held—a company like Ashdee probably felt if they had the backing of Binks or if Binks bought them or took them over as a division that they would have financial support, and that they could buy the supplies that they needed in order to operate the business. That was really Mr. Valiere's main purpose in coming.

Now as far as the method, at least from talking to them, they never seemed to have any worry about the patent difficulties. As I say, I know there was some difficulty regarding the angle at which the guns were set, but the—

Q. Did they give you assurance—

By Mr. Meroni: Let him finish. I don't think he was quite through.

By Mr. Hume: I beg your pardon.

By the Witness:

A. (Continuing.) So I don't—I think that was really about the main purpose of the meetings, and they probably came back again and said they probably thought we had changed our mind, but we decided not to go along with the idea.

By Mr. Hume:

Q. Was your decision communicated to them at the outset?

A. No, I would say that the whole thing developed gradually, and they probably always held out hope that we might have a change of heart about it. But at the same time we still continued to supply them with some spraying

equipment, so the relationship always remained pleasant. Then Mr. Valiere left the company, and I can't tell you who the current president is but—

Q. Was there a period there after the initial meeting when you were entertaining consideration of their proposition?

A. I don't understand.

Q. Was there a period following the initial meeting during which Binks was entertaining consideration of their proposition?

A. Oh, I would say we did hold it under advisement, you might say.

Q. For how long a period was that, would you say?

A. Oh, usually, like in any company, there is usually a difference of opinion about those things, sometimes within the management. There were some people at Binks that maybe thought we should have gotten into it and others that didn't, but in the end it was decided that we would not.

Q. You were not interested?

A. That we wouldn't be interested in buying them out or possibly helping them out.

Q. When was that final decision communicated to Ashdee?

A. I couldn't tell you that.

Q. I think you have already indicated about two years after the initial meeting.

A. I know Mr. Valiere was a very persistent man, and he kept on for about two years, but I think we had denfiitely made up our minds prior to that. I would say after a year's time it was pretty much of a dead issue as far as us buying them out or giving them financial assistance.

Q. In relation to your communicating your final decision respecting their proposition, when was this off-shoot company of Ashdee formed?

A. The only thing I know about that is that Mr. Valiere,

the president, was a very difficult man to get along with. He was an impulsive sort of individual, and some of the key people there didn't get along with him, so it was only inevitable that there would be a break-up sooner or later and that finally occurred, and two of the men left. I said I believe the names were Turngren and Gilbert, but I am not sure about that. I only had a casual acquaintance with them, but I know, however, they are in business today under that name. I know our engineers and some of our other staff people can tell you considerably more about it than I can, and our sales people, too.

Q. What was the next thing you did after you entertained the consideration of Ashdee's proposal? Did you have any proposal from any other company?

A. At that time not to my knowledge, we didn't have any.

Q. I think you stated that you decided rather than to hook up in any way with Ashdee, you would go on your own and do your own research?

A. Well, we decided that the most intelligent decision for us to make would be to experiment ourselves and see what we could do with it.

Q. When did you first start experimentation in the electrostatic coating field?

A. I know that we bought a power pack in 1951.

Q. From whom did you buy that?

A. We bought it from Ashdee.

Q. You bought a power pack from Ashdee in 1951?

A. Yes, and we started our experimental program at that time.

Q. At which point of 1951 was that?

A. I don't recall just what month it was.

Q. Who in your company was in charge of that experimentation at that time?

A. Well, our development and research department and

the individuals were, well, Mr. Gustafsson, of course, who was head of the research department, and Mr. Baur, who was chief engineer for our standard equipment. Then we also hired a young electrical engineer by the name of James Rice, and he was assigned to the project right about that time.

Q. He was acquired for the purpose?

A. Yes.

Q. For the purpose of that project?

A. Yes, that is right, because he had that experience we hired him for that project.

• • • • •

Q. What was the first thing as far as you know that was done? What was found out in your experimentation?

A. I know that for a while we had worked with the possibility of coming out with a compressed air method, that is, we gave that some thought, and then after a time we decided to experiment on the airless method.

Q. In other words, is it fair to say that you changed your direction of thought and accomplishment there from the air type over to the airless type?

A. Let me put it this way: I mean we felt definitely that the airless method had possibilities. In other words, our own results of our experiments would more or less indicate in which direction we would go.

Now at that time or shortly after that—of course, as far as we knew at that time there weren't any patent difficulties involved as far as the airless method was concerned. So we decided to get some outside technical assistance.

• • • • •

Q. Now, in connection with your competition in the field which Binks occupies, you stated yesterday that DeVilbiss is your next biggest competitor in your field, in your line, isn't that right?

A. If I may ask you for a clarification of that question,

when you asked the question, I presumed that you were talking about those competitors who manufacture our catalog items only. Is that your question?

Q. Well, if it needs clarification in that direction, I am unaware of it but I understood you to say yesterday that the four biggest producers in your field were Binks, DeVilbiss, Paasche, and that the fourth one was the M and E Company. That is the order in which you named them yesterday; that is correct, isn't it?

A. That is the order in which I named them, yes.

Q. You also said, I think, as of those four, that you, namely, Binks and DeVilbiss were the two biggest and were about equal in the amount of business that each enjoyed?

A. I said that was my opinion.

Q. That was your opinion?

A. Yes.

Q. Is that still true? Do you want to state that is the fact again here today? Is that the fact?

A. Well, I would like to say this, that when I was thinking about the subject of competitors yesterday and when you asked me about them, Mr. Hume, I presumed that you were referring to those competitors who manufacture the same type of standard spray equipment as we do, but we do have a number of other competitors. If I have the liberty of mentioning those—

Q. In what lines?

A. Well, some of them are special. Well, you might say that they sell equipment that does compete with ours, although they don't have the complete line of paint spray equipment.

Q. You are still speaking about the standard line now?

A. Well, yes. Actually, though, it is sort of hard to separate them when you are talking about spray equipment, as I mentioned yesterday. While I did make a designation of the distinction between standard spray

equipment and industrial, we do that for convenience as much as anything else in our own firm, but they overlap so much that it is pretty hard to make a clear cut distinction.

Q. Well, just let me clear that up a bit. DeVilbiss competes with Binks in both the so-called standard line and the industrial line, isn't that correct?

A. The complete line.

Q. And I think you said—what is the fact as to Paasche? Do they compete with you in both industrial and in the standard lines?

A. Yes, they do, to a lesser extent, in both.

Q. And the same is true of the M and E Company?

A. Yes. Originally, they only were competitors in the spray booth line but within the last two or three years, they also are competing in the standard equipment line.

Q. It is still true, isn't it, that DeVilbiss and Binks are the two biggest in this field, isn't that correct?

A. Yes, of those that have a complete line of equipment. That is recognized.

* * * * *

Q. Let me ask you just one more question on this: Isn't it true that DeVilbiss and Binks, which you stated are about equal in the business, are considerably bigger than Paasche?

A. That is right. They are larger than Paasche, although at the present time Paasche is under new management and has expansion plans.

* * * * *

Q. Do you have any recollection of undertaking to employ Mr. Harry Green?

A. I have some recollection of that, yes.

Q. Well, tell us what you know about that.

A. Mr. Green, I will tell you what I do know, which isn't too much, because it was mainly handled by our

sales manager at that time, Mr. E. F. Watts, who we mentioned yesterday is deceased.

But, Mr. Green, as I understand it, had worked for Ransburg and I am not sure at the time he contacted us whether he had severed his employment with them or whether he was still with them, the Ransburg Company, but we did understand that he was looking for a position and through a contact that our sales manager made, a third party, who told us that Mr. Green was interested in finding a position, we finally got in touch with Mr. Green himself and I know that sometime in 1952 he did come to the plant and at one time he was in my office and we talked about employment terms and it did appear that he was going to come to work for us, to work in electrostatic work, but, as I recall, there was some drawback to his coming because it seems to me that at that time Ransburg had hired some of these people by contract and in this contract there was a clause that stated that if they terminated their employment with Ransburg, they wouldn't go to work for a competing firm for two years, and that was one of the reasons—well, we will say it was a possible obstacle in his being employed by us.

We more or less left that decision up to Mr. Green and after rather lengthy consideration, he decided not to come to work for use but he was going to come to work on electrostatics.

Q. Do you know of any steps taken in an effort to employ Mr. William A. Starkey who, incidentally, is one of the inventors in the patent in suit?

A. Mr. Starkey, I know of him and I remember that it was mentioned to me by the sales manager that we had a possibility of obtaining his services, but I wasn't—all of the consulting work was done by the sales manager and I wasn't in on the discussions.

The only thing I know is that we never reached an accord

of agreement with Mr. Starkey either and he never came to work for us.

Q. Who was the man in your company that interviewed Mr. Starkey?

A. I believe it was Mr. Watts.

Q. Who was the man that interviewed Mr. Green?

A. Mr. Watts. And, I also saw Mr. Green.

Q. You saw him?

A. Yes.

Q. Incidentally, Mr. Watts, was he any relation to you, Mr. Roche?

A. Yes. Mr. Watts was my brother-in-law.

Q. When was it that these interviews were had toward the possible employment of Mr. Green?

A. When was it?

Q. Yes.

A. As I recall it was in 1952.

Q. Was that just at the time you were embarking upon a program of starting to devise a system for Binks in the electrostatic coating field?

A. Well, at the same time we were interested in electrostatic, yes.

Q. But he was being sought as a possible member of the research team, so to speak, to develop something for Binks?

A. That is correct.

Q. When were the employment conferences had with Mr. Starkey? Was that at the same time?

A. I don't remember exactly when the contacts with Mr. Starkey were made. They were around that time or shortly afterwards, but I don't know.

Q. Was it for the same purpose, to add another man to your team for research purposes?

A. It seems to me that Mr. Starkey was a consultant, and he worked on either a daily fee or a weekly fee, so it

is possible that we only wanted him for outside advice or occasional advice.

Q. I think you said in 1951 that you did buy a power pack from Ashdee?

A. Yes, we did.

Q. And you did some experimentation of your own?

A. Yes.

Q. That began when in 1951?

A. Well, it began shortly after we bought the power pack in 1951.

Q. Do you know when that was?

A. I can only say that it started in 1951.

Q. I will show you, Mr. Roche, a document that has been marked Ransburg Deposition Exhibit 12 for identification, which purports to be a proposal from the Midwest Research Institute, signed by Mr. Stephens, F. N. Stephens, S-t-e-p-h-e-n-s, and I ask you what that is, if you know?

A. This is the proposal which the Midwest Research Institute submitted to Binks on a study of the application of dynamic and electrostatic techniques to paint spraying systems.

Q. This bears on its face, Mr. Roche, the date of December 2, 1952. Is that about the time it was submitted?

A. Yes, right about that time.

Q. Mr. Roche, can you tell us, with the assistance of your notes there, the duration of your contract with Midwest and the beginning and terminating dates, please?

A. The information contained in this letter was by my request, a report that I requested from Mr. Baur as to the contracts that we had had with Midwest Research Institute and the duration of each.

Do you want me to enumerate each one?

Q. I would like you to give me the information on the duration of your contractual relationship with Midwest and the beginning and terminating dates.

A. The first contract was from March, 1953 through July, 1953. There was a three month extension of the first contract, extending from August, 1953, through October, 1953.

There was also a second contract commencing November, 1953, continuing through April, 1954. There was a 90 day extension of the second contract extending from July, 1954 through October, 1954.

So actually the contracts did run a little farther than I indicated in the testimony. I thought they were cut off a little sooner than that.

Q. Then the final terminating date was what?

A. October, 1954.

Q. Did you visit the research quarters of the Midwest Institute?

A. I made one visit there to Kansas City, yes.

Q. When was that?

A. I don't remember the exact date, but it was sometime in 1953.

Q. Why was the relationship with Midwest terminated?

A. Well, the engineers would be better qualified to answer that than I would be. The only light that I could throw on that would be that we did know, of course, that the Starkey patent was issued in, I believe it was, August, 1954, which to some extent put a damper on our activities of proceeding with it in view of the Starkey patent being issued.

Apart from that, I also think that we felt that the work, at least that our own engineering department was proceeding with the work in a satisfactory manner, and that the services of the outside agency were no longer needed.

Q. Now, Mr. Roche, has your company sold any parts for use in connection with electrostatic painting systems?

A. Any parts that are used in connection therewith?

Q. Yes.

A. Well, yes, we have. If you are talking about under the compressed air method, of course we sold spraying guns and the hose connections.

I think in some cases we sold regulators, under the airless method. I believe we also sold some hose connections.

Q. Well, now, going back to the air type, the compressed air type of electrostatic coating system, I think you said that was a No. 1 type.

In conjunction with whose system have you sold equipment?

A. I believe we sold them in conjunction with all the systems that are on the market today.

Q. And that would include the three you named yesterday, Ashdee, Staticote and the Ionic?

A. Yes, and the name of that is Scientific Electric.

Q. Scientific Electric. That is, the three of them and then Ransburg, is that correct?

A. That is right.

Q. And those four would be all-inclusive; that's all there were?

A. That's all that I personally know of. There may be more.

Q. And you think you sold equipment in conjunction with systems of all of those suppliers?

A. I would say that I know that we have.

Q. When did that business start with Binks?

A. Well, I think it started with the advent of those systems. They needed a spray gun using the compressed air method.

Q. Didn't you sell booths with those systems too?

A. Yes, we often sold booths in connection with them also.

Q. What would be a complete list, if you can give it to us, of all the equipment that was used with those compressed air types of electrostatic systems?

A. The standard spray equipment which consists of the paint spray gun and the hose and the hose connections and while I am not absolutely certain what type of paint container they used with an electrostatic system, it is possible that they also bought some pressure tanks.

The sales department or the engineers could give you accurate information on that.

Q. And what about booths and other things?

A. The spray booths were definitely needed. I know that we did sell a number of booths to some that used the electrostatic systems. I know the customers that bought the electrostatic system required spray booths and we did sell a number of spray booths in conjunction therewith.

Q. Would any other equipment be needed?

A. There probably is other equipment that I haven't mentioned and our engineers can tell you about that.

Q. For instance?

A. I am sure there are parts, other parts that are required.

Q. What about an exhaust system?

A. Well, an exhaust system is an integral part of a spray booth so if you buy a spray booth you have to have an exhaust system with it.

Q. Would you need any water extractors or anything of that kind?

A. I don't know whether they used extractors with electrostatics or not.

Q. Is the need for air systems and booths as great with the compressed air type of electrostatic system as it is with

the old non-electrostatic type of system where you use compressed air without electrostatics?

A. There is still the need for a spray booth with the compressed air system.

Q. I mean, is the need great? Is the loss of paint of the same magnitude?

A. Well, if it is needed, of course it is required, regardless of the amount of overspray.

My opinion would be, at least I have always been told that there is less overspray with the electrostatic method than there is with the conventional spraying method.

Q. Now this business that you were doing in supplying guns and other equipment to the users of the compressed air type of electrostatic coating systems was a substantial business of the Binks Company, wasn't it?

A. No, it was not.

Q. Didn't Binks have a substantial part of the total business that existed in that field?

A. I would say that we got, well, probably half of that available business but the total amount of the volume is relatively small.

Q. As compared to the total business of Binks?

A. Right.

Q. But you got half of what business there was available in that field?

A. I can't give you any accurate figures on that. Of course I have talked to people at times, to people in the sales department about that and I did see a few orders. I do know we sold guns to all those concerns and my estimate is we probably got about half of that business. I am sure De Vilbiss got some, too. I can't give you accurate figures on that.

Q. That trend is continuing up to the present time?

A. Yes, it is.

Q. And about the same magnitude so far as your company is concerned, in relationship to your competition?

A. I would say that it hasn't abated.

Q. Now, has the equipment which we have identified here as the SK-661 emitter ever been sold by Binks to anyone?

A. No, it hasn't been sold by Binks to date.

Q. Has Binks ever offered it for sale?

A. Well, we have submitted a quotation to the Ford Motor Company.

Q. Is that the only quotation you have submitted?

A. That is the only one that I know of.

• • • • •

Q. Did you have any meetings with any other companies or any correspondence with any other companies with respect to your possible supplying of electrostatic equipment other than these transactions we have been talking about with the Ford Motor Company?

A. I would say no, we didn't, and, of course, probably not that we couldn't have had, but, because of the Starkey patent, why, we didn't feel that we could do very much about it.

• • • • •

Q. Did Binks ever develop a system for electrostatic spray coating which employed compressed air that it felt was a commercial system?

A. I would say that while we worked with the compressed air method, that we never had anything, we never developed any specific thing to offer. I think we always thought that it would be relatively easy to produce and to manufacture, if we had so desired and we had given it thought, from time to time, well, since, I would say, since approximately 1950, but we never had anything that we definitely decided on to sell or to market with the compressed air method of electrostatic coating.

Q. What facts, if you know—

A. (Continuing.) We did experiment with it.

Q. What facts, if you know, influenced you to discontinue your development in the direction of a compressed air type of system for electrostatic coating?

A. Well, when you use the word "discontinue," actually, we never had given the thought up.

Q. Well, what factors in the development program, if you know, resulted in the production of an airless type, as distinguished from the compressed air type of electrostatic coating? Is it superior, or what? What prompted that factual change?

A. Well, that was mainly a question for our engineers to decide and I presume that they must have thought it was superior in some respects or we wouldn't have . . .ted working on that development.

They had had some experience with it, had seen installations from time to time in the field and I presume they thought it must have had some advantages over the compressed air process or method.

. . . . .

Q. Is it possible that you have authorized the bringing of this complaint on a mistake of the understanding of the facts?

A. No, it is not possible. The license that was offered us by Mr. Edwin Ransburg was not acceptable to us.

Q. Now why wasn't it acceptable to you anyway?

A. Because we are in the business of manufacturing and selling equipment. When we sell equipment, the title passes, and we are not interested in getting into any sort of an arrangement where we have to tie our customers up with continuous royalty payments or these periodic payments that go on for years.

We don't conduct our business that way. We never have, and it is a very cumbersome process, to such an extent that the Ransburg Company, by operating in this way, has managed to get a monopoly on the electrostatic coating business so far as the airless method is concerned.

They are preventing us from using our method and the way we used to conduct our business. The last letter we received from Mr. Edwin Ransburg was entirely unacceptable to us.

We are not interested in continuous royalty payments.

* * * * *

Q. Now you stated that you are familiar with the terms of this complaint.

Section 9 says that:

> "The Defendant, in granting such licenses under its inventions, including that of the aforesaid Starkey, et al patent, represents to the trade and in interstate commerce that it exclusively owns a patent monopoly for 'electrostatically depositing airlessly atomized (without compressed air) liquid spray particles'."

Now, will you state, please, any facts that you know of which tend to support that allegation?

A. Well, under the present conditions, the Ransburg Electro-Coating Corporation, to my knowledge, is the only corporation in the United States that is selling—not selling, either—I mean, they have their own method of handling it.

Well, actually, you could call it—I don't think you could call it selling, but they do make these installations of the airless method and, as far as the airless method, they have a monopoly on it because of the Starkey patent and they are the only one that is able to use it and consequently it is preventing anybody else from using it unless they would agree to the very strict and rigid terms of the Ransburg

licenses, so, consequently, it is, in my opinion, equivalent to monopoly in that particular field.

Q. Well, do you mean by this that the representations of Ransburg are anything more than the exclusive right which they have pursuant to their ownership of the Starkey patent?

A. Well, I mean their exclusive right, of course, would be based on the Starkey patent.

Q. Well, in other words, what this Section 9 says is that we, that Ransburg, contends, or, it is represented that it has the monopoly or the exclusive right which is inherent in the granting of the Starkey patent and the ownership of that patent by them; that is what that means, isn't it?

A. That doesn't mean that.

Q. It doesn't mean anything else beyond that, because I can understand that, but I wanted to know if it meant anything else.

A. That's all it says.

Q. That's all it means to you and that's all you intended by it, is that right?

A. Well, in this particular clause it says:

"Starkey and others."

It is possibly referring to other patents that they may have.

Q. But it is the right that is found in the possesion and ownership of the patents it holds?

A. Fundamentally I would say it is the Starkey patent, that is right.

* * * * *

Q. Well, essentially you couldn't get a license on your own terms, that is about it, isn't it?

A. Our terms in our opinion are reasonable. We only ask for one payment at the time of the sale. That is usually the way licenses are granted.

Q. Well, that is about the summation of the two letters as you interpret it, isn't it, that Ransburg wouldn't grant a license on the terms that you thought were reasonable?

A. That is correct, reasonable and fair.

Q. As far as you and the other officials of your company are concerned, it is entirely possible that every licensee of Ransburg who has equipment has demanded that they get that equipment from Ransburg, as far as you know?

A. Would you mind repeating that?

Q. You have no way of knowing that everyone who is a licensee of Ransburg, who has equipment from Ransburg, didn't insist that they get that equipment from Ransburg of their own volition?

A. Well, it is possible as long as, I mean, I really can't answer that question. I would say that usually people would like to get equipment from somebody they think has the know-how. So naturally a lot of people, if Ransburg is in that business, they should know what equipment to offer, the best type to offer, and most customers would reach that conclusion, so they might feel they would be better off getting it from Ransburg than they would from somebody else who isn't in that particular field.

Q. It would be a normal thing for users of processes of this kind to prefer to get the equipment—

A. That would be true.

Q. (Continuing)—from the one that had the know-how?

A. Any expert, you might say.

Q. You don't mean that you couldn't supply equipment to licensees as he suggested there, do you?

A. We are not interested in doing that and we feel that that method is entirely unsatisfactory from a customer re-

lations standpoint. Our customers, we know what the reaction would be. I mean, most people want to buy something. They don't want to have to be paying continuous royalty payments, which you might say is the same thing as a rental payment.

* * * * *

Q. Now, to straighten out one point that arose in yesterday's testimony, Mr. Roche, I think you said that after the Starkey patent came out, that that was somewhat of a deterrent to your activities and that this was one factor that entered into the termination of your contract with the Midwest Research Institute.

That is correct, isn't it?

A. That is basically correct. It definitely was a deterrent.

Q. Well, what was the fact? Did you stop research more or less completely when you learned of this Starkey patent?

A. Mr. Baur could give you an accurate answer on that. I think we stopped right or about at the same time that we heard about the Starkey patent.

Q. And was the existence of the Starkey patent the cause of your so stopping?

A. It was certainly a factor.

Q. Well, was it a major factor?

A. I would say it was a major factor, although I stated before that the Midwest Research Institute could do a lot of work for us other than the research on the electrostatic system of spraying.

Q. How long did this state of relative inactivity in your research along the lines of producing an electrostatic coating system continue? How long did that inactivity persist or last?

A. Now are you referring—is this with reference to the Starkey patent?

Q. You have already told me that research activity substantially subsided about the time that the Starkey patent came out and I want to know how long that level of relative inactivity continued.

A. Since the time that we heard about the Starkey patent—there was some lapse of time between the time it was actually issued and we heard about it—the project has been relatively inactive.

I mean, we have had discussions about it, discussions about the possibility of proceeding, and, of course, at the time that the Ford quotations were submitted, more thought was given to it at that time, which I stated previously.

Q. Well, is the state of your development as it is today about the same as it was at the time this drawing was made? I speak of drawing SK 661, Exhibit E of the complaint which is dated May 12th of 1954.

A. To my knowledge, it is about the same, although Mr. Baur can elaborate on that, on what has been done since that time, more than I can.

Q. So that the matter stayed relatively dormant until you got the invitations from Ford to submit quotations, is that it?

A. It was relatively dormant, yes.

Q. And is it the activity initiated by the request from Ford that gave rise to your considerations that resulted in bringing this suit?

A. I wouldn't say that it was. I think that it is true that the quotations that we got from Ford got us all to think about it again. We had always been very much disappointed about the fact that we had spent large sums of money on this research work before the Starkey patent

was ever issued and, consequently, it was a great disappointment to the Binks management that we could not proceed with this project because we had—you might put it this way: The Starkey patent was definitely a deterrent to our producing and selling this item that we had ready to market.

Now, it is true that there was some period of inactivity. At the same time, we all felt if there was the slightest chance of our getting to market that item, why, we certainly wanted to do it in order to justify the expense that we had borne in developing that item.

Q. So, as I understand it, it happened that most of your expenditure in connection with the development had been incurred before you ever knew of the Starkey patent and you learned of it after—

A. The expense—the major part of the expense was incurred before the Starkey patent was issued.

Q. One day you awakened and found the Starkey patent covered a process for which this equipment which you had devised was applicable?

A. That is right.

JOHN W. BAUR, called as a witness on behalf of the defendant, having been first duly sworn, was examined and testified as follows:

Direct Examination by Mr. Hume.

Q. Mr. Baur, will you state your full name, please?

A. John W. Baur.

Q. And your age?

A. 43.

Q. Your residence?

A. 630 Windsor Road, Glenview, Illinois.

Q. What is your occupation, sir?

A. Engineer.

Q. By whom are you employed?

A. Binks Manufacturing Company.

Q. What is your educational background, Mr. Baur?

A. I have a degree of mechanical engineering from the University of Illinois, 1935.

Q. How long have you been employed by the Binks Manufacturing Company?

A. I was employed by them on July 14, 1941.

* * * * *

Q. What is your present title?

A. Chief engineer, standard equipment.

Q. How long have you had that title?

A. Approximately five years.

Q. When you acquired that title, did your responsibilities change from what they had been?

A. Very slightly.

Q. Just give us an idea in your own words what your job was when you went there in 1941 and how it has evolved up until the present time, and what the occasion was of your getting the title of chief engineer for standard equipment.

A. When I originally started at Binks in 1941, they had a single engineering department which covered all development work, engineering work.

* * * * *

Q. What was the department in which you took occupancy at that time?

A. At that time I called it, and still to this day, the experimental department.

Q. Is that the segment of the engineering department

that is charged with the duty and responsibility of research for new products?

A. It is.

Q. Well, now, what was the occasion of your undertaking to work with the Midwest Research Institute? How did that come about?

A. Well, we needed faster and better progress than we were capable of making with our own staff and we wanted a new and fresh approach to the problem regardless of what solution they came up with, so long as it was practical.

Q. Well, let us review a few things that went before the research contract.

Under the program that preceded the employment of Mr. Rice in April of 1952 when you and Mr. Gustafsson and others were working on a compressed air type of research program, what had you accomplished, if anything, by the time Mr. Rice came?

A. In definite product, I would have to say practically nothing, but as far as learning more about the operation, the limitations and quite a bit more of the theory and the reasons, that is about what we accomplished.

Q. And how long a period did you work on that? I think you started early in 1951 and Mr. Rice came in April of 1952. Does that represent about the time, about a year and a half or thereabouts?

A. Approximately that time, I would say, before he came.

As I mentioned before, it was not a full time or a full effort project. The exact time spent on it, I would have to consult the records in order to pick out the exact hours spent, and so on.

Q. In your work in the electrostatic coating field, did

you find that there was a great deal to be learned, for instance?

A. Yes.

Q. And there was a great deal of unknown technical behavior that was present there that had to be studied and determined, isn't that right?

A. It was not too bad on the airless—or the air—excuse me. I am getting my terms mixed.

Q. It was not too bad on the air, the compressed air type?

A. That is correct.

Q. But in the first year and a half of your effort, up to the time that Mr. Rice came, nothing beyond what you might call a general educational insight had been gained, is that correct?

A. I would say that was correct.

Q. You hadn't actually produced any equipment or any system that you had regarded as a successfully complete development, had you?

A. As a matter of fact, as far as a system, if we decided we did want to go into electrostatic systems at that time, of the type that could be offered for sale in the air type, we could have, but they did not meet our requirements of something better than what was existing already on the market.

Q. In other words, are you referring to your ability to go into the field in the manner that, say, Ashdee had entered the field?

A. That would be correct.

Q. And that you considered inferior from the standpoint of your own standards?

A. To what we wanted to accomplish, I would say it was inferior. It has merit.

Q. Why did you think those systems were inferior? I refer to the Ashdee and Scientific and Staticote.

A. Well, I probably shouldn't have said inferior. If we were going to enter the market, we wanted something better or different that we would definitely have a good sales appeal for.

Q. Something that would compete with the Ransburg system, for instance?

A. That or better, if possible.

Q. But you did recognize that you were free or felt you were free to enter the market with a system like the Ashdee, Scientific or Staticote systems?

A. I believe I will have to qualify that. I am not positive of the Staticote system. It is similar—

Q. But like the Ashdee system?

A. That is right.

* * * * *

Q. Well, now, do I understand you to say that you don't feel qualified to make an opinion on the comparison as to the relative worth of an Ashdee electronic painting system as against a Ransburg No. 1 system?

A. Under specific conditions I would venture an opinion.

Q. Well, all right.

A. Under all conditions. I don't believe that an opinion can be mentioned.

Q. Well, now, let us have a comparison, if you are able to make one, between the Ashdee No. 1 system and the Ransburg No. 2 system, which is an airless type of system.

A. That is correct. Again, it would depend upon the item.

Q. Well, do you really think that they are commercially comparable in competition one with the other?

A. In certain applications, yes.

Q. I mean, in general thinking, if you could have one or the other, which one is the one that is commercially desirable to you?

A. It would depend exactly upon what I was trying—or, coating.

Q. Well, it is true, isn't it, that the No. 2 system has outstripped the acceptance of the No. 1 types of systems on the market? Isn't that correct?

A. In certain applications it has. In other applications, it has not.

* * * * *

BENJAMIN J. HEDGER, called as a witness on behalf of the defendant, having been first duly sworn, was examined and testified as follows:

Direct Examination by Mr. Hume.

Q. Mr. Hedger, will you please state your full name and your residence and age, please?

A. Benjamin J. Hedger, 7107 North Nagle, Chicago.

Q. What is your occupation, sir?

A. I am sales manager for Binks Manufacturing Company.

Q. How long have you been sales manager for Binks Manufacturing Company?

A. Approximately two years.

Q. How long have you been employed by the Binks Manufacturing Company?

A. Approximately thirty years.

* * * * *

Q. Isn't it true that in all cases where the No. 1 type of system has been employed, that is, I mean a Ransburg system, that the regular suppliers of the air gun and associated equipment there on the market have supplied that equipment?

A. Well, they have supplied that equipment.

Q. In other words, Ransburg has never gone into the business of manufacturing air guns and the type of equipment that Binks makes?

A. Not to my knowledge.

Q. They have only supplied those things that were not otherwise on the market, isn't that correct?

A. I believe so.

Q. Now, isn't it true also that in the years that followed this demonstration in 1942 that it was the custom and practice of Binks to refer any inquiries that came to Binks with respect to interest in installing electrostatic systems, and they would be referred by Binks to Ransburg?

A. That is right.

Q. That is right?

A. Yes.

By Mr. Hume: Off the record.

(Thereupon a discussion was had off the record.)

By Mr. Hume:

Q. Now, you said a minute ago that at the present time you still make references of inquiries of your electrostatic equipment to Ransburg. Is that a fact?

A. No, I did not say that we were making reference or turning leads over to Ransburg at the present time. I said that we were still furnishing equipment for process No. 1.

Q. Yes. That is in a situation where you deal directly with the user and not through Ransburg?

A. That is right.

Q. Well, when did this practice or whatever policy prompted the practice of making such references to Ransburg cease, and what was the occasion of it?

A. Well, it hadn't actually ceased. We operated with Ransburg the same as we operate with Staticote and Ashdee

Company and Ionic Company in New Jersey, people who were interested in electrostatic equipment in the last three or four years. We recommend all four of them and let them take their choice because we do sell equipment to all four.

Q. Now, all four of these sources of supply that you have mentioned, supply systems or processes which are of the so-called No. 1 type, isn't that right?

A. That is right.

Q. In other words, they use the air type of atomization in connection with an electrostatic field, isn't that right?

A. That is right.

Q. These systems have, by their nature, that type of equipment that constitutes Binks' regular air spray gun line of equipment?

A. That is right.

Q. In all of those cases do—well, let us say, what is your practice in those cases of those four suppliers—I think you have already told us about Ransburg, but, say, the other three, with respect to supplying themselves the air spray equipment of the type that Binks supplies? Do they rely on the Binks and other existing sources or do they undertake to supply it themselves?

A. No. They rely on the Binks and other companies.

Q. So, in so far as the electrostatic systems of the No. 1 type are concerned, to the extent that those systems embrace the kind of equipment that Binks supplies or that Binks still has, it does enjoy that business?

A. That is right.

Q. Did that continue right on through the years after the No. 1 type of system was introduced, up to the present time?

A. Yes.

Q. So, there has been no diminution of your opportunity to participate in the enjoyment of that business, along with

your competitors, in so far as the No. 1 system is concerned?

A. That is right.

Q. That applies, does it not, to Ransburg systems as well?

A. That is right.

* * * * *

Q. Mr. Hedger, I am going to call your attention to Section 9 of the pleading called cross counterclaim, filed by Binks. It reads as follows:

> "The defendant, in granting such licenses under its inventions, including that of the aforesaid Starkey et al patent, represents to the trade and in interstate commerce that it exclusively owns the patent monopoly for electrostatically depositing airlessly atomized (without compressed air) liquid spray particles."

Do you have any knowledge of facts that would tend to support that allegation?

A. Well, if I understand it properly, in calling on the trade, by which I mean the industry, the manufacturers, I know that the Ransburg unit is offered to them for depositing paint on their products. I don't know exactly whether that answers your question or not. For instance, No. 9—it is offered to them in a package deal, the complete setup with license and royalty payments and that I know from a number of different companies that I have personally contacted and also through my own salesmen.

Q. Now, this allegation to which I have directed your attention, alleges what Ransburg or the defendant here represents to the trade and you will notice it says "owns a patent monopoly." Do you understand the meaning of that allegation?

A. I don't believe I do, entirely, with the exception that I understand monopoly and my understanding of that

would be that you actually have to have the permission or the license from Ransburg in order to use this particular process or this particular unit.

Q. Well, does it mean anything to you other than the fact that Ransburg claim they have got the ownership to the Starkey patent?

A. No, I don't believe it does.

Q. It means that and no more than that, so far as you know?

A. That is right.

• • • • •

PLAINTIFF'S EXHIBIT MMMMM.

JAMES H. RICE, called as a witness on behalf of the defendant, having been first duly sworn, was examined and testified as follows:

Direct Examination by Mr. Hume.

Q. Mr. Rice, will you please state your full name, age and residence, please?

A. My name is James H. Rice; age 29. I live at 143 West Devon Avenue, Roselle, Illinois.

Q. What is your occupation, sir?

A. Engineer.

Q. Are you employed?

A. Yes.

Q. By whom?

A. Binks Manufacturing Company, Chicago.

Q. When did that employment start?

A. April, 1952.

• • • • •

Q. Now, what did you do when your employment commenced with Binks? What were your first actions? What did you do. Just relate what happened from then on.

A. I was given a pile of approximately five hundred patents to go through and weed out those that didn't pertain to the electrostatic problem and to familiarize myself with the existing patents at that time.

Q. The patents were there when you arrived?

A. That is correct.

Q. And did you make that patent study?

A. I did.

Q. Well, were you considering these patents from the standpoint of learning from the disclosures or determining the scope of the patent coverage offered by each?

A. My assignment was to familiarize myself with it so that I would know in what direction to go in an attempt not to be copying anybody else or involving us in anything—more or less, to learn the patent system, of which I was not familiar at that time. I had no experience with it.

"Patent" was a word at that time to me.

Q. This was your first encounter with a patent copy, face to face?

A. That is correct.

Q. And your general objective was to avoid unexpired patents, is that it?

A. That is correct.

Q. And to learn whatever you could learn from the entire mass of patents that were at hand?

A. That is correct.

Q. Did you ever arrive at any conclusions as a result of that investigation of patents?

A. No, sir. It was strictly for information.

Q. Did you ever write up any report of your findings?

A. No, sir.

Q. How long were you engaged in this patent investigation?

A. I would say it took approximately two months to

read through them, sort them out, and I never really finished it. I more or less kept those as a reference, from time to time when I wanted to refer to them. Since no report was requested or required, we just made it a part of the project and kept them around.

Q. Did you find any patents in the group that were owned by the Ransburg Company in this suit, the defendant in this suit?

A. Yes, sir.

• • • • •

Q. Incidentally, were you trying, along with your experimental work, any guns using air for atomization?

A. From time to time, we did.

Q. Didn't that field hold out any promise to you?

A. Yes, it did.

Q. And air guns were one of your regular commercial items, were they not?

A. Yes, they were.

Q. Well, what was wrong with the idea of settling, in your own minds, on a development of the type of system employing air atomization? What was wrong with that, if anything?

A. At the time, the air system was fairly well developed, was fairly well established in the field. Problems involved in putting in an air system weren't such that it warranted our investigation. We were supposedly doing research.

Now, the air system, we felt, didn't require too much research. In other words, there was nothing stopping us from entering the field at that time with an air system.

• • • • •

Q. Isn't it true that a type of system which employed air for atomization in conjunction with the electrostatic deposition, effected an economy in paint savings over the air guns that didn't have the electrostatic field?

A. I will say that that depends on the installation, on the object being coated. But, it was my experience that there were some items that could not be coated satisfactorily with any electrostatic system over an automatic system, and vice versa. In other words, it depended a great deal upon the material being used, on the object being sprayed, the coating desired, and this question of savings is a subject that I don't believe anyone at the present time has made a satisfactory analysis of.

Q. Well, you are not willing to admit, then, that the electrostatic painting type of system which still uses an air gun, however, couldn't enter the field in numerous applications where it can be used and can effect substantial savings and economy through savings of paint?

A. It already has, but we were not in the position—we did not feel that we had to come in and do something that had already been done.

Q. Well, yes. Now, is it not true also that comparing the type of procedure wherein you electrostatically atomize in an airless fashion and use an electrostatic field for deposition in conjunction with that that you again effect a substantial savings in paint where that system can be used over the type where air is used in the atomizing which has been referred to as a so-called No. 1 type of system?

A. Well, I will answer that in this way: Considering all three systems that seem to be involved in here, the air atomizing spray gun alone is one system, the air atomizing gun employing an electrostatic field, and a system employing SK-661—there are items that cannot be sprayed by all three of those systems satisfactorily. Any one of those systems might be more efficient for a particular job. In other words, if you pick out one specific item, I will say now that one or two of those systems mentioned would be applicable and maybe one or two of the remaining, depending on what it is, would be absolutely useless.

I have seen installations of the electrostatic type where the touchup that was required meant that the man doing it could have done the whole job with the same amount of paint he was using to do the touchup.

We are getting to the point, in answer to your original question, of why we didn't enter into the air gun electrostatic field alone.

The fact is that of any one of these systems, it could not generally be said, "This is the cure-all." Or "This will do everything." We have had in our plant, on automatic jobs, articles that we could paint that electrostatic systems have been set up for and from our figures that we could see, we couldn't see where the savings were. There were other jobs where there were savings. So, when you ask, wasn't one system superior to another, you would almost have to take a specific installation.

Q. Well, now, let me ask you this: You have addressed yourself rather completely to what may be regarded as the uniqueness of each of these systems and what the situation is where we do not substitute one for the other. There is a large area, though, and a large number of kinds of products, where they can be substituted one for the other and are substituted one for the other, isn't that correct?

A. Correct.

• • • • •

Q. Yes, but you feel that there are applications for the electrostatic type of deposition where an actual better coating is arrived at which is possible with the air gun type where you have no electrostatics?

A. Not better, no, sir; more efficiently.

Q. So, the benefit is not, then, in a better coating?

A. No, sir.

Q. In other words, the old system of using air guns without electrostatic fields could give you as good a coat-

ing as you ever hoped to achieve with electrostatic, is that it?

A. In many instances, yes, sir.

Q. Well, is there any instance where that isn't true? Certainly an air gun is hand held and is more flexible than any other type, isn't it?

A. That is right.

Q. So far as the contour of the part is concerned, the hand-held gun is operating on the side of improved results so far as the coating is concerned, is that not true?

A. That is where over-spray or feed-back, in other words, bouncing off on an item comes in. I would have to again state, as before, an item that is particularly shaped so that the electrostatic field lends itself to it—in other words, the hand gun—not the hand gun but the automatic gun, would not be able to produce the same coating in the same spot without additional touchup or reinforcement. The same is true in the opposite sense: In other words there are many cases where you cannot deposit electrostatically and you must use an automatic or hand gun to put paint in those particular places.

Q. And that is done today? That touchup system is used extensively?

A. Yes.

Q. That is a combination of the two different systems?

A. But here, we have found in many cases the touchup —the man might as well be doing the whole thing.

Q. Just a couple of more questions. In those cases where you feel that the electrostatic type of system has a real place in the scheme of things, pertaining to painting, wherein does the advantage lie if it is not in improved coating?

A. The advantage lies in savings of the amount of material used per unit of production.

• • • • •

Q. Now, at the time that these drawings came in from Ford, you have already stated, I believe, that you had been in a state of inaction for approximately a year, being held up, pending some investigation of the Starkey patent here in suit?

A. It was my understanding that I was to hold up; that there were some discussions and meetings that went on in management. All I was given was the decision that I was to hold it up.

Q. What happened during that year, in your department, as far as the disk, the slotted disk emitter is concerned?

A. It was packed up carefully and stored in the department.

Q. Did all research terminate?

A. Actual testing and physical research, I would say yes, but I am still interested in the details.

I, of course, went on on my own, maintaining my contact with the field, but I was assigned to other projects and other work that came up, from time to time, that did not pertain to electrostatics.

Q. So, I think it is fair to say that by and large and for the most part, the project on the electrostatic emitter came to a halt at that time and a period of about a year of inaction followed?

A. That is a fair—

Q. That is a fair statement?

A. —a fair statement.

PLAINTIFF'S EXHIBIT NNNN.

MILTON F. PLEVA, called as a witness in behalf of the plaintiff herein, having been first duly sworn, was examined and testified as follows:

Direct Examination by Mr. Meroni.

Q. Please state your name.

A. My name is Milton F. Pleva.

Q. Where do you reside, Mr. Pleva?

A. In Western Springs.

Q. Illinois?

A. That is correct.

Q. How old are you, sir?

A. I'll be thirty-seven in June.

Q. What is your educational background, briefly?

A. Well, I have a Bachelor's degree in civil engineering from IIT and, of course, all of the preliminary education prior to going to college.

Q. You are a graduate engineer?

A. That is correct.

Q. By whom are you presently employed?

A. By Ransburg Electro-Coating of Indianapolis.

Q. How long have you been employed by that company?

A. Since September of 1951.

Q. Has the employment been continuous since that time?

A. Yes, sir.

Q. In what capacity are you employed there?

A. As a sales engineer.

Q. Has that been your capacity of employment since the commencement of the job?

A. Yes, sir.

Q. Do you have assigned to you any particular area?

A. Yes.

Q. Will you state for the record briefly what sales area you represent for the company?

A. The State of Minnesota, the State of Wisconsin, roughly the northern half of the State of Illinois and Lake County of Indiana, and within the Upper Peninsula of Michigan, which, of course, is adjacent to Wisconsin.

* * * * *

Q. In order to save time I am going to hand you as a group a number of bulletins and pricing guides that have been identified in this case as Exhibits JJJ-1, OO, NN, YY, JJJ-2, and III-1, and I will ask you if you have seen any of these bulletins before and, if so, to state how they came to your attention.

A. I have seen all of these except the first one. The first one is dated August 18, 1950.

By Mr. Hume: Exhibit JJJ-1?

A. Exhibit JJJ-1, I have never seen that one. I have seen all the rest of them and they have all come to me through the mail, to the best of my recollection.

Possibly one of them somewhere might have been handed me when I was in Indianapolis, but I don't remember that. I would say they all came through the mail.

By Mr. Meroni: Q. Did you undertake to follow the instructions in the guides that went to you in those bulletins?

A. Sure.

Q. You understood, as a matter of company policy, that you were to follow the instructions and guides that were embraced in these bulletins, did you not?

A. Sure.

Q. Now, when you first came with the company were you authorized to sell agreements on electrostatic systems where the company would not supply the equipment?

A. Yes.

Q. You say you were?

A. I was told that we would license a user without providing our equipment.

Q. Well, is it not a fact that you received that information in the form of these bulletins?

A. Oh, I am sure I was told that at the time that we were going over the entire operations.

• • • • •

Q. Mr. Pleva, in answer to one of Mr. Meroni's questions in regard to the 1953 letter—

By Mr. Meroni: I think that is the one you want (indicating).

By Mr. Hume: Q. (Continuing.) —which was handed to you and identified as Exhibit LLL-2, he asked you whether or not you had ever discussed with any representative of the Ransburg Company the reasons for sending out that letter.

Now, what was your understanding of his question with respect to the term "company representative"?

A. Well, I assume he meant representatives like I, other than sales representatives in the company, in the various territories.

Q. Well now, on the assumption that he might have intended to embrace anyone representing the company, would your answer still be correct in including the officials of the company?

A. No, because, as I indicated earlier, I did discuss this thing with Ed Ransburg prior to its going out. In fact, I indicated at that time that I was unhappy with the thing, and so stated.

Q. Well, did you ever discuss with Mr. Ransburg or anyone else in the company the reasons why the letter was sent out?

A. Sure. At the time that I squawked about it, I mean, I wanted to know what the purpose was, why we were doing this.

Q. What did he tell you was the reason, if he did tell you?

A. Well, he advised that they wanted this letter to go out so as to be sure that all of our customers realized that if they wanted to use a Ransburg license, a process license, and provide their own equipment, they were so able to do, pointing out that this had always been a company policy, but that that letter would insure that if any of our people in the field had been derelict in advising customers of this, this would officially do it in writing.

* * * * *

ELMER HOULBERG, called as a witness in behalf of the plaintiff herein, having been first duly sworn, was examined and testified as follows:

Direct Examination by Mr. Krause.

Q. Would you state your name, please?

A. Elmer Houlberg.

Q. Where do you live, Mr. Houlberg?

A. I live in Dundee, or just west of Dundee. It's Sleepy Hollow Manor.

Q. Is that the post office address?

A. The post office address is Dundee, Illinois.

Q. What is your age, sir?

A. My age is forty-two.

Q. By whom are you employed presently?

A. Chicago Rawhide Manufacturing Company.

Q. What is your position with that company?

A. Assistant general manager.

Q. Can you give us a brief outline of the scope of your duties and responsibilities in your present position?

A. Well, the responsibilities with the company generally have to do with the controlling of production and

purchasing within the Elgin plant. This is the Elgin Division in Elgin, Illinois.

Q. How long have you been employed by Chicago Rawhide Company?

Twenty-two years.

• • • • •

Q. Prior to your trip to Indianapolis, sir, I believe you said you contacted Mr. Pleva.

A. Right.

Q. Did he give you any indication of what the financial arrangements would be for a Ransburg system, the basis upon which they licensed it?

A. No, that wasn't discussed too much in the beginning. We were primarily interested in finding some equipment at the time that would fit our needs and Ransburg was one among three or four of the sources that we contacted at that time.

• • • • •

Q. Where did you first learn of the Ransburg Electro-Coating Company? How did that come to your attention?

A. It came about through one of our men in the office, Mr. Charley Finney, began with his contact with Ransburg. I believe we were furnishing some packings to Ransburg and in the course of conversation or contact with Ransburg he learned of this electro-coating equipment which was available and it was through his contact that we obtained information as to such equipment.

Q. Did you have any knowledge at the time you first contacted them as to the method that they did business under—that is, on a rental basis?

A. No.

Q. And at that time, I think you said, you were also giving consideration to other sources of supply of—

A. That's right.

Q. (Continuing.) —spraying equipment.

A. Yes.

Q. What other sources were you pursuing at that time?

A. Binks Manufacturing, Spra-Con Company, Ashdee, DeVilbiss. That's it.

Q. Now, what kind of equipment was under consideration in your dealings with the Binks Company?

A. Spray equipment.

Q. You mean the air spray type of equipment?

A. A rotating unit assembly, a self-contained unit with spray gun equipment.

Q. And when you say "spray gun," do I understand you to mean a gun that used the compressed air in spraying?

A. That's right; right.

Q. And did that equipment embrace any electrostatic proceedures at all?

A. No.

Q. What kind of equipment was under consideration in your association or dealings with the Spra-Con Company?

A. There we merely contacted them and they pointed out to us that they really had nothing that they could offer us in connection with our application.

Q. What was the type of equipment under consideration in your dealings with Ashdee at that time?

A. Ashdee was an electrostatic painting equipment.

Q. And what was under consideration with DeVilbiss at that time?

A. DeVilbiss was spray equipment.

Q. Of a type not employing electrostatic—

A. No, sir; electrostatic type—

Q. (Continuing) —fields?

A. Continuing) —compressed air equipment.

Q. Did you run any tests or obtain any data with respect to any of these other sources to determine the possible value of this other equipment in the hands of your company?

A. Yes, I did.

Q. You did?

A. Yes.

By Mr. Krause: Mr. Hume, I think that the last question was improper cross-examination, departing from the scope of our direct examination.

By Mr. Ice: Well, he was asked what other equipment he looked at and he named four sources on direct.

By Mr. Krause: But he didn't evaluate the relative merits.

By Mr. Hume: Well, we are just trying to get the full benefit of his testimony here on these other competitive considerations.

Q. Now, when in relationship to your contact with Ransburg did you deal with these other companies, Binks and Spra-Con and Ashdee and DeVilbiss? Was it before or after or at the same time?

A. Before.

Q. Now, have you got in your file there a folder entitled Ransburg No. 2 Process?

A. Yes, I do.

By Mr. Hume: I will ask the reporter to mark the folder which was produced from the witness' files, bearing the title Ransburg No. 2 Process, as Defendant's Houlberg Exhibit No. 1 for identification.

(Exhibit so marked.)

Q. I will ask you to look at the exhibit that has just been marked as Defendant's Houlberg Exhibit 1 for identification and ask you when that first came to you or the company.

A. It came to us in June of '55.

Q. And where did you get it, if you know?

A. I believe that, as I recall, it was left with us by Milt Pleva at the time he was first contacted.

Q. Did that come into your personal possession at that time?

A. Yes, it did.

Q. Did you look it over and read it at that time?

A. I looked it over; I won't say that I read it.

Q. And was this bulletin or folder which has been marked as Defendant's Houlberg Exhibit 1 for identification a source of information to you as to what the Ransburg equipment would do?

A. Would you repeat that again?

Q. Was this bulletin that I have marked as Defendant's Houlberg Exhibit No. 1 for identification a source of information to you as to the nature of the Ransburg equipment?

A. That's right.

By Mr. Krause: Mr. Hume, I object to the question. The bulletin speaks for itself.

By Mr. Hume: I am just asking him if it served as a source for his information, did he rely on it and gain information from it.

By Mr. Krause: Objection.

By the Witness: Pardon?

By Mr. Krause: Same objection.

By Mr. Hume: Go ahead. You may answer.

A. We used that for the source of the information the same as we did on the information we got from DeVilbiss, Binks, Ashdee, Spra-Con.

* * * * * *

PAUL ROTHE, called as a witness in behalf of the plaintiff herein, having been first duly sworn, was examined and testified as follows:

Direct Examination by Mr. Krause.

Q. Would you state your name, please?
A. Paul Rothe.
Q. Where do you live, Mr. Rothe?
A. Lombard.
Q. Illinois?
A. Lombard, Illinois.
Q. What is your age, sir?
A. Forty.
Q. What is your educational background, Mr. Rothe?
A. I have a year of college.
Q. In what field?
A. Engineering.
Q. Are you appearing here under a subpoena?
A. Yes.
Q. By whom are you employed presently, Mr. Rothe?
A. National Cylinder Gas Company.

* * * * * *

By Mr. Hume: Q. Now, Mr. Rothe, I notice that you have in your possession there a bulletin or folder of the Ransburg Company.

A. Yes, I do.
Q. Do you find that in your file?
A. Here (indicating).

By Mr. Hume: This was the bulletin entitled Ransburg No. 2 Process, the Electrostatic Paint Spray, which was copyrighted in 1953. This is made up in white, black, and yellow coloring and is the same as the one identified earlier in Mr. Houlberg's deposition.

By Mr. Meroni: I haven't made a comparison, but I will take your word for it.

By Mr. Hume: It was identified therein as Defendant's Houlberg Exhibit No. 1 for identification.

By Mr. Meroni: All right.

By Mr. Hume: Q. When did you receive that, as far as you can recall?

A. I can't recall. I believe Milt Pleva must have left it with me on one of his visits.

Q. Do you think he handed it to you on that occasion?

A. I believe he did.

Q. On the occasion of one of his visits to your office?

A. Yes.

Q. Can you recall whether it was before or after the trip to Indianapolis?

A. I believe it was before.

Q. Would it be characterized as in the early stages of your dealings—

A. Yes.

Q. (Continuing)—with him?

A. Yes.

Q. Did you familiarize yourself with the contents of that folder?

A. Yes, I looked through it.

Q. And did the information contained therein serve as a guide to you as to the character of the Ransburg equipment and the method of their handling leasing arrangements with their customers?

A. It gave us an idea of what their equipment consisted of.

Q. And did it give you any idea as to the method of doing business?

A. No, I don't recall that at all.

Q. I will call your attention particularly to the items listed in the columns on the last inside page of the folder

and the opposite sheet and ask if that refreshes your memory and whether or not you made any perusal or study of those disclosures at the time you first got this bulletin or shortly thereafter.

A. I am quite sure I must have read the pamphlet at the time I received it, but, naturally, three years have gone by and I can't recall too much about it.

Q. Well, is it fair to say that you were in possession of the information that is set forth in that bulletin at that time?

A. Well, I had the information in the file, yes. I can't quite understand the question.

Q. Well, were you aware of the information that is contained in there? Had you read it and become knowledgeable as to the provisions that are set forth on these two sheets?

A. I would say yes, I had.

Q. At that time?

A. Yes, that is correct.

Q. And that was before you went to Indianapolis?

A. Yes.

* * * * * *

Q. Mr. Rothe, at the time you had these negotiations you testified about, did you understand that there was any alternative arrangement available, other than the one tendered to you by Ransburg?

A. No.

By Mr. Krause: That's all.

By the Witness: Excuse me. You mean could I secure this electrostatic painting from some other source?

Q. No. I meant was there an agreement or some procedure available from Ransburg other than the one which was tendered to you in the form of that contract.

A. No; that is the only agreement.

Q. Is that the only one you understood to be available?

A. No. I looked into others at the time, too.

Q. I mean from Ransburg.

A. Oh, from Ransburg.

Q. Yes.

A. I didn't know of any other. I was led to believe that this equipment had to be leased and, of course, I wasn't interested in obtaining it in any other manner than in a package unit.

* * * * *

279

DEFENDANT'S EXHIBIT 8-A.

Aug. 3, 1954 W. A. STARKEY ET AL. 2,685,536

METHOD FOR ELECTROSTATICALLY COATING ARTICLES

Filed Sept. 29, 1944 2 Sheets-Sheet 1

FIG. 1

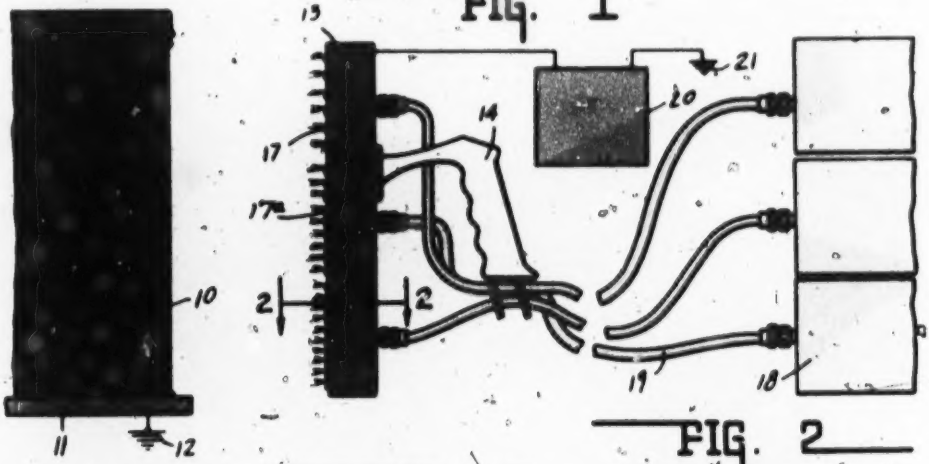

FIG. 2

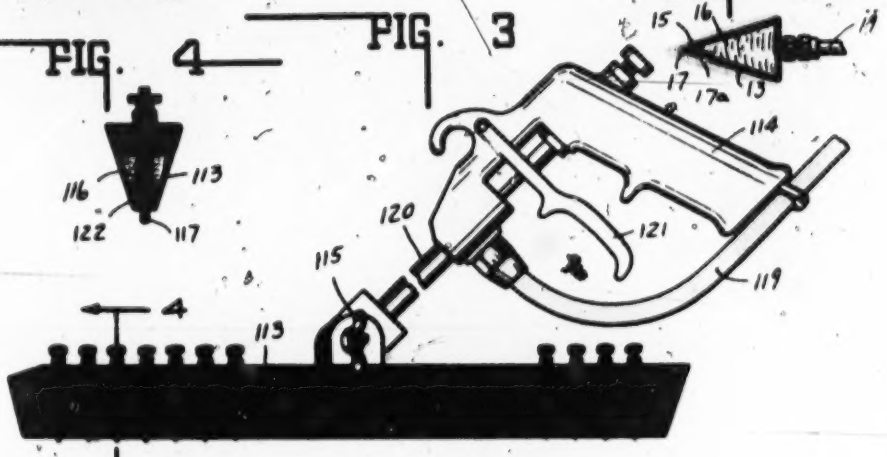

FIG. 3

FIG. 4

FIG. 5

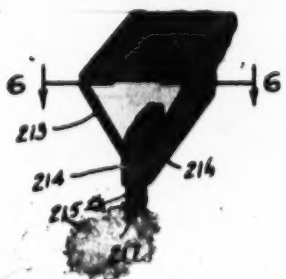

FIG. 6

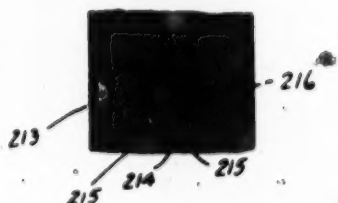

INVENTORS.
EDWIN M. RANSBURG
WILLIAM A. STARKEY.

BY Lockwood, Goldsmith & Galt.

DEFENDANT'S EXHIBIT 8-B.

Aug. 3, 1954 W. A. STARKEY ET AL 2,685,536

METHOD FOR ELECTROSTATICALLY COATING ARTICLES

Filed Sept. 29, 1944 2 Sheets-Sheet 2

FIG. 7

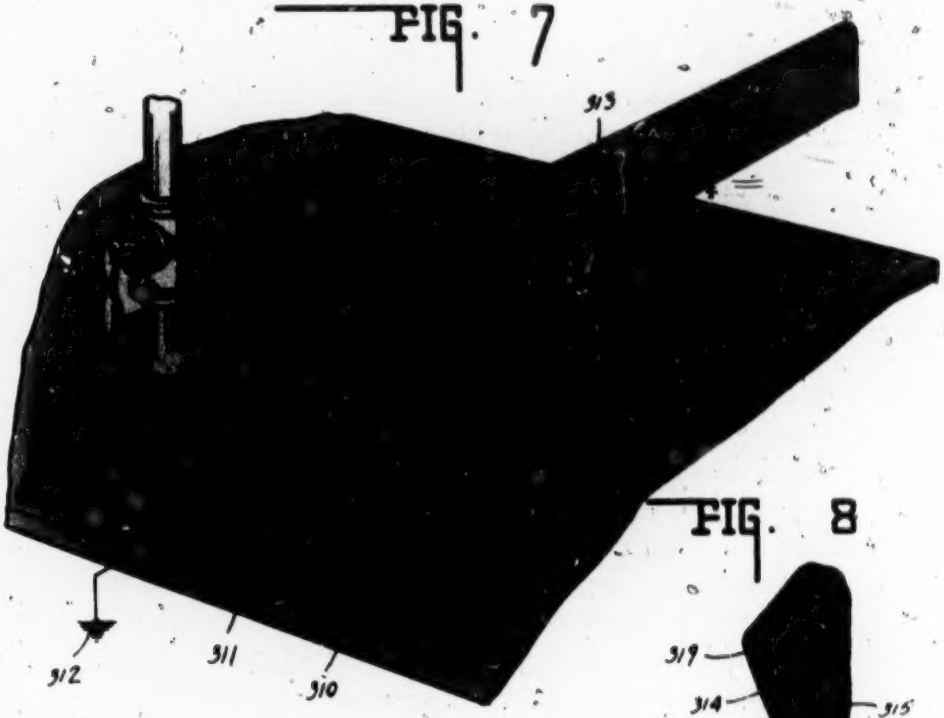

FIG. 8

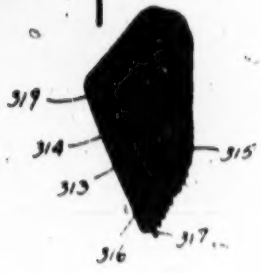

FIG. 9

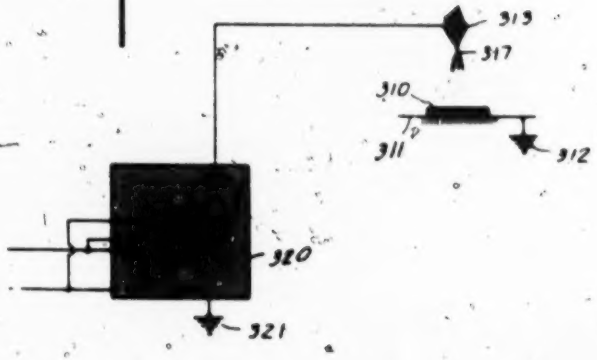

INVENTORS.
EDWIN M RANSBURG
WILLIAM A STARKEY
BY Lockwood, Goldsmith & Galt
ATTORNEYS

DEFENDANT'S EXHIBIT NO. 19.

Case 166—Proposed New Claim.

18. Apparatus for electrostatically spray-coating an article, comprising an atomizing head, means for feeding liquid coating material to said head, means including said feeding means for distributing coating material to an extended atomizing zone where it is to be atomized from a plurality of spaced points (from which atomization takes place), said points being sufficiently close together to permit the coating material to bridge the spaces therebetween, a support for supporting an article to be coated in spaced relation to said atomizing zone, and means including a high-voltage source for creating over the surface of the article on said support an electrostatic field capable of atomizing the coating material into finely divided, electrically charged particles and electrostatically depositing particles atomized from said atomizing zone on the article while still in liquid state, said atomizing head and support being so relatively disposed as to provide between the article and the atomizing zone a spacing great enough to permit substantial dispersion of the atomized particles by the electrostatic forces of the field.

DEFENDANT'S EXHIBIT NO. 23.

Harper J. Ransburg Co.,
Indianapolis.

August 29, 1947.

Bulletin No. 55.

To: All ECD Distributors.

Gentlemen:

The purpose of this bulletin is to outline our policy toward prospective users of the Ransburg Electrostatic Spraying and Detearing Processes.

You are familiar with the major items which we give a customer under our "Agreements" such as:

1. Specialized equipment.
2. Engineering recommendations prior to installation.
3. Supervision of the installation.
4. Replacements of defective parts.
5. Patent infringement indemnification to the extent of the fees paid.

We know of no customers who have desired to furnish their own specialized equipment. However, if a prospective customer should insist upon furnishing his own specialized equipment, our policy is to permit him to do so. In such case our fee to the customer would be proportionately less. However, in such situation, quite naturally, we would be forced to give more limited advice, recommendations and service. Our engineering recommendations prior to installation would have to be more limited. We could not give as extensive supervision of the installation. We could not replace defective parts. We could not give patent in-

fringement indemnification. We could not be responsible for the operation of the installation.

We do not sell specialized equipment to the general public even though it is our policy to license prospective customers who prefer not to use our specialized equipment.

Yours very truly,

E. M. Ransburg.

EMR:bh

DEFENDANT'S EXHIBIT NO. 24.

Ransburg Electro-Coating Corp.,
Indianapolis.

Bulletin.

August 18, 1950.

To All Distributors.

Gentlemen:

We have noticed that voltage supplies have been advertised which are supposedly suitable for electrostatic painting. The purpose of this bulletin is to again call your attention to our policy toward prospective users of our processes who might wish to use equipment other than ours.

The fact that normally we supply our customers with equipment of our own design greatly facilitates and simplifies our giving engineering recommendations, supervision of installation, replacement of defective parts, spark guard equipment and patent-infringement indemnification. For that reason, we believe it best, both from our own and our customers' standpoint, that our specialized equipment be used.

We know of no customers who have desired to furnish their own equipment for use with our processes. However, if a prospective customer should wish to use equipment other than ours, it would not be contrary to our policy. In such a case, however, pricing, etc., would be different from normal, and each case would have to be given special consideration. Therefore, if such a situation should arise in your territory, we recommend that you refer the situation to this office.

Yours very truly,

Ransburg Electro-Coating Corp.

I acknowledge reading this bulletin on this ..... day of ..... 1950.

DEFENDANT'S EXHIBIT NO. 26.

Ransburg Electro-Coating Corp.,
Indianapolis, Indiana.

May 27, 1953.

To All Distributors:

Attached is a new pricing sheet showing a change in initial fees for Detearing and No. 1 Spray Process and a more concise listing of No. 2 Process initial and monthly fees. As you know, it has always been our policy to be willing to grant any customer a license under our patents with or without our equipment (our Bulletin of August 18, 1950). The enclosed price sheet shows the differences in initial fees so that all interested customers can be advised promptly by you of the proper prices and terms of agreements either with equipment and appurtenant items, or a license without equipment and appurtenant items. At-

tached are four sample agreements, identified as A, B, C, and D.

A is our standard detearing agreement under which the customer obtains from us all the services and facilities we are willing to supply.

B is our standard detearing agreement under which we license our detearing process without furnishing equipment and appurtenant items thereto.

C is our standard No. 1 spray agreement under which the customer obtains from us all the services and facilities we are willing to supply.

D is our standard No. 1 spray agreement under which we license our No. 1 Spray Process without furnishing equipment and appurtenant items thereto.

You will notice that the principal changes in agreements identified as B and D are:

1. All of the paragraphs relating to Ransburg's providing equipment, supervision, and patent infringement indemnification have been eliminated.
2. The Inspection paragraph in the new agreement gives Ransburg the right to inspect User's plant to determine the manner in and extent to which User is using the Detearing Process, whereas in the old agreement the Title paragraph provides that Ransburg shall have the right to enter User's plant to determine the manner in which its equipment and process are being used.
3. The Fee paragraph has been changed by modifying the initial fee and the basic minimum monthly fee to take into account the fact that Ransburg is not furnishing any equipment and appurtenant items.

We are sending these to each of you with the request that each prospective customer be advised that either agreement form is available and the attached price sheet

will give you the price differentials for the respective agreements.

In the event any of our present detearing or No. 1 spray licensees are unfamiliar with the fact that they can as readily obtain a license from us without equipment and appurtenant items, they will now be advised by an appropriate letter from us, as per the enclosed letters E, F, G and H.

Yours very truly,

E. M. Ransburg.

EMR:eh

Letter E.

Gentlemen:

We wish to inquire whether you would like to convert the subject electrostatic spray licenses to licenses under which we would furnish you no equipment and under which we would assume no obligation for replacement parts, supervision or service, or patent infringement indemnification. If you should elect to assume responsibility for these items for yourself and return our equipment, your basic minimum monthly fee of $100.00 for each unit would be reduced to $80.00 for each unit, and your initial fee under No. ..... would be reduced from $2600 to $800.

If you are interested in such a proposal, upon advice from you we will send our alternate license agreement.

Letter F.

Gentlemen:

We wish to inquire whether you would like to convert your present electrostatic spray license to one under which we would furnish you no equipment and under which we would assume no obligation for replacement parts, supervision or service, or patent infringement indemnification.

If you should elect to assume responsibility for those items for yourself and return our equipment, your monthly fee of $182.91 would be reduced to $162.91 for the first shift's operation.

If you are interested in such a proposal, upon advice from you we will send our alternate license agreement.

Letter G.

Gentlemen:

We wish to inquire whether you would like to convert your present detearing license to one under which we would furnish you no equipment and under which we would assume no obligation for replacement parts, supervision or service, or patent infringement indemnification. If you should elect to assume responsibility for these items for yourself and return our equipment, your basic minimum monthly fee of $50.00 would be reduced to $37.50.

If you are interested in such a proposal, upon advice from you we will send our alternate license agreement.

Letter H.

Gentlemen:

We wish to inquire whether you would like to convert your present detearing license to one under which we would furnish you no equipment and under which we would assume no obligation for replacement parts, supervision or service, or patent infringement indemnification. If you should elect to assume responsibility for those items for yourself and return our equipment, your monthly fee of $142.37 would be reduced to $129.87.

If you are interested in such a proposal, upon advice from you we will send our alternate license agreement.

Serial No. .....

Ransburg Electrostatic Detearing Agreement.

This agreement, entered into by and between Ransburg Electro-Coating Corp., an Indiana corporation, having its principal place of business at Indianapolis, Indiana, hereinafter called "Ransburg," and .....

.....

.....

hereinafter called "User," Witnesseth:

Whereas, Ransburg owns certain United States letters patent and inventions all pertaining to and covering methods and apparatus used in the electrostatic detearing of articles, the process so used being referred to as "said Process," has acquired much engineering data and experience pertaining to said Process, is conducting research in that field, has performed a substantial amount of engineering in adapting said Process to commercial use, has supplied User with the results of said engineering pertinent to User's production, and has designed special equipment therefor; and

Whereas, User desires to use said Process and benefit from Ransburg's engineering and requests that Ransburg furnish certain special equipment hereinbelow described;

Now, therefore, it is mutually agreed as follows:

1. License: In consideration of the payment by User of the fees herein provided, Ransburg hereby grants to User, subject to and in accordance with all of the terms and conditions of this agreement and while the same is in effect, a nonexclusive nonassignable license to use said Process at User's plant in ....., with one unit as shown in Ransburg's Drawing No. ....., subject to such changes therein and such further specifications

as Ransburg may prescribe, for electrostatically detearing

.....,

but said license shall not include the right to use said Process in the coating of piezo-electric devices and magnetic recording and/or reproducing apparatus.

2. Equipment: Ransburg will furnish User, for its use of said Process, one voltage pack and electrical controls, electrodes and insulating supports therefor, and high voltage lead-in means, which will be shipped prepaid to User's aforesaid plant upon request of User. As parts of Ransburg's equipment become defective, User agrees to return prepaid all such defective parts to Ransburg promptly. Ransburg will furnish replacements without charge, of any such defective parts which become defective as a result of ordinary wear and tear from proper use and operation, provided such parts are returned to Ransburg within thirty days after they become defective. If said defective parts become defective from improper use, operation, or negligence of User or if said defective parts are not returned to Ransburg within said thirty-day period, User agrees to pay Ransburg Ransburg's standard charges for furnishing replacements for said defective parts. The furnishing of equipment and replacements by Ransburg is subject to the availability to Ransburg of the necessary component parts of the equipment and replacements and to prior shipment commitments of Ransburg. User shall furnish all labor, material, and equipment necessary for the use of said Process except the equipment to be furnished by Ransburg in accordance with this paragraph.

3. Supervision: Ransburg will furnish supervision necessary for placing its equipment in readiness for operation. Should Ransburg's supervisor make more than one trip to the plant of User or be delayed there for any cause not chargeable to Ransburg, then for each day of such trip or trips or of such delay, User shall pay Ransburg the sum

of Seventy-five Dollars and any necessary transportation expenses incurred thereby.

4. Conversion: Ransburg will grant, upon written request by User, a license to use said Process otherwise than as described in Paragraph 1 unless, in Ransburg's opinion, the requested use involves unsafe practices or impractical conditions or is in conflict with the policies or commitments of Ransburg. Such conversion shall be made only after Ransburg has agreed thereto in writing.

5. Patent Infringement Indemnification: Ransburg agrees to indemnify User (but not in an amount in excess of the total fees paid pursuant to Paragraph 11 hereof) against any liability for infringement of letters patent by said Process if used in accordance with the terms and provisions hereof and to undertake at its expense the defense of any suit brought against User for such infringement, provided User shall promptly notify Ransburg of any such claim of infringement, permit Ransburg to assume the defense thereof, and cooperate with Ransburg in respect thereto and in respect to any necessary changes of equpiment or use thereof.

6. Liability: User agrees that Ransburg shall not be liable to User for any loss, cost, expense, or damage arising from any failure of said Process or equipment to function in any particular manner or to electrostatically detear any particular article or assembly, or for any claim (other than as provided in Paragraph 5) resulting from the use, operation, or condition of the equipment furnished by Ransburg while said equipment is in the possession or custody of User. User further agrees to reimburse Ransburg for any loss, cost, expense, or damage which may be sustained as a result of any liability to third parties for any claim (other than as provided in Paragraph 5) resulting from the use, operation, or condition of the equipment furnished by Ransburg while said equipment is in the possession or custody of User.

Ransburg Electrostatic Detearing Agreement.

This agreement, entered into by and between Ransburg Electro-Coating Corp., an Indiana corporation, having its principal place of business at Indianapolis, Indiana, hereinafter called "Ransburg," and .....

.....

.....

hereinafter called "User," Witnesseth:

Whereas, Ransburg owns certain United States letters patent and inventions all pertaining to and covering methods and apparatus used in the electrostatic detearing of articles, the process so used being referred to as "said Process," has acquired much engineering data and experience pertaining to said Process, is conducting research in that field, has performed a substantial amount of engineering in adapting said Process to commercial use, and has supplied User with the results of said engineering pertinent to User's production; and

Whereas, User desires to use said Process and benefit from Ransburg's engineering;

Now, therefore, it is mutually agreed as follows:

1. License: In consideration of the payment by User of the fees herein provided, Ransburg hereby grants to User, subject to and in accordance with all of the terms and conditions of this agreement and while the same is in effect, a nonexclusive, nonassignable license to use said Process at User's plant in .....,
with one unit as shown in Ransburg's Drawing No. .....,
subject to such changes therein and such further specifications as Ransburg may prescribe, for electrostatically detearing .....,
but said license shall not include the right to use said Process in the coating of piezo-electric devices and magnetic recording and/or reproducing apparatus.

2. Supervision: Ransburg or any of its agents or duly authorized representatives shall, without notice and at any time during User's regular business hours, have access to User's premises where said unit is installed for the purpose of determining the manner in and extent to which User is using said Process so that, to the extent Ransburg deems it desirable, Ransburg may make engineering and/or operating recommendations.

3. Conversion: Upon written request of User and upon terms to be agreeable to both parties, Ransburg will license the use of said Process otherwise than as described in Paragraph 1 unless, in Ransburg's opinion, the requested use involves unsafe practice or impractical conditions or is in conflict with the policies or commitments of Ransburg. Such conversion shall be made only after Ransburg has agreed thereto in writing.

4. Liability: User agrees that Ransburg shall not be liable to User for any loss, cost, expense, or damage arising from any failure of said Process to function in any particular manner or to electrostatically detear any particular article or assembly, or for any claim resulting from the use, operation, or condition of the electrostatic unit with which said Process is used. User further agrees to reimburse Ransburg for any loss, cost, expense, or damage which may be sustained as a result of any liability to third parties for any claim resulting from the use, operation, or condition of the electrostatic unit with which said Process is used.

5. Performance: The performance of the obligations of both parties hereunder is subject to strikes and lockouts, whether in the organization of either party or elsewhere, and to accidents, fires, delays in manufacture or transportation, acts of God, embargoes, or any governmental action, as well as any causes for postponement or non-performance over which the parties have no control; and any failure,

due to any of such causes, of either party to perform any of its obligations herein set forth shall not be considered a violation of this agreement.

6. Termination: User shall have the right to terminate this agreement at any time upon thirty days' written notice to Ransburg, provided User has fulfilled its obligations hereunder. Ransburg shall have the right to terminate this agreement at any time after three years from the date of Ransburg's acceptance hereof upon six months' written notice to User.

In the event User shall fail to perform any of the conditions or obligations of this agreement, and such failure shall continue or recur after written notice thereof from Ransburg, Ransburg may (without prejudice to its rights to recover any amounts owing by User as herein provided or any damages for breach of this agreement) terminate this agreement forthwith. Any delay, concession, or indulgence on the part of Ransburg in enforcing any of its rights on any default shall not be deemed a waiver of such rights.

7. Use of Equipment: User agrees to follow Ransburg's safety and operating recommendations and to maintain Ransburg's equipment in as good condition as when installed, ordinary wear and tear from proper use and operation alone excepted. User agrees that it shall not use or operate Ransburg's equipment with any of the parts or safety devices removed and to reimburse Ransburg for loss of or damage to Ransburg's equipment while in User's possession or custody, ordinary wear and tear from proper use and operation alone excepted.

8. Performance: The performance of the obligations of both parties hereunder is subject to strikes and lockouts, whether in the organization of either party or elsewhere, and to accidents, fires, delays in manufacture or transportation, acts of God, embargoes or any governmental action,

as well as any causes for postponement or non-performance over which the parties have no control; and any failure, due to any of such causes, of either party to perform any of its obligations herein set forth shall not be considered a violation of this agreement.

9. Title: Title to all equipment furnished by Ransburg shall at all times remain in Ransburg, and said equipment shall remain personal property regardless of how it is affixed to the realty. Ransburg shall have at all times, during business hours, the right to enter User's premises for the purpose of determining whether its equipment and said Process are being used as herein provided. User shall not have the right, without the written consent of Ransburg, to (1) lease or grant the right to use the equipment furnished by Ransburg to any person, firm, or corporation, (2) remove it from the plant to which it is delivered for installation, or (3) use it for any purpose or in any manner other than as herein provided. Upon termination of this agreement, User agrees to deliver the equipment furnished by Ransburg, freight prepaid, to Ransburg at Indianapolis, Indiana, in as good condition as when installed, ordinary wear and tear incident to its proper use and operation alone excepted.

10. Termination: User shall have the right to terminate this agreement at any time upon thirty days' written notice to Ransburg, provided User has fulfilled its obligations hereunder and returns Ransburg's equipment prepaid to Ransburg within thirty days after such notification in as good condition as when installed, ordinary wear and tear from proper use and operation alone excepted. Ransburg shall have the right to terminate this agreement at any time after three years from the date of Ransburg's acceptance hereof upon six months' written notice to User.

In the event User shall fail to perform any of the conditions or obligations of this agreement, and such failure

shall continue or recur after written notice thereof from Ransburg, Ransburg may (without prejudice to its rights to recover any amounts owing by User as herein provided or any damages for breach of this agreement) terminate this agreement and take possession of its equipment forthwith; and for that purpose permission is hereby given Ransburg or any of its agents to enter any premises wherein its equipment is located to discover and take possession of its equipment without notice and without being liable to any suit, action, indictment, or other proceedings by User or anyone claiming under it. Any delay, concession, or indulgence on the part of Ransburg in enforcing any of its rights on any default shall not be deemed a waiver of such rights.

11. Fees: User agrees to pay to Ransburg an initial fee of .....

.....

within sixty days after date of shipment of Ransburg's equipment or thirty days after date of installation thereof, whichever occurs earlier. User further agrees to pay Ransburg, on or before the tenth day of each calendar month during the life of this agreement, a monthly fee of Fifty Dollars, which amount is due in any event and is hereinafter referred to as the basic minimum monthly fee, plus an additional .....

.....

for each 200 hours, or fraction thereof, of use of said Process during each such calendar month. Monthly fees under this agreement shall start with the date of installation of Ransburg's equipment or thirty days after the date of shipment thereof from Ransburg's plant, whichever occurs earlier, and the first payment shall be made on or before the tenth of the calendar month following. For the first and last payments of monthly fees under this agreement, the basic minimum monthly fee shall be prorated

according to the portion of the month for which it is payable.

In addition to the above fees, User agrees to pay, or to reimburse Ransburg if it should be obliged to pay, directly or indirectly, any taxes, licenses, or fees imposed by the laws of any State, of any political subdivision, of any municipality, or of any other governmental authority by reason of the installation, possession, use, or location of any equipment furnished by Ransburg pursuant to this agreement. Such sums as may be due under this provision shall be paid separately or added to the invoice for other payments as the law may require or as Ransburg may determine

If User does not request shipment of Ransburg's equipment prior to the expiration of six months after the date of Ransburg's acceptance of this agreement, Ransburg shall have the right, prior to shipment of its equipment, to change the fees and conditions of this agreement to conform to its policy as of the date of such shipment.

During the term of this agreement, the monthly fee specified above and the sum set forth in Paragraph 3 shall from time to time be adjusted commensurately with changes, from the value for May 15, 1950, in the Consumer Price Index, Large Cities Combined, as determined by the Bureau of Labor Statistics of the U. S. Department of Labor, on the 1947-49 base; provided, however, that only a change of at least ten percentage points in the value of said Index shall require any such adjustment.

User agrees to keep permanent books of account from which the correctness of the monthly payments made under this agreement can be verified and agrees that such books of account shall be open to inspection by Ransburg or its duly authorized representatives at any time during User's regular business hours.

12. Execution of Agreement: This agreement sets

forth the entire agreement and understanding between the parties as to the subject matter of this agreement, and no statements, conditions, or representations, either oral or written, made by the parties, their employees, or agents, including conditions or provisions appearing in any purchase order or other instrument issued by User, shall be valid or binding unless contained in a written instrument signed by both parties. Ransburg makes no warranties of any kind, express or implied, except as set forth in this agreement.

All the rights and privileges of Ransburg hereunder shall be extended to and inure to the benefit of the successors in business or assigns of Ransburg upon User being given written notice of the assignment of this agreement to such successors in business or assigns and upon the written acceptance by such successors in business or assigns of all Ransburg's obligations hereunder.

This agreement is submitted in quadruplicate for execution by User. It shall become a contract only upon its execution and acceptance by Ransburg at Ransburg's home office in Indianapolis, Indiana, and shall be effective under the laws of the State of Indiana.

In Witness Whereof, the parties have caused this agreement to be executed by an authorized officer or person effective as of the date of acceptance by Ransburg set forth below.

.....(User)

By.....

(Title)

Executed and accepted this.....day of .....,195.....

Ransburg Electro-Coating Corp. (Ransburg)

By.....

(Title)

Form No. 238.

7. Fees: User agrees to pay to Ransburg an initial fee of .....

.....

within thirty days after date of acceptance of this agreement by Ransburg. User further agrees to pay to Ransburg, on or before the tenth day of each calendar month during the life of this agreement, a monthly fee of Forty Dollars, which amount is due in any event and is hereinafter referred to as the basic minimum monthly fee, plus an additional .....

.....

for each 200 hours, or fraction thereof, of use of said Process during each such calendar month. Monthly fees under this agreement shall start on the date User begins to use said Process under this agreement or thirty days after the date of acceptance of this agreement by Ransburg, whichever occurs earlier, and the first payment shall be made on or before the tenth day of the calendar month following. For the first and last payments of monthly fees under this agreement, the basic minimum monthly fee shall be prorated according to the portion of the month for which it is payable.

During the term of this agreement, the monthly fee specified above shall from time to time be adjusted commensurately with changes, from the value for May 15, 1950, in the Consumer Price Index, Large Cities Combined, as determined by the Bureau of Labor Statistics of the U. S. Department of Labor, on the 1947-49 base; provided, however, that only a change of at least ten percentage points in the value of said Index shall require any such adjustment.

User agrees to keep permanent books of account from which the correctness of the monthly payments made under this agreement can be verified and agrees that such books of account shall be open to inspection by Ransburg or its

duly authorized representatives at any time during User's regular business hours.

8. Execution of Agreement: This agreement sets forth the entire agreement and understanding between the parties as to the subject matter of this agreement, and no statements, conditions, or representations, either oral or written, made by the parties, their employees, or agents, including conditions or provisions appearing in any purchase order or other instrument issued by User, shall be valid or binding unless contained in a written instrument signed by both parties.

All the rights and privileges of Ransburg hereunder shall be extended to and inure to the benefit of the successors in business or assigns of Ransburg upon User being given written notice of the assignment if this agreement to such successors in business or assigns and upon the written acceptance by such successors in business or assigns of all Ransburg's obligations hereunder.

This agreement is submitted in quadruplicate for execution by User. It shall become a contract only upon its execution and acceptance by Ransburg at Ransburg's home office in Indianapolis, Indiana, and shall be effective under the laws of the State of Indiana.

In Witness Whereof, the parties have caused this agreement to be executed by an authorized officer or person effective as of the date of acceptance by Ransburg set forth below.

.....(User)

By.....

(Title)

Executed and accepted this.....day of .....,195....

Ransburg Electro-Coating Corp. (Ransburg)

By.....

(Title)

Form No. 239.

Serial No.

Ransburg Electrostatic Spray-Process Agreement.

This agreement, entered into by and between Ransburg Electro-Coating Corp., an Indiana corporation, having its principal place of business at Indianapolis, Indiana, hereinafter called "Ransburg," and

.....

.....

hereinafter called "User," Witnesseth:

Whereas, Ransburg is the owner of, or otherwise has the right to grant licenses under, certain United States letters patent and inventions all pertaining to and covering methods and apparatus used in the electrostatic coating of articles, the process so used being referred to as "said Process," has acquired much engineering data and experience pertaining to said Process, is conducting research in that field, has performed a substantial amount of engineering in adapting said Process to commercial use, has supplied User with the results of said engineering pertinent to User's production, and has designed special equipment therefor; and

Whereas, User desires to use said Process and benefit from Ransburg's engineering and requests that Ransburg furnish certain special equipment hereinbefore described;

Now, therefore, it is mutually agreed as follows:

1. License: In consideration of the payment by User of the fees herein provided, Ransburg hereby grants to User, subject to and in accordance with all of the terms and conditions of this agreement and while the same is in effect, a nonexclusive, nonassignable license to use said Process at User's plant in ....., with one unit as shown in Ransburg's drawing No. ....., subject to such changes therein and such further specifi-

cations as Ransburg may prescribe, for electrostatically spraying ..... but said license shall not include the right to the said Process in the Manufacture of abrasive articles, flock-coated articles, or articles coated with fiber-shaped particles.

2. Equipment: Ransburg will furnish User, for its use of said Process, one voltage pack and electrical controls, electrodes and insulating supports therefor, and high-voltage lead-in means, which will be shipped prepaid to User's aforesaid plant upon request of User. As parts of Ransburg's equipment become defective, User agrees to return prepaid all such defective parts to Ransburg promptly. Ransburg will furnish replacements, without charge, of any such defective parts which become defective as a result of ordinary wear and tear from proper use and operation, provided such parts are returned to Ransburg within thirty days after they become defective. If said defective parts become defective from improper use, operation, or negligence of User or if said defective parts are not returned to Ransburg within said thirty-day period, User agrees to pay Ransburg Ransburg's standard charges for furnishing replacements for said defective parts. The furnishing of equipment and replacements by Ransburg is subject to the availability to Ransburg of the necessary component parts of the equipment and replacements and to prior shipment commitments of Ransburg. User shall furnish all labor, materials, and equipment necessary for the use of said Process except the equipment to be furnished by Ransburg in accordance with this paragraph.

3. Supervision: Ransburg will furnish supervision necessary for placing its equipment in readiness for operation. Should Ransburg's supervisor make more than one trip to the plant of User or be delayed there for any cause not chargeable to Ransburg, then for each day of

such trip or trips or of such delay, User shall pay Ransburg the sum of Seventy-five Dollars and any necessary transportation expenses incurred thereby.

4. Conversion: Ransburg will grant, upon written request by User, a license to use said Process otherwise than as described in Paragraph 1 unless, in Ransburg's opinion, the requested use involves unsafe practices or impractical conditions or is in conflict with the policies or commitments of Ransburg. Such conversion shall be made only after Ransburg has agreed thereto in writing.

5. Patent Infringement Indemnification: Ransburg agrees to indemnify User (but not in an amount in excess of the total fees paid pursuant to Paragraph 11 hereof) against any liability for infringement of letters patent by said Process if used in accordance with the terms and provisions hereof and to undertake at its expense the defense of any suit brought against User for such infringement, provided User shall promptly notify Ransburg of any such claim of infringement, permit Ransburg to assume the defense thereof, and cooperate with Ransburg in respect thereto and in respect to any necessary changes of equipment or use thereof.

6. Liability: User agrees that Ransburg shall not be liable to User for any loss, cost, expense, or damage arising from any failure of said Process or equipment to function in any particular manner or to electrostatically spray any particular article or assembly, or for any claim (other than as provided in Paragraph 5) resulting from the use, operation, or condition of the equipment furnished by Ransburg while said equipment is in the possession or custody of User. User further agrees to reimburse Ransburg for any loss, cost, expense, or damage which may be sustained as a result of any liability to third parties for any claim (other than as provided in Paragraph 5) resulting from the use, operation, or condition of the equipment

furnished by Ransburg while said equipment is in the possession or custody of User.

7. Use of Equipment. User agrees to follow Ransburg's safety and operating recommendations and to maintain Ransburg's equipment in as good condition as when installed, ordinary wear and tear from proper use and operation alone excepted. User agrees that it shall not use or operate Ransburg's equipment with any of the parts or safety devices removed and to reimburse Ransburg for loss of or damage to Ransburg's equipment while in User's possession or custody, ordinary wear and tear from proper use and operation alone excepted.

8. Performance: The performance of the obligation of both parties hereunder is subject to strikes and lockouts, whether in the organization of either party or elsewhere, and to accidents, fires, delays in manufacture or transportation, acts of God, embargoes or any governmental action, as well as any causes for postponement or non-performance over which the parties have no control; and any failure, due to any of such causes, of either party to perform any of its obligations herein set forth shall not be considered a violation of this agreement.

9. Title: Title to all equipment furnished by Ransburg shall at all times remain in Ransburg and said equipment shall remain personal property regardless of how it is affixed to the realty. Ransburg shall have at all times, during business hours, the right to enter User's premises for the purpose of determining whether its equipment and said Process are being used as herein provided. User shall not have the right, without the written consent of Ransburg, to (1) lease or grant the right to use the equipment furnished by Ransburg to any person, firm, or corporation, (2) remove it from the plant to which it is delivered for installation, or (3) use it for any purpose or in any manner other than as herein provided. Upon termi-

nation of this agreement, User agrees to deliver the equipment furnished by Ransburg, freight prepaid, to Ransburg at Indianapolis, Indiana, in as good condition as when installed, ordinary wear and tear incident to its proper use and operation alone excepted.

10. Termination: User shall have the right to terminate this agreement at any time upon thirty days' written notice to Ransburg, provided User has fulfilled its obligations hereunder and returns Ransburg's equipment to Ransburg prepaid within thirty days after such notification in as good condition as when installed, ordinary wear and tear from proper use and operation alone excepted. Ransburg shall have the right to terminate this agreement at any time after three years from the date of Ransburg's acceptance hereof upon six months' written notice to User.

In the event User shall fail to perform any of the conditions or obligations of this agreement, and such failure shall continue or recur after written notice thereof from Ransburg, Ransburg may (without prejudice to its right to recover any amounts owing by User as herein provided or any damages for breach of this agreement) terminate this agreement and take possession of its equipment forthwith, and for that purpose permission is hereby given Ransburg or any of its agents to enter any premises wherein its equipment is located, to discover and take possession of its equipment without notice and without being liable to any suit, action, indictment, or other proceedings by User or anyone claiming under it. Any delay, concession, or indulgence on the part of Ransburg in enforcing any of its rights on any default shall not be deemed a waiver of such rights.

11. Fees: User agrees to pay to Ransburg an initial fee of .....

.....

within sixty days after date of shipment of Ransburg's

equipment or thirty days after date of installation thereof, which ever occurs earlier. User further agrees to pay to Ransburg, on or before the tenth day of each calendar month during the life of this agreement, a basic minimum monthly fee of One Hundred Dollars ($100.00), which fee is due in any event, and in addition thereto a monthly fee based on the cost to User of the coating material (including all its ingredients) used in said unit during the preceding calendar month in accordance with the following schedule:

Monthly Cost of Coating Material	Monthly Fee
Less than $4,000.00	10% of Cost
$4,000.00 to $8,000.00	$400.00 plus 5% of Cost over $4,000.00
In Excess of $8,000.00	$600.00

Monthly fees under this agreement shall start with the date of installation of Ransburg's equipment or thirty days after the date of shipment thereof from Ransburg's plant, whichever occurs earlier, and the first payment shall be made on or before the tenth day of the calendar month following. For the first and last payments of monthly fees under this agreement, the basic minimum monthly fee specified above shall be prorated according to the portion of the month for which it is payable.

In addition to the above fees, User agrees to pay, or to reimburse Ransburg if it should be obliged to pay, directly or indirectly, any taxes, licenses, or fees imposed by the laws of any State, or any political subdivision, of any municipality, or of any other governmental authority by reason of the installation, possession, use, or location of any equipment furnished by Ransburg pursuant to this agreement. Such sums as may be due under this provision shall be paid separately or added to the invoice for other payments as the law may require or as Ransburg may determine.

If User does not request shipment of Ransburg's equipment prior to the expiration of six months after the date of Ransburg's acceptance of this agreement, Ransburg shall have the right, prior to shipment of its equipment, to change the fees and conditions of this agreement to conform to its policy as of the date of such shipment.

During the term of this agreement, the basic minimum monthly fee specified above, the sums set forth in the above columns entitled "Monthly Cost of Coating Material" and "Monthly Fee," and the sum set forth in Paragraph 3 shall from time to time be adjusted commensurately with changes, from the value for May 15, 1950, in the Consumer Price Index, Large Cities Combined, as determined by the Bureau of Labor Statistics of the U. S. Department of Labor, on the 1947-49 base; provided, however, that only a change of at least ten percentage points in the value of said Index shall require any such adjustment.

Upon request of Ransburg, User shall supply Ransburg with a written report showing the monthly quantity of coating material used in said unit and the cost to User of said coating material. User agrees to keep permanent books of account from which the correctness of said written reports can be verified and agrees that such books of account shall be open to inspection by Ransburg or its duly authorized representatives at any time during User's regular business hours.

12. Execution of Agreement: This agreement sets forth the entire agreement and understanding between the parties as to the subject matter of this agreement, and no statements, conditions, or representations, either oral or written, made by the parties, their employees, or agents, including conditions or provisions appearing in any purchase order or other instrument issued by User, shall be valid or binding unless contained in a written instrument signed by both parties. Ransburg makes no warranties of any

kind, express or implied, except as set forth in this agreement.

All the rights and privileges of Ransburg hereunder shall be extended to and inure to the benefit of the successors in business or assigns of Ransburg upon User being given written notice of the assignment of this agreement to such successors in business or assigns and upon the written acceptance by such successors in business or assigns of all Ranburg's obligation hereunder.

This agreement is submitted in quadruplicate for execution by User. It shall become a contract only upon its execution and acceptance by Ransburg at Ransburg's home office in Indianapolis, Indiana, and shall be effective under the laws of the State of Indiana.

In Witness Whereof, the parties have caused this agreement to be executed by an authorized officer or person effective as of the date of acceptance by Ransburg set forth below.

Executed and accepted this ..... day of ..... 195....

..... (User)

By .....

(Title)

Ransburg Electro-Coating Corp.
(Ransburg)

By .....

(Title)

Form No. 138.

Ransburg Electrostatic Spray Process Agreement.

This agreement, entered into by and between Ransburg Electro-Coating Corp., an Indiana corporation, having its principal place of business at Indianapolis, Indiana, hereinafter called "Ransburg," and .....

.....

hereinafter called "User," Witnesseth:

Whereas, Ransburg is the owner of, or otherwise has the right to grant licenses under, certain United States letters patent and inventions all pertaining to and covering methods and apparatus used in the electrostatic coating of articles, the process so used being referred to as "said Process," has acquired much engineering data and experience pertaining to said Process, is conducting research in that field, has performed a substantial amount of engineering in adapting said Process to commercial use, and has supplied User with the results of said engineering pertinent to User's production; and

Whereas, User desires to use said Process and benefit from Ransburg's engineering;

Now, therefore, it is mutually agreed as follows:

1. License: In consideration of the payment by User of the fees herein provided, Ransburg hereby grants to User, subject to and in accordance with all of the terms and conditions of this agreement and while the same is in effect, a nonexclusive, nonassignable license to use said Process at User's plant in .....,
with one unit as shown in Ransburg's Drawing No. .....,
subject to such changes therein and such further specifications as Ransburg may prescribe, for electrostatically spraying .....,
but said license shall not include the use of said Process in the manufacture of abrasive articles, flock-coated articles, or articles coated with fiber-shaped particles.

2. Supervision: Ransburg or any of its agents or duly authorized representatives shall, without notice and at any time during User's regular business hours, have access to User's premises where said unit is installed for the purpose of determining the manner in and extent to which User is using said Process so that, to the extent Ransburg deems it desirable, Ransburg may make engineering and/or operating recommendations.

3. Conversion: Upon written request of User and upon terms to be agreeable to both parties, Ransburg will license the use of said Process otherwise than as described in Paragraph 1 unless, in Ransburg's opinion, the requested use involves unsafe practices or impractical conditions or is in conflict with the policies or commitments of Ransburg. Such conversion shall be made only after Ransburg has agreed thereto in writing.

4. Liability: User agrees that Ransburg shall not be liable to User for any loss, cost, expense, or damage arising from any failure of said Process to function in any particular manner or to electrostatically coat any particular article or assembly, or for any claim resulting from the use, operation, or condition of the electrostatic unit with which said Process is used. User further agrees to reimburse Ransburg for any loss, cost, expense, or damage which may be sustained as a result of any liability to third parties for any claim resulting from the use, operation, or condition of the electrostatic unit with which said Process is used.

5. Performance: The performance of the obligations of both parties hereunder is subject to strikes and lockouts, whether in the organization of either party or elsewhere, and to accidents, fires, delays in manufacture or transportation, acts of God, embargoes, or any governmental action, as well as any causes for postponement or non-performance over which the parties have no control; and any failure, due

to any of such causes, of either party to perform any of its obligations herein set forth shall not be considered a violation of this agreement.

6. Termination: User shall have the right to terminate this agreement at any time upon thirty days' written notice to Ransburg, provided User has fulfilled its obligations hereunder. Ransburg shall have the right to terminate this agreement at any time after three years from the date of Ransburg's acceptance hereof upon six months' written notice to User.

In the event User shall fail to perform any of the conditions or obligations of this agreement, and such failure shall continue or recur after written notice thereof from Ransburg, Ransburg may (without prejudice to its rights to recover any amounts owing by User as herein provided or any damages for breach of this agreement) terminate this agreement forthwith. Any delay, concession, or indulgence on the part of Ransburg in enforcing any of its rights on any default shall not be deemed a waiver of such rights.

7. Fees: User agrees to pay to Ransburg an initial fee of .....

.....

within thirty days after the date of acceptance of this agreement by Ransburg. User further agrees to pay Ransburg, on or before the tenth day of each calendar month during the life of this agreement,

Monthly fees under this agreement shall start on the date User begins to use said Process under this agreement or thirty days after the date of acceptance of this agreement by Ransburg, whichever occurs earlier, and the first payment shall be made on or before the tenth day of the calendar month following. For the first and last payments of monthly fees under this agreement, the basic minimum

monthly fee shall be prorated according to the portion of the month for which it is payable.

In addition to the above fees, User agrees to pay or to reimburse Ransburg if it should be obliged to pay, directly or indirectly, any taxes, licenses, or fees imposed by the laws of any State, of any political subdivision, of any municipality, or of any other governmental authority by reason of the use or operation of said Process or the license granted under this agreement. Such sums as may be due under this provision shall be paid separately or added to the invoice for other payments as the law may require or as Ransburg may determine.

During the term of this agreement, the basic minimum monthly fee specified above shall from time to time be adjusted commensurately with changes, from the value for May 15, 1950, in the Revised Consumer Price Index, Large Cities Combined, as determined by the Bureau of Labor Statistics of the U. S. Department of Labor, on the 1947-49 base; provided, however, that only a change of at least ten percentage points in the value of said Index shall require any such adjustment.

User agrees to keep permanent books of account from which the correctness of the monthly payments made under this agreement can be verified and agrees that such books of account shall be open to inspection by Ransburg or its duly authorized representatives at any time during User's regular business hours.

8. Execution of Agreement: This agreement sets forth the entire agreement and understanding between the parties as to the subject matter of this agreement, and no statements, conditions, or representations, either oral or written, made by the parties, their employees, or agents, including conditions or provisions appearing in any purchase order or other instrument issued by User, shall be valid or binding unless contained in a written instrument

signed by both parties. Ransburg makes no warranties of any kind, express or implied, except as set forth in this agreement.

All the rights and privileges of Ransburg hereunder shall be extended to and inure to the benefit of the successors in business or assigns of Ransburg upon User being given written notice of the assignment of this agreement to such successors in business or assigns and upon the written acceptance by such successors in business or assigns of all Ransburg's obligations hereunder.

This agreement is submitted in quadruplicate for execution by User. It shall become a contract only upon its execution and acceptance by Ransburg at Ransburg's home office in Indianapolis, Indiana, and shall be effective under the laws of the State of Indiana.

In Witness Whereof, the parties have caused this agreement to be executed by an authorized officer or person effective as of the date of acceptance by Ransburg set forth below.

Executed and accepted this ..... day of ....., 195....

Ransburg Electro-Coating Corp.
(Ransburg)

By .....
(Title)

..... (User)

By .....
(Title)

Form No. 137.

DEFENDANT'S EXHIBIT NO. 27.

Ransburg Electro-Coating Corp.
Indianapolis, Indiana.

May 13, 1954

Sales Bulletin No. 130.

To: RHS EJS MFP GEK GR
EPM HEM EO EMR DCH
JEM DEC MR HJR

Subject: Pricing Guide For No. 2 Spray Process.

Gentlemen:

The attached is a new pricing schedule for the No. 2 Process. The amounts shown are intended merely as a guide for making preliminary estimates and no price should be considered as a firm quotation until confirmed by the Home Office.

The basic minimum monthly fee with equipment will be $175.00 per unit.*

Please be reminded that you are to advise all of your prospective customers that they may obtain a license without our equipment for an initial fee of $4100.00. The basic minimum monthly fee without our equipment will have to be refigured by our cost accountants. You will be advised of this when the correct figure is determined. In the meantime, if someone wishes to proceed without equipment, an equitable monthly fee arrangement will be determined.

---

* Please note carefully the new definition of a unit:
A unit is comprised of that equipment associated with one pack (not more than 4 triples or 4 discs).

All agreements issued in 1953 and up to May 13, 1954, will be honored if properly signed and in our hands by July 1, 1954, and provided the customer gives us instructions to ship prior to October 1, 1954.

Yours very truly,

Harold

Harold P. Ransb.. g.

HPR:eh

Strictly Confidential.

No. 2 Process.

Approximate Pricing Schedule:

Triples*	Pumps	Initial	Discs	Pumps	Initial
1	1 (Std)	8,000	1	1	7,300
2	1 (Std)	8,900	2	1	7,900
3	1 (Ins)	11,000	2	2	9,200
3	2 (Std)	10,900	3	3	10,900
4	1 (Ins)	11,900	4	2	10,900
4	2 (Std)	11,800			

If insulated pumps required where standard specified, add $750 for each pump.

Add for reciprocator:

36" or less..... $ 500

Between 36" & 60".... 1000

Above 60" 1500

Form No. PF54

5-13-54

* For use with single phase triples only.

Definition of a "Unit".

A unit is comprised of that equipment associated with one pack (not more than 4 triples or 4 discs).

DEFENDANT'S EXHIBIT NO. 28.

Ransburg Electro-Coating Corp.
Indianapolis, Indiana.

April 4, 1955

Sales Bulletin No. 148.

To: RHS EJS MFP HPR DCH
EPM HEM RO HJR PEABODY
JEM DEC. MR GR

Subject: Regarding Bulletin No. 147, Dated January 10, 1955 Explaining New Agreement Forms.

Gentlemen:

Attached, for your further information, is one sample copy each of the following agreement forms: Form No. 437, No. 2 License Agreement without equipment; Form No. 140, No. 1 License and Equipment Agreement; Form No. 141, No. 1 License Agreement without equipment; Form No. 241, Detearing License and Equipment Agreement; and Form No. 242, Detearing License Agreement without equipment. Forms Nos. 141, 242, and 437 are our current forms in the event any licensees desire a license only and wish to supply their own equipment or procure it from any other source.

E. M. Ransburg.

EMR/bc

Serial No. .....

Ransburg.

Electrostatic Spray Process Agreement.

This agreement, entered into by and between Ransburg Electro-Coating Corp., an Indiana corporation, having its principal place of business at Indianapolis, Indiana, hereinafter called "Ransburg," and .....

.....

.....

hereinafter called "User," Witnesseth:

Whereas, Ransburg is the owner of, or otherwise has the right to grant licenses under, certain United States letters patent and inventions pertaining to and covering methods and apparatus used in the electrostatic coating of articles, the process so used being referred to as "said Process," has acquired much engineering data and experience pertaining to said Process, is conducting research in that field, has performed a substantial amount of engineering in adapting said Process to commercial use, has supplied User with results of said engineering pertinent to User's production, and has designed special equipment therefor; and

Whereas, User desires to use said Process and benefit from Ransburg's engineering and requests that Ransburg furnish certain special equipment hereinbelow described;

Now, therefore, it is mutually agreed as follows:

1. License: In consideration of the payment by User of the fees herein provided, Ransburg hereby grants to User, subject to and in accordance with all of the terms and conditions of this agreement and while the same is in effect, a nonexclusive, nonassignable license to use said Process at User's plant in .....

....., with ..... as shown in

Ransburg's Drawing No. ....., subject to such changes therein and such further specifications as Ransburg may prescribe, for electrostatically spraying .....

.....

but said license shall not include the right to use said Process in the manufacture of abrasive articles, flock-coated articles, or articles coated with fiber-shaped particles.

2. Equipment and Supervision: Ransburg will furnish User, for its use of said Process, one voltage pack and electrical controls, electrodes and insulating supports therefor, and high voltage lead-in means, which will be shipped prepaid to User's aforesaid plant upon request of User. As parts of Ransburg's equipment become defective, User agrees to return prepaid to Ransburg promptly all such defective parts. Ransburg will furnish replacements, without charge, of any such defective parts which become defective as a result of ordinary wear and tear from proper use and operation, provided such parts are returned to Ransburg within thirty days after they become defective. If defective parts become defective from improper use, operation, or negligence of User, or if defective parts are not returned to Ransburg within said thirty-day period, User agrees to pay Ransburg Ransburg's standard charges for furnishing replacements for defective parts.

Ransburg will furnish supervision necessary for placing its equipment in readiness for operation. Should Ransburg's supervisor make more than one trip to the plant of User or be delayed there for any cause not chargeable to Ransburg, then for each day of such trip or trips or of such delay, User shall pay Ransburg the sum of Seventy-five Dollars and any necessary transportation expenses incurred thereby.

User shall furnish all labor, materials, and equipment

for the use of said Process except the equipment and supervision to be furnished by Ransburg in accordance with this paragraph.

The furnishing of equipment, replacements, and supervision by Ransburg is subject to the availability to Ransburg of the necessary component parts of the equipment and replacements, to prior shipment commitments of Ransburg, to strikes and lockouts, whether in the organization of Ransburg or elsewhere, and to accidents, fires, delays in manufacture, acts of God, court injunctions, or any governmental action, as well as any causes for postponement or non-performance over which Ransburg has no control; and any failure, due to any such causes, of Ransburg to perform any of its obligations herein set forth shall not be considered a breach of this agreement.

The first period for which monthly fees are payable shall commence with the date of installation of Ransburg's equipment, or thirty days after the date of shipment thereof by Ransburg, whichever occurs earlier. With respect to any fractional calendar month for which monthly fees are payable, the basic minimum monthly fee shall be prorated according to the portion of the month for which it is payable. Within ten days after the end of each calendar month for which monthly fees are payable, User will furnish to Ransburg upon forms furnished by Ransburg, or, in the absence thereof, upon any reasonable adequate form, a written report setting forth in reasonable detail the information upon which the aforesaid additional monthly fee may be computed, and shall pay to Ransburg at its office at Indianapolis, Indiana, the monthly fees payable for said month. User agrees to keep permanent books of account from which the correctness of said written reports can be verified and agrees that such books of account shall be open to inspection by Ransburg or its duly authorized

representatives at any time during User's regular business hours.

In addition to the above fees, User agrees to pay, or to reimburse Ransburg if it should be obliged to pay, directly or indirectly, any taxes, licenses, or fees imposed by the laws of any State, of any political subdivision, of any municipality, or of any other governmental authority by reason of the installation, possession, use, or location of any equipment furnished by Ransburg or by reason of the furnishing of any services by Ransburg pursuant to this agreement. Such sums as may be due under this provision shall be paid separately or added to the invoice for other payments as the law may require or as Ransburg may determine.

If User does not request shipment of Ransburg's equipment prior to the expiration of six months after the date of Ransburg's acceptance of this agreement, Ransburg shall have the right, prior to shipment of its equipment, to change the fees and conditions of this agreement to conform to its policy as of the date of such shipment.

During the term of this agreement, the basic minimum monthly fee specified above, the sums set forth in the above columns entitled "Monthly Cost of Coating Material" and "Monthly Fee," and the sum set forth in Paragraph 2 may from time to time be adjusted commensurately with changes, from the value for May, 1950, in the Consumer Price Index, Large Cities Combined, All Items, as determined by the Bureau of Labor Statistics of the U. S. Department of Labor, on the 1947-49 base, or any successor thereto; provided, however, no such adjustment shall be made unless a change of at least ten percentage points has occurred in said Index prior to each such adjustment.

8. Execution of Agreement: This agreement sets forth the entire agreement and understanding between the parties as to the subject matter of this agreement, and no state-

ments, conditions, or representations, either oral or written, made by the parties, their employees, or agents, including conditions or provisions appearing in any purchase order or other instrument issued by User, shall be valid or binding unless contained in a written instrument signed by both parties. Ransburg makes no warranties of any kind, express or implied, except as set forth in this agreement.

All the rights and privileges of Ransburg hereunder shall be extended to and inure to the benefit of the successors in business or assigns of Ransburg upon User being given written notice of the assignment of this agreement to such successors in business or assigns and upon the written acceptance by such successors in business or assigns of all Ransburg's obligations hereunder.

This agreement consisting of three pages is submitted in quadruplicate for execution by User. It shall become a contract only upon its execution and acceptance by Ransburg at Ransburg's home office in Indianapolis, Indiana, and shall be effective under the laws of the State of Indiana.

In Witness Whereof, the parties have caused this agreement to be executed by an authorized officer or person effective as of the date of acceptance by Ransburg set forth below.

Executed and accepted by Ransburg this ..... day of ....., 195....

.....(User)

By .....

(Title)

Ransburg Electro-Coating Corp.
(Ransburg),

By.....

140-3 (Title)

Serial No. .....

Ransburg.

Electrostatic Spray Process Agreement.

This agreement, entered into by and between Ransburg Electro-Coating Corp., an Indiana corporation having its principal place of business at Indianapolis, Indiana, hereinafter called "Ransburg," and .....

.....

.....

hereinafter called "User," Witnesseth:

Whereas, Ransburg is the owner of, or otherwise has the right to grant licenses under, certain United States letters patent and inventions pertaining to and covering methods and apparatus used in electrostatically depositing liquid spray particles atomized with the use of compressed air the process so used being referred to as "said Process," has acquired much engineering data and experience pertaining to said Process, is conducting research in that field, has performed a substantial amount of engineering in adapting said Process to commercial use, has supplied User with results of said engineering pertinent to User's production;

Whereas, User desires to use said Process and benefit from Ransburg's engineering;

Now, therefore, it is mutually agreed as follows:

1. License: In consideration of the payment by User of the fees herein provided, Ransburg hereby grants to User, subject to and in accordance with all of the terms and conditions of this agreement and while the same is in effect, a nonexclusive, nonassignable license to use said Process at User's plant in .....

....., with ..... as shown in

Ransburg's Drawing No. ....., subject to such changes therein and such further specifications as Ransburg may prescribe, for electrostatically spraying .....

.....

but said license shall not include the right to use said Process in the manufacture of abrasive articles, flock-coated articles, or articles coated with fiber-shaped particles.

Supervision: Ransburg or any of its agents or duly authorized representatives shall have access without notice and at any time during User's regular business hours, to User's premises where said unit or units are installed for the purpose of determining the manner in and extent to which User is using said Process so that, to the extent Ransburg deems it desirable, Ransburg may make engineering and/or operating recommendations.

3. Liability: User agrees that Ransburg shall not be liable to User for any loss, cost, expense, or damage resulting from any failure of said Process to function in any particular manner or to electrostatically coat any particular article or assembly or resulting from the presence, use, operation or condition of the electrostatic unit or units with which said Process is used or resulting from any act or omission of Ransburg's employees or agents while on the premises of User. Also, User agrees to indemnify Ransburg for any loss, cost, expense, or damage Ransburg may sustain because of any claims by third parties resulting from the presence, use, operation or condition of the electrostatic unit or units with which said Process is used or resulting from any act or omission of Ransburg's employees or agents while on the premises of User.

4. Termination: User shall have the right to terminate this agreement at any time upon thirty days' written notice to Ransburg, provided User has fulfilled its obligations hereunder. Ransburg shall have the right to terminate

this agreement at any time after three years from the date of Ransburg's acceptance hereof upon six months' written notice to User.

In the event User shall fail to perform any of the conditions or obligations of this agreement, and such failure shall continue to recur after written notice thereof from Ransburg, Ransburg may (without prejudice to its right to recover any amounts owing by User as herein provided or any damages for breach of this agreement) terminate this agreement forthwith. Any delay, concession, or indulgence on the part of Ransburg in enforcing any of its rights on any default shall not be deemed a waiver of such rights.

5. Fees: User agrees to pay to Ransburg an initial fee of .....

.....

within thirty days after date of acceptance of this agreement by Ransburg. For each calendar month during which this agreement is in effect, User also agrees to pay to Ransburg monthly fees consisting of the following: (1) a basic minimum monthly fee of Eighty Dollars, which shall be payable regardless of whether said Process is used, or to what extent it is used; and (2) an additional monthly fee based upon the cost to User of the coating material (including all of its ingredients) used in said unit or units during said month, in accordance with the following schedule:

Monthly Cost of Coating Material	Monthly Fee
Less than $4,000.00	10% of Cost
$4,000.00 to $8,000.00	$400.00 plus 5% of Cost of over $4,000.00
In Excess of $8,000.00	$600.00

The first period for which monthly fees are payable shall commence with the date User begins to use said Process under this agreement or thirty days after the date of acceptance of this agreement by Ransburg, whichever occurs earlier. With respect to any fractional calendar month for which monthly fees are payable, the basic minimum monthly fee shall be prorated according to the portion of the month for which it is payable. Within ten days after the end of each calendar month for which monthly fees are payable, User will furnish to Ransburg upon forms furnished by Ransburg, or, in the absence thereof, upon any reasonably adequate form, a written report setting forth in reasonable detail the information upon which the aforesaid additional monthly fee may be computed, and shall pay to Ransburg at its office at Indianapolis, Indiana, the monthly fees payable for said month. User agrees to keep permanent books of account from which the correctness of said written reports can be verified and agrees that such books of account shall be open to inspection by Ransburg or its duly authorized representatives at any time during User's regular business hours.

In addition to the above fees, User agrees to pay, or to reimburse Ransburg if it should be obliged to pay, directly or indirectly, any taxes, licenses, or fees imposed by the laws of any State, of any political subdivision, of any municipality, or of any other governmental authority by reason of the use or operation of said Process or the license granted under this agreement. Such sums as may be due under this provision shall be paid separately or added to the invoice for other payments as the law may require or as Ranburg may determine.

During the terms of this agreement, the basic minimum monthly fee specified above and the sums set forth in the above columns entitled "Monthly Cost of Coating Material" and "Monthly Fee," may from time to time be

adjusted commensurately with changes, from the value for May, 1950, in the Consumer Price Index, Large Cities Combined, All Items, as determined by the Bureau of Labor Statistics of the U. S. Department of Labor, on the 1947-49 base, or any successor thereto; provided, however, no such adjustment shall be made unless a change of at least ten percentage points has occurred in said Index prior to each such adjustment.

6. Execution of Agreement: This agreement sets forth the entire agreement and understanding between the parties as to the subject matter of this agreement, and no statements, conditions, or representations, either oral or written, made by the parties, their employees, or agents, including conditions or provisions appearing in any purchase order or other instrument issued by User, shall be valid or binding unless contained in a written instrument signed by both parties. Ransburg makes no warranties of any kind, express or implied, except as set forth in this agreement.

All the rights and privileges of Ransburg hereunder shall be extended to and inure to the benefit of the successors in business or assigns of Ransburg upon User being given written notice of the assignment of this agreement to such successors in business or assigns and upon the written acceptance by such successors in business or assigns of all Ransburg's obligations hereunder.

This agreement consisting of two pages is submitted in quadruplicate for execution by User. It shall become a contract only upon its execution and acceptance by Ransburg at Ransburg's home office in Indianapolis, Indiana, and shall be effective under the laws of the State of Indiana.

In Witness Whereof, the parties have caused this agreement to be executed by an authorized officer or person effective as of the date of acceptance by Ransburg set forth below.

Executed and accepted by Ransburg this ..... day of ....., 195....

.....(User)

By.....

(Title)

Ransburg Electro-Coating Corp. (Ransburg),

By .....

(Title)

Serial No.....

Ransburg

Electrostatic Detearing Agreement.

This agreement, entered into by and between Ransburg Electro-Coating Corp., an Indiana corporation, having its principal place of business at Indianapolis, Indiana, hereinafter called "Ransburg," and .....

.....,

hereinafter called "User," Witnesseth:

Whereas, Ransburg owns certain United States letters patent and inventions pertaining to and covering methods and apparatus used in the electrostatic detearing of articles, the process so used being referred to as "said Process," has acquired much engineering data and experience pertaining to said Process, is conducting research in that field, has performed a substantial amount of engineering in adapting said Process to commercial use, has supplied User with results of said engineering pertinent to User's production, and has designed special equipment therefor; and

Whereas, User desires to use said Process and benefit

from Ransburg's engineering and requests that Ransburg furnish certain special equipment hereinbefore described;

Now, therefore, it is mutually agreed as follows:

1. License: In consideration of the payment by User of the fees herein provided, Ransburg hereby grants to User, subject to and in accordance with all of the terms and conditions of this agreement and while the same is in effect, a nonexclusive, nonassignable license to use said Process at User's plant in ....., with ..... as shown in Ransburg's Drawing No. ....., subject to such changes therein and such further specifications as Ransburg may prescribe, for electrostatically detearing .....

.....,

but said license shall not include the right to use said Process in the coating of piezo-electric devices and magnetic recording and/or reproducing apparatus.

2. Equipment and Supervision: Ransburg will furnish User, for its use of said Process, one voltage pack and electrical controls, electrodes and insulating supports therefor, and high voltage lead-in means, which will be shipped prepaid to User's aforesaid plant upon request of User. As parts of Ransburg's equipment become defective, User agrees to return prepaid to Ransburg promptly all such defective parts. Ransburg will furnish replacements, without charge, of any such defective parts which become defective as a result of ordinary wear and tear from proper use and operation, provided such parts are returned to Ransburg within thirty days after they become defective. If defective parts become defective from improper use, operation, or negligence of User or if defective parts are not returned to Ransburg within said thirty-day period, User agrees to pay Ransburg Ransburg's standard charges for furnishing replacements for defective parts.

Ransburg will furnish supervision necessary for placing

its equipment in readiness for operation. Should Ransburg's supervision make more than one trip to the plant of User or be delayed there for any cause not chargeable to Ransburg; then for each day of such trip or trips or of such delay, User shall pay Ransburg the sum of Seventy-five Dollars and any necessary transportation expenses incurred thereby.

User shall furnish all labor, materials, and equipment necessary for the use of said Process except the equipment and supervision to be furnished by Ransburg in accordance with this paragraph.

The furnishing of equipment, replacement and supervision by Ransburg is subject to the availability to Ransburg of the necessary component parts of the equipment and replacements, to prior shipment commitments of Ransburg, to strikes and lockouts, whether in the organization of Ransburg or elsewhere, and to accidents, fires, delays in manufacture or transportation, acts of God, court injunctions, or any governmental action, as well as any causes for postponement or non-performance over which Ransburg has no control; and any failure, due to any of such causes, of Ransburg to perform any of its obligations herein set forth shall not be considered a breach of this agreement.

3. Title and Use of Equipment: Title to all equipment furnished by Ransburg including replacements shall at all times remain in Ransburg, and said equipment shall remain personal property regardless of how it is affixed to the realty. Ransburg shall have at all times, during business hours, the right to enter User's premises for the purpose of determining whether its equipment and said Process are being used as herein provided. User shall not have the right, without the written consent of Ransburg, to (1) lease or grant the right to use the equipment furnished by Ransburg to any person, firm, or corporation, (2) remove it from the plant to which it is delivered for installa-

tion, or (3) use it for any purpose or in any manner other than as herein provided.

User agrees that it shall not use or operate Ransburg's equipment with any of the parts or safety devices removed, that it shall follow Ransburg's safety and operating recommendations, and that it shall maintain Ransburg's equipment in as good condition as when installed, ordinary wear and tear from proper use and operation alone excepted.

4. Patent Infringement Indemnification: Ransburg agrees to indemnify User (but not in an amount in excess of the total fees paid pursuant to Paragraph 7 hereof) against any liability for infringement of letters patent by said Process if used in accordance with the terms and provisions hereof and to undertake at its expense the defense of any suit brought against User for such infringement, provided User shall promptly notify Ransburg of any such claim of infringement, permit Ransburg to assume the defense thereof, and cooperate with Ransburg in respect thereto and in respect to any necessary changes of equipment or use thereof.

5. Liability: User agrees that Ransburg shall not be liable to User (except as provided in Paragraph 4) for any loss, cost, expense, or damage resulting from any failure of said Process or equipment to function in any particular manner or to electrostatically detear any particular article or assembly or resulting from the installing, servicing, adjusting, presence, use, operation or condition of Ransburg's equipment or resulting from any act or omission of Ransburg's employees or agents while on the premises of User. Also, User agrees to indemnify Ransburg for any loss, cost, expense, or damage Ransburg may sustain because of any claims by third parties resulting from the installing, servicing, adjusting, presence, use, operation or condition of Ransburg's equipment or resulting from any act or omission of Ransburg's employees or agents while on the prem-

ises of User; provided, however, User shall not be liable for any loss, cost, expense, or damage Ransburg may sustain because of Ransburg's obligation set forth in Paragraph 4. User shall be liable to Ransburg for any loss of, or damage to, Ransburg's equipment occurring at any time that such equipment is in the possession of User or any of its agents, ordinary wear and tear from proper use and operation alone excepted.

6. Termination: User shall have the right to terminate this agreement at any time upon thirty days' written notice to Ransburg, provided User has fulfilled its obligations hereunder including the return of Ransburg's equipment. Ransburg shall have the right to terminate this agreement at any time after three years from the date of Ransburg's acceptance hereof upon six months' written notice to User.

In the event User shall fail to perform any of the conditions or obligations of this agreement, and such failure shall continue or recur after written notice thereof from Ransburg, Ransburg may (without prejudice to its rights to recover any amounts owing by User as herein provided or any damages for breach of this agreement) terminate this agreement and take possession of its equipment forthwith, and for that purpose permission is hereby given Ransburg or any of its agents to enter any premises wherein its equipment is located to discover and take possession of its equipment without notice and without being liable to any suit, action, indictment, or other proceedings by User or anyone claiming under it. Any delay, concession, or indulgence on the part of Ransburg in enforcing any of its rights on any default shall not be deemed a waiver of such rights.

After notice of termination of this agreement, User agrees to deliver the equipment furnished by Ransburg to Ransburg at Indianapolis, Indiana, freight prepaid, in as good condition as when installed, ordinary wear and tear

incident to its proper use and operation alone excepted.

7. Fees: User agrees to pay to Ransburg an initial fee of .....

.....,

within sixty days after date of shipment of Ransburg's equipment or thirty days after date of installation thereof, whichever occurs earlier. For each calendar month during which this agreement is in effect, User also agrees to pay to Ransburg monthly fees consisting of the following: (1) a basic minimum monthly fee of Fifty Dollars, which shall be payable regardless of whether said Process is used, or to what extent it is used; and (2) an additional monthly fee equal to One Hundred Twenty-five Dollars for each 200 hours, or any fraction thereof, of use of said Process.

The first period for which monthly fees are payable shall commence with the date of installation of Ransburg's equipment for thirty days after the date of shipment thereof by Ransburg, whichever occurs earlier. With respect to any fractional calendar month for which monthly fees are payable, the basic minimum monthly fee shall be prorated according to the portion of the month for which it is payable. Within ten days after the end of each calendar month for which monthly fees are payable, User will furnish to Ransburg upon forms furnished by Ransburg, or, in the absence thereof, upon any reasonably adequate form, a written report stating the number of hours of use of said Process during said month, with reasonably supporting details, and shall pay to Ransburg at its office in Indianapolis, Indiana, all monthly fees payable for said month. User agrees to keep permanent books of account from which the correctness of the monthly payments made under this agreement can be verified and agrees that such books of account shall be open to inspection by Ransburg or its duly authorized representatives at any time during User's regular business hours.

In addition to the above fees, User agrees to pay, or to reimburse Ransburg if it should be obliged to pay, directly or indirectly, any taxes, licenses, or fees imposed by the laws of any State, or any political subdivision, of any municipality, or of any other governmental authority by reason of the installation, possession, use, or location of any equipment furnished by Ransburg or by reason of the furnishing of any services by Ransburg pursuant to this agreement. Such sums as may be due under this provision shall be paid separately or added to the invoice for other payments as the law may require or as Ransburg may determine.

If User does not request shipment of Ransburg's equipment prior to the expiration of six months after the date of Ransburg's acceptance of this agreement, Ransburg shall have the right, prior to shipment of its equipment, to change the fees and conditions of this agreement to conform to its policy as of the date of such shipment.

During the term of this agreement, the monthly fees specified above and the sum set forth in Paragraph 2 may from time to time be adjusted commensurately with changes, from the value for May, 1950, in the Consumer Price Index, Large Cities Combined, All Items, as determined by the Bureau of Labor Statistics of the U. S. Department of Labor, on the 1947-49 base, or any successor thereto; provided, however, no such adjustment shall be made unless a change of at least ten percentage points has occurred in said Index prior to each such adjustment.

8. Execution of Agreement: This agreement sets forth the entire agreement and understanding between the parties as to the subject matter of this agreement, and no statements, conditions, or representations, either oral or written, made by the parties, their employees, or agents, including conditions or provisions appearing in any purchase order or other instrument issued by User, shall be

valid or binding unless contained in a written instrument signed by both parties. Ransburg makes no warranties of any kind, express or implied, except as set forth in this agreement.

All the rights and privileges of Ransburg hereunder shall be extended to and inure to the benefit of the successors in business or assigns of Ransburg upon User being given written notice of the assignment of this agreement to such successors in business or assigns and upon the written acceptance by such successors in business or assigns of all Ransburg's obligations hereunder.

This agreement consisting of three pages is submitted in quadruplicate for execution by User. It shall become a contract only upon its execution and acceptance by Ransburg at Ransburg's home office in Indianapolis, Indiana, and shall be effective under the laws of the State of Indiana.

In Witness Whereof, the parties have caused this agreement to be executed by an authorized officer or person effective as of the date of acceptance by Ransburg set forth below.

Executed and accepted by Ransburg this ..... day of ....., 195....

Ransburg Electro-Coating Corp.
(Ransburg)

By.....
(Title)

.....(User)

By.....
(Title)

Serial No. .....

Ransburg.

Electrostatic Detearing Agreement.

This agreement, entered into by and between Ransburg Electro-Coating Corp., an Indiana corporation, having its principal place of business at Indianapolis, Indiana, hereinafter called "Ransburg," and .....

.....

.....

.....,

hereinafter called "User," Witnesseth:

Whereas, Ransburg owns certain United States letters patent and inventions pertaining to and covering methods and apparatus used in the electrostatic detearing of articles, the process so used being referred to as "said Process" has acquired much engineering data and experience pertaining to said Process is conducting research in that field has performed a substantial amount of engineering in adapting said Process to commercial use, and has supplied User with results of said engineering pertinent to User's production; and

Whereas, User desires to use said Process and benefit from Ransburg's engineering;

Now, therefore, it is mutually agreed as follows:

1. License: In consideration of the payment by User of the fees herein provided, Ransburg hereby grants to User, subject to and in accordance with all of the terms and conditions of this agreement and while the same is in effect, a nonexclusive, nonassignable license to use said Process at User's plant in .....,
with ..... as shown in Ransburg's Drawing No. ....., subject to such changes

therein and such further specifications as Ransburg may prescribe, for electrostastically detearing .....

.....,

but said license shall not include the right to use said Process in the coating of piezo-electric devices and magnetic recording and/or reproducing apparatus.

2. Supervision: Ransburg or any of its agents or duly authorized representatives shall have access without notice and at any time during User's regular business hours, to User's premises where said unit or units are installed for the purpose of determining the manner in and extent to which User is using said Process so that, to the extent Ransburg deems it desirable, Ransburg may make engineering and/or operating recommendations.

3. Liability: User agrees that Ransburg shall not be liable to User for any loss, cost, expense, or damage resulting from any failure of said Process to function in any particular manner or to electrostatically detear any particular article or assembly or resutling from the presence, use, operation or condition of the electrostatic unit or units with which said Process is used or resulting from any act or omission of Ransburg's employees or agents while on the premises of User. Also, User agrees to indemnify Ransburg for any loss, cause, expense or damage Ransburg may sustain because of any claims by third parties resulting from the presence, use, operation or condition of the electrostatic unit or units with which said Process is used or resulting from any act or omission of Ransburg's employees or agents while on the premises of User.

4. Termination: User shall have the right to terminate this agreement at any time upon thirty days' written notice to Ransburg, provided User has fulfilled its obligations hereunder. Ransburg shall have the right to terminate this agreement at any time after three years from the date of Ransburg's acceptance hereof upon six months' written notice to User.

In the event User shall fail to perform any of the conditions or obligations of this agreement, and such failure shall continue or recur after written notice thereof from Ransburg, Ransburg may (without prejudice to its rights to recover any amounts owing by User as herein provided or any damages for breach of this agreement) terminate this agreement forthwith. Any delay, concession, or indulgence on the part of Ransburg in enforcing any of its rights on any default shall not be deemed a waiver of such rights.

5. Fees: User agrees to pay to Ransburg an initial fee of .....

.....,

within thirty days after date of acceptance of this agreement by Ransburg. For each calendar month during which this agreement is in effect, User also agrees to pay to Ransburg monthly fees consisting of the following: (1) a basic minimum monthly fee of Thirty-seven Dollars Fifty Cents, which shall be payable regardless of whether said Process is used, or to what extent it is used; and (2) an additional monthly fee equal to One Hundred Twenty-five Dollars for each 200 hours, or any fraction thereof, of use of said Process.

The first period for which monthly fees are payable shall commence with the date User begins to use said Process under this agreement, or thirty days after the date of acceptance of this agreement by Ransburg, whichever occurs earlier. With respect to any fractional calendar month for which monthly fees are payable, the basic minimum monthly fee shall be prorated according to the portion of the month for which it is payable. Within ten days after the end of each calendar month for which monthly fees are payable, User will furnish to Ransburg upon forms furnished by Ransburg, or, in the absence thereof, upon any reasonably adequate form, a written report stating the number of hours of use of said Process during said month,

with reasonably supporting details, and shall pay to Ransburg at its office in Indianapolis, Indiana, all monthly fees payable for said month. User agrees to keep permanent books of account from which the correctness of the monthly payments made under this agreement can be verified and agrees that such books of account shall be open to inspection by Ransburg or its duly authorized representatives at any time during User's regular business hours.

In addition to the above fees, User agrees to pay, or to reimburse Ransburg if it should be obliged to pay, directly or indirectly, any taxes, licenses, or fees imposed by the laws of any State, of any political subdivision, of any municipality, or of any other governmental authority by reason of the use or operation of said Process or the license granted under this agreement. Such sums as may be due under this provision shall be paid separately or added to the invoice for other payments as the law may require or as Ransburg may determine.

During the term of this agreement, the monthly fees specified above may from time to time be adjusted commensurately with changes, from the value for May, 1950, in the Consumer Price Index, Large Cities Combined, All Items, as determined by the Bureau of Labor Statistics of the U. S. Department of Labor, on the 1947-49 base, or any successor thereto; provided however, no such adjustment shall be made unless a change of at least ten percentage points has occurred in said Index prior to each such adjustment.

6. Execution of Agreement: This agreement sets forth the entire agreement and understanding between the parties as to the subject matter of this agreement, and no statements, conditions, or representations, either oral or written, made by the parties, their employees, or agents, including conditions or provisions appearing in any purchase order or other instrument issued by User, shall be

valid or binding unless contained ~~in a writ~~ten instrument signed by both parties. Ransburg makes no warranties of any kind, express or implied, except as set forth in this agreement.

All the rights and privileges of Ransburg hereunder shall be extended to and inure to the benefit of the successors in business or assigns of Ransburg upon User being given written notice of the assignment of this agreement to such successors in business or assigns and upon the written acceptance by such successors in business or assigns of all Ransburg's obligations hereunder.

This agreement consisting of two pages is submitted in quadruplicate for execution by User. It shall become a contract only upon its execution and acceptance by Ransburg at Ransburg's home office in Indianapolis, Indiana, and shall be effective under the laws of the State of Indiana.

In Witness Whereof, the partie shave caused this agreement to be executed by an authorized officer or person effective as of the date of acceptance by Ransburg set forth below.

Executed and accepted by Ransburg this..... day of....., 195.....

Ransburg Electro-Coating Corp. (Ransburg)

By.....

(Title)

.....(User)

By.....

(Title)

242-2

Serial No. .....

Ransburg.

Electro-Spray Agreement.

This agreement, entered into by and between Ransburg Electro-Coating Corp., an Indiana corporation, having its principal place of business at Indianapolis, Indiana, hereinafter called "Ransburg," and .....

.....

.....,

hereinatfer called "User," Witnesseth:

Whereas, Ransburg is the owner of, or otherwise has the right to grant licenses under, certain United States letters patent and inventions pertaining to and covering methods and apparatus used in electrostatically depositing liquid spray particles formed by airless atomization (without the use of compressed air), the process so used being hereinafter referred to as "said Process," has acquired much engineering data and experience pertaining to said Process, is conducting research in that field, has performed a substantial amount of engineering in adapting said Process to commercial use, and has supplied User with results of said engineering pertinent to User's production; and

Whereas, User desires to use said Process and benefit from Ransburg's engineering;

Now, therefore, it is mutually agreed as follows:

1. License: In consideration of the payment by User of the fees herein provided, Ransburg hereby grants to User, subject to and in accordance with all of the terms and conditions of this agreement and while the same is in effect, a nonexclusive, nonassignable license to use said Process at User's plant in ....., with ..... as shown in Ransburg's

Drawing No. ....., subject to such changes therein and such further specifications as Ransburg may prescribe, for electrostatically spraying .....

.....

.....

2. Supervision: Ransburg or any of its agents or duly authorized representatives shall have access, without notice and at any time during User's regular business hours, to User's premises where said unit or units are installed for the purpose of determining the manner in and extent to which User is using said Process so that, to the extent Ransburg deems it desirable, Ransburg may make engineering and/or operating recommendations.

3. Liability: User agrees that Ransburg shall not be liable to User for any loss, cost, expense, or damage resulting from any failure of said Process to function in any particular manner or to electrostatically coat any particular article or assembly or resulting from the presence, use, operation or condition of the electrostatic unit or units with which said Process is used or resulting from any act or omission of Ransburg's employees or agents while on the premises of User. Also, User agrees to indemnify Ransburg for any loss, cost, expense, or damage Ransburg may sustain because of any claims by third parties resulting from the presence, use, operation or condition of the electrostatic unit or units with which said Process is used or resulting from any act or omission of Ransburg's employees or agent while on the premises of User.

4. Termination: User shall have the right to terminate this agreement at any time upon thirty days' written notice to Ransburg, provided User has fulfilled its obligations hereunder. Ransburg shall have the right to terminate this agreement at any time after three years from the date of Ransburg's acceptance hereof upon six months' written notice to User.

In the event User shall fail to perform any of the conditions or obligations of this agreement, and such failure shall continue or recur after written notice thereof from Ransburg, Ransburg may (without prejudice to its rights to recover any amounts owing by User as herein provided or any damages for breach of this agreement) terminate this agreement forthwith. Any delay, concession, or indulgence on the part of Ransburg in enforcing any of its rights on any default shall not be deemed a waiver of such rights.

5. Fees: User agrees to pay to Ransburg an initial fee of .....

.....

within thirty days after date of acceptance of this agreement by Ransburg. For each calendar month during which this agreement is in effect, User also agrees to pay to Ransburg a monthly fee.

The first period for which a monthly fee is payable shall commence on the date User begins to use said Process under this agreement or thirty days after its acceptance by Ransburg, whichever occurs earlier. With respect to any fractional calendar month for which a monthly fee is payable, the basic minimum monthly fee shall be prorated according to the portion of the month for which it is payable. Within ten days after the end of each calendar month for which a monthly fee is payable, User will furnish to Ransburg upon forms furnished by Ransburg, or, in the absence thereof, upon any reasonably adequate form, a written report setting forth in reasonable detail the information upon which the aforesaid monthly fee may be computed and shall pay to Ransburg at its office at Indianapolis, Indiana, the monthly fee payable for said month. User agrees to keep permanent books of account from which the correctness of said written reports can be verified and agrees that such books of account shall be open to inspection by Ransburg or its duly authorized

representatives at any time during User's regular business hours.

In addition to the above fees, User agrees to pay or to reimburse Ransburg if it should be obliged to pay, directly or indirectly, any taxes, licenses, or fees imposed by the laws of any State, of any political subdivision, of any municipality, or of any other governmental authority by reason of the use or operation of said Process or the license granted under this agreement. Such sums as may be due under this provision shall be paid separately or added to the invoice for other payments as the law may require or as Ransburg may determine.

During the term of this agreement, the basic minimum monthly fee specified above may from time to time be adjusted commensurately with changes, from the value for November, 1950, in the Consumer Price Index, Large Cities Combined, All Items, as determined by the Bureau of Labor Statistics of the U. S. Department of Labor, on the 1947-49 base, or any successor thereto; provided, however, no such adjustment shall be made unless a change of at least ten percentage points has occurred in said Index prior to each such adjustment.

6. Execution of Agreement: This agreement sets forth the entire agreement and understanding between the parties as to the subject matter of this agreement, and no statements, conditions, or representations, either oral or written, made by the parties, their employees, or agents, including conditions or provisions appearing in any purchase order or other instrument issued by User, shall be valid or binding unless contained in a written instrument signed by both parties. Ransburg makes no warranties of any kind, express or implied, except as set forth in this agreement.

All the rights and privileges of Ransburg hereunder shall be extended to and inure to the benefit of the suc-

cessors in business or assigns of Ransburg upon User being given written notice of the assignment of this agreement to such successors in business or assigns and upon the written acceptance by such successors in business or assigns of all Ransburg's obligations hereunder.

This agreement consisting of two pages is submitted in quadruplicate for execution by User. It shall become a contract only upon its execution and acceptance by Ransburg at Ransburg's home office in Indianapolis, Indiana, and shall be effective under the laws of the State of Indiana.

In Witness Whereof, the parties have caused this agreement to be executed by an authorized officer or person effective as of the date of acceptance by Ransburg set forth below.

.....(User)

By.....

(Title)

Executed and accepted by Ransburg this.....
day of ....., 195.....

Ransburg Electro-Coating Corp. (Ransburg)

By.....

(Title)

437-2

DEFENDANT'S EXHIBIT NO. 29.

Ransburg Electro-Coating Corp.
Indianapolis, Indiana.

June 6, 1956

Sales Bulletin No. 171

To: RHS EJS RO DFC EMR
Peabody
EMP DEC MR WWS HJR
Ransburg (Australia)
JEM MFP HEM DCH GR

Subject: New Agreement Form for No. 2 Process

Gentlemen:

Attached is our new agreement form for the No. 2 Process with equipment, which I hope you like for its conciseness, layman readability and arrangement.

The forms for the No. 1 and Detearing Processes, and agreements for a license without equipment are also being re-written, attempting to embody the same salesworthy advantages, and copies will be sent to you when this work is completed.

In the future only the original and one carbon will be issued. The customer will sign both and we will return one copy after our acceptance and execution. (Of course you will receive a copy of each agreement issued to anyone in your territory, as usual.)

Despite the apparent brevity, there is no substantial change in the agreement other than altering the condition that formerly permitted us to collect half of the initial fee if the equipment was not ordered shipped within six months, to the condition (see third paragraph on page 2) which gives us the right to change the fees and terms to

conform to any changes in our general policy if the equipment is not ordered out within one year after signature. We hope that this change will permit us to get agreements signed farther in advance of installation than the old terms sometimes permitted.

Another change is that the Cost of Living Index (paragraph 1 on page 2) is to be based on the January 1956 Consumers' Price Index instead of November 1950.

We hope that you recognize the very serious effort to make the agreement appear palatable and simple and salesworthy, and that you appreciate these changes.

Yours very truly,
Harold,
Harold P. Ransburg.

HPR:ch

No.....

Ransburg

Electro-Spray Agreement.

User .....
Plant: .....Units: .....Drawing No.....
Items: .....

Ransburg Electro-Coating Corp., of Indianapolis, Indiana (herein called Ransburg), which owns patents and inventions for electrostatically depositing airlessly atomized (without compressed air) liquid spray particles, herein called "the Process," has done and is doing extensive engineering and research on the Process, and has designed special equipment therefor; and the above User, which desires to use the Process, engineering and equipment, agree that:

1. License. During the term and subject to the provisions, hereof, Ransburg grants User a non-exclusive li-

cense to use the Process at User's plant, with the number of units, in accordance with Ransburg's drawing made a part hereof (subject to such changes in equipment, procedure, and specifications as Ransburg may from time to time designate) for coating the items, all as set forth above.

2. Equipment and Supervision. At the time requested by User, Ransburg will ship prepaid to the above plant, for use of the Process, high voltage, atomizing, liquid supply and electrical control equipment, and will furnish expert supervision for installing and placing it in operation. If Ransburg's supervisor is required to make more than one trip to User's plant or is there delayed for any reason not chargeable to Ransburg, User will pay Ransburg $75.00 for each day of such extra trip or delay, plus transportation expenses incurred. User shall furnish all other labor, materials and equipment for the installation and use of the Process.

Ransburg will furnish replacements for any defective part of its equipment at the expense of (1) Ransburg, if the part becomes defective through ordinary wear and tear from proper use and if it is returned prepaid within 30 days after becoming defective, or (2) User, at Ransburg's applicable standard replacement charge, if it becomes defective, through improper use or negligence of User, or is not returned within said 30 day period.

Ransburg's obligation to furnish equipment, supervision and replacement parts is subject to availability of the equipment and parts, to prior commitments, fires, strikes, acts of God, governmental decrees or actions, and any other causes beyond Ransburg's control, postponing or preventing performance.

3. Fees. User will pay Ransburg at Indianapolis, Indiana: (1) An initial fee of $..... sixty days after shipment of Ransburg's equipment to User, or 30 days

after its installation, whichever period expires earlier; and (2) For each calendar month during the term hereof, commencing upon completion of installation of the equipment or on the thirtieth day following shipment thereof, whichever occurs earlier, a monthly fee (pro-rated for any partial initial calendar month) equal to

At the request of either party the minimum monthly fee from time to time shall be adjusted commensurate with changes of not less than ten points from the value for January, 1956 of the Consumer Price Index, Large Cities Combined, All items, of the Bureau of Labor Statistics of the U. S. Department of Labor, on the 1947-1949 base, or any successor thereto.

User will keep and make available for Ransburg's inspection during business hours permanent records of all information required for computing monthly fees. Within 10 days following each calendar month User will furnish to Ransburg a written report containing all information for computing the fee for that month, with User's computation and payment of the fee.

If shipment of the equipment is requested by User more than one year after Ransburg's acceptance of this agreement, Ransburg shall have the right to change the fees and terms of this agreement in conformity with its policy at that time.

4. Title and Use of Equipment. All equipment furnished by Ransburg shall remain its personal property and in User's possession until returned to Ransburg as herein provided. User will pay Ransburg for any loss of, or damage to, Ransburg's equipment while in the possession of User or its agents and upon termination of this agreement will at its expense promptly deliver the equipment, freight prepaid, to Ransburg at Indianapolis, Indiana, in as good condition as when received, except only for ordinary wear and tear from proper use.

User will pay, or reimburse Ransburg for, any taxes or fees imposed by any governmental authority by reason of the installation, possession, use, or location of any equipment or services furnished by Ransburg hereunder.

User will use the equipment and the Process in accordance with Ransburg's safety and operating recommendations, and will not make any use thereof except as herein provided. Ransburg shall have the right to enter User's premises during business hours to inspect the condition and use of the equipment.

5. Liability. Ransburg shall not be liable to User for damages resulting from the installation, servicing, presence, use, or condition of Ransburg's equipment at User's plant. User indemnifies Ransburg against all claims of others for any damages resulting from the installation, servicing, presence, use, or condition of Ransburg's equipment at User's plant. Ransburg makes no warranty, express or implied, relative to the Process or equipment.

6. Term. This agreement shall be in effect from the date of acceptance by Ransburg until terminated as follows: (1) User may terminate as of the end of any calendar month or as of the date of return of Ransburg's equipment, whichever is later, upon 30 days' written notice to Ransburg; (2) Ransburg may terminate as of any date after three years from the acceptance date hereof, upon six months' written notice to User; or (3) Ransburg may terminate forthwith should User become insolvent or bankrupt or should any breach or default by User remain uncured for 20 days after written notice thereof from Ransburg, and in any such case Ransburg may enter User's premises and repossess its equipment without it or its authorized representatives incurring any liability for trespass or other causes and without prejudice to its rights to recover amounts owing it hereunder or damages for breach of this agreement.

This written agreement constitutes the entire agreement between the parties, and no terms or understandings not herein contained (whether included in any purchase order or otherwise) shall be valid or binding unless contained in a writing signed by both parties. This agreement shall be governed by the law of Indiana.

Signed by User on ..... 195.....

.....(User)

By .....

(Title)

Accepted by Ransburg on ....., 195.....

Ransburg Electro-Coating Corp.,

By .....

(Title)

DEFENDANT'S EXHIBIT NO. 30.

Serial No. 5409

Ransburg Electrostatic Spray Process Agreement.

This agreement, entered into by and between Ransburg Electro-Coating Corp., an Indiana corporation, having its principal place of business at Indianapolis, Indiana, hereinafter called "Ransburg," and Millgren Manufacturing Company, Huntington Park, California, hereinafter called "User," Witnesseth:

Whereas, Ransburg is the owner of, or otherwise has the right to grant licenses under, certain United States letters patent and inventions all pertaining to and covering methods and apparatus used in the electrostatic coating of articles, the process so used being referred to as "said Process," has acquired much engineering data and experience pertaining to said Process, is conducting research in that

field, has performed a substantial amount of engineering in adapting said Process to commercial use, and has supplied User with the results of said engineering pertinent to User's production; and

Whereas, User desires to use said Process and benefit from Ransburg's engineering;

Now, therefore, it is mutually agreed as follows:

1. License: In consideration of the payment by User of the fees herein provided, Ransburg hereby grants to User, subject to and in accordance with all of the terms and conditions of this agreement and while the same is in effect, a nonexclusive, nonassignable license to use said Process at User's plant in Buena Park, California, with one unit as now installed at Buena Park, subject to such changes therein and such further specifications as Ransburg may prescribe, for electrostatically spraying Door Knobs and Builders' Hardware, but said license shall not include the use of said Process in the manufacture of abrasive articles, flock-coated articles, or articles coated with fiber-shaped particles.

2. Supervision: Ransburg or any of its agents or duly authorized representatives shall, without notice and at any time during User's regular business hours, have access to User's premises where said unit is installed for the purpose of determining the manner in and extent to which User is using said Process so that, to the extent Ransburg deems it desirable, Ransburg may make engineering and/or operating recommendations.

3. Conversion: Upon written request of User and upon terms to be agreeable to both parties, Ransburg will license the use of said Process otherwise than as described in Paragraph 1 unless, in Ransburg's opinion, the requested use involves unsafe practices or impractical conditions or is in conflict with the policies or commitments of Ransburg.

Such conversion shall be made only after Ransburg has agreed thereto in writing.

4. Liability: User agrees that Ransburg shall not be liable to User for any loss, cost, expense, or damage arising from any failure of said Process to function in any particular manner or to electrostatically coat any particular article or assembly, or for any claim resulting from the use, operation, or condition of the electrostatic unit with which said Process is used. User further agrees to reimburse Ransburg for any loss, cost, expense, or damage which may be sustained as a result of any liability to third parties for any claim resulting from the use, operation, or condition of the electrostatic unit with which said Process is used.

5. Performance: The performance of the obligations of both parties hereunder is subject to strikes and lockouts, whether in the organization of either party or elsewhere, and to accidents, fires, delays in manufacture or transportation, acts of God, embargoes, or any governmental action, as well as any causes for postponement or non-performance over which the parties have no control; and any failure, due to any of such causes, of either party to perform any of its obligations herein set forth shall not be considered a violation of this agreement.

6. Termination: User shall have the right to terminate this agreement at any time upon thirty days' written notice to Ransburg, provided User has fulfilled its obligations hereunder. Ransburg shall have the right to terminate this agreement at any time after three years from the date of Ransburg's acceptance hereof upon six months' written notice to User.

In the event User shall fail to perform any of the conditions or obligations of this agreement, and such failure shall continue or recur after written notice thereof from Ransburg, Ransburg may (without prejudice to its rights

to recover any amounts owing by User as herein provided or any damages for breach of this agreement) terminate this agreement forthwith. Any delay, concession, or indulgence on the part of Ransburg in enforcing any of its rights on any default shall not be deemed a waiver of such rights.

6. Fees: User agrees to pay to Ransburg an initial fee paid per settlement within thirty days after the date of acceptance of this agreement by Ransburg. User further agrees to pay Ransburg, on or before the tenth day of each calendar month during the life of this agreement, a basic minimum monthly fee of Eighty Dollars ($80.00), which fee is due in any event, and in addition thereto a monthly fee based on the cost to User of the coating material (including all its ingredients) used in said unit during the preceding calendar month in accordance with the following schedule:

Monthly Cost of Coating Material	Monthly Fee
Less than $4,000.00	10% of Cost
$4,000.00 to $8,000.00	$400.00 plus 5% of Cost over $4,000.00
In Excess of $8,000.00	$600.00

Monthly fees under this agreement shall start on the date User begins to use said Process under this agreement or thirty days after the date of acceptance of this agreement by Ransburg, whichever occurs earlier, and the first payment shall be made on or before the tenth day of the calendar month following. For the first and last payments of monthly fees under this agreement, the basic minimum monthly fee shall be prorated according to the portion of the month for which it is payable.

In addition to the above fees, User agrees to pay or to reimburse Ransburg if it should be obliged to pay, directly or indirectly, any taxes, licenses, or fees imposed

by the laws of any State, of any political subdivision, of any municipality, or of any other governmental authority by reason of the use or operation of said Process or the license granted under this agreement. Such sums as may be due under this provision shall be paid separately or added to the invoice for other payments as the law may require or as Ransburg may determine.

During the term of this agreement, the basic minimum monthly fee specified above shall from time to time be adjusted commensurately with changes, from the value for May 15, 1950, in the Revised Consumer Price Index, Large Cities Combined, as determined by the Bureau of Labor Statistics of the U. S. Department of Labor, on the 1947-49 base; provided, however, that only a change of at least ten percentage points in the value of said Index shall require any such adjustment.

User agrees to keep permanent books of account from which the correctness of the monthly payments made under this agreement can be verified and agrees that such books of account shall be open to inspection by Ransburg or its duly authorized representatives at any time during User's regular business hours.

8. Execution of Agreement: This agreement sets forth the entire agreement and understanding between the parties as to the subject matter of this agreement, and no statements, conditions, or representations, either oral or written, made by the parties, their employees, or agents, including conditions or provisions appearing in any purchase order or other instrument issued by User, shall be valid or binding unless contained in a written instrument signed by both parties. Ransburg makes no warranties of any kind, express or implied, except as set forth in this agreement.

All the rights and privileges of Ransburg hereunder shall be extended to and inure to the benefit of the successors in business or assigns of Ransburg upon User being given

written notice of the assignment of this agreement to such successor in business or assigns and upon the written acceptance by such successors in business or assigns of all Ransburg's obligations hereunder.

This agreement is submitted in quadruplicate for execution by User. It shall become a contract only upon its execution and acceptance by Ransburg at Ransburg's home office in Indianapolis, Indiana, and shall be effective under the laws of the State of Indiana.

In Witness Whereof, the parties have caused this agreement to be executed by an authorized officer or person effective as of the date of acceptance by Ransburg set forth below.

Executed and accepted this 13th day of July, 1954.

Hillgren Manufacturing Company (User)
By Carl Hillgren

(Title)

Ransburg Electro-Coating Corp. (Ransburg)
By E. M. Ransburg, *V. P.*

(Title)

Form No. 137.
BC 6-25-54

DEFENDANT'S EXHIBIT NO. 34.

May 27, 1953

Remington Arms Company, Inc.
Lake City Ordnance Plant
Independence, Missouri

Re: Agreements No. 4322, 4744 and 4745

Gentlemen:

We wish to inquire whether you would like to convert the subject electrostatic spray licenses to licenses under which we would furnish you no equipment and under which we would assume no obligation for replacements parts, supervision, or service, or patent infringement indemnification. If you should elect to assume responsibility for these items for yourself and return our equipment, your basic minimum monthly fee of $100 for each unit would be reduced to $80.00 for each unit, and your initial fee under No. 4744 would be reduced from $2,600.00 to $800.00.

If you are interested in such a proposal, upon advice from you we will send our alternate license agreement.

Yours very truly,

Ransburg Electro-Coating Corp.

E. M. Ransburg

EMR/mm

DEFENDANT'S EXHIBIT NO. 35.

May 27, 1953

The Frito Company,
613 East Tenth Street
Dallas, Texas

Gentlemen:

We wish to inquire whether you would like to convert your present electrostatic spray license to one under which we would furnish you no equipment and under which we would assume no obligation for replacement parts, supervision or service, or patent infringement indemnification. If you should elect to assume responsibility for these items for yourself, your initial fee would be reduced from $2600 to $800, and your basic minimum monthly fee of $100 would be reduced to $80.

If you are interested in such a proposal, upon advice from you we will send our alternate license agreement.

Yours very truly,

Ransburg Electro-Coating Corp.

E. M. Ransburg

EMR/gim

DEFENDANT'S EXHIBIT NO. 36.

July 17, 1953

General Electric Company
1285 Boston Avenue
Bridgeport 2, Connecticut

Gentlemen:

We are writing all of our customers to inquire whether they would prefer a license under which we would supply no equipment and assume no obligation for replacement parts, supervision and service. If, for any reason, you should prefer to provide these items for yourself or to procure them from sources other than our company and return our equipment to us, in your particular case your monthly fees would be reduced by $120.00 per month under Agreement No. 4828. Your initial fee would be reduced by $7,920.00 and your monthly fees by $75.00 per month under Agreement No. 5021.

If you are interested in such a proposal, upon advice from you, we will send our alternate license agreement.

Yours very truly,

Ransburg Electro-Coating Corp.

E. M. Ransburg

EMR:aw

DEFENDANT'S EXHIBIT NO. 37.

May 27, 1953

The Weatherhead Company
300 East 131st Street
Cleveland, Ohio

Re: Agreement Nos. 3508, 3586 and 4983.

Gentlemen:

We wish to inquire whether you would like to convert the subject electrostatic painting licenses to licenses under which we would furnish you no equipment and under which we would assume no obligation for replacement parts, supervision or service, or patent infringement indemnification. If you should elect to assume responsibility for these items for your self and return our equipment, your initial fee under agreement 4983 would be reduced from $1800.00 to $400.00, your basic minimum monthly fee under agreement No. 4983 would be reduced from $50.00 to $37.50 and your basic minimum monthly fee under agreements Nos. 3508 and 3086 of $100.00 for each unit would be reduced to $80.00 for each unit.

If you are interested in such a proposal, upon advice from you we will send our alternate license agreement.

Yours very truly,

Ransburg Electro-Coating Corp.
E. M. Ransburg

EMR/rh

DEFENDANT'S EXHIBIT NO. 38.

May 28, 1953

Rheem Mfg. Company
Burlington Ordnance Plant
Burlington, New Jersey

Re: Agreements Nos. 4462, 4463, 4464, 4465, 4466 and 4743.

Gentlemen:

We wish to inquire whether you would like to convert the subject detearing licenses to one under which we would furnish you no equipment and under which we would assume no obligation for replacement parts, supervision or service, or patent infringement indemnification. If you should elect to assume responsibility for these items for yourself and return our equipment, your basic minimum monthly fee of $50.00 for each unit would be reduced to $37.50 for each unit, and your initial fee under Agreement No. 4743 will be reduced from $1800.00 to $400.00.

If you are interested in such a proposal, upon advice from you we will send our alternate license agreement.

Yours very truly,
Ransburg Electro-Coating Corp.
E. M. Ransburg

EMR/mm

DEFENDANT'S EXHIBIT NO. 39.

May 27, 1953

Public Service Electric and Gas Company
80 Park Place
Newark 1, New Jersey

Gentlemen:

We wish to inquire whether you would like to convert your present electrostatic spray license to one under which we will furnish you no equipment and under which we would assume no obligation for replacement parts, supervision or service, or patent infringement indemnification. If you should elect to assume responsibility for these items for yourself, your initial fee would be reduced from $3200 to $1400, and your basic minimum monthly fee of $100 would be reduced to $80.

If you are interested in such a proposal, upon advice from you we will send our alternate license agreement.

Yours very truly,

Ransburg Electro-Coating Corp.

E. M. Ransburg

EMR/gm

DEFENDANT'S EXHIBIT NO. 40.

May 28, 1953

C. A. Olson Mfg. Company
Elyria, Ohio

Gentlemen:

We wish to inquire whether you would like to convert your present electrostatic spray license to one under which we would furnish you no equipment and under which we would assume no obligation for replacement parts, supervision or service, or patent infringement indemnification. If you should elect to assume responsibility of these items for yourself and return our equipment, your initial fee would be reduced from $1500 to $1000 and your basic minimum monthly fee of $200.00 would be reduced to $180.00.

If you are interested in such a proposal, upon advice from you we will send our alternate license agreement.

Yours very truly,

Ransburg Electro-Coating Corp.
E. M. Ransburg

EMR/mm

PLAINTIFF'S EXHIBIT YY.

Ransburg Electro-Coating Corp.
Indianapolis, Indiana

May 27, 1953

To All Distributors

Attached is a new pricing sheet showing a change in initial fees for Detearing and No. 1 Spray Process and a more concise listing of No. 2 Process initial and monthly fees. As you know, it has always been our policy to be willing to grant any customer a license under our patents with or without our equipment (our Bulletin of August 18, 1950). The enclosed price sheet shows the differences in initial fees so that all interested customers can be advised promptly by you of the proper prices and terms of agreements either with equipment and appurtenant items, or a license without equipment and appurtenant items. Attached are four sample agreements, identified as A, B, C, and D.

A is our standard detearing agreement under which the customer obtains from us all the services and facilities we are willing to supply.

B is our standard detearing agreement under which we license our detearing process without furnishing equipment and appurtenant items thereto.

C is our standard No. 1 spray agreement under which the customer obtains from us all the services and facilities we are willing to supply.

D is our standard No. 1 spray agreement under which we license our No. 1 Spray Process without furnishing equipment and appurtenant items thereto.

You will notice that the principal changes in agreements identified as B and D are:

1. All of the paragraphs relating to Ransburg's providing equipment, supervision, and patent infringement indemnification have been eliminated.
2. The Inspection paragraph in the new agreement gives Ransburg the right to inspect User's plant to determine the manner in and extent to which User is using the Detearing Process, whereas in the old agreement the Title paragraph provides that Ransburg shall have the right to enter User's plant to determine the manner in which its equipment and process are being used.
3. The Fee paragraph has been changed by modifying the initial fee and the basic minimum monthly fee to take into account the fact that Ransburg is not furnishing any equpiment and appurtenant items.

We are sending these to each of you with the request that each prospective customer be advised that either agreement form is available and the attached price sheet will give you the price differentials for the respective agreements.

In the event any of our present detearing or No. 1 spray licensees are unfamiliar with the fact that they can as readily obtain a license from us without equipment and appurtenant items, they will now be advised by an appropriate letter from us, as per the enclosed letters E, F, G, and H.

Yours very truly,

E. M. Ransburg

EMR:eh

PLAINTIFF'S EXHIBIT ZZ-10.

Ransburg Electro-Spray Agreement Serial No. 6087.

This agreement, entered into by and between Ransburg Electro-Coating Corp., an Indiana corporation, having its principal place of business at Indianapolis, Indiana, hereinafter called "Ransburg," and General Electric Company, Louisville, Kentucky, hereinafter called "User," Witnesseth:

Whereas, Ransburg is the owner of, or otherwise has the right to grant licenses under, certain United States letters patent and inventions pertaining to and covering methods and apparatus used in electrostatically depositing liquid spray particles, the process so used being hereinafter referred as as "said Process," has acquired much engineering data and experience pertaining to said Process, is conducting research in that field, has performed a substantial amount of engineering in adapting said Process to commercial use, has supplied User with some of the results of said engineering pertinent to User's experimental use and has designed special equipment therefor; and

Whereas, in consideration of several other licenses to User under which Ransburg is receiving additional fees, Ransburg desires to grant User a license to use said engineering and said Process experimentally during the term of this agreement; and

Whereas, User desires to use said Process and benefit from Ransburg's engineering and requests that Ransburg furnish certain special equipment hereinbelow described; Now, therefore, it is mutually agreed as follows:

1. License: In consideration of the payment by User of the fees herein provided, Ransburg hereby grants to User, subject to and in accordance with all of the terms

and conditions of this agreement and while the same is in effect, a nonexclusive, nonassignable license to use said Process at User's plant in Louisville, Kentucky, with one unit as shown in Ransburg's Drawing No. 231537 subject to such changes therein and such further specifications as Ransburg may prescribe, for testing and matching paints. It is specifically understood that the license under this agreement does not give User the right to use said unit for coating articles for commercial use or for testing the coating of articles for third parties.

2. Equipment and Supervision: Ransburg will furnish User, for its use of said Process, high voltage apparatus, disc type atomizing equipment, liquid supply apparatus for such atomizer, electrical controls for such equipment, and such other equipment as Ransburg deems desirable, which will be shipped prepaid to User's aforesaid plant upon request of User. As parts of Ransburg's equipment become defective, User agrees to return prepaid to Ransburg promptly all such defective parts. Ransburg will furnish User, at Ransburg's prevailing standard charges, replacements of any equipment furnished by Ransburg under this paragraph that becomes defective.

Ransburg will furnish supervision necessary for placing the equipment in readiness for operation. Should Ransburg's supervisor make more than one trip to the plant of User or be delayed there for any cause not chargeable to Ransburg, then for each day of such trip or trips or of such delay, User shall pay Ransburg the sum of Seventy-five Dollars and any necessary transportation expenses incurred thereby.

User shall furnish all labor, materials, and equipment necessary for the use of said Process except the equipment and supervision to be furnished by Ransburg in accordance with this paragraph.

The furnishing of equipment, replacements, and super-

vision by Ransburg is subject to the availability to Ransburg of the necessary component parts of the equipment and replacements, to prior shipment commitments of Ransburg, to strikes and lockouts, whether in the organization of Ransburg or elsewhere, and to accidents, fires, delays in manufacture or transportation, acts of God, court injunctions, or any governmental action, as well as any causes for postponement or non-performance over which Ransburg has no control; and any failure, due to any of such causes, of Ransburg to perform any of its obligations herein set forth shall not be considered a breach of this agreement.

3. Title and Use of Equipment: Title to all equipment furnished by Ransburg including replacements shall at all times remain in Ransburg, and said equipment shall remain personal property regardless of how it is affixed to the realty. Ransburg shall have at all times, during business hours, the right to enter User's premises for the purpose of determining whether its equipment and said Process are being used as herein provided. User shall not have the right, without the written consent of Ransburg, to (1) lease or grant the right to use the equipment furnished by Ransburg to any person, firm, or corporation, (2) remove it from the plant to which it is delivered for installation, or (3) use it for any purpose or in any manner other than as herein provided.

User agrees that it shall not use or operate Ransburg's equipment with any of the parts or safety devices removed, that it shall follow Ransburg's safety and operating recommendations, and that it shall maintain Ransburg's equipment in as good condition as when installed, ordinary wear and tear from proper use and operation alone excepted.

4. Liability: User agrees that Ransburg shall not be liable to User for any loss, cost, expense, or damage resulting from any failure of said process or equipment to func-

tion in any particular manner or to electrostatically coat any particular article or assembly or resulting from the installing, servicing, adjusting, presence, use, operation or condition of Ransburg's equipment or resulting from any act or omission of Ransburg's employees or agents while on the premises of User. Also, User agrees to indemnify Ransburg for any loss, cost, expense, or damage Ransburg may sustain because of any claims by third parties resulting from the installing, servicing, adjusting, presence, use, operation or condition of Ransburg's equipment or resulting from any act or omission of Ransburg's employees or agents while on the premises of User. User shall be liable to Ransburg for any loss of, or damage to, Ransburg's equipment occurring at any time that such equipment is in the possession of User or any of its agents, ordinary wear and tear from proper use and operation alone excepted.

5. Termination: Either party to this agreement shall have the right to terminate this agreement at any time upon giving the other party 30 days' written notice.

After User returns Ransburg's equipment upon termination of this agreement, Ransburg will refund to User the balance of the initial fee paid by User after deducting the following: (a) any expenses incurred by Ransburg as a result of the return of its equipment, (b) the initial cost of that portion of Ransburg's returned equipment which Ransburg considers obsolete or defective, (c) the cost to Ransburg for initial installation and supervision of User's electrostatic unit under this agreement, and (d) the cost to Ransburg for reconditioning the portion of its returned equipment that is not obsolete.

In the event User shall fail to perform any of the conditions or obligations of this agreement, and such failure shall continue or recur after written notice thereof from Ransburg, Ransburg may (without prejudice to its rights to recover any amounts owing by User as herein provided

or any damages for breach of this agreement) terminate this agreement and take possession of its equipment forthwith, and for that purpose permission is hereby given Ransburg or any of its agents to enter any premises wherein its equipment is located to discover and take possession of its equipment without notice and without being liable to any suit, action, indictment, or other proceedings by User or anyone claiming under it. Any delay, concession, or indulgence on the part of Ransburg in enforcing any of its rights on any default shall not be deemed a waiver of such rights.

After notice of termination of this agreement, User agrees to deliver the equipment furnished by Ransburg, to Ransburg at Indianapolis, Indiana, freight prepaid, in as good condition as when installed, ordinary wear and tear incident to its proper use and operation alone excepted.

6. Fees: User agrees to pay to Ransburg an initial fee of Three Thousand Five Hundred Dollars ($3,500.00) within sixty days after date of shipment of Ransburg's equipment or thirty days after date of installation thereof, whichever occurs earlier.

In addition to the above fees, User agrees to pay, or to reimburse Ransburg if it should be obligated to pay, directly or indirectly, any taxes, licenses, or fees imposed by the laws of any State, of any political subdivision, of any municipality, or of any other governmental authority by reason of the installation, possession, use or location of any equipment furnished by Ransburg or by reason of the furnishing of any services by Ransburg pursuant to this agreement. Such sums as may be due under this provision shall be paid separately or added to the invoice for other payments as the law may require or as Ransburg may determine.

If User does not request shipment of Ransburg's equipment prior to the expiration of six months after the date of

Ransburg's acceptance of this agreement, Ransburg shall have the right, prior to shipment of its equipment, to change the fees and conditions of this agreement to conform to its policy as of the date of such shipment.

During the term of this agreement, the sum set forth in Paragraph 2 may from time to time be adjusted commensurately with changes, from the value for November, 1950, in the Consumer Price Index, Large Cities Combined, All Items, as determined by the Bureau of Labor Statistics of the U. S. Department of Labor, on the 1947-49 base, or any successor thereto; provided, however, no such adjustment shall be made unless a change of at least ten percentage points has occurred in said Index prior to each adjustment.

7. Performance By User: The prompt return of Ransburg's equipment under Paragraph 5 hereunder by User is subject to strikes and lockouts, whether in the organization of User or elsewhere, and to accidents, fires, delays in transportation, acts of God, embargoes or any governmental action as well as any causes for postponement or non-performance over which User has no control; and any failure due to any such causes of User to promptly return Ransburg's equipment shall not be considered a violation of this agreement, provided, if for causes under this paragraph, it becomes impossible for User to return Ransburg's equipment or the return of Ransburg's equipment is delayed more than one year from the date of termination of this agreement, User shall reimburse Ransburg promptly for its equipment in an amount determined by Ransburg but not in excess of the initial fee set forth in Paragraph 6, and provided further that if for causes under this paragraph said equipment is destroyed prior to the termination of this agreement, User may elect to have Ransburg replace said equipment hereunder by payment to Ransburg of an amount determined by Ransburg but not in excess of

the initial fee set forth in Paragraph 6, adjusted commensurately with changes, from the value for November, 1950, in the Consumer Price Index, Large Cities Combined, All Items, as determined by the Bureau of Labor Statistics of the U. S. Department of Labor, on the 1947-49 base, or any successor thereto; provided, however, no such adjustment shall be made unless a change of at least ten percentage points has occurred in said Index prior to such adjustment, and upon such election User's obligations to return the original equipment or to reimburse Ransburg therefor shall cease.

8. Execution of Agreement: This agreement sets forth the entire agreement and understanding between the parties as to the subject matter of this agreement, and no statements, conditions, or representations, either oral or written, made by the parties, their employees, or agents, including conditions or provisions appearing in any purchase order or other instrument issued by User, shall be valid or binding unless contained in a written instrument signed by both parties. Ransburg makes no warranties of any kind, express or implied, except as set forth in this agreement.

All the rights and privileges of Ransburg hereunder shall be extended to and inure to the benefit of the successors in business or assigns of Ransburg upon User being given written notice of the assignment of this agreement to such successors in business or assigns and upon the written acceptance by such successors in business or assign of all Ransburg's obligations hereunder.

This agreement consisting of five pages is submitted in quadruplicate for execution by User. It shall become a contract only upon its execution and acceptance by Ransburg at Ransburg's home office in Indianapolis, Indiana; and shall be effective under the laws of the State of Indiana.

In Witness Whereof, the parties have caused this agreement to be executed by an authorized officer or person effective as of the date of acceptance by Ransburg set forth below.

Executed and accepted by Ransburg this 12th day of March, 1956.

Ransburg Electro-Coating Corp.
(Ransburg)
By Harold Ransburg V.P.

(Seal)

General Electric Company
(User)
By H. B. Miller
H. L. Dept.—Gen. Mgr.
(Title)

eh/2-2-56

PLAINTIFF'S EXHIBIT ZZ-12.

Ransburg Electro-Spray Agreement Serial No. 6366.

This agreement, entered into by and between Ransburg Electro-Coating Corp., an Indiana corporation, having its principal place of business at Indianapolis, Indiana, hereinafter called "Ransburg," and Pemco Corporation, Research Division, Baltimore, Maryland, hereinafter called "User," Witnesseth:

Whereas, Ransburg is the owner of, or otherwise has the right to grant licenses under, certain United States letters patent and inventions pertaining to and covering methods and apparatus used in electrostatically depositing liquid spray particles, the process so used being hereinafter referred to as "said Process," has acquired much engineering data and experience pertaining to said Process, is con-

ducting research in that field, has performed a substantial amount of engineering in adapting said Process to commercial use, has supplied User with some of the results of said engineering pertinent to User's experimental use and has designed special equipment therefor; and

Whereas, User desires to use said Process and benefit from Ransburg's engineering and requests that Ransburg furnish certain special equipment hereinbelow described;

Now, therefore, it is mutually agreed as follows:

1. License: Ransburg hereby grants to User, subject to and in accordance with all of the terms and conditions of this agreement and while the same is in effect, a non-exclusive, nonassignable license to use said Process at User's plant in Baltimore, Maryland, with one unit as shown in Ransburg's Drawing No. 231750, subject to such changes therein and such further specifications as Ransburg may prescribe, for testing and matching liquids. It is specifically understood that the license under this agreement does not give User the right to use said unit for testing the coating of articles for third parties or demonstrating the coating of articles to third parties without Ransburg's consent in writing.

2. Equipment and Supervision: Ransburg will furnish User, for its use of said Process, high voltage apparatus, disk atomizing apparatus, liquid supply apparatus for such atomizing apparatus, and electrical controls, and such other equipment as Ransburg deems desirable, which will be shipped prepaid to User's aforesaid plant upon request of User. As parts of Ransburg's equipment become defective, User agrees to return prepaid to Ransburg promptly all such defective parts. Ransburg will furnish User, at Ransburg's prevailing standard charges, replacements of any equipment furnished by Ransburg under this paragraph that becomes defective.

Ransburg will furnish supervision necessary for placing

its equipment in readiness for operation. Should Ransburg's supervisor make more than one trip to the plant of User or be delayed there for any cause not chargeable to Ransburg, then for each day of such trip or trips or of such delay, User shall pay Ransburg the sum of Seventy-five Dollars and any necessary transportation expenses incurred thereby.

User shall furnish all labor, materials, and equipment necessary for the use of said Process except the equipment and supervision to be furnished by Ransburg in accordance with this paragraph.

The furnishing of equipment, replacements, and supervision by Ransburg is subject to the availability to Ransburg of the necessary component parts of the equipment and replacements, to prior shipment commitments of Ransburg, to strikes and lockouts, whether in the organization of Ransburg or elsewhere, and to accidents, fires, delays in manufacture or transportation, acts of God, court injunctions, or any governmental action, as well as any causes for postponement or non-performance over which Ransburg has no control; and any failure, due to any of such causes, of Ransburg to perform any of its obligations herein set forth shall not be considered a breach of this agreement.

3. Title and Use of Equipment: Title to all equipment furnished by Ransburg including replacements shall at all times remain in Ransburg, and said equipment shall remain personal property regardless of how it is affixed to the realty. Ransburg shall have at all times, during business hours, the right to enter User's premises for the purpose of determining whether its equipment and said Process are being used as herein provided. User shall not have the right, without the written consent of Ransburg, to (1) lease or grant the right to use the equipment furnished by Ransburg to any person, firm, or corporation, (2) remove it from the plant to which it is delivered for installation, or

(3) use it for any purpose or in any manner other than as herein provided.

User agrees that it shall not use or operate Ransburg's equipment with any of the parts or safety devices removed, that it shall follow Ransburg's safety and operating recommendations, and that it shall maintain Ransburg's equipment in as good condition as when installed, ordinary wear and tear from proper use and operation alone excepted.

4. Liability: User agrees that Ransburg shall not be liable to User for any loss, cost, expense, or damage resulting from any failure of said process or equipment to function in any particular manner or to electrostatically coat any particular article or assembly or resulting from the installation, servicing adjusting, presence, use, operation or condition of Ransburg's equipment. Also, User agrees to indemnify Ransburg for any loss, cost, expense, or damage Ransburg may sustain because of any claims by third parties resulting from the installing, servicing, adjusting, presence, use, operation or condition of Ransburg's equipment. User shall be liable to Ransburg for any loss of or damage to, Ransburg's equipment occurring at any time that such equipment is in the possession of User or any of its agents, ordinary wear and tear from proper use and operation alone excepted.

5. Termination: Either party to this agreement shall have the right to terminate this agreement at any time upon giving the other party thirty days' written notice.

After User returns Ransburg's equipment upon termination of this agreement, Ransburg will refund to User the balance of the initial fee paid by User after deducting the following: (a) any expenses incurred by Ransburg as a result of the return of its equipment, (b) the initial cost of that portion of Ransburg's returned equipment which Ransburg considers obsolete or defective, (c) the cost to Ransburg for initial installation and supervision of User's elec-

trostatic unit under this agreement, and (d) the cost to Ransburg for reconditioning the portion of its returned equipment that is not obsolete.

In the event User shall fail to perform any of the conditions or obligations of this agreement, and such failure shall continue or recur after written notice thereof from Ransburg, Ransburg may (without prejudice to its rights to recover any amounts owing by User as herein provided or any damages for breach of this agreement) terminate this agreement and take possession of its equipment forthwith, and for that purpose permission is hereby given Ransburg or any of its agents to enter any premises wherein its equipment is located to discover and take possession of its equipment without notice and without being liable to any suit, action, indictment, or other proceedings by User or anyone claiming under it. Any delay concession or indulgence on the part of Ransburg in enforcing any of its rights on any default shall not be deemed a waiver of such rights.

After notice of termination of this agreement, User agrees to deliver the equipment furnished by Ransburg, to Ransburg at Indianapolis, Indiana, freight prepaid, in as good condition as when installed, ordinary wear and tear incident to its proper use and operation alone excepted.

6. Fees: User agrees to pay to Ransburg an initial fee of Four Thousand Five Hundred Dollars ($4,500.00) within sixty days after date of shipment of Ransburg's equipment or thirty days after date of installation thereof, whichever occurs earlier. In the event User has not requested shipment of Ransburg's equipment prior to the termination of this agreement, or within six months of the date of Ransburg's acceptance of this agreement, whichever is earlier, one-half of the initial fee shall become due and payable forthwith, and the balance of its shall be due and payable as provided hereinabove.

In addition to the above fee, User, agrees to pay, or to

reimburse Ransburg if it should be obliged to pay, directly or indirectly, any taxes, licenses, or fees imposed by the laws of any State, of any political subdivision, of any municipality, or of any other governmental authority by reason of the installation, posession, use, or location of any equipment furnished by Ransburg or by reason of the furnishing of any services by Ransburg pursuant to this agreement. Such sums as may be due under this provision shall be paid separately or added to the invoice for other payments as the law may require or as Ransburg may determine.

If User does not request shipment of Ransburg's equipment prior to the experiation of six months after the date of Ransburg's acceptance of this agreement, Ransburg shall have the right, prior to shipment of its equipment, to change the fees and conditions of this agreement to conform to its policy as of the date of such shipment.

During the term of this agreement, the sum set forth in Paragraph 2 may from time to time be adjusted commensurately with changes, from the value for November, 1950, in the Consumer Price Index, Large Cities Combined, All Items, as determined by the Bureau of Labor Statistics of the U. S. Department of Labor, on the 1947-49 base, or any successor thereto; provided, however, no such adjustment shall be made unless a change of at least ten percentage points has occurred in said index prior to each such adjustment.

7. Future Inventions: User agrees that in the event User acquires, from any source, any inventions, improvements, or any rights under letters patent, domestic or foreign, pertaining to methods and/or apparatus for electrostatically depositing liquid spray particles formed by airless atomization (without the use of compressed air), Ransburg shall have with respect to coating methods and apparatus employing said inventions, improvements, and

the subject matter of said letters patent, a royalty-free, nonexclusive, assignable license, with right to sub-license, such license to be irrevocable except upon voluntary surrender by Ransburg. Patents subject to Ransburg's rights under this paragraph shall include only patents under which User has acquired rights during the term of this agreement, patents under which User has acquired rights within two years following terminations of this agreement, and patents regardless of when User acquired rights thereunder which cover inventions and improvements made within the term of this agreement or within two years following its termination.

8. Execution of Agreement: This agreement sets forth the entire agreement and understanding between the parties as to the subject matter of this agreement, and no statements, conditions, or representations, either oral or written, made by the parties, their employees, or agents, including conditions or provisions appearing in any purchase order or other instrument issued by User, shall be valid or binding unless contained in a written instrument signed by both parties. Ransburg makes no warranties of any kind, express or implied, except as set forth in this agreement.

All the rights and privileges of Ransburg hereunder shall be extended to and inure to the benefit of the successors in business or assigns of Ransburg upon User being given written notice of the assignment of this agreement to such successors in business or assigns and upon the written acceptance by such successors in business or assigns of all Ransburg's obligations hereunder.

This agreement consisting of four pages is submitted in duplicate for execution by User. It shall become a contract only upon its execution and acceptance by Ransburg at Ransburg's home office in Indianapolis, Indiana, and shall be effective under the laws of the State of Indiana.

In Witness Whereof, the parties have caused this agreement to be executed by an authorized officer or person effective as of the date of acceptance by Ransburg set forth below.

Executed and accepted by Ransburg this 21st day of August, 1956.

Ransburg Electro-Coating Corp. (Ransburg)
(Seal) By Gregg S. Ransburg,
Vice-President.

Pemco Corporation, (User)
Research Division,
By (Illegible)
(Title).

ab/7-11-56

PLAINTIFF'S EXHIBIT PPPP.

November 30, 1940

Behr-Manning Corporation
Troy, New York

Attention—E. C. Schacht

Gentlemen:

We have your letter of November 22, and apologize for our delay in acknowledging it, which is due to some of our people being out of the city. We appreciate the information you convey to us, and your interest in our development work, as well as the spirit in which you bring to our attention the fact that you have been interested along similar lines. We are sure that it would be a pleasure for us to arrange to meet with you at some time and place convenient, to discuss any matters of mutual interest.

In the meantime, we note your reference to patents cov-

ering many of your operations, and in checking over our volume of patents we find one of your patents relating to abrasive processing. It would be interesting to us if you could give us a list of your patents pertaining to electrostatic processing, in order that we may better identify your work along this line so far as shown in issued patents.

We would be very pleased to meet with you at Troy, and would be glad to hear from you as to when it would be quite convenient.

Yours very truly,
Harper J. Ransburg Company
By.....

HPR:Ey

(Letterhead of Behr-Manning Corporation,
Troy, New York.)

May 16, 1941.

Mr. Harper J. Ransburg,
Harper Ransburg Company,
Indianapolis, Indiana.

Dear Mr. Ransburg:

As I informed you recently on the telephone, we asked the Minnesota Mining & Manufacturing Company if they would be willing to grant access to their pending electrostatic patent applications in accordance with our program to examine the pending electrostatic patent applications owned by the Ransburg and Behr-Manning companies or those to which either company will subsequently acquire ownership. We have had no reply to date but on Tuesday of the present week Mr. Gallagher saw Mr. W. J. McKnight, President of Minnesota Company in Chicago and was advised that we would have their answer

within a short time. Mr. McKnight was not too enthusiastic over the prospect of opening up the pending applications but promised to give the matter very careful consideration.

We will notify you immediately upon receipt of the Minnesota Company reply.

Yours very truly,
Behr-Manning Corporation.
Elmer C. Schacht,
Vice President.

E. C. Schacht
BS

August 9, 1944

Mr. Harold P. Ransburg
Harper J. Ransburg Company
Indianapolis 7, Indiana

Dear Mr. Ransburg:

In accordance with our recent conversation in Chicago, I am enclosing a list of all United States patents which have been issued to Behr-Manning or which Behr-Manning owns and controls. In addition to this list of patents, there are, of course, a large number of applications on electrostatic inventions still pending. We also have corresponding foreign patents in several of the principal foreign countries.

It is my understanding that you will submit a similar list of United States electrostatic patents which are owned or controlled by your company at your earliest convenience.

I greatly enjoyed my visit with you, your father and Dr. Miller and feel that it will be to the mutual advantage of both our companies to continue our discussion on the subject of the Chicago meeting. Since I did not return to

Troy until yesterday, there has been no opportunity to discuss the matter of our present and future relationship in the electrostatic development with the several people in our organization who are interested in the matter but I will do so within a day or two.

As I informed you in Chicago, I will see Mr. Guyer in New York on Thursday. Shortly after this interview, it probably will be in order for us to hold another conference and you may expect to hear from me probably by telephone at the end of the present week or early next week. In the meantime, I hope that you will pass on any thoughts or conclusions which you have developed since our meeting.

Yours very truly,

Behr-Manning Corporation

.....

Vice President.

E. C. Schacht
BS
Enc.

Electrostatic and Electromagnetic patents owned and controlled by Behr-Manning Corp.

Re. 20,660
Re. 22,419
1,854,071
2,027,087
2,027,308
2,027,309
2,047,525
2,038,182
2,087,260
2,097,233
2,152,077
2,186,385
2,173,032
2,173,078
2,174,328
2,217,136
2,218,445
2,221,336
2,222,539
2,223,476
2,231,334
2,245,301
2,248,064
2,248,853
2,279,341
2,281,588
2,297,837
2,318,870
2,318,871
2,323,877

September 27, 1944

Mr. Harper J. Ransburg
Harper J. Ransburg Company
Indianapolis 7, Indiana

Dear Mr. Ransburg:

In the proposed cross licensing agreement enclosed in an accompanying letter, you will note in paragraphs 3 and 4 that Ransburg and Behr-Manning have reserved unto themselves the right to bring infringement actions under and defend the validity of their own patents. If this provision is acceptable to you, it will solve our problem with DeVilbiss because we can separately guarantee DeVilbiss immunity from suit for infringement of Smyser which is all that they had previously negotiated for in their request for a non-exclusive license.

As soon as you have indicated that the proposed cross licensing agreement is satisfactory, we will communicate with DeVilbiss and arrange to give them written assurance in regard to Smyser. We will also want to inform the General Electric Company of our contract with you and the settlement with DeVilbiss because we are anxious to continue to cooperate with the General Electric Company in several fields.

Yours very truly,
Behr-Manning Corporation

.....
Vice President.

E. C. Schacht
BR

September 27, 1944

Mr. Harper J. Ransburg
Harper J. Ransburg Company
Indianapolis 7, Indiana

Dear Mr. Ransburg:

Enclosed you will find a copy of the draft of the proposed agreement between the Harper J. Ransburg Company and Behr-Manning relating to the cross licensing of electrocoating patents owned by the respective parties. This agreement was drawn by our attorney, Mr. George Link, Jr., of New York, following an outline prepared by Mr. Gallagher after our meeting in Buffalo.

While we believe that the enclosed contract covers all of the necessary features of our agreement, I would like to call your attention to two items of possible future interest, namely, (1) whereas in paragraphs 3 and 4 Ransburg and Behr-Manning reserve to each other the sole right to prosecute actions for infringements and defend actions involving the validity of their own patents, it is, of course, understood that Ransburg or Behr-Manning could bring or defend actions relating to infringement or validity of patents belonging to the other providing permission was secured from the latter; and (2) Exhibits A and B have not been annexed for the reason that our counsel deemed it advisable not to include in the agreement the grant of rights to inspect patent applications belonging to both parties. This will be done in a separate letter after we have come to final agreement as to the contents of the cross licensing document and will be arranged for by transmitting Exhibits A and B with a separate letter covering the specific applications to which each party is to have access.

We would like to make plans to visit you in Indianapolis and tentatively I would like to suggest the 10th and 11th

of October. There probably will be three in our party and while we may not be able to find enough work to keep us busy for two days, it was felt best to allow this amount of time in view of the fact that we may want to carefully review the pending patent applications.

Will you kindly notify me if the 10th and 11th of October are satisfactory and if so, will you also please make hotel reservations for the night of the 10th since we will be arriving on the morning of that day. We will bring copies of all pending applications and will also be prepared to consummate the cross licensing agreement if it is in condition for signature by that time.

Yours very truly,
Behr-Manning Corporation

.....

Vice President.

E. C. Schacht
BR

(Form of Western Union Telegram.)

October 5, 1944

Mr. Elmer C. Schacht
Behr-Manning Corp.
Troy, New York

Acknowledging your letter of 27th answer to which has been delayed due to illness of our attorney your proposed agreement is not acceptable as drawn and feel it does not cover our understanding in Buffalo. Believe this can best be clarified in forthcoming conference. Unfortunately our schedule does not permit meeting 10th and 11th. Suggest 14th and 15th.

Harper J. Ransburg Co.

HPR:rm
3:45 P.M.
Night Letter

PLAINTIFF'S EXHIBIT NO. QQQQ.

March 12, 1948.

Mr. E. M. Ransburg
Ransburg Electro-Coating Company
1234 Barth Avenue
Indianapolis, Indiana

Dear Mr. Ransburg:

A short while ago your patent counsel Mr. Trask, in company with Mr. L. P. Schact of Behr-Manning, discussed with me the possibility of a license to the Ransburg Electro-Coating Company under U. S. Patents Nos. 2,221,338 and 2,097,233.

The general proposal made by Mr. Trask was that the license should be exclusive for the field of deposition of liquid coating materials, and that the royalties should be a lump sum amount to be suggested initially by us. After due consideration, we have concluded that we would prefer not to enter into such an agreement, and that any license agreement should be based rather on a percentage of sale royalty for such equipment sold by you as may make use of the claims of the patents involved.

It is our opinion that the claims of the patents have specific bearing on your products rather than being of merely general interest, which was the point of view expressed by Mr. Trask. In view of this, we believe that the royalty provision of any proppsed license would be more appropriately placed on a continuing basis than a paid-up amount.

We would be very pleased to discuss this further with you at your convenience, and feel sure that some mutually satisfactory agreement can be reached.

Yours very truly,

JWH:b J. W. Hinkley.

PLAINTIFF'S EXHIBIT NO. SSSS.

Western Electric Company
195 Broadway
New York

April 25, 1941.

Lockwood, Goldsmith & Galt,
Fletcher Trust Building,
Indianapolis, Indiana.

Re: Pugh Patent No. 1,855,869

Attention Ralph G. Lockwood, Esq.

Gentlemen:

As indicated in Mr. Orr's letter of April 22, 1941, your inquiry of April 15 with reference to the above mentioned patent has been referred to this office. We find that this patent has not been, and is not now being used in connection with our manufacturing operations.

We are prepared to discuss the matter with you or your client on the basis of a non-exclusive license to your client or on the basis of assignment of the patient. Negotiation of exclusive licenses is contrary to our established policy.

We shall appreciate hearing from you as to whether a non-exclusive license or assignment of the patent would be of interest to your client.

Yours very truly,
(Sgd.) H. H. Timbers,
Contract License Manager.

RCL:McV

(Letterhead of Lockwood, Goldsmith & Galt,
Indianapolis, Indiana.)

April 28, 1941.

Harper J. Ransburg Company,
1234 Barth Avenue,
Indianapolis, Indiana.

Attention Mr. Harold P. Ransburg.

Dear Harold:

Enclosed is copy of a letter just received from the Western Electric Company which indicates that we will have no trouble in doing business with them if we can get together on a reasonable figure.

We would recommend that we answer the letter by requesting them to name a price for the assignment of the patent and also a price for royalty on an unexclusive license. I believe we should also bring out in the letter the fact that the patent has only a nuisance value.

Best regards.

Sincerely yours,
Lockwood, Goldsmith & Galt,
Thomas B. Huestis.

5/OH
Enc.

WHAT and HOW

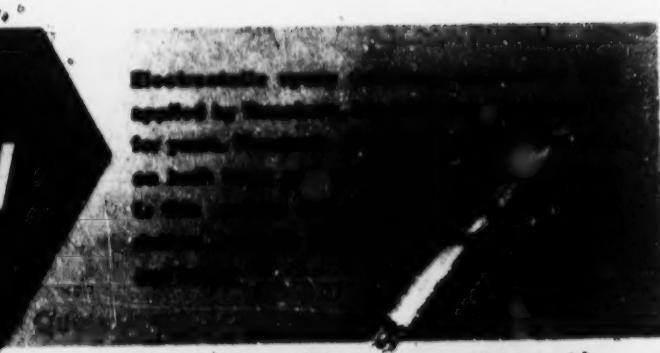

PLAINTIFFS EXHIBIT UUUU

The Ransburg No. 2 Process is the ONLY spray method capable of almost 100% painting efficiency on a wide variety of production jobs.

The basic process is shown in the accompanying diagrams. Articles to be painted are carried by a conveyor into the coating zone. They are grounded electrically by their hangers, and depending upon their shape, may be rotated.

A voltage pack is connected to a paint sprayer, creating an electrostatic field between it and the moving articles. The paint sprayer (right—top) has a disk atomizer. Diagram below shows the bell-shaped atomizer.

On many jobs, it has been found advantageous to use a reciprocating disk. Products of all sizes—including large parts such as refrigerator cabinets and doors, may be successfully coated with the reciprocating disk. Multiple strokes of the disk make possible the application of heavy, uniform coatings in a single loop. Speed of the disk travel can be automatically varied within the stroke to apply more or less paint in certain areas as desired. The reciprocating disk may be either floor or ceiling mounted.

A pump unit supplies paint through the hollow drive shaft of the atomizer. Rotation feeds the paint at a uniform rate through the atomizer to its outer edge. Atomization occurs under the influence of the electrostatic field, producing a spray pattern of electrically charged particles. The irresistible attraction of the field pulls the spray to the moving articles, and almost all of the spray is deposited.

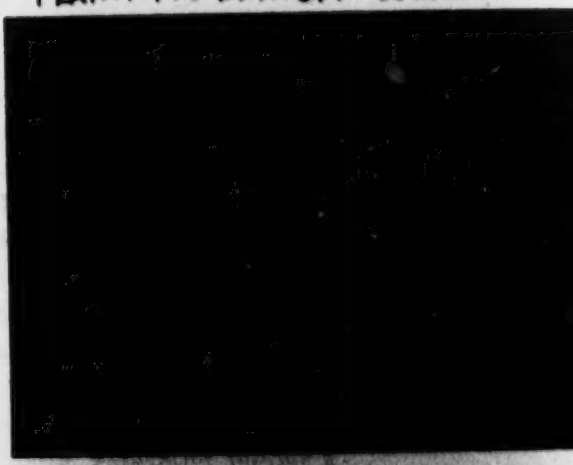

PLAINTIFF'S EXHIBIT OOOOO.

To Be Retained by Bidder
Ford Motor Company

Request for Quotation

Binks Manufacturing Company
105 E. Baltimore,
Detroit 2, Michigan
Important

Gentlemen

Please submit your lowest net price and terms of payment on materials listed below, subject to the following conditions.

If unable to supply amount specified please show hereon on the quantity you can supply and your guaranteed deliveries.

Please insert Net Unit Price opposite each item and mail copy, properly signed to this company, retaining bidder's copy for your reference.

We reserve the privilege of either accepting or rejecting your proposition within thirty days after receipt of your reply.

The following information must be filled in:

F.O.B. Lima, O. To be shipped via CL or LCL LCL

Shipping Point Chicago, Illinois

Weight Freight Rate Per Cwt.

Payment Terms Per quotation 56-26 attac'ed.

Your Best Delivery date: 16 weeks from rec'pt of order.

By K. Bolthouse
Ford Motor Company Purchasing Dept.

Date 12-1-55

Your Bid Should Reach Us Not Later Than 1-3-56

When Correspondence Is Necessary, Please Refer to No. P IR-94635

Delivery Required at Lima Engine Plant

Quantity and Description	Unit Weight	Net Unit Prices (Not Lot Prices)
The Prices Quoted Herein Are the Lowest Net Prices		
Kindly present your quotation in triplicate to Design Fabricate and Install the following:		
(1) Electrostatic Spray Unit for Mercury and Lincoln Exhaust Manifolds, Lima Plant, 1958 Program, in accordance with Spec. 115-EF-1240, dated 11-16-55. For painting Mercury and Lincoln Exhaust Manifolds. Your price is to be firm and of sufficient detail so that intelligent breakdown of same can be made. Also, indicate earliest delivery date.		Prices per Binks quotation 56-26 and 56-26-Alter. attached

FIR-94635 KB:md

Purchase Notice Number

Any suggestions relating to proposed changes in the supplies covered by the request for quotation which you believe will result in improvements in the supplies or their use will be welcomed. Ford Motor Company acquires no rights under your patents but you acknowledge that such suggestions are not submitted on a confidential basis and that all rights, claims and remedies in respect of them (other than those arising from such patents) are waived

please advise us of your lowest quotation for supplies conforming to both the blueprint design and any suggested changed design.

Address Reply:
Ford Motor Company
3000 Schaefer Road
Dearborn, Michigan

Attention: Mr. K. Bolthouse
Room 160—Adm. Annex

Firm Name
Binks Manufacturing Company
Signed by Officer of Company
Burke B. Roche,
President
Date 1/10/56

HHG:JT 3

Binks Manufacturing Company
3114 Carroll Avenue
Chicago 12, Hl.

Jan. 25, 1956

56-26-Alternate,
Revised

K. Bolthouse,
Rm. 160, Adm. Annex

cc: Binks Detroit
R. T. Hardy
Industrial
BBR
Extra
General

Ford Motor Company
3000 Schaefer Road
Dearborn, Michigan

Subject: Your No. PIR-94635
Lima Engine Plant

In compliance with your request, we are pleased to submit the following revision to our Quotation 56-25, Alternate, page No. 2, dated Jan. 10, 1956:

We wish to submit Binks alternate (revised) proposal for electrostatic painting of exhaust manifolds substituting the Binks electrostatic emitter in place of the Ford Motor Company electrostatic gun. This change alters the original Ford system as follows:

1. The booth, booth accessories and high voltage supply will remain the same.
2. The hydraulic system will not be required on our unit.
3. The four Ford Motor Company guns and supports are replaced by three Binks electrostatic emitters, emitter field frame and supports.

4. The pneumatic and paint control system is simplified by connecting the Binks emitter together. Only one paint regulator is used to supply all three units and one solenoid operated three-way air valve built into each emitter unit. An automatic flushing system using Ross solenoid valves and an electric timer will be used between the paint regulator and the emitters for flushing emitters with air and thinner.
5. The electrical control system is revised to suit the changes made.

Price Delivered & Erected Lima, Ohio.....$17,890.00
Delivery: 14 weeks from receipt of order.

This bid shall not be binding upon Binks Manufacturing Company as an offer unless and until Ford Motor Company shall indemnify Binks Manufacturing Company and hold it free and harmless against any and all suits or causes of action which may be brought against Binks Manufacturing Co. for infringement and/or contributory infringement of Starkey et al. patent 2,685,536 by reason of manufacturing and furnishing to Ford Motor Company the devices comprising the subject matter of said bid or by use by Ford Motor Company of said devices.

Terms and conditions of our original quotation 56-25 or Jan. 10, 1956 (pages 3 and 4) to apply equally to this revision.

Binks Manufacturing Co.
Burke B. Roche,
President

HHG:JT 3

Binks Manufacturing Company
3114 Carroll Avenue
Chicago 12, Ill.

Ford Motor Company
3000 Schaefer Road
Dearborn, Michigan

cc: Binks Detroit
R. T. Hardy
Binks Cleveland
Industrial
BBR
Extra
General

Jan. 10, 1956
56-26

K. Bolthouse,
Room 160, Adm. Annex

(Same quote to Ford Motor Co. for Cleveland Engine Plant #1 quote no. 56-25)

Subject: Your No. PIR-94635
Lima Engine Plant

In accordance with your request of Dec. 1, 1955, we are pleased to quote on the following:

Electrostatic Paint Booth & Equipment

for exhaust manifolds in accordance with your specifications and drawings, 115-ZE-64, 70-ZE-1060, 70-ZE-1061, 49-ZE-18, 70-ZE-1062 and 56-ZU-2, SH #9.

Price, Delivered and Erected Lima, Ohio.....$24,800.00
Delivery, 16 weeks from receipt of order.

The above bid shall not be binding upon Binks Manufacturing Company as an offer unless and until Ford Motor Company shall indemnify Binks Manufacturing Company and hold it free and harmless against any and all

suits or causes of action which may be brought against Binks Manufacturing Co. for infringement and/or contributory infringement of any and all unexpired patents by reason of manufacturing and furnishing to Ford Motor Company the devices comprising the subject matter of said bid, or by use by Ford Motor Company of said devices.

56-26—Alternate

Alternate

(Ref. Dwg. No. SK-624)

We wish to submit Binks alternate proposal for electrostatic painting of exhaust manifolds substituting the Binks electrostatic emitter in place of the Ford Motor Company electrostatic gun. This change alters the original Ford system as follows:

1. The booth, booth accessories and high voltage supply will remain the same.
3. The hydraulic system will not be required on our unit.
3. The four Ford Motor Company guns and supports are replaced by three Binks electrostatic emitters, emitter field frame and supports.
4. The pneumatic and paint control system is simplified by connecting the Binks emitters together. Only one paint regulator is used to supply all three units and one solenoid operated three-way air valve simultaneously controls the air piston operated needle valve built into each emitter unit. A manually operated valve is used between the paint regulator and the emitters for flushing the emitters with air and thinner.
5. The electrical control system is revised to suit the changes made.

Price Delivered & Erected Lima, Ohio.....$16,925.90
Delivery: 14 weeks from receipt of order.

The above bid shall not be binding upon Binks Manufacturing Company as an offer unless and until Ford Motor Company shall indemnify Binks Manufacturing Company and hold it free and harmless against any and all suits or causes of action which may be brought against Binks Manufacturing Co. for infringement and/or contributory infringement of Starkey et al. patent 2,685,536 by reason of manufacturing and furnishing to Ford Motor Company the devices comprising the subject matter of said bid or by use by Ford Motor Company of said devices.

Quotation

Binks Manufacturing Co.
3114-44 Carroll Avenue
Chicago 12, Ill.

Date Jan. 10, 1956
Our No. 56-26 and 56-26
Alternate

Ford Motor Company

Page No. 3

Purchaser: It is understood and agreed that the Purchaser is to do the following, unless otherwise specified:

Assume all charges for any changes made after approved drawings are sent to Binks Manufacturing Company, according to the amount of work done on the order and the cost of the changes requested.

Furnish, install and connect all electrical equipment—such as lights, switches, motor starters, etc. (By Binks)

Provide material and labor to connect material drains and overflows on equipment to the building waste line.

Provide and run specified water supply lines to the equipment and make final connections to the equipment and to the external water seals of the pumps.

Clear and prepare the site for erection.

Unload the equipment from trucks or cars. (By Binks)

Provide safe storage space, if necessary, and deliver to the site of erection as required by the erecting crew.

Furnish the necessary material, labor, tools and equipment to cut, repair and flash all necessary holes in floors, walls, ceilings, roofs and windows for the proper installation of the equipment.

Provide, install and connect sprinkler heads as required. (By Binks)

Furnish and install all compressed air lines as required, for operation of the spray painting equipment.

Provide foundations, masonry work, grouting, supports, builders' and joiners' work, and all excavations, according to detailed drawings presented by the Binks Manufacturing Company.

Assume all Local, State and Federal taxes of any kind or character in connection with the purchase of the above.

Guarantee: The equipment manufactured by us is guaranteed to be free from all latent defects in material and workmanship disclosed under normal use and service, and should any part thereof be found, within one year from date of shipment, to be so defective at the time furnished, we will repair said part. This guarantee shall not apply to any of our apparatus which shall have been repaired or altered outside of our factory in any way, so as in our judgment, to affect its stability, nor which has been subjected to misuse, negligence or accident. Our responsibility, however, is expressly limited to the material furnished by us, and we are not liable for any damages to building, contents, products or persons.

Page No. 4

In the case of standard apparatus furnished but not manufactured by us such as Motors, Ovens, Heaters, Controls, etc., we extend to you the same guarantee as is is given by their respective manufacturers.

Shipment: All dates fixed for shipment, delivery and installation as set forth herein, are made in good faith and we will use all reasonable diligence to insure adherence to these promises, but we shall not be liable for damage due to delays.

If this quotation is based on a delivered and erected price, the erection is quoted on the basis of installing this equipment during regular working hours of the regular 40 hour work week. Work outside of this period will be performed on a written order from the Purchaser. Charges will only be made for the overtime labor allowance paid above the regular hour rates.

Costs of erection included herewith contemplate the completion of work by others (wiring, drains, steam piping, etc.), in time to allow Binks' supervisor to test and inspect equipment before leaving the job. If it becomes necessary for the Binks' supervisor to return to the job for the purpose of starting the job, same will be done at the regular rate of $50.00 per day plus transportation to and from the job.

We shall not be liable for any loss or damage resulting from delay in shipment due to Fires, Floods, Strikes, Riots, Thefts, Accidents, or any other causes beyond our reasonable control.

Purchaser is to provide electric service and make necessary electrical connections required at the time of erection for lighting, welding machines, electric drills, etc.

Where state laws or municipal ordinances require permits to install equipment covered by this quotation, it is

understood the purchaser assumes the responsibility for securing such approval and is to pay for any and all fees in connection therewith.

Terms: With Erection:

Partial shipments of an order will be made as material becomes available and the material included in such partial shipments will be invoiced as shipped. Payment of 75% of each invoice will become due 30 days after date of delivery of partial shipments to the job, and the remainder of such invoice will become payable to the extent of 15% thereof on completion of the work and the balance upon approval thereof.

Terms: Without Erection

Net 30 days after date of Invoice. Partial shipments of an order may be made as material becomes available, and the material included in such partial shipments will be invoiced when shipped. Payment therefor will become due thirty days from date of invoice.

Date 1/10/56 Terms As above Total F.O.B. As indicated

Binks Manufacturing Co.
Approved by
Burke B. Roche,
President

Accepted:

.....

.....

Date.....

Ford Motor Company

Equipment Specification No. 115-EF-1240
P.N. No..... P.O. No.....
P.I.R. No. 94635

Subject: Electrostatic Paint Booth and Equipment for Mercury and Lincoln Manifolds (XE-31575) (XE-31573)

Plant Lima Engine Plant

Included Dwg's 115-ZE-64, 70-ZE-1060, 70-ZE-1061, 49-ZE-18, 70-ZE-1062 and 56-ZU-2, Sh. #9

Date 11-16-55

Approvals
F. Webster 11-21-55
J. B. Lamson 11-21-55
R. L. Valmans 11-21-55

Revisions

Dwg. No.	Sheet No.	Location	Date	Remarks

W. C. Kryska,
Supervisor Plant Layout, Equipment and Material Handling Section, Engine Manufacturing Engineering, Engine and Foundry Division.

Instructions to Bidders.

A. Proposals will be received by the Ford Motor Company, Facilities and General Supplies Purchasing, Administration Building, Dearborn, Michigan.

B. Proposals will be itemized, detailed and integrated to cover all component equipment, accessories and trades

necessary to complete (1) Electrostatic spray unit, as specified hereinafter, including installation.

C. Proposals shall be submitted in quintuplicate (one original and four copies) on bidder's letterhead stationery, and enclosed in an opaque envelope plainly marked "Proposal for Electrostatic Paint Unit for Lima Engine Plant, delivered to the aforementioned address on or before the time set for termination of the bidding.

D. Should any bidder find any discrepancies in the specification, or should he be in doubt as to their meaning, he shall at once notify Purchasing Engineering Department, who will clarify the matter in question by letter. Oral instruction is not binding until confirmed by letter or revision to specification.

E. In the event some product, process, finish or other requirement is specified, but is improcurable at the time of preparing proposal, the bidder shall base his proposal upon procurable substitutes, and shall describe such substitutions in a letter accompanying his proposal.

F. If the bidder finds he is not capable of bidding the equipment as specified, he may submit proposals on equivalent equipment, providing his proposal shall satisfy the production requirements as they are specified, or should the bidder be capable of proposing more than one type of equipment, he may do so, providing the proposals are enclosed in separate envelopes, and each proposal is complete unto itself.

G. Immediately after contract is awarded the successful contractor shall contact the Ford Motor Company, Manufacturing Engineering Department Equipment Section, Engine and Foundry Division regarding details of time schedule and working procedure. Contractor shall then prepare a Progress Schedule for his work, giving the starting and completion date for the various items of work included in this contract. Contractor shall submit this

schedule to Ford Motor Company Purchasing Department for approval.

H. The contractor shall be responsible for design and proper functioning of the installation and shall immediately make any adjustments or corrections of defect found necessary.

J. The bidder shall be held to have examined the premises and site, and to have satisfied himself as to the condition of the premises before the delivery of his proposal.

K. It is to be understood that the work hereinafter described shall be complete in every detail, even though every item necessarily involved is not particularly mentioned. The bidder shall be required to provide all labor, materials and supervision necessary for the entire completion of the work intended to be described, and shall not avail himself of any manifestly unintentioned error or omission, should such exist, unless he shall explicitly state that which he intends to provide at the time he submits his proposal.

L. No work shall be done or equipment obtained until (1) set of prints bearing approval of Ford Motor Company, Manufacturing Engineering Department, Equipment Section, Engine and Foundry Division is received by contractor. Where errors or omissions are discovered later, they will be immediately corrected by contractor.

M. Spray booth designated in this specification shall be designed and fabricated as per Ford Industrial Equipment Standards BAX, Sections 3, 4, 6, 8, 10, 11 and 18. All work shall be complete including the installation and exhaust system. All state and local codes and underwriters regulations shall be complied with in relation to the fabrication and installation of the booth.

N. The unloading of material and equipment and the moving of same to the job site shall be the responsibility of the vendor and shall be quoted as a separate item.

P. The Ford Motor Company will not be liable for the safekeeping of any equipment or supplies other than its own.

Q. The successful bidder will be furnished reference part prints and sample parts as required.

1. Purpose:

The purpose of the electrostatic paint booth and equipment is twofold; enclose the area within which exhaust manifolds are to be painted and to electrostatically paint the surface of the Mercury and Lincoln exhaust manifolds (XE-31575) (XE-31573) Oper. (40). The parts shall be painted while traveling on an overhead monorail conveyor. The paint to be used is M-1713-A air dry enamel.

2. Type:

A. This booth shall be of the dry type, closed, manless, with side exhaust.

B. The manifolds will be carried (two per hook, one right hand and one left hand) on swivel hooks incorporating a sprocket which will engage a length of silent chain (supported as a rack) within the booth. The hooks will be spaced at two-foot centers and will travel approximately 15 ft/min. The section of conveyor rail extending throughout the booth shall be amply supported and shielded as shown on Drawing 115-ZE-64.

3. Description of Parts:

The Mercury and Lincoln exhaust manifolds (XE-31575) (XE-31573) are irregular shaped common castings, right and left hand, of grade "B" cast iron. The approximate size is 17¼" by 8".

4. Capacity:

The equipment supplied shall be capable of electrostatic painting of 650 exhaust manifolds per hour @ 80 percent efficiency.

5. Construction:

The booth should be constructed as an enclosed platform with #18 gr. (min.) side panels. Due to the affinity of static electricity to sharp points and surfaces, special attention should be given to the elimination of such interferences within the area of the paint distributors (56-ZU-2, sheet #9).

The platform (of steel construction) is for the purpose of supporting the electrostatic equipment and to provide accessability to the damper and exhauster.

6. Lighting:

The lighting shall be of the type specified and shall be focused as shown on 115-ZE-65, sheet #1.

7. Safety:

Ford Motor Company has submitted this design to F. I. A. for their approval. However, the successful bidder is responsible for obtaining permits and approval for the construction, installation and operation of this booth. The O. S. and Y valves, in the sprinkler system, should be located at a minimum of (15) feet beyond the booth.

8. Cleanouts:

All tanks and enclosed compartments and ducts shall be provided with cleanout doors, located in convenient and accessible places.

9. Successful Bidder to Furnish:

A. Booth enclosure, platform, ladder and railing.

B. All ductwork, including stacks to extend 10 feet above highest point of building roof.

C. All required sprinkler heads and piping from existing mains.

D. Wiring to existing power supply.

E. Non-sparking axial fan complete with motor and drive.

F. 4"-I-7.7# monorail through booth complete with supporting structure.

G. Paint delivery and distribution equipment (including 56-ZU-2), piping and controls.

H. Electrostatic equipment, mounting, insulation and controls.

I. Flushing equipment, piping and controls.

J. Pneumatic piping and controls.

K. Centralized control panel for electrical and plumbing equipment mounted flush (or nearly flush) at the location shown.

L. Unloading and moving of material to job site.

M. Complete erection, paint, operation and inspection.

10. Ford Motor Company to Furnish:

A. Plant Layout print for location.

B. Drain deck and drain (if required).

C. Hole in roof and roof framing for exhaust system.

D. Utilities:

Water—45 P. S. I.
Electric—440 volt, 3 phase, 60 cycle.
Air—95 P. S. I.

E. Conveyor chain, trollies, hooks and exterior monorail.

11. Electrical and Hydraulic:

All motors shall conform to Ford Motor Company J. I. C. Standards. Shall be approved by Ford Motor Company.

All electrical, pneumatic and hydraulic equipment and installation thereof by the vendor shall conform to Ford Motor Company J. I. C. Standards.

Successful bidder shall furnish a complete stock list of

controls proposed for subject equipment. Ford Motor Commany to approve, request changes and/or reserve the right to furnish any or all of the controls. No fabrication or ordering of material shall be made until approval of preliminary drawings by Ford Motor Company.

Note: Latest revision of Ford Motor Company J. I. C. Standards.

12. Drawings:

Three (3) sets of preliminary prints shall be furnished by the vendor as soon as possible after having received the order. These prints shall give a complete engineering breakdown. One (1) set will be returned to the vendor with preliminary and general arrangement approval by Ford Motor Company. The tracings shall be changed or corrected, if necessary, and five (5) sets of finalized prints shall be furnished for final approval.

13. Delivery:

Outside contractor shall set forth in his proposal the earliest date, after receipt of order, upon which erection can be completed.

PLAINTIFF'S EXHIBIT PPPPP.

To Be Retained by Bidder
Ford Motor Company

Request for Quotation

Binks Manufacturing Company
105 Baltimore E.
Detroit 2, Michigan

Important

Gentlemen

Please submit your lowest net price and term of payment on materails listed below, subject to the following conditions.

If unable to supply amount specified please show hereon the quantity you can supply and your guaranteed deliveries.

Please insert Net Unit Price opposite each item and mail copy, properly signed to this company, retaining bidder's copy for your reference.

We reserve the privilege of either accepting or rejecting your proposition within thirty days after receipt of your reply.

The following information must be filled in:

F. O. B. Cleveland, O. To be shipped via ,
CL or LCL LCL

Shipping Point Chicago, Illinois
Weight.....Freight Rate per CWT.....
Payment Terms per quotation 56-25 attached.
Your Best Delivery Date: 16 weeks from rec'pt of order.

By K. Bolthouse

Date 10-21-55

Your Bid Should Reach Us Not Later Than 11-15-55

When Correspondence Is Necessary, Please Refer to No. P IR-94556

Delivery Required at Cleveland Engine Plant No. 1

Quantity and Description	Unit Weight	Net Unit Prices (Not Lot Prices)
The Prices Quoted Herein Are the Lowest Net Prices		
Kindly present your quotation, in triplicate, to cover the following:		
Electrostatic Paint Booth and Equipment for Exhaust Manifolds, per specifications attached hereto. Prices to be broken down to include:		See quotation 56-25 and 56-25 Alternate attached.
1. Material & Fabrication		
2. Motors		
3. Controls		
4. Field Piping		
5. Field Wiring		
6. Field Painting		
7. Motors		
8. Controls		
Part No. EDC-9428-29-30-31—Exhaust Manifolds. Your price is to be firm and of sufficient detail so that an intelligent breakdown of same can be made, also indicate earliest delivery date.		

Any suggestions relating to proposed changes in the supplies covered by the request for quotation which you believe will result in improvements in the supplies or their use will be welcomed. Ford Motor Company acquires no rights under your patents but you acknowledge that such suggestions are not submitted on a confidential basis and that all rights, claims and remedies in respect of them (other than those arising from such patents) are waived. Please ad-

vise us of your lowest quotation for supplies conforming to both the blueprint design and any suggested changed design.

Address reply:

Ford Motor Company
3000 Schaefer Road
Dearborn, Michigan

Attention: Mr. K. Bolthouse
Room 160—Adm. Annex

Firm Name Binks Manufacturing Company

.....

Signed by Officer of Company
Burke B. Roche, *President.*

KB:ls
PIR-94556

Date 1/10/56

Binks Manufacturing Company
3114 Carroll Avenue
Chicago 12, Ill.

HHC:JT 3

Jan. 25, 1956
56-25-Alternate Revision
Mr. K. Bolthouse
Room 160, Adm. Annex

Ford Motor Company
3000 Schaefer Road
Dearborn, Michigan

CC: Binks Detroit
R. T. Hardy
Binks Cleveland
Industrial
BBR
Extra
General

Subject: Your No. PIR 94556
Cleveland Engine Plant No. 1

In compliance with your request, we are pleased to submit the following revision to our Quotation No. 56-25, Alternate, page No. 2, dated Jan. 10, 1956:

We wish to submit Binks alternate (revised) proposal for electrostatic painting of exhaust manifolds substituting the Binks electrostatic emitter in place of the Ford Motor Company electrostatic gun. This change alters the original Ford system as follows:

1. The booth, booth accessories, and high voltage supply will remain the same.
2. The hydraulic system will not be required on our unit.
3. The four Ford Motor Company guns and supports are replaced by three Binks electrostatic emitters, emitter field frame and supports.

4. The pneumatic and paint control system is simplified by connecting the Binks emitter together. Only one paint regulator is used to supply all three units and one solenoid operated three-way air valve built into each emitter unit. An automatic flushing system using Rose solenoid valves and an electric timer will be used between the paint regulator and the emitters for flushing emitters with air and thinner.
5. The electrical control system is revised to suit the changes made.

Price, Delivered & Erected Cleveland Ohio.....$17,890.00

Delivery: 14 weeks from receipt of order.

This bid shall not be binding upon Binks Manufacturing Company as an offer unless and until Ford Motor Company shall indemnify Binks Manufacturing Company and hold it free and harmless against any and all suits or causes of action which may be brought against Binks Manufacturing Co. for infringement and/or contributory infringement of Starkey et al. patent 2,685,536 by reason of manufacturing and furnishing to Ford Motor Company the devices comprising the subject matter of said bid or by use by Ford Motor Company of said devices.

Terms and conditions of our original quotation 56-26 of Jan. 10, 1956 (pages 3 and 4) to apply equally to this revision.

Binks Manufacturing Co.
Burke B. Roche, *President.*

Binks Manufacturing Company
3114 Carroll Avenue
Chicago 12, Ill.

Jan. 10, 1956

56-25

Mr. K. Bolthouse
Room 160, Adm. Annex

HHC:JT 3

Ford Motor Company
3000 Schaefer Road
Dearborn, Michigan

CC: Binks Detroit
R. T. Hardy
Industrial
BBR
Extra
General

Subject: Your No. PIR-94556
Cleveland Engine Plant No. 1

In accordance with your request of Oct. 21, 1955 we are pleased to quote on the following:

Electrostatic Paint Booth & Equipment

for exhaust manifolds in accordance with your specifications and drawings 115-ZE-64, 10-ZE-1068, 70-ZE-1061, 49-ZE-18, 70-ZE-1062, and 56-ZU-2, Sh #9.

Price, Delivered & Erected Cleveland, Ohio.....$24,800.00

Delivery: 16 weeks from receipt of order.

The above bid shall not be binding upon Binks Manufacturing Company as an offer unless and until Ford Motor Company shall indemnify Binks Manufacturing Company and hold it free and harmless against and all suits or causes of action which may be brought against Binks Manufac-

turing Company for infringement and/or contributory infringement of any and all unexpired patents by reason of manufacturing and furnishing to Ford Motor Company the devices comprising the subject matter of said bid, or by use by Ford Motor Company of said devices.

Alternate

We wish to submit Binks alternate proposal for electrostatic painting of exhaust manifolds substituting the Binks electrostatic emitter in place of the Ford Motor Company electrostatic gun. This change alters the original Ford system as follows:

1. The booth, booth accessories, and high voltage supply will remain the same.
2. The hydraulic system will not be required on our unit.
3. The four Ford Motor Company guns and supports are replaced by three Binks electrostatic emitters, emitter field frame and supports.
4. The pneumatic and paint control system is simplified by connecting the Binks emitters together. Only one paint regulator is used to supply all three units and one solenoid operated three-way air valve simultaneously controls the air piston operated needle valve built into each emitter unit. A manually operated valve is used between the paint regulator and the emitters for flushing the emitters with air and thinner.
5. The electrical control system is revised to suit the changes made.

Price, Delivered & Erected Cleveland, Ohio.....$16,925.00
Delivery: 14 weeks from receipt of order.

The above bid shall not be binding upon Binks Manufacturing Company as an offer unless and until Ford Motor Company shall indemnify Binks Manufacturing Company

and hold it free and harmless against any and all suits or causes of action which may be brought against Binks Manufacturing Co. for infringement and/or contributory infringement of Starkey et al. patent 2,685,536 by reason of manufacturing and furnishing to Ford Motor Company the devices comprising the subject matter of said bid or by use by Ford Motor Company of said devices.

Quotation

Binks Manufacturing Co.
3114-44 Carroll Avenue
Chicago 12, Ill.

Date Jan. 10, 1956

Our No. 56-25 &
56-25 Alternate

Your No. .....

Attention .....

Ford Motor Company

Page No. 3

Purchaser: It is understood and agreed that the Purchaser is to do the following, unless otherwise specified:

Assume all charges for any changes made after approved drawings are sent to Binks Manufacturing Company, according to the amount of work done on the order and the cost of the changes requested.

Furnish, install and connect all electrical equipment—such as lights, light switches, motor starters, etc. (By Binks)

Provide material and labor to connect material drains and overflows on equipment to the building waste line.

Provide and run specified water supply lines to the equipment and make final connections to the equipment and to the external water seals of the pumps.

Clear and prepare the site for erection.

Unload the equipment from trucks or cars. (By Binks)

Provide safe storage space, if necessary, and deliver to the site of erection as required by the erecting crew.

Furnish the necessary material, labor, tools and equipment to cut, repair and flash all necessary holes in floors, walls, ceilings, roofs and windows for the proper installation of the equipment.

Provide, install and connect sprinkler heads as required. (By Binks)

Furnish and install all compressed air lines as required, for operation of the spray painting equipment.

Provide foundations, masonry work, grouting, supports, builders' and joiners' work, and all excavations, according to detailed drawings presented by the Binks Manufacturing Company.

Assume all Local, State and Federal taxes of any kind or character in connection with the purchase of the above.

Guarantee: The equipment manufactured by us is guaranteed to be free from all latent defects in material and workmanship disclosed under normal use and service, and should any part thereof be found, within one year from date of shipment, to be so defective at the time furnished, we will repair said part. This guarantee shall not apply to any of our apparatus which shall have been repaired or altered outside of our factory in any way, so as in our judgment, to affect its stability, nor which has been subjected to misuse, negligence or accident. Our responsibility, however, is expressly limited to the material furnished by us, and we are not liable for any damages to building, contents, products or persons.

Quotation

Binks Manufacturing Co.
3114-44 Carroll Avenue
Chicago 12, Ill.

Date Jan. 10, 1956
Our No. 56-25 &
56-25 Alternate
Your No. .....
Attention .....

Ford Motor Co pany

Page No. 4

In the case of standard apparatus furnished but not manufactured by us such as Motors, Ovens, Heaters, Controls, etc., we extend to you the same guarantee as is given by their respective manufacturers.

Shipment: All dates fixed for shipment, delivery and installation as set forth herein, are made in good faith and we will use all reasonable diligence to insure adherence to these promises, but we shall not be liable for damage due to delays.

If this quotation is based on a delivered and erected price, the erection is quoted on the basis of installing this equipment during regular working hours of the regular 40 hour work week. Work outside of this period will be performed on a written order from the Purchaser. Charges will only be made for the overtime labor allowance paid above the regular hour rates.

Costs of erection included herewith contemplate the completion of work by others (wiring, drains, steam piping, etc.), in time to allow Binks' supervisor to test and inspect equipment before leaving the job. If it becomes necessary for the Binks' supervisor to return to the job for the purpose of starting the job same will be done at the regular rate of $50.00 per day plus transportation to and from the job.

We shall not be liable for any loss or damage resulting from delay in shipment due to Fires, Floods, Strikes, Riots, Thefts, Accidents, or any other causes beyond our reasonable control.

Purchaser is to provide electric service and make necessary electrical connections required at the time of erection for lighting, welding machines, electric drills, etc.

Where state laws or municipal ordinances require permits to install equipment covered by this quotation, it is understood the purchaser assumes the responsibility for securing such approval and is to pay for any and all fees in connection therewith.

Terms: With Erection:

Partial shipments of an order will be made as material becomes available and the material included in such partial shipments will be invoiced as shipped. Payment of 75% of each invoice will become due 30 days after date of delivery of partial shipments to the job, and the remainder of such invoice will become payable to the extent of 15% thereof on completion of the work and the balance upon approval thereof.

Terms: Without Erection:

Net 30 days after date of Invoice. Partial shipments of an order may be made as material becomes available and the material included in such partial shipments will be invoiced when shipped. Payment therefor will become due thirty days from date of invoice.

Date 1/10/56 Terms As above Total F.O.B. As indicated

Binks Manufacturing Co.
Approved by Burke B. Roche,
President.

Accepted:

.....

.....

Date.....

Ford Motor Company

Equipment Specification No. 115-EF-1150
P. N. No. ..... P. O. No. .....
P. I. R. 94556

Subject Electrostatic Paint Booth and Equipment for Exhaust Manifolds EDC-9428-29-30-31

Plant Cleveland Engine Plant No. 1

Included Dwg's. 115-ZE-64, 70-ZE-1060, 70-ZE-1061, 49-ZE-18, 70-ZE-1062 and 56-ZU-2, Sh. #9.

Approvals		Date 10-3-55
R. Welston	10-14-55	
D. M. Ryan	10-6-55	
R. S. Demasser	10-6-55	
J. R. Lanyon	10-6-55	

Revisions

Dwg. No.	Sheet No.	Location	Date	Remarks

W. C. Kryska, *Supervisor*
Plant Layout, Equipment and
Material Handling Section
Engine Manufacturing Engineering
Engine and Foundry Division

Instructions to Bidders.

A. Proposals will be received by the Ford Motor Company, Facilities and General Supplies Purchasing, Administration Building, Dearborn, Michigan.

B. Proposals will be itemized, detailed and integrated to cover all component equipment, accessories and trades

necessary to complete (1) single paint spray booth as specified hereinafter.

C. Proposals shall be submitted in quintuplicate (one original and four copies) on bidder's letterhead and stationery, and enclosed in an opaque envelope plainly marked "Proposal for Electrostatic Paint Booth for Cleveland Engine Plant #1," delivered to the aforementioned address on or before the time set for termination of the bidding.

D. Should any bidder find any discrepancies in the specification, or should he be in doubt as to their meaning, he shall at once notify Purchasing Engineering Department, who will clarify the matter in question by letter. Oral instruction is not binding until confirmed by letter or revision to specification.

E. In the event some product, process, finish or other requirement is specified, but is improcurable at the time of preparing proposal, the bidder shall base his proposal upon procurable substitutes, and shall describe such substitutions in a letter accompanying his proposal.

F. If the bidder feels he is not capable of bidding the equipment as specified, he may submit proposals on equivalent equipment, providing his proposal shall satisfy the production requirements as they are specified, or should the bidder be capable of proposing more than one type of equipment, he may do so, providing the proposals are enclosed in separate envelopes, and each proposal is complete unto itself.

G. Immediately after contract is awarded the successful contractor shall contact the Ford Motor Company, Manufacturing Engineering Department Equipment Section, Engine and Foundry Division regarding details of time schedule and working procedure. Contractor shall then prepare a Progress Schedule for his work, giving the starting and completion date for the various items of work included in this contract. Contractor shall submit this

schedule to Ford Motor Company Purchasing Department for approval.

H. The contractor shall be responsible for design and proper functioning of the installation and shall immediately make any adjustments or corrections of defect found necessary.

J. The bidder shall be held to have examined the premises and site, and to have satisfied himself as to the condition of the premises before the delivery of his proposal.

K. It is to be understood that the work hereinafter described shall be complete in every detail, even though every item necessarily involved is not particularly mentioned. The bidder shall be required to provide all labor, materials and supervision necessary for the entire completion of the work intended to be described, and shall not avail himself of any manifestly unintentioned error or omission, should such exist, unless he shall explicitly state that which he intends to provide at the time he submits his proposal.

L. No work shall be done or equipment obtained until (1) set of prints bearing approval of Ford Motor Company, Manufacturing Engineering Department, Equipment Section, Engine and Foundry Division is received by contractor. Where errors or omissions are discovered later, they will be immediately corrected by contractor.

M. Spray booth designated in this specification shall be designed and fabricated as per Ford Industrial Equipment Standards BAX, Sections 3, 4, 6, 8, 10, 11 and 18. All work shall be complete including the installation and exhaust system. All state and local codes and underwriters regulations shall be complied with in relation to the fabrication and installation of the booth.

N. The unloading of material and equipment and the moving of same to the job site shall be the responsibility of the vendor and shall be quoted as a separate item.

P. The Ford Motor Company will not be liable for the safekeeping of any equipment or supplies other than its own.

Q. The successful bidder will be furnished reference part prints and sample parts as required.

Electrostatic Paint Booth and Equipment for Exhaust Manifolds.

1. Purpose:

The purpose of this paint booth is to enclose the area in which manifolds are being painted while traveling on an overhead monorail conveyor. Paint to be used is M-1713-A air-dry enamel.

2. Product:

The products to be painted are EDC-9428-29-30-31 Ford Manifolds. Total production is 375/hr @ 80% efficiency.

3. Type:

3.1 This booth shall be of the dry type, closed, manless, with side exhaust.

3.2 The manifolds will be carried (two per hook) on swivel hooks incorporating a sprocket which will engage a length of silent chain (supported as a rack) within the booth. The hooks will be spaced at two-foot centers and will travel approximately 15 ft/min. The section of conveyor rail extending throughout the booth shall be amply supported and shielded as shown on Drawing 115-ZE-64.

4 Construction:

4.1 The booth should be constructed as an enclosed platform with #18 ga. (min.) side panels. Due to the

affinity of static electricity to sharp points and surfaces, special attention should be given to the elimination of such interferences within the area of the paint distributers (56-ZU-2, sheet #9).

4.2 The platform (of steel construction) is for the purpose of supporting the electrostatic equipment and to provide accessability to the damper and exhauster.

5. Lighting:

The lighting shall be of the type specified and shall be focused as shown on 115-ZE-64, sheet #1.

6. Safety:

Ford Motor Company has submitted this design to F. I. A. for their approval. However, the successful bidder is responsible for obtaining permits and approval for the construction, installation and operation of this booth. The O. S. and Y valves, in the sprinkler system, should be located at a minimum of (15) feet beyond the booth.

7. Cleanouts:

All tanks and enclosed compartments and ducts shall be provided with cleanout doors, located in convenient and accessible places.

8. Successful bidder to Furnish:

8.1 Booth enclosure, platform, ladder and railing.

8.2 All ductwork, including stacks to extend 10 feet above highest point of building roof.

8.3 All required sprinkler heads and piping from existing mains.

8.4 Wiring to existing power supply.

8.5 Non-sparking axial fan complete with motor and drive.

8.6 4-I-7.7 monorail through booth complete with supporting structure.

8.7 Paint delivery and distribution equipment (including 56-ZU-2), piping and controls.

8.8 Electrostatic equipment, mounting, insulation and controls.

8.9 Flushing equipment, piping and controls.

8.10 Pneumatic piping and controls.

8.11 Centralized control panel for electrical and plumbing equipment mounted flush (or nearly flush) at the location shown.

8.12 Unloading and moving of material to job site.

8.13 Complete erection, paint, operation and inspection.

9. Ford Motor Company to Furnish:

9.1 Plant Layout print for location.

9.2 Drain deck and drain (if required).

9.3 Hole in roof and roof framing for exhaust system.

9.4 Utilities:

Water—45 P.S.I.
Electric—440 Volt, 3 Phase, 60 Cycle.
Air—80 P.S.I.

9.5 Conveyor chain, trollies, hooks and exterior monorail.

10. Electrical:

All motors shall conform to Ford Motor Company J. I. C. Standards. Shall be approved by Ford Motor Company.

All electrical, pneumatic and hydraulic equipment and installation thereof by the vendor shall conform to Ford Motor Company J. I. C. Standards.

Successful bidder shall furnish a complete stock list of controls proposed for subject equipment. Ford Motor Company to approve, request changes and/or reserve the right to furnish any or all of the controls.

No fabrication or ordering of material shall be made until approval of preliminary drawings by Ford Motor Company.

Note: Latest revision of Ford Motor Company J. I. C. Standards.

11. Drawings:

Three sets of preliminary prints shall be furnished by the vendor as soon as possible after having received the order. These prints shall give a complete engineering breakdown. One set will be returned to the vendor with preliminary and general arrangement approval by Ford Motor Company. The tracings shall be changed or corrected, if necessary, and five (5) sets of finalized prints shall be furnished for final approval.

12. Delivery:

Outside contractor shall set forth in his proposal the earliest date, after receipt of order, upon which erection can be completed.

PLAINTIFF'S EXHIBIT VVVVV-1.

427

IN THE UNITED STATES DISTRICT COURT
FOR THE SOUTHERN DISTRICT OF INDIANA
INDIANAPOLIS DIVISION

BINKS MANUFACTURING CO.
V.
[illegible] ELECTRO-COATING CORP.

CIVIL ACTION
NO. IP 56-C-252

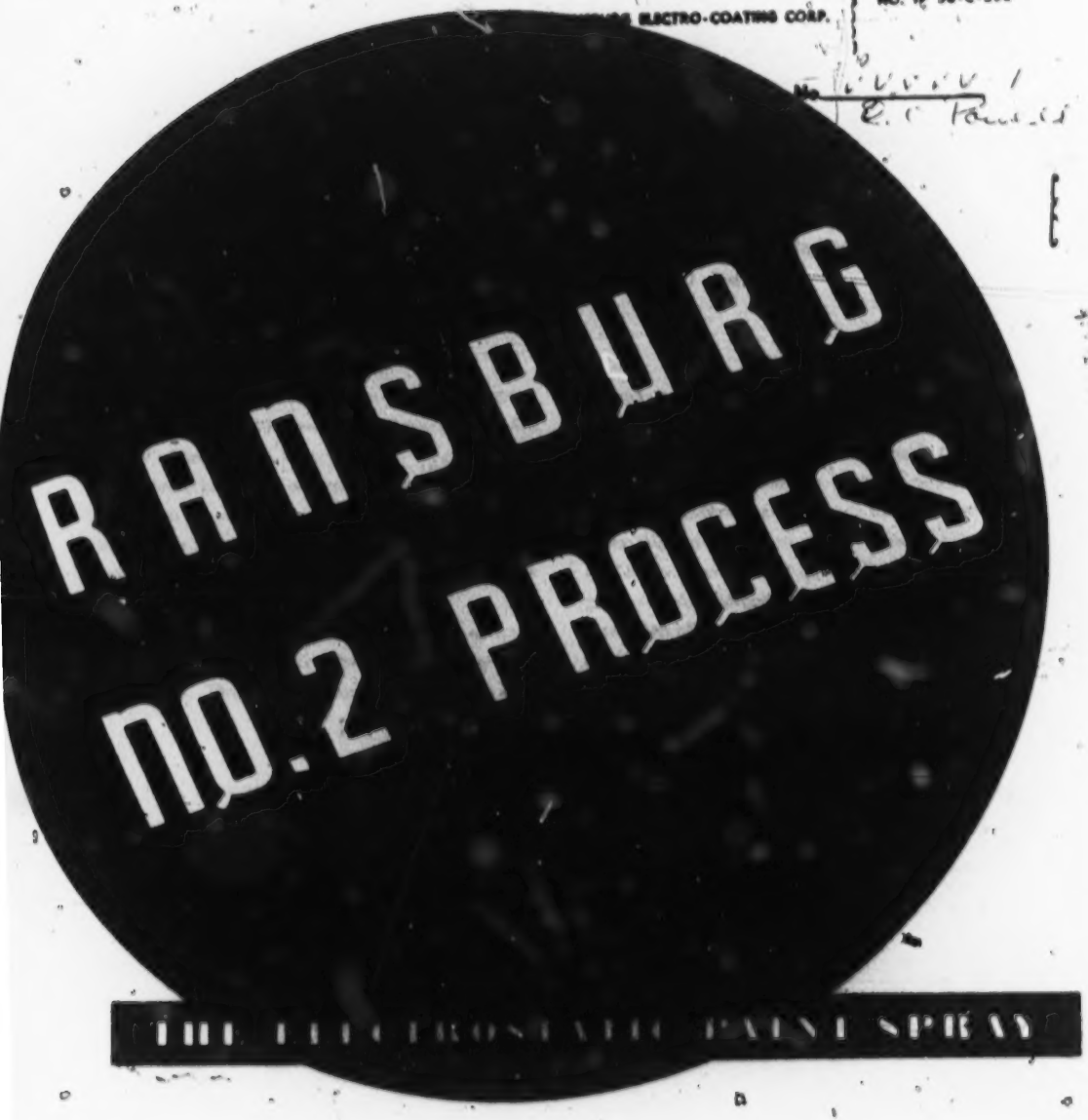

No. VVVVV-1
E. C. Powell

RANSBURG NO. 2 PROCESS

THE ELECTROSTATIC PAINT SPRAY

Rangeville [illegible]
Ex 34-A

WHAT and HOW

Electrostatic spray painting, originated and applied by Ransburg, has been used by industry for years. Hundreds of these units are operating on factory production lines in this country and abroad, saving millions of dollars annually by more efficient use of paint and labor.

The Ransburg No. 2 Process is the *only* spray method capable of almost 100% painting efficiency on a wide variety of production jobs.

The basic process is shown in the diagram below. Articles to be painted are carried by a conveyor into the coating zone. They are grounded electrically by their hangers and, depending upon their shape, may be rotated.

A voltage pack is connected to a paint sprayer, creating an electrostatic field between it and the moving articles. The paint sprayer shown has a bell-shaped atomizer, and several other styles are available, depending upon the job requirements.

A pump unit supplies paint through the hollow drive shaft of the atomizer, and rotation feeds the paint at a uniform rate through the atomizer to its outer edge. Atomization occurs under the influence of the electrostatic field, producing a spray pattern of electrically charged particles, while the irresistible attraction of the field pulls the spray to the moving articles—and all of the spray is deposited.

RANSBURG

© 1953
RANSBURG ELECTRO-COATING CORP.
INDIANAPOLIS, INDIANA

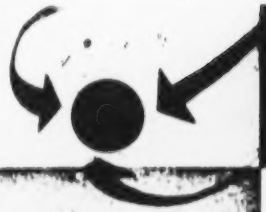

No. 2

TYPE OF ARTICLE	Almost any metal article, and many non-metallic articles, can be coated by the No. 2 Process. Although ideally suited for coverage of exterior surfaces, this process can coat many recessed areas.
TYPE OF COATING	Most coating materials can be applied. Lacquers, varnishes, and synthetic enamels, whether electrically-conducting or not, can be handled satisfactorily. "Special" materials are seldom needed.
PRODUCTION RATE	Any reasonable production rate can be met by the No. 2 Process. Conveyorized handling of the work is a prerequisite.
TYPE OF CONVEYOR	Monorail, spindle, cross-bar or belt conveyors can be used.
POWER REQUIRED	Average power required is 2 kw, from a 220 or 440 volt, 60 cycle supply.
VENTILATION REQUIRED	Only a relatively small air movement for removal of solvent vapor is required. Conventional type spray booths are not necessary since there is no overspray paint to be exhausted.
MAINTENANCE	Clean-up and maintenance care is substantially less than other spray methods.
EQUIPMENT	When desired, Ransburg will supply the complete automatic coating unit, consisting of electrostatic voltage source, electrical controls, insulators, atomizers, and coating material supply system. The user furnishes only the conveyor, workholders and solvent ventilation.

EXHIBIT D-21.

Adopted July, 1956.

Ransburg.

No.....

Electrostatic Spray Process Agreement.

User: .....

Plant: ..... Units: ..... Drawing No. .....

Items: .....

Ransburg Electro-Coating Corp., of Indianapolis, Indiana (herein called Ransburg), which owns patents and inventions for electrostatically depositing liquid spray particles atomized by compressed air, herein called "the Process," has done and is doing extensive engineering and research on the Process, and has designed special equipment therefor; and the above User, which desires to use the Process, engineering and equipment, agrees that:

1. License.

During the term and subject to the provisions hereof, Ransburg grants User a non-exclusive license to use the Process at User's plant, with the number of units, in accordance with Ransburg's drawing made a part hereof (subject to such changes in equipment, procedure, and specifications as Ransburg may from time to time designate) for coating the items, all as set forth above.

2. Equipment and Supervision.

At the time requested by User, Ransburg will ship prepaid to the above plant, for the use of the Process, high voltage and electrical control equipment, and will furnish expert supervision for installing and placing it in operation. If Ransburg's supervisor is required to make more than one trip to User's plant or is there

delayed for any reason not chargeable to Ransburg, User will pay Ransburg $75.00 for each day of such extra trip or delay, plus transportation expenses incurred. User shall furnish all other labor, materials and equipment for the installation and use of the Process.

Ransburg will furnish replacements for any defective part of its equipment at the expense of (1) Ransburg, if the part becomes defective through ordinary wear and tear from proper use and if it is returned prepaid within 30 days after becoming defective, or (2) User, at Ransburg's applicable standard replacement charge, if it becomes defective through improper use or negligence of User, or is not returned within said 30 day period.

Ransburg's obligation to furnish equipment, supervision and replacement parts is subject to availability of the equipment and parts, to prior commitments, fires, strikes, acts of God, governmental decrees or actions, and any other causes beyond Ransburg's control, postponing or preventing performance.

3. Fees.

User will pay Ransburg at Indianapolis, Indiana: (1) An initial fees of $.....sixty days after shipment of Ransburg's equipment to User, or 30 days after its installation, whichever period expires earlier; and (2) For each calendar month during the term hereof, commencing upon completion of installation of the equipment or on the thirtieth day following shipment thereof, whichever occurs earlier, a monthly fee comprising: a basic monthly fee of $100.00, payable in any event, but prorated for any partial initial calendar month; and an additional monthly fee based on the cost to User of the coating material (including all its ingredients) used in said unit(s) during said month according to the following schedule:

Monthly Cost of Coating Material	Monthly Fee
Less than $4,000.00	10% of Cost
$4,000 to $8,000	$400.00 plus 5% of Cost over $4,000.00
In Excess of $8,000.00	$600.00

At the request of either party the basic monthly fee from time to time shall be adjusted commensurate with changes of not less than ten points from the value for January, 1956 of the Consumer Price Index, Large Cities Combined, All items, of the Bureau of Labor Statistics of the U. S. Department of Labor, on the 1947-1949 base, or any successor thereto.

User will keep and make available for Ransburg's inspection during business hours permanent records of all information required for computing monthly fees. Within 10 days following each calendar month User will furnish to Ransburg a written report containing all information for computing the fee for that month, with User's computation and payment of the fee.

If shipment of the equipment is requested by User more than one year after Ransburg's acceptance of this agreement, Ransburg shall have the right to change the fees and terms of this agreement in conformity with its policy at that time.

4. Title and Use of Equipment.

All equipment furnished by Ransburg shall remain its personal property and in User's possession until returned to Ransburg as herein provided. User will pay Ransburg for any loss of, or damage to, Ransburg's equipment while in the possession of User or its agents and upon termination of this agreement will at its expense promptly deliver the equipment, freight prepaid, to Ransburg at Indianapolis, Indiana, in as good condition as when received, except only for ordinary wear and tear from proper use.

User will pay, or reimburse Ransburg for, any taxes or fees imposed by any governmental authority by reason of the installation, possession, use, or location of any equipment or services furnished by Ransburg hereunder.

User will use the equipment and the Process in accordance with Ransburg's safety and operating recom-

mendations, and will not make any use thereof except as herein provided. Ransburg shall have the right to enter User's premises during business hours to inspect the condition and use of the equipment.

5. Patent Infringement.

Ransburg indemnifies User to the extent of the fees paid under 3 above against liability for patent infringement by the Process if used as provided herein. Ransburg will defend at its expense any suit brought against User for such infringement, provided User promptly notifies Ransburg of any claim of infringement, permits Ransburg to assume its defense, and cooperates with Ransburg as to such defense and as to any changes in equipment or use thereof.

6. Liability.

Ransburg shall not be liable to User (except as provided in 5 above) for damages resulting from the installation, servicing, presence, use, or condition of Ransburg's equipment of User's plant. User indemnifies Ransburg against all claims of others for any damages resulting from the installation, servicing, presence, use, or condition of Ransburg's equipment at User's plant, provided User shall not be liable for any damages Ransburg may sustain because of Ransburg's obligations under 5 above. Ransburg makes no warranty, express or implied, relative to the Process or equipment.

7. Term.

This agreement shall be in effect from the date of acceptance by Ransburg until terminated as follows: (1) User may terminate as of the end of any calendar month or as of the date of return of Ransburg's equipment, whichever is later, upon 30 days' written notice to Ransburg; (2) Ransburg may terminate as of any date after three years from the acceptance date hereof, upon six months' written notice to User; or (3) Ransburg may terminate forthwith should User become

insolvent or bankrupt or should any breach or default by User remain uncurred for 20 days after written notice thereof from Ransburg, and in any such case Ransburg may enter User's premises and repossess its equipment without it or its authorized representatives incurring any liability for trespass or other causes and without prejudice to its rights to recover amounts owing it hereunder or damages for breach of this agreement.

This written agreement constitutes the entire agreement between the parties, and no terms or understandings not herein contained (whether included in any purchase order or otherwise) shall be valid or binding unless contained in a writing signed by both parties. This agreement shall be governed by the law of Indiana.

Signed by User on ....., 195....

..... (User)

By .....

(Title)

Accepted by Ransburg on ....., 195....

Ransburg Electro-Coating Corp.

By .....

(Title)

TRANSCRIPT OF PROCEEDINGS.

Introductory Remarks by Mr. Hume.

* * * * * *

In the counterclaim, the defendant asserts that the plaintiff has infringed its method patent No. 2685536, issued on August 3, 1954, for a method for electrostatically coating articles.

It asserts that claims 1 to 6 inclusive, 8, 10 and 11 are infringed, and for the purpose of this trial, your Honor, the defendant designates claims 1, 2 and 10 as being typical which will be referred to here in the course of the proofs adduced at the trial.

The defendant further asserts that its Patent No. 2794417, issued on June 4, 1957 for apparatus for electrostatically coating articles is infringed. Here only claim 4 is involved. There are no issues of title here before the Court in this trial. That has been stipulated and there is no issues raised by either side with respect to the jurisdiction of the Court over the subject matter or over the parties in the case.

* * * * * *

TESTIMONY OF EMERY P. MILLER.

Direct Examination by Mr. Hume.

* * * * * *

Q. (By Mr. Hume.) Now, what conveyor movement rates were employed when you first adapted the No. 2 system for commercial uses as compared to the conveyor rates of the No. 1 system as represented in Exhibit 7, and when I have said No. 1 system in the last series of questions I have referred to the type represented in Exhibit No. 7.

A. Conveyor speeds would be generally the same order of magnitude.

Q. Do they—strike that, please.

Would the utilization of these features that I have just questioned you about on the basis of those adapted, or adopted, earlier to the No. 1 system as represented in Exhibit 7 affect the operativeness of the No. 2 system?

A. No, they would not, sir.

* * * * * *

TESTIMONY OF WILLIAM J. STELLMAN.

* * * * * *

Cross-Examination by Mr. Meroni.

* * * * * *

Q. Well, I call your attention to Column 3, Lines 41, 42, 43, and 44 of Patent Defendant's Exhibit 4.

A. I am referring now to my copy of amendment C which I show, I believe, the change which you just quoted.

Q. You know that change appears in the patent at the point I have designated here as Column 3 beginning around Line 40. And you are free to look at the file history, sir.

The Court: Exhibit 6.

Q. 6.

A. I believe the sentence beginning on Line 41, Column 3 of the Patent Exhibit 4 was added by the amendment C which was filed, if I remember, on August 21, 1956.

Q. I believe there is an admission in this case that that is the first time that language like that ever appeared in that case. Do you disagree with that?

A. No, I don't disagree with that.

Q. Whose idea or brainstorm was it to put in that thought in that case?

A. That arose at my interview with Mr. Mitchell on July 26, 1956, I believe.

Q. Well, without getting into any hearsay, you say that the first time it came up was—

A. (Interposing.) July 24th.

Q. (Continuing.) —at the time of your interview with Mr. Mitchell, is that right, sir?

A. That is correct. The date of that interview was July 24th.

Q. July 24th?

A. Yes.

Q. Did the client ever suggest that language to you?

A. No, that arose at the interview, as I said, with Mr. Mitchell.

Q. Well, how, then, could you ascertain that the needles were sufficiently close together to cause the coated material to bridge the spaces without consulting the client? How did you know that would happen?

A. I think it is obvious from the drawings.

Q. Will you point out in the patent itself any language describing what is in the drawings that says that the needles are sufficiently close together so as to cause the coating material to bridge the spaces therebetween other than this language that you put in there by the amendment?

A. I don't recall word for word everything that is in the patent, Mr. Meroni, but I do believe that the patent describes the apparatus, figures 5 and 6, being needles clamped between plates, and it appears obvious from looking at Figures 5 and 6 that the needles are practically in contact.

Mr. Meroni: I move to strike the last part of the answer as what is obvious, that is perfectly obvious.

The Court: Will you read the question?

(The last preceding question was read by the Reporter.)

The Court: The motion will be overruled.

Q. Did you know at that time how close together they had to be in order to accomplish that result?

A. No. I have never made an experiment to determine how far apart you could move them to break the bridge.

Q. Do you know as of this day even how close together they have to be in order to accomplish that result?

A. No. I can merely state if they are as close together as shown in the drawings, the result would naturally occur.

Mr. Meroni: I move to strike the last part of the answer. I asked him if he knew as of this day and then he volunteered some information that is not called for in the question.

The Court: The motion will be overruled.

* * * * *

Q. Now, in drawing up that language in this claim you said here, "including said feeding means for distributing coating material to an extended atomizing zone where it is formed into a plurality of space points from which atomization takes place." Did you refer to the needles there in so describing those points?

A. Well, my understanding of that language, at least my intent, was that it, that the description in the claim of the points from which atomization takes place is referring to location.

Q. Position of the location where atomization takes place. Well, in the actual device, figures 5 and 6, the points are the tips of the needles, are they not?

A. Not as I understand it. The points, the needles have points, obviously. The needles are covered with coating material. The point from which atomization takes place would be attained about the points of the needles but, of

course, would be separated, then, by the thickness of the coating material.

Q. But those points would also be fixed by the needle points, would they not?

A. The points from which atomization takes place?

Q. Yes.

A. Yes, I believe they would be.

* * * * *

TESTIMONY OF EDWIN M. RANSBURG.

Direct Examination by Mr. William.

* * * * *

Q. Mr. Ransburg, will you please refer to Plaintiff's Exhibit XXXX which has been received in evidence in this case, and state whether or not you were familiar with the fact and were aware of the fact that that letter to AVCO Manufacturing Company, dated January 18, 1954, was mailed to that company by the defendant at about that date?

A. It was.

Q. On whose authorization?

A. I authorized it.

Q. And with particular reference to the last page of Exhibit XXXX, which bears the designation "Exhibit B," and which lists the numbers of two patents and the numbers of three patent applications, will you state what the occasion was for preparing Exhibit B and attaching it to that letter?

A. It is our understanding this was at Mr. Redfield's of Crosley's request that they be listed.

Q. What was Mr. Redfield's connection with the Crosley Division of AVCO Manufacturing Corporation?

A. I think he was chief patent counsel.

Q. And will you refer now to the last paragraph of this letter which is Plaintiff's Exhibit XXXX which starts with the words "the first whereas clause is rewritten as follows:"? Now, that whereas clause refers to what? In other words, where does that appear or where did it appear at the time this letter was written?

A. What do you mean "where did it appear?"

Q. Was it a part of any agreement or agreement form with Crosley?

A. Well, it would be the first whereas clause in the printed form of the agreement for electrospray, the No. 2 process.

Q. This first paragraph of Plaintiff's Exhibit XXXX was a modification of that whereas clause, then, was it?

A. Yes.

Q. What was the origin of the whereas clause which is quoted in the first paragraph of Plaintiff's Exhibit, Exhibit XXXX?

A. The basic whereas clause was out of the printed contract and was completely modified but inadvertently modified not as much as it should have been.

Q. When was it first brought to your attention that the whereas clause that is set forth in the first paragraph of Plaintiff's Exhibit XXXX recited in substance that the patent numbers of the application numbers listed in Exhibit B applied to methods and apparatus used in electrostatically depositing liquid spray particles formed by airless atomization?

Mr. Meroni: Objected to as leading. There is nothing in this record to indicate it was ever brought to his attention.

Mr. Gilliom: I will withdraw the question, then.

Q. (By Mr. Gilliom.) Was it ever brought to your attention, Mr. Ransburg, subsequent to the writing and mailing of Plaintiff's Exhibit XXXX, that the whereas

clause contained in the first paragraph of that exhibit stated in substance that the patent numbers of the application numbers listed in Exhibit B applied to methods and apparatus used in electrostatically depositing liquid spray particles formed by airless atomization?

A. It was brought to my attention.

Q. When was it first brought to your attention?

A. During discovery proceedings in this case.

Q. In this proceeding in which you are now testifying?

A. Yes.

(The defendant, for purposes of identification, handed the Reporter a certain document for marking and which was by said Reporter marked Defendant's Exhibit 41 in three pages.)

Q. (By Mr. Gilliom.) After you learned of the reference in the whereas clause to which I have referred in the previous question, did you give instructions to anyone in your organization to communicate further with AVCO Manufacturing Corporation on that subject?

A. I did.

Q. Will you please examine what has been designated as Defendant's Exhibit 41 and state briefly for the purposes of identification what that is?

* * * * *

A. These are copies of two letters by us to AVCO and one letter from them to us.

* * * * *

PLAINTIFF'S EXHIBIT KKKK.

DEPOSITION OF EDWIN K. RANSBURG.

* * * * * *

Q. Now, referring to your Sfarkey, et al. Patent No. 2685536 in suit, a copy of which is before you as Exhibit A * * *

A. (Interposing.) Yes.

* * * * * *

PLAINTIFF'S EXHIBIT LLLLL.

DEPOSITION OF BURKE B. ROCHE.

Direct Exdmination by Mr. Hume.

* * * * * *

Q. Now, Mr. Roche, you have read from form 439 from Exhibit D to the complaint which does provide for a set of conditions involving the supplying of equipment, but didn't you recognize that that was an alternative form that could be selected by a prospective licensee and it stood as an alternative to the form Exhibit C, namely 440, that is, Exhibit C to the complaint, in which the alternative form of license was afforded, in which no equipment was to be provided? Didn't you recognize that?

A. Well, this Exhibit C just mentions the terms and it doesn't refer, as I recall here, it doesn't refer to equipment. It just mentions something about the fees and then that there would be periodic fees, depending upon the amount of coating used and it also says there will be an initial fee also, but it doesn't specifically refer to the equipment but what Ransburg does, from what I have always heard from all of the people that work for Binks and other people that I have talked to, that usually involves the leasing of equipment.

Q. Is it possible that you have authorized the bringing of this complaint on a mistake of the understanding of the facts?

A. No, it is not possible. The license that was offered us by Mr. Edwin Ransburg was not acceptable to us.

Q. Now why wasn't it acceptable to you anyway?

A. Because we are in the business of manufacturing and selling equipment. When we sell equipment, the title passes, and we are not interested in getting into any sort of an arrangement where we have to tie our customers up with continuous royalty payments or these periodic payments that go on for years.

We don't conduct our business that way. We never have, and it is a very cumbersome process, to such an extent that the Ransburg Company, by operating in this way, has managed to get a monopoly on the electrostatic coating business so far as the airless method is concerned.

They are preventing us from using our method and the way we used to conduct our business. The last letter we received from Mr. Edwin Ransburg was entirely unacceptable to us.

We are not interested in continuous royalty payments.

Q. How could Binks be hurt through the sale of its equipment to purchasers who would be licensees of Ransburg, licensees of Ransburg without the requirement of obtaining equipment from Ransburg?

A. How would Binks be hurt?

Q. Yes.

A. Well, I don't think that it would certainly be to our advantage to have to be licensed, to have our customers licensed by Ransburg under those existing arrangements that we would have to adhere to. As a matter of business policy, we don't want to do our business that way.

PLAINTIFF'S EXHIBIT NNNN.

DEPOSITION OF MILTON F. PLEVA.

Q. Would you say that in the majority of instances, if not in all of them, the customer has not been shown enough interest to ask what patents covered the equipment?

A. I would think that is a reasonably true statement, yes.

Q. In other words, they wanted the equipment so bad that they didn't care what the license agreement provided in the way of patents, is that right?

A. Well, of course, you are asking me now for an opinion. I don't know what the man feels, but I would say this, that I think the result is about what you have outlined because normally the man that is down there is not an attorney and not interested in those things.

Normally, he is a production man, he sees here a tool that he thinks he wants to use on his line, and I don't think the average man that comes down there, as a rule, has asked us all about our patents.

I think that in the average situation the man feels he knows there is an agreement involved and that if he's interested and wants to talk about that we certainly will go all through that with him in detail. I think the average guy, the production man, would probably say, "Well, when this comes into our factory we will turn this over to the legal department—we pay those guys—and let them look at it."

Q. But you have made it plain to these people that if they want the equipment they've got to take the license?

A. Oh, yes, sir.

Q. That they can't get the equipment without the license?

A. Yes, that's right, that's right.

• • • • •

PLAINTIFF'S EXHIBIT OOOO.

• • • • •

WILLIAM A. DARRAH, called as a witness in behalf of the plaintiff herein, having been first duly sworn, was examined and testified as follows:

• • • • •

Cross-Examination by Mr. Hume.

By Mr. Hume: Q. Do you recall, Mr. Darrah, whether or not you stated to the Patent Office in connection with the De Vars patent to which I have directed your attention the following:

> "Applicant has therefore modified claims which have been rejected on De Vars by bringing out the feature of the surrounding insulation. This factor makes the difference between an operative and inoperative device as far as producing the results obtained by the applicant is concerned."

Do you have any recollection of making a statement of that kind?

A. I have prosecuted over a hundred patents and I can't go back thirty years and tell you about that one.

• • • • •

PLAINTIFF'S EXHIBIT ZZ-1.

Serial No. 3448

3-21-49

Ransburg Atom Spray Process Agreement.

This Agreement, entered into this 21st day of March, 1949, by and between Ransburg Electro-Coating Corp., an Indiana corporation, having its principal place of business at Indianapolis, Indiana, hereinafter called "Ransburg", and Enameled Steel & Sign Company, Chicago, Illinois hereinafter called "User", Witnesseth That:

Whereas, Ransburg is the owner of, or otherwise has the right to grant licenses under, certain inventions, letters patent of the United States or applications for such letters patent pertaining to and covering methods and apparatus used in electrostatic atomization and electrostatic deposition of liquid coating material, the process so used being referred to as the Atom Spray Process, has acquired much engineering data and experience pertaining to said Process, has designed special equipment therefor and is conducting research in that field; and

Whereas, User desires to use said Process and in so doing to avail itself of the experience gained by Ransburg in this field.

Now, therefore, it is mutually agreed as follows:

1. License: In consideration of the payment by User of the fees herein provided, Ransburg hereby grants to User, subject to and in accordance with all of the terms and conditions of this Agreement and while the same is in effect, the right to use said Atom Spray Process in the deposition of liquid coating with the Equipment furnished by Ransburg herein below described, with one Unit, as

shown in Ransburg's Drawing No. 132127 subject to such changes therein and such further specifications as Ransburg may prescribe, for electrostatically spraying acoustical pans but said right shall not include the use of said Process in the manufacture of abrasive articles, flock-coated articles or articles coated with fiber-shaped particles.

2. Equipment: Ransburg will furnish User two voltage packs and electrical controls, an atom spray device and insulating support therefor and high voltage lead-in means, which will be shipped prepaid to User's plant at Chicago, Illinois, upon request of User. Ransburg will supply replacements, without charge, of any defective parts of said two voltage packs, electrical controls and high voltage lead-in means, except where the defect results from improper use or operation, or negligence of User, and provided User returns such defective parts to Ransburg within thirty days after they become defective. User shall furnish all labor, materials and equipment necessary for the use of said Process except the Equipment to be furnished by Ransburg in accordance with this paragraph.

3. Supervision: Ransburg will furnish supervision necessary to placing said Equipment in readiness for operation. Should Ransburg's supervisor make more than one trip to the plant of User or be delayed there for any cause not chargeable to Ransburg, then for each day of such trip or trips or such delay, User shall pay Ransburg Seventy-Five Dollars and any necessary transportation expense incurred thereby.

4. Conversion: Ransburg will grant, upon written request by User, the right to use said Process other than as described in Paragraph 1 unless requested use involves unsafe practices or impractical conditions in Ransburg's opinion or is in conflict with the policies or commitments

of Ransburg. Such grant will be valid only when written and signed by Ransburg.

5. Liability: User agrees that Ransburg shall not be liable to User for any claim resulting from the use, operation or condition of the Equipment furnished by Ransburg. User further agrees to reimburse Ransburg for any loss which may be sustained as a result of any liability to third parties for any claim resulting from the use, operation or condition of the Equipment furnished by Ransburg, while said Equipment is in the possession or custody of User.

6. Use of Equipment: User agrees to follow Ransburg's safety recommendations, and to maintain said Equipment in as good repair as when installed, ordinary wear and tear from proper use and operation alone excepted. User agrees that it shall not use or operate said Equipment with any of the parts or safety devices removed, and to reimburse Ransburg for loss of or damage to said Equipment while in User's possession or custody.

7. Title: Title to said Equipment shall at all times remain in Ransburg and said Equipment shall remain personal property regardless of how it is affixed to the realty. Ransburg shall have at all times, during business hours, the right to enter User's premises for the purpose of determining whether said Equipment and said Process are being used as herein provided. User shall not have the right to (1) lease or grant the right to use said Equipment to any person, firm or corporation, (2) remove it from the plant to which it is delivered for installation or (3) use it for any purpose or in any manner other than as herein provided. Upon termination of this Agreement, User agrees to deliver said Equipment, freight prepaid to Indianapolis, Indiana, to Ransburg in as good condition as when installed, ordinary wear and tear incident to its proper use and operation alone excepted.

8. Performance: The performance of Ransburg's obli-

gations hereunder is, subject to strikes and lockouts, whether in Ransburg's organization or elsewhere, and to accidents, fire, delays in manufacture or transportation, acts of God, embargoes or any Governmental action as well as any causes for postponement or non-performance over which Ransburg has no control. Any of said causes shall absolve Ransburg from all liability to User for delay or non-performance under the terms hereof.

9. Period of Agreement and Termination: Unless terminated as hereinafter provided, this Agreement shall remain in full force and effect for five years from the date thereof and shall automatically renew itself for successive five-year periods upon the same terms and conditions as those set forth herein.

Either party shall have the right to terminate this Agreement at any time upon thirty days' written notice to the other party. As a condition precedent to User's right to terminate this agreement, User shall fulfill its obligations hereunder and return said Equipment prepaid to Ransburg within thirty days after notification of such termination, in as good condition as when installed, ordinary wear and tear from proper use and operation alone excepted.

In the event User shall fail to perform any of the conditions or obligations of this Agreement, and such failure shall continue or recur after written notice thereof from Ransburg, Ransburg may (without prejudice to its rights to recover any amounts owing by User as herein provided or any damages for breach of this Agreement) terminate this Agreement and take possession of said Equipment, and for that purpose permission is hereby given Ransburg, or any of its agents, to enter any premises wherein said Equipment is located, to discover and take possession of said Equipment without notice and without being liable to any suit, action, indictment or other proceedings by User or anyone claiming under it. Any delay, concession

or indulgence on the part of Ransburg in enforcing any of its rights on any default shall not be deemed a waiver of such rights.

10. Fees: User agrees to pay to Ransburg an initial fee of Two Thousand Dollars ($2,000.00) within sixty days after date of shipment of said Equipment or thirty days after date of installation thereof, whichever occurs earlier. User further agrees to pay Ransburg, on or before the tenth day of each calendar month, during the life of this Agreement, a monthly fee of One Hundred Dollars ($100.00) plus the percentage or percentages of the cost to User of the coating material (including all its ingredients) used in said Unit during the preceding calendar month in accordance with the following schedule:

Percentage	Monthly Cost of Coating Material
10%	0 to $4,000.00
5%	$4,000.00 to $8,000.00
0	All Over $8,000.00

Monthly fees under this Agreement shall start with the date of installation of said Equipment or thirty days after date of shipment thereof from Ransburg's plant, whichever occurs earlier, and the first payment shall be made on or before the tenth day of the calendar month following. The first and last monthly fees payable under this Agreement shall be prorated according to the portion of the month for which they are payable but only to the extent of the first One Hundred Dollars ($100.00) of these fees.

In addition to the above fees, User agrees to pay, or to reimburse Ransburg if it should be obliged to pay, directly or indirectly any taxes, licenses, or fees imposed by the laws of any State, of any political subdivision, of any municipality, or of any other governmental authority by reason of the installation, possession, use or location within the state of any equipment furnished pursuant to

this Agreement. Such sums as may be due under this provision shall be paid separately or added to the invoice f · other payments as the law may require or as Ransburg may determine.

Upon request of Ransburg, User shall supply Ransburg with a written report showing the monthly quantity of coating material used in said Unit and the cost to User of said coating material. User agrees to keep permanent books of account from which the correctness of said monthly reports can be verified and agrees that such books of account shall be open to inspection by Ransburg or its duly authorized representatives at any time during User's regular business hours.

11. Technical Information: User hereby agrees to exercise reasonable precaution to treat all information relating to said Atom Spray Process or atom spray equipment as secret and confidential.

12. Assignment of Inventions: User agrees in the event that User should acquire any inventions, improvements, or letters patent, domestic or foreign, relating to electrostatic coating processes or apparatus, or products made by such processes or apparatus, from any source, User shall immediately assign and transfer the same to Ransburg.

User agrees to render to Ransburg every possible assistance in the prosecution of any applications based on such inventions, and to execute any and all documents of whatever nature or description properly required by Ransburg in the prosecution of such applications.

User shall adopt the practice of requiring its employees considered likely to make inventions relating to and/or coming within the scope of this paragraph to assign such inventions to User, to execute any and all documents of whatever nature or description required by Ransburg and User incident to obtaining patent protection for such inventions and to use their best efforts to carry out these provisions.

In the event that Ransburg does not elect to prosecute a patent application on any of the inventions submitted to Ransburg under this paragraph, User may proceed with the prosecution of a patent application for such invention, and retain all rights therein.

13. Disclosure of Techniques, Knowledge and Information: User agrees to disclose to Ransburg for Ransburg's complete understanding thereof all techniques, knowledge and information relating to the inventions or improvements referred to in Paragraph 12 herein.

14. Duration of Certain Obligations of User: User agrees that its obligations contained in Paragraphs 12 and 13 shall continue in full force and effect for a period of two (2) years after the termination of this Agreement pursuant to due notice and with or without cause.

15. Execution of Agreement: This Agreement sets forth the entire agreement and understanding between the parties as to the subject matter of this Agreement and no statements, conditions or representations, either oral or written, made by the parties, their employees or agents, including conditions or provisions appearing in any purchase order or other instrument issued by User, shall be valid or binding unless contained in a written instrument signed by both parties.

This Agreement is executed by Ransburg in quadruplicate, subject to execution by User and delivery of two executed copies thereof to Ransburg within thirty days of the date first above written; and if so executed and delivered within that time, it shall be a contract, as of said date, between the parties under the laws of the State of Indiana.

All of the rights and privileges of Ransburg hereunder shall be extended to and inure to the benefit of the successors in business or assigns of Ransburg upon User being given written notice of the assignment of this Agreement

to such successors in business or assigns and upon such successors in business or assign accepting and assuming all obligations of Ransburg hereunder in writing.

In Witness Whereof, the parties have executed this Agreement, acting herein by their respective officers duly authorized therefor.

Ransburg Electro-Coating Corp.,
By E. M. Ransburg, Vice-President,
Title

Attest:

.....

(Seal)

Enameled Steel & Sign Co.,
By C. Simmons, President,
User Title.

Attest:

.....

(Seal)

PLAINTIFF'S EXHIBIT IIII.

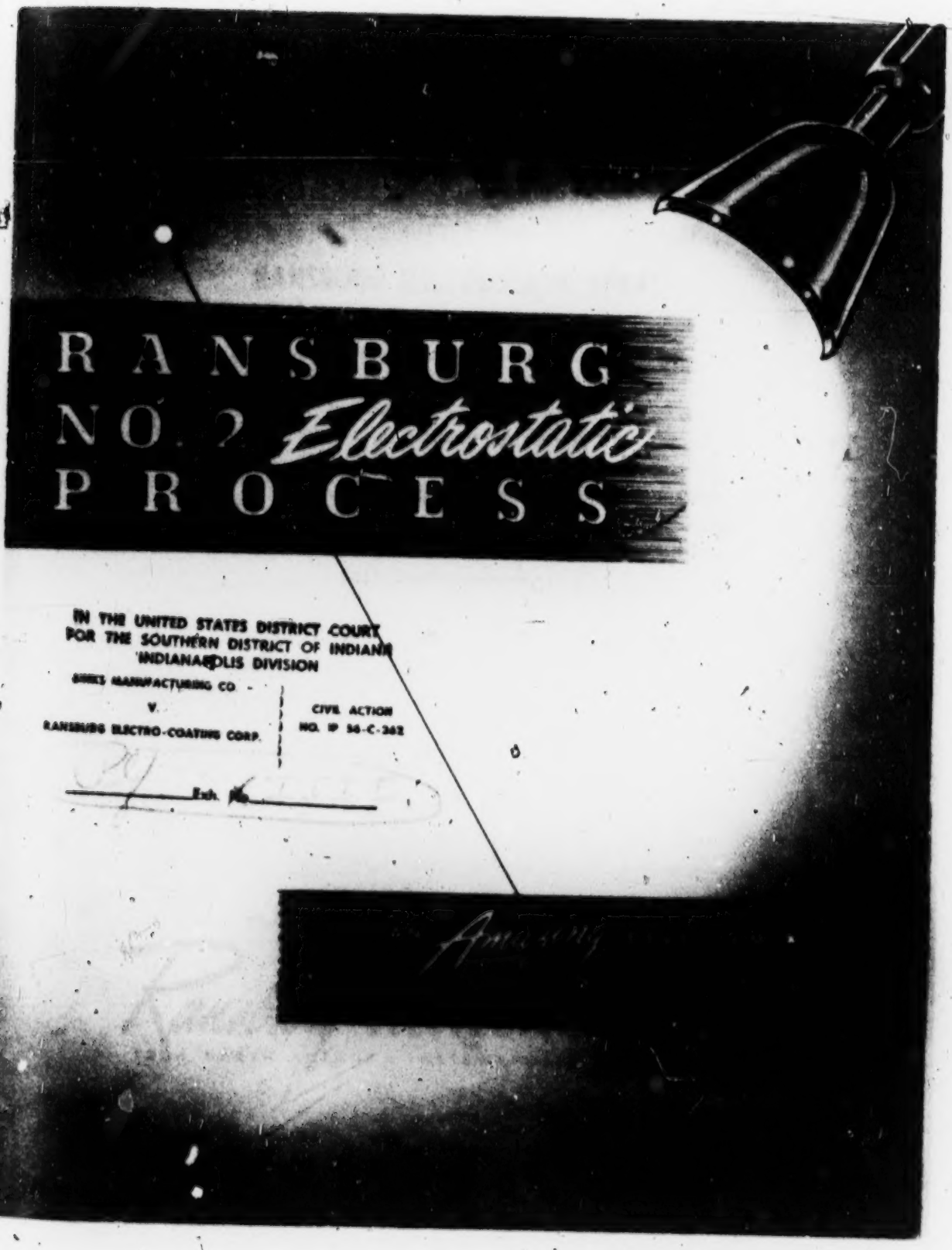

RANSBURG ELECTROSTATIC SPRAY—

using conventional automatic spray guns—is in wide use on production painting lines in factories throughout this country and abroad and is saving millions of dollars through more efficient use of paint and reduced labor. From radio tubes to refrigerators—lawn mowers to lockers—pipe to pre-fab buildings—Ransburg electrostatic spray has been accepted as the most economical method of producing high quality finishes.

Ransburg ELECTRO-COATING CORP.

1234 BARTH AVENUE · INDIANAPOLIS 7, INDIANA, U.S.A.

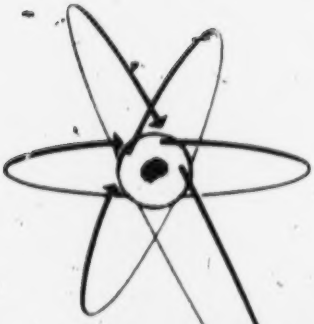

Now, 99% EFFICIENCY

is obtained on many installations with the new Ransburg No. 2 Electro-Spray Process. The No. 2 Process is a revolutionary, new development born of tireless, probing research for a better method—for the best in quality and efficiency. Based upon an entirely new concept, the No. 2 Process is the ultimate in spray painting—in most cases the efficiency is in the high nineties, and in some instances the efficiency exceeds 99%. On most production lines, the No. 2 Process will give 25% to 75% more pieces per gallon than any other spray finishing system. The increase will be much larger over conventional hand spray methods . . .

AND IN ALL CASES, THERE IS NO OVERSPRAY TO BE EXHAUSTED!

Here's the

and

of the

Ransburg NO. 2 PROCESS

The Ransburg No. 2 Electro-Spray Process embodies an entirely new method of atomizing liquid coatings —Electrostatic Atomization.

In this Process, the article to be coated is carried by the conveyor past a radically new type spray "gun." The gun consists essentially of a hollow, cone-shaped head. Coating material is metered at a constant rate to the apex of the head, and rotation of the head spreads the material uniformly over its inner surface, causing the material to flow evenly to the outer edge.

A source of electrostatic high potential, having one terminal grounded and its other terminal connected to the head, creates a strong electrostatic field between the head and the article to be coated, which is grounded by the conveyor. The force of this field transforms the material into a spray of fine, charged particles and creates an irresistible attraction that pulls the spray particles to the grounded article. This accounts for complete electrostatic deposition.

Major variables such as atomizing air pressure and overspray exhaust air currents have been eliminated, and variations in spray pattern and fluid delivery have been greatly reduced. Thus, the No. 2 Process removes all dependence of spray painting upon the art and skill of the operator and the hand spray man. It permits positive duplication of results, and its ease of

set-up and operation makes it truly "push-button" painting.

All of the paint leaving the spray head is deposited, and there is no overspray to be exhausted. No water-washed walls for collection or removal of wasted paint are necessary. When the shape of the article or the method of conveying does not permit complete deposition on the part; a backboard is employed as a simulated article.

No compressed air is used in the entire system; so the waste of paint inherent with air atomization does not exist. Ventilation of the area for control of solvent vapor is all that is required. This practically perfect painting efficiency has never before been approached on a spray painting production line.

In addition to the large paint savings, substantial economies are also effected by reducing air make-up, exhaust system heat loss, and clean-up maintenance.

By combining electrostatic atomization and electrostatic deposition, the No. 2 Process makes possible the ultimate in spray painting. High production, conveyorized, automatic painting is ushered into a new era by this Process.

In the following pages, a few of the initial applications of the No. 2 Process are shown and described. Their production results are proof of the almost fantastic coating efficiencies obtained with this Process.

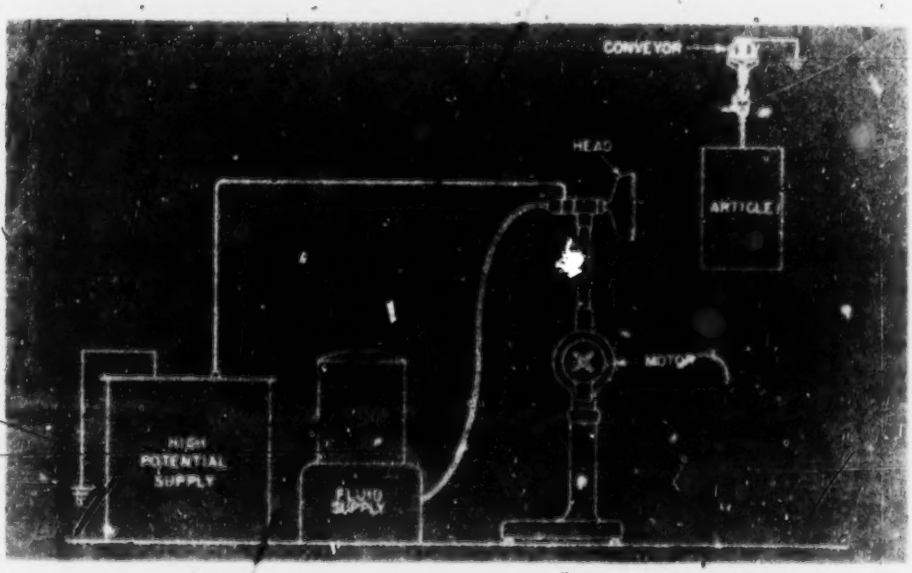

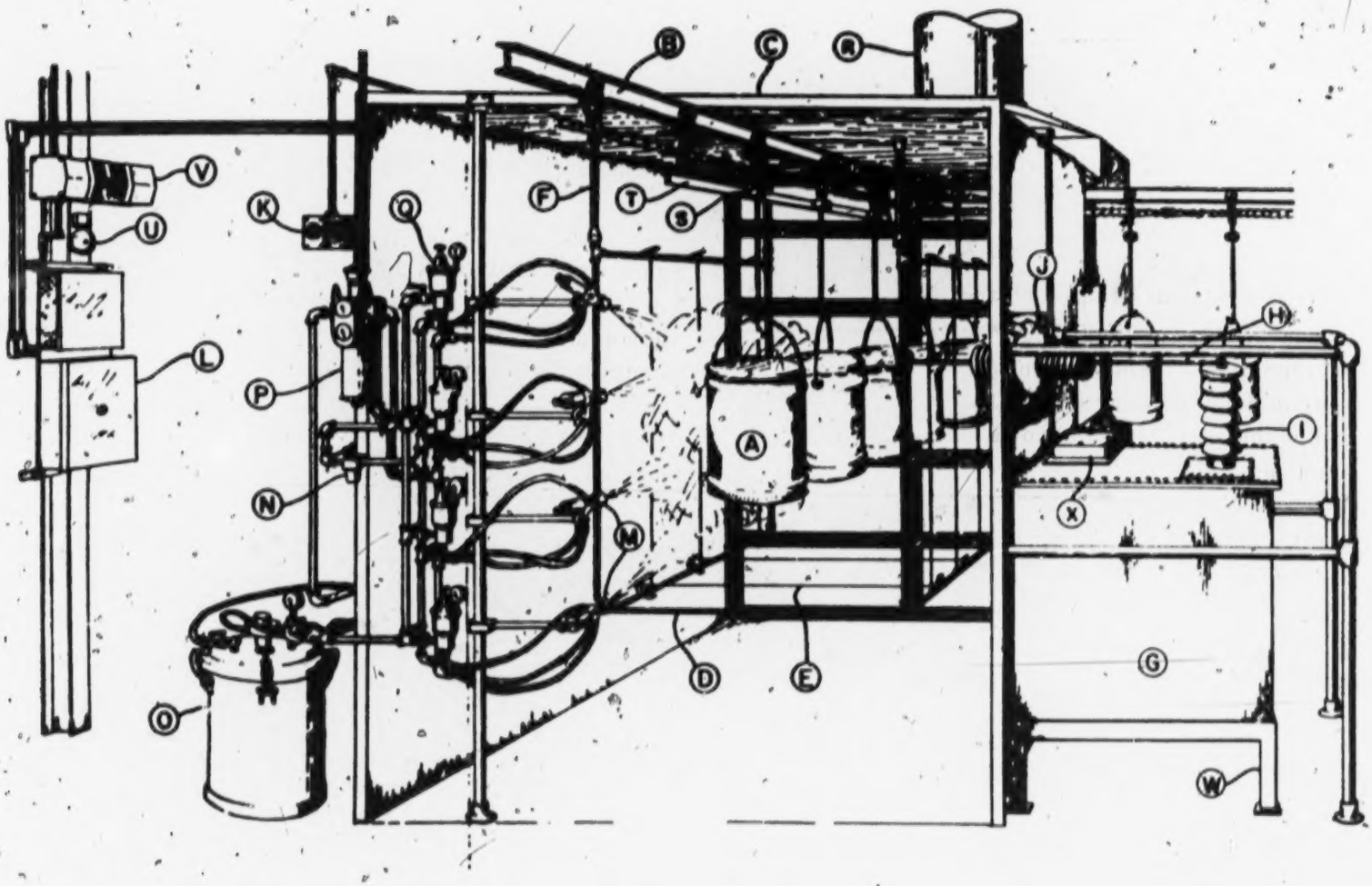

Fig. 1
Typical Installation
Employing Overhead Monorail Conveyor

DEFENDANT'S EXHIBIT NO. 7.

4660

55-51

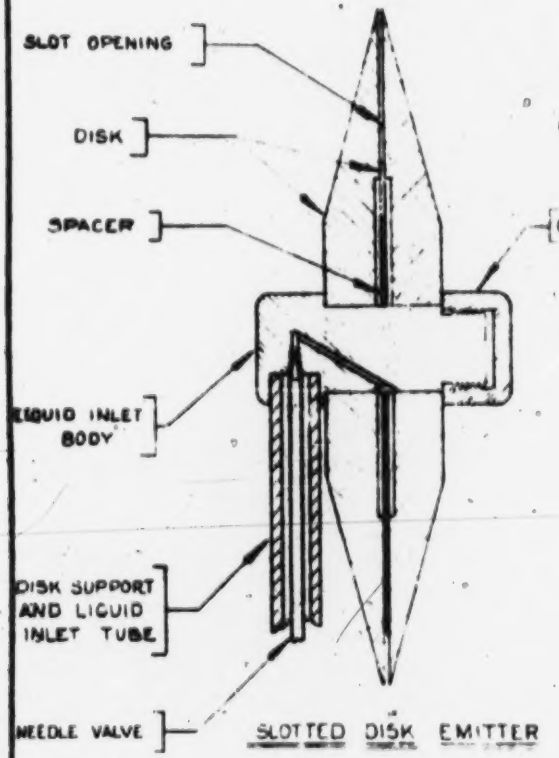

SLOTTED DISK EMITTER

FIG. 1

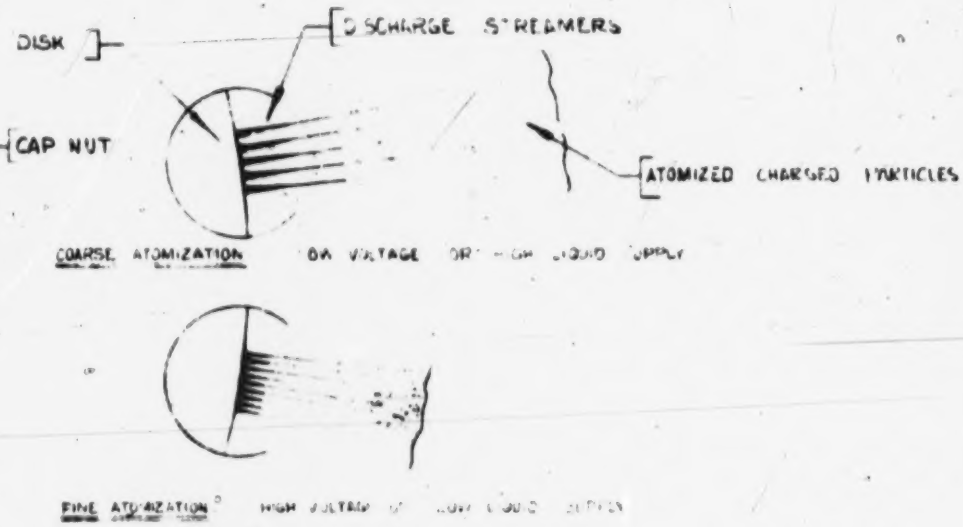

FIG. 2

IN THE UNITED STATES DISTRICT COURT.
* * (Caption—56-C-262) * *

STIPULATION.

Whereas, this suit was filed on October 11, 1956, and

Whereas, subsequent thereto, on June 4, 1957, United States Letters Patent No. 2,794,417 issued to defendant, Ransburg Electro-Coating Corp., for Apparatus for Electrostatically Coating Articles; and

Whereas, plaintiff, Binks Manufacturing Company, has represented to defendant that plaintiff, since June 4, 1957, has used the emitter and its associated equipment constituting the electrostatic coating unit heretofore demonstrated to representatives of defendant at plaintiff's plant on or about December, 1956; and

Whereas, defendant has represented to plaintiff that it is defendant's position that such use constitutes an Infringement of at least claim 4 of said Letters Patent No. 2,794,417,

It Is Hereby Stipulated by and between the parties to the above identified cause, through their respective counsel, this Honorable Court consenting, as follows:

1. Defendant shall have the right to supplement its counterclaim to include in this suit its United States Letters Patent No. 2,794,417, and for that purpose shall have the right to file the supplemental counter claim attached hereto.

2. All previous proceedings, including pleadings, Interrogatories and depositions, filed or taken in connection with this case shall be used to the extent applicable with respect to said supplemental counterclaim with the same force and effect as if said Letters Patent No. 2,794,417 had been initially included in defendant's original counterclaim.

3. Plaintiff shall have thirty (30) days from the date of filing of said supplemental counterclaim in which to reply thereto, or otherwise plead.

Byron, Hume, Groen & Clement,
38 South Dearborn Street,
Chicago 3, Illinois,
Attorneys for Defendant.

Hill, Sherman, Meroni, Gross & Simpson,
/s/ Charles F. Meroni,
53 West Jackson Boulevard,
Chicago 4, Illinois,
Attorneys for Plaintiff.

Chicago, Illinois.
Dated: May 15, 1958.

IN THE UNITED STATES DISTRICT COURT.
* * (Caption—56-C-262) * *

STIPULATION UNDER RULE 42 (b).

It is hereby stipulated between the parties, through their counsel, this Honorable Court consenting, that:

Pursuant to Rule 42(b) of the Federal Rules of Civil Procedure this Court may order a separate trial or hearing on the amount of damages only and all other issues effecting liability will be tried during the trial commencing on December 15, 1958.

Otto R. Krause.
Attorney for Plaintiff,

Howard W. Clement,
Attorney for Defendant.

Date: 11-25-58.

IN THE UNITED STATES DISTRICT COURT.
* * (Caption—56-C-262) * *

STIPULATION REGARDING PLAINTIFF'S USE OF ACCUSED APPARATUS.

Plaintiff, Binks Manufacturing Company, through its counsel, hereby stipulates that since June 4, 1957, and in the United States it has used electrostatic spray-coating apparatus including its SK-661 emitter under the conditions and with the results set forth in its answers to Defendant's Interrogatories Nos. 2 through 7, 165 through 169, 173, 174, 175, 177, 178, and 180.

Charles F. Meroni /s/
Attorney for Plaintiff.

December 16, 1958.

467

Oct. 26, 1937. A. F. MESTON 2,097,233

ELECTRICAL DEPOSITION IN PATTERN FORM

Filed March 31, 1934 5 Sheets-Sheet 1

Fig. 1.

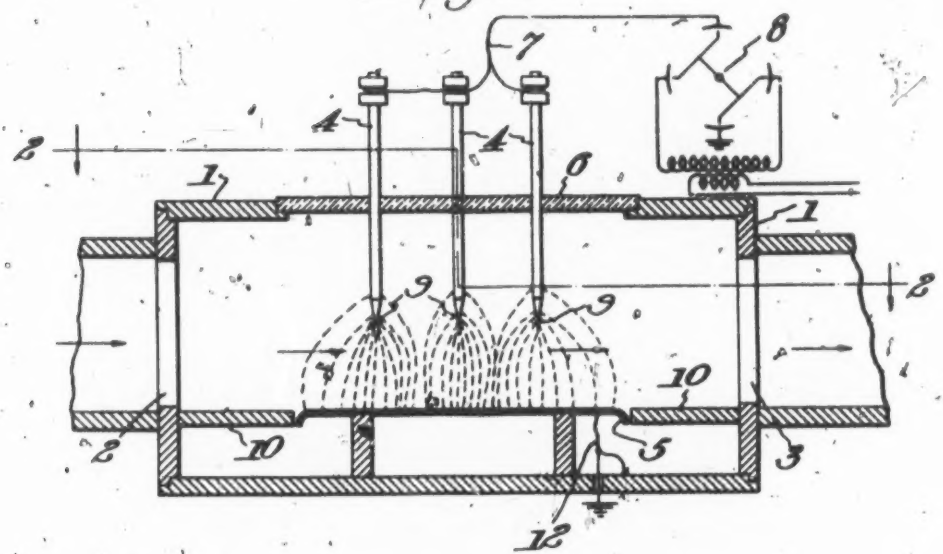

Fig. 2.

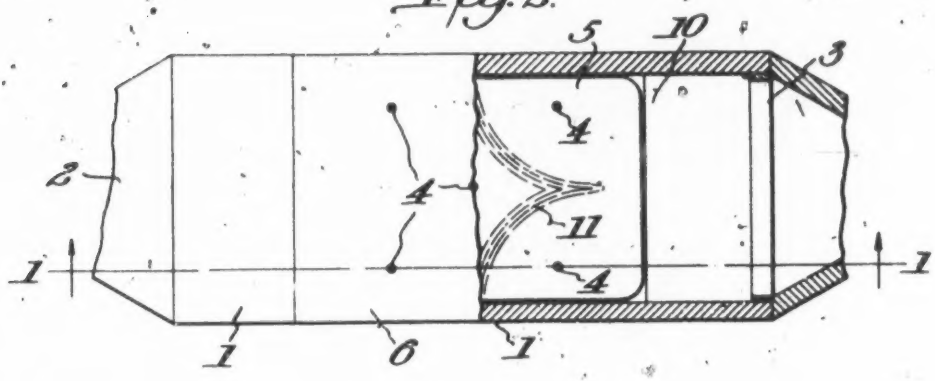

Inventor:
Archibald F. Meston

By Potter, Pierce & Schaffler
Attorneys.

469

Oct. 26, 1937. A. F. MESTON 2,097,233

ELECTRICAL DEPOSITION IN PATTERN FORM

Filed March 31, 1934 5 Sheets-Sheet 2

Fig. 3.

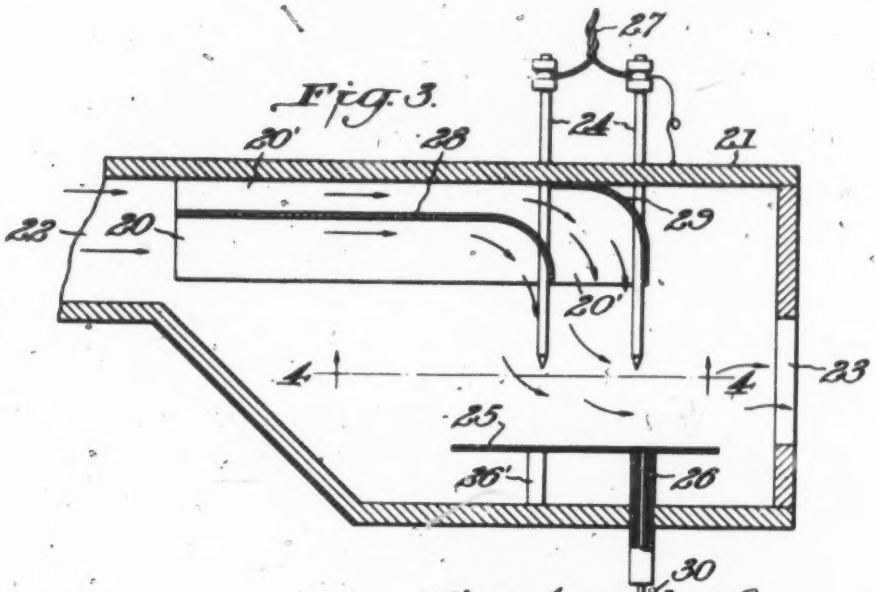

Fig. 4.

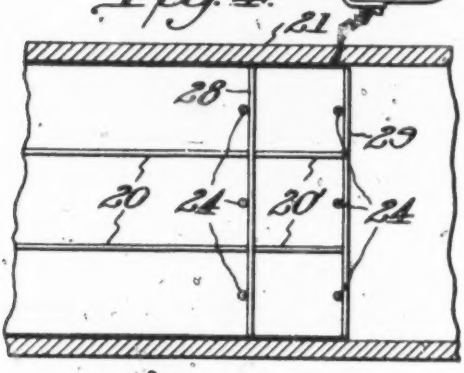

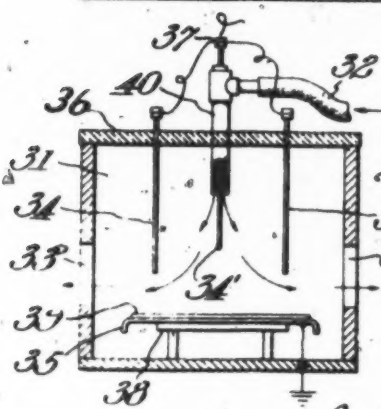

Fig. 5.

Inventor:
Archibald F. Meston

By Potts, Pierce & Scheffler
Attorneys.

Oct. 26, 1937. A. F. MESTON 2,097,233

ELECTRICAL DEPOSITION IN PATTERN FORM

Filed March 31, 1934 5 Sheets-Sheet 3

Fig. 6.

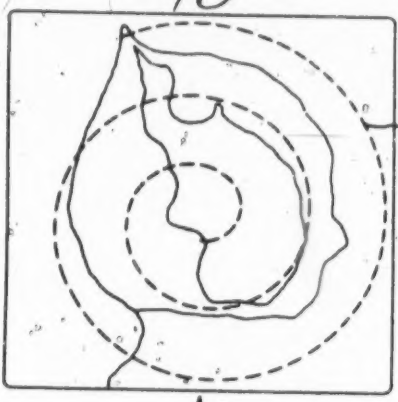

Fig. 7.

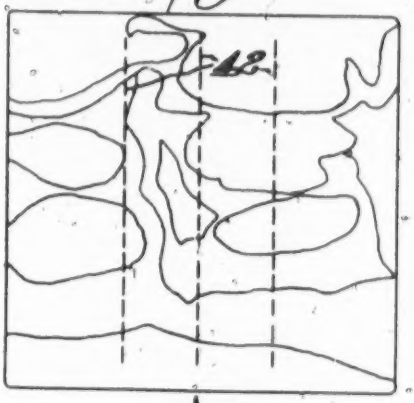

Fig. 8.

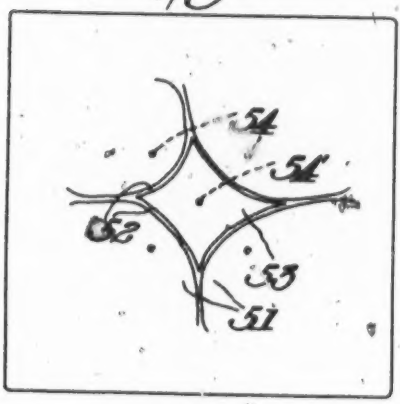

Fig. 9.

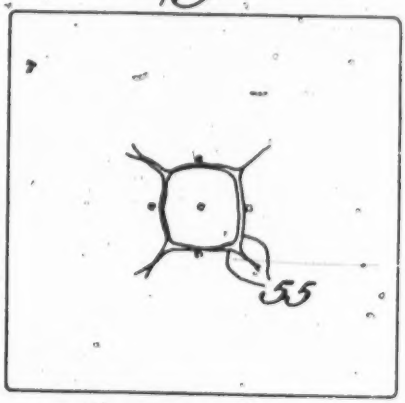

Fig. 10.

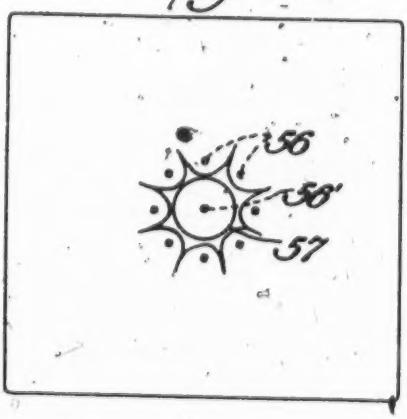

Fig. 11.

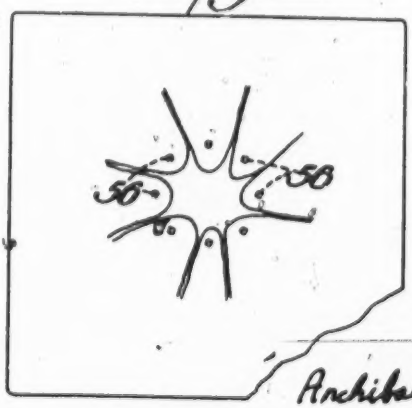

Inventor:
Archibald F. Meston
By Potter, Pierce & Schaffler
Attorneys

Oct. 26, 1937. A. F. MESTON 2,097,233

ELECTRICAL DEPOSITION IN PATTERN FORM

Filed March 31, 1934 5 Sheets-Sheet 4

Fig. 12.

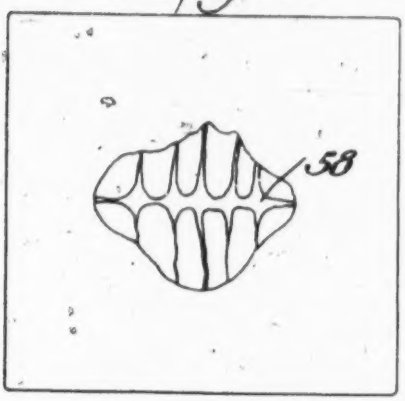

Fig. 13.

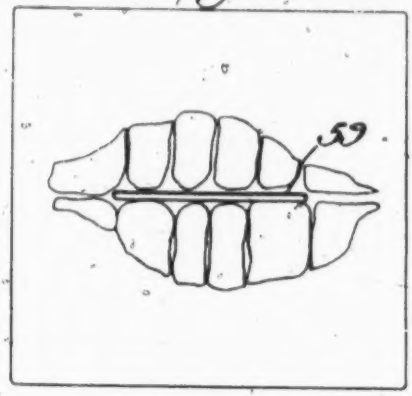

Fig. 14.

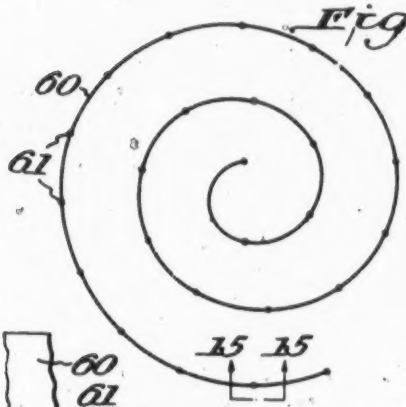

Fig. 15.

Fig. 17.

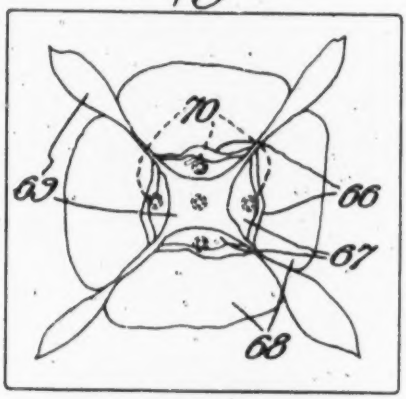

Fig. 16.

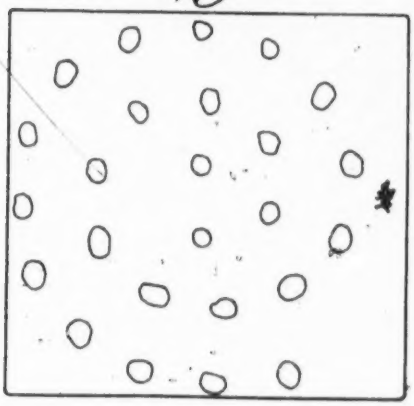

Fig. 18.

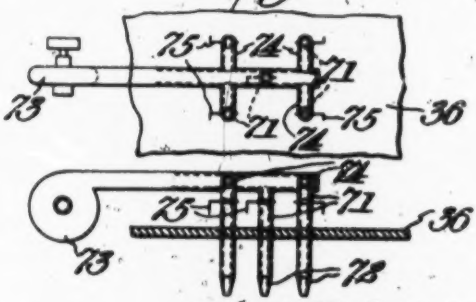

Fig. 19. Inventor:
Archibald F. Meston

By Potter, Pierce & Scheffler
Attorneys.

Oct. 26, 1937. A. F. MESTON 2,097,233

ELECTRICAL DEPOSITION IN PATTERN FORM

Filed March 31, 1934 5 Sheets-Sheet 5

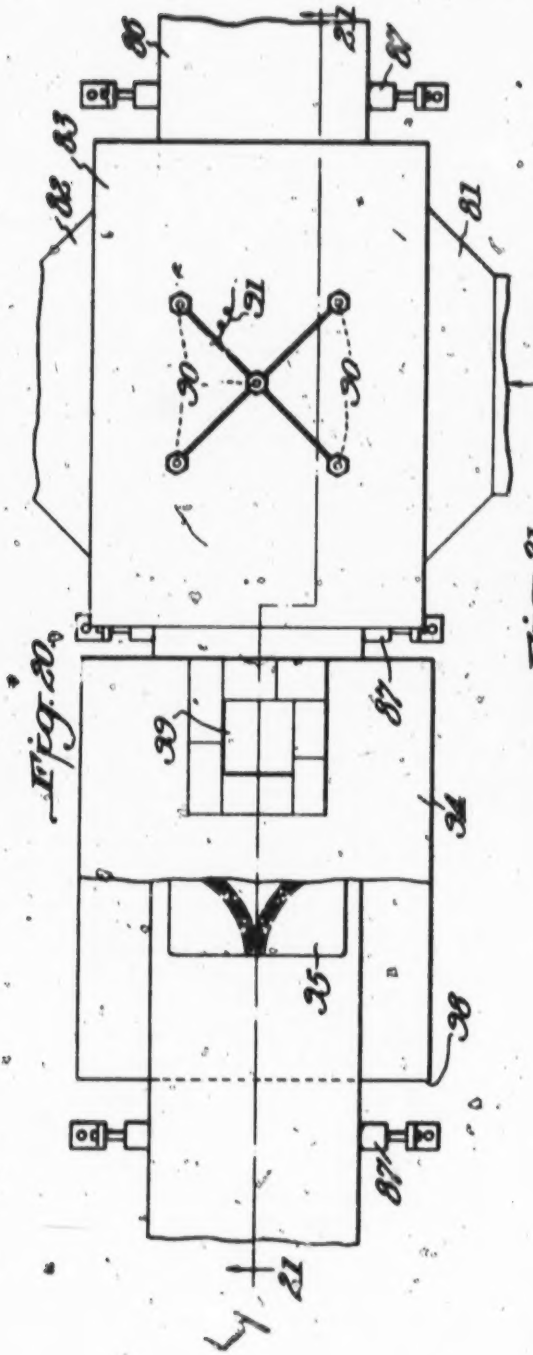

Fig. 20.

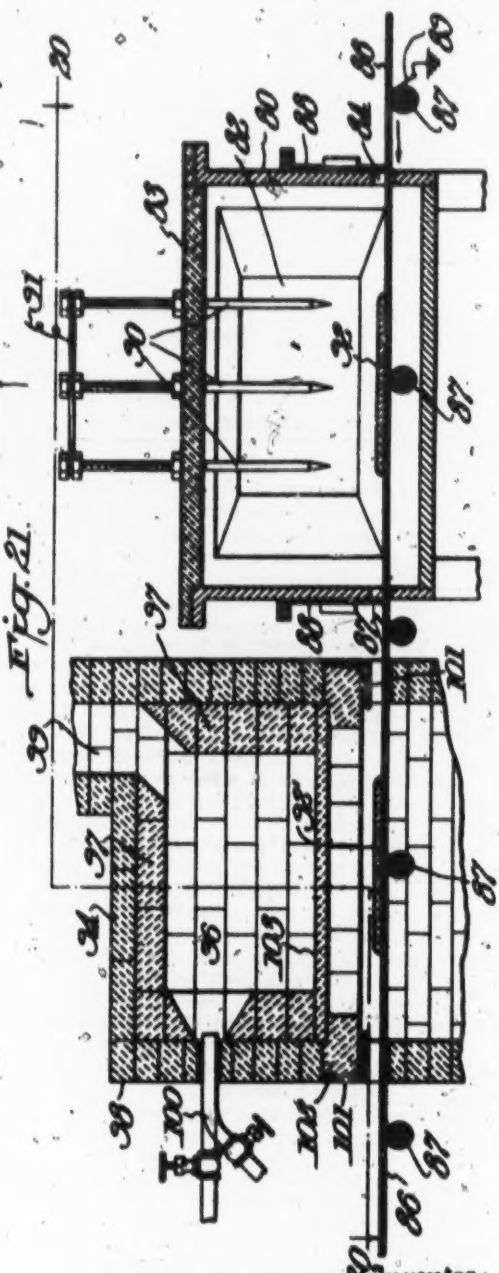

Fig. 21.

Inventor:
Archibald F. Meston
by Potter, Evans & Scheffler
Attorneys

Patented Oct. 26, 1937

2,097,233

UNITED STATES PATENT OFFICE

2,097,233

ELECTRICAL DEPOSITION IN PATTERN FORM

Archibald F. Marston, Middlesex Borough, N. J., assignor to Research Corporation, New York, N. Y., a corporation of New York

Application March 31, 1934, Serial No. 718,891

10 Claims. (Cl. 41—1)

This invention has to do with the electrical deposition of comminuted material in the form of patterns. It provides apparatus for coating and/or decorating a surface with material which is conveyed to the vicinity of the surface as a finely divided suspension and is then directly deposited upon the surface in pattern form. As examples, an electric field can be used to deposit metal dusts, colored sands and enamels or dyes upon a surface in pattern form; and the material deposited can then be attached to or incorporated into the surface with adhesives or by heating or chemical action without manual arrangement.

The invention is of use in industries having problems in decorating surfaces and especially where the decorative coatings are made of materials supplied in finely divided form, such as those resulting from dry grinding, subliming, condensing or spraying operations. For instance, it permits an air floated powder immediately after leaving a classifier to be laid down in pattern form on a surface to be decorated, thus making use of the collection of the powder and its incorporation into a paste or paint before deposition. It also permits surfaces of extended area to be coated in pleasing outlines without resorting to stencils or other means which require manual operation and are awkward to handle in large sizes.

It is well known that free electric charges tend to move when in an electric field, and if the charges are attached to particles which are free to move, such as dust particles suspended in air, the particles will be moved with the electric charges towards the boundaries of the electric field. The phenomenon is especially effective when the electric field is of high intensity and of constant polarity. Electric fields are commonly described in terms of so-called lines of force and accepted characteristics of these lines of force are that they leave a conductor perpendicular to the surface; that they repel one another and therefore are distributed as evenly as electrode spacings and dielectric conditions permit; and that they will not enter narrow openings between conductors, but will terminate on the surfaces adjacent such openings as is illustrated in the use of a Faraday "cage". Advantage is taken of these characteristics in the present invention. By altering the contour of the electrode boundaries, the direction and concentration of the electric lines of force can be altered. This means that the direction and velocities of charged particles moving in the electric field are altered, making possible their deposition in patterned outline or decorative figures.

The effects resulting from changing the boundary of an electrode become very pronounced when the electrode comprises portions of great curvature, such as ridges and points which project towards the opposing electrode. When a high voltage difference is impressed across the dielectric between opposing electrodes, one or both of which have boundaries with such projecting portions, very high concentrations of lines of force exist in the vicinity of, and terminate on, the projections. If the dielectric is a gaseous fluid, the high electric stresses to which the gas is subjected in these regions will cause it to become ionized and streams of free charges (associated with ions and electrons) will move rapidly from (or to) the projections on the electrodes and set up movements in the gas known as "electric wind."

The changes that can be effected in an electric field in a gaseous dielectric in order to produce changes in the deposition of particles are, therefore: changes in the concentration and direction of the lines of force, changes which affect the production and distribution of free electric charges, and changes in gas movements due to electric wind. Of course, changes in the velocity of the gas passing through the electric field which may be brought about by the operation of a mechanical fan will also affect the deposition of particles carried into the electric field by the gas stream.

The foregoing discussion of the principles made use of in the present invention in terms of present day concepts is presented merely to assist in an understanding of the invention. The invention is not dependent, however, on any theories of operation, but involves novel, practical and useful apparatus for the deposition of materials in pattern form. The objects of the invention are set forth below, together with practical procedure for realizing these objects.

A principal object of the invention is to deposit electrically upon a surface to be coated and/or decorated with patterns or figures, particles which have been disseminated in the vicinity of the surface to be coated.

A further object of the invention is to provide means for depositing upon a surface in non-uniform but controllable manner material which has been suspended in a fluid in finely divided form without first collecting and removing the material from the fluid.

A further object is to place material in decorative outline on an extended surface without handling the material manually.

A further object is to provide for building deposits of material upon surfaces with means for controlling the outline and the depth of the deposits. Another object is to permit material to be deposited as a dry powder and in pattern form upon a surface and to be thereafter incorporated into said surface by heat and/or chemical action. Still another object is to lay down patterns upon a surface with material composed of particles having different characteristics and to shade the patterns by depositing the particles differentially.

Another object of the invention is to coat an extended surface with decorative outlines, the outlines on different portions of the surface being of equal depth by establishing an electric field essentially perpendicular to the surface to be coated and then introducing coating material in finely divided form into the electric field.

The manner of realising the above mentioned and other objects of the invention will be made clear in the following description, reference being had to the appended drawings, of which:

Fig. 1 is a side view, in sectional elevation, on line 1—1 of Fig. 2, of apparatus for carrying out the invention;

Fig. 2 is a plan view, partly in section on line 2—2 of the apparatus shown in Fig. 1;

Fig. 3 is a side view, in sectional elevation, of apparatus for utilizing the invention in somewhat modified manner;

Fig. 4 is a fragmentary horizontal section on line 4—4 of Fig. 3;

Fig. 5 is an end view, in sectional elevation, of other apparatus useful in carrying out the invention;

Figs. 6 to 13, inclusive, illustrate patterns which have resulted from the use of the invention;

Fig. 14 is a plan view of the discharge edge comprised in the apparatus which formed the pattern shown in Fig. 16;

Fig. 15 is a side view of a fragmentary portion as taken along line 15—15 of the discharge edge shown in Fig. 14;

Figs. 16 and 17 illustrate other patterns made by use of the invention;

Fig. 18 shows in plan view the arrangement of certain details;

Fig. 19 is a side elevation of the details shown in Fig. 18;

Fig. 20 illustrates in plan view, partly in section on line 20—20 of Fig. 21, apparatus for the deposition and fusing of material in powdered form; and

Fig. 21 illustrates in sectional elevation on line 21—21 the apparatus shown in Fig. 20.

The apparatus illustrated in Figs. 1 and 2 comprises a chamber or casing 1 with fluid inlet 2 and fluid outlet 3, electrode elements 4, opposing complementary electrode member 5 and removable cover member 6. The chamber can be made of either conducting or insulating material, but it is essential that electrode elements 4 be maintained in insulated relationship to electrode 5 and an advantageous construction for providing this relationship is to make cover member 6 of insulating material and have it support elements 4. Elements 4 are usually connected to a source of electrical energy at high potential, as indicated diagrammatically at 8, by connector 7; and member 5 is usually grounded through connector 12, for example. The fluid in which the pattern forming particles are suspended is forced into the apparatus, by means of a fan, for instance, and passes through the electric field between points 9 of elements 4 and plate electrode 5. The particles are deposited on plate 5 in pattern form, as indicated at 11, and the fluid, largely freed from suspended particles, leaves the apparatus through outlet 3. Members 10 are mainly to supply boundaries for the fluid, but can be used to influence the shape of the electric field to some degree by making them of suitable material and form.

Figs. 3 and 4 show apparatus comprising chamber 21, fluid inlet 22, fluid outlet 23, fluid directing means 29, 29', 28 and 29, discharge electrode elements 24, pattern receiving electrode 25, insulating electrode supports 26 and 26' and high potential lead 30 passing through combined support and bushing 28. In this construction it is convenient to ground the discharge elements 24, the chamber 21 and the directing means 28, 29, and 29 through connector 27, and to connect electrode 25 to a source of high potential energy (not shown) through connector 30. The outstanding characteristic of the apparatus shown in Figs. 3 and 4 is that means are provided for directing the fluid and suspended particles into the electric field in a direction more or less parallel to the lines of force. In the apparatus shown in Figs. 1 and 2 the fluid enters at right angles to the lines of force.

Fig. 5 illustrates apparatus embodying other means for bringing the fluid into the electric field in a direction parallel to the lines of force. Chamber 31 has a top 36 of insulating material through which a tube 40 projects and the particle-bearing fluid, brought to the apparatus through a tube 32, for example of rubber, which insulates it from the supply source, flows through tube 40 into the electric field between the ends of discharge electrode elements 34 and plate electrode 35. The fluid leaves the chamber through outlets 33. The desired difference in potential between the elements 34 and complementary electrode 35 is obtained similarly to the manner shown in Fig. 1, connection 37 in Fig. 5 corresponding to connection 7 in Fig. 1. Electrode 35, which is supported on stand 38, may or may not directly receive the patterned deposit. As shown, a plate 39 has been placed upon electrode 35 to receive the deposit. If this plate is conducting, the upper surface of the plate will constitute the boundary of the electric field, but if non-conducting, the upper surface of plate 35 will be the boundary or terminal of the electric field and the field will pass through plate 39. Elements 34 are held in cover 36 by a friction fit, although more positive means can be utilized, and they can be positioned to various distances above plate 35. Element 34', which is supported within tube 40, is purposely shown farther from plate 35 than members 34 because of the change in pattern that this difference in discharge distance provides.

Reference will now be made to some of the patterns illustrated and the method of making them. In this invention emphasis is laid upon concentrating portions of electric fields as by the use of discharge points and making these portions of definite concentration and outline so the patterns resulting from their use will be definite and reproducible. To illustrate this point attention is called to the results obtained when the discharge surface of electrodes is not definite. The pattern shown in Fig. 6 was made in apparatus similar to that shown in Fig. 1, but instead of using points 9 in the formation

of corona discharges, a spiral of 1/8 inch diameter wire was suspended at the level of points 9—the plane of the spiral being parallel to and approximately 4" above electrode plate 5. Such a spiral is indicated with dash lines 61 on Fig. 6 as if superimposed directly above the pattern made by the discharge from the spiral. A voltage drop of 67.5 kv. was impressed intermittently across the electrodes, connections being made to a mechanical rectifier installation as shown in Fig. 1. The wire discharge electrode was made negative; the plate was grounded and positive with respect to the wire electrode. The voltage was applied intermittently because it has been found that continuous application of voltage difference does not result in an even deposition of material when the particles are floated into the field slowly, and in this instance the air, which was used as a carrier fluid, was passed through the apparatus at less than three feet per second. The material deposited had been ground to a fineness which permitted over 90 percent to pass 200 mesh. It was floated over plate 5 by the air stream and precipitated from the air upon that plate by the electric forces set up when voltage was applied. Floating the particles over the surface to be coated in this manner before applying a voltage difference makes for even deposits, especially if air velocities and voltages are not of too high values.

The higher the voltage maintained across the electrodes the more definite the outline, but it should be kept below arcing or "spark-over" values because spark-overs tend to puncture the deposited pattern and make for unsteady conditions. Regardless of potential, however, a smooth wire electrode seldom forms a definite pattern. The corona beads shift along the wire, the electric wind and ionic bombardment are not definite, either as regards position or intensity, and the pattern cannot be expected to be regular in outline even if it is more or less definite. The pattern made by the spiral of smooth wire shown in Fig. 6 is very irregular and is not generally reproducible. For some purposes, however, such informal designs are desirable.

The pattern shown in Fig. 7 was made by using three smooth 1/8 inch diameter wires as discharge electrodes as indicated by 42. They were held above and parallel to receiving plate electrode 5 in the apparatus shown in Fig. 1 and were spaced 1½ inches apart. The air used as a carrier fluid was passed through the apparatus at 23 feet per second. The voltage between wires and plate was maintained continuously, at between 65 and 75 kv., with the wires negative. Here again a very informal pattern was formed.

The pattern in Fig. 8 was made with the apparatus shown in Fig. 5. Four pointed rods 34 were symmetrically arranged around central point 34' as corners of a square having sides two inches long, as indicated by the dots 54 and 54' on the pattern. All points were four inches above plate 35, and a voltage drop of between 67 and 70 kilovolts was impressed across the electrodes. The points were grounded and the plate was connected to the high potential side of a mechanical rectifier, an insulated bushing being used in the manner shown at 26 in Fig. 3, causing 67 to 70 kilovolts to be impressed between points and plate. The material deposited was electrically collected ash from gases leaving powdered fuel burners and was exceedingly fine, most of it passing 325 mesh. It was redispersed in air in apparatus (not shown) comprising a chamber and dispersing fan and then blown through pipe 60 which was ¾ inch standard pipe into the electric field, below the discharge points. The distribution of particles in the pattern was unique in that the larger and darker particles, mostly carbonaceous, were found in outer portions 51, the inner region 53 was of heavy gray very evenly distributed, and the lines 52 were lighter in color and of extremely finely divided material, thinly deposited.

Fig. 9 shows a design made similarly to the design in Fig. 8, except that rods 34 were drawn up until the points were 1/8 inch farther from plate 5 than was the point on rod 34'. The portions of the electric field terminating on these points now had less influence on that portion of the field terminating on the central point, on rod 34', and the lines of the pattern became concave as shown at 55.

Fig. 10 shows another pattern made with the apparatus shown in Fig. 5. The discharge electrode was made up of eight elements arranged on a circle four inches in diameter about point 34' as a center. On the pattern these are indicated at 56 and 56', respectively. The points were of negative polarity with respect to plate 35 and a voltage drop of 67 kv. was impressed across the four inch spacing between points and plate. When the points are made positive with such a set up, the voltage should be lowered to not over 50 kv. with most pattern forming materials. Positive corona gives a different and usually a much less distinct pattern.

The pattern in Fig. 11 was made similarly to the pattern in Fig. 10, except that central point 34 was entirely withdrawn resulting in the absence of circle 57.

The patterns in Figs. 12 and 13 were also made in apparatus similar to that shown in Fig. 5, but instead of pointed members 34, parallel strips projected downward from cover 36. These strips were one and one-half inches apart and along the bottom edge of each strip were six points, one inch apart. The region of light deposition is shown at 58. It is here that the effect of the mutual interference of the several portions of the electric field is readily seen. If a slot 59 is placed in the collecting plate along this interference zone, the result will be much the same, as shown in Fig. 13. Changes in the contour of the collecting plate do make some changes in the patterns formed, but in general the changes are controlled more definitely by changing the discharge elements and it is most practical to associate these elements with what has been termed the discharge electrode—the electrode that does not receive a pattern.

Figs. 14 and 15 illustrate the discharge electrode used in forming the pattern shown in Fig. 16. Spiral 90 is made of a metal strip two inches wide with points 91 spaced 1½ inches apart projecting out ¼ inch from one edge. This electrode was held over plate electrode 5 in Fig. 1 with each point 4 inches above the plate. Different air velocities and voltages were used with somewhat different results. The pattern shown in Fig. 16 was made with an air flow of 1½ to 2 feet per second and a voltage difference of 67.5 applied intermittently—one second on and one second off.

Fig. 17 illustrates what can be accomplished with the present invention in building patterns in prominent relief. The pattern was made with the discharge elements shown in Figs. 18 and 19.

Tubes 71 are made from ⅛ inch standard pipe with the ends 72 sharpened to provide discharge edges. These edges may be nicked to give positive positions for the "corona beads" or local discharges, but the limited length of the edges on ⅛ inch pipe makes this unnecessary. The gaseous medium containing suspended particles was forced to the tubes 71 by blower 73, through conduits 74 having dampers 75 for controlling the flow to each tube.

The pattern was made with the four outside tubes 71 placed with their centers on the corners of a 1½ inch square. Their position relative to the pattern is indicated by the dotted circles 76. In this pattern in Fig. 17 portions 66 are very prominent. They really comprise ridges rising about ⅝ inch above the plane of the pattern receiving plate and can be formed with sharp edges. Portions 67 are smoother with very light deposits. Portions 68 are apt to be from ⅛ to ¼ inch in depth and less smooth than portions 67. Portion 69 is almost free from deposit. The changes in depth of deposit make these patterns very definite and distinctive. They are more distinctive when made with particles that differ as regards size and color and electric characteristics. The electric forces arrange the particles of different characteristics in pleasing arrangements, often with variegated effects.

It will be seen that the invention provides apparatus for the electrical deposition of particles in pattern form which includes receiving electrode means and complementary electrode means insulated from the receiving electrode means and comprising a plurality of ionizing portions positioned to define either a planar or a non-planar surface spaced from the receiving electrode means whereby topical concentration and deposition of suspended particles between the electrode means is effected when an electrical field is maintained thereacross.

Figs. 20 and 21 show apparatus that can be used to apply the present invention in commercial manner. It is particularly adapted to the decorating of metal simulated "tile" used in covering the walls, floors and ceilings of public buildings. A deposition chamber 80 with gas inlet 81 and gas outlet 82 and electrically insulated roof member 83 has an inlet 84 and outlet 85 for a conveyor flight 86. The conveyor member 86 is of heat resisting material; for instance, it may be made of links of heat resisting chrome steel alloy. It is supported upon rollers 87 and adjustable doors 88 limit the openings 84 and 85 where it passes into and out of chamber 80. The conveyor is preferably held at ground potential as indicated by grounding means 89. Projecting through roof 83 are discharge elements 90 connected to a source of high potential energy, not shown, by connector 91. Elements 90 are shown as pointed rods; for example of steel, but instead of rods, tubes as shown in Figs. 5 and 19 can be used, in which case the material for the patterns can be introduced through the tubes and gas inlet 81 can be dispensed with.

The metal blanks upon which the patterns are to be deposited are brought into chamber 80 on conveyor 86 and held under discharge elements 90 as shown at 92 while the deposition is being made. When the blank is in proper position doors 88 are closed as far as possible, preferably by automatic means (not shown), and a gas which can be air but which may be any other gas; for example, non-oxidising gases taken from furnace 94, is introduced through inlet 81. This gas carries in suspension the particles to be precipitated upon blank 92. The particles may be of colored sand, feldspar, kaolin, tin oxide and other metallic pigments or combinations of such materials. When the particles have floated into the space between the points of elements 90 and the blank 92, voltage is applied and the particles precipitated. For some patterns a gas velocity of 15 to 35 feet per second is set up and the voltage is maintained continuously until the pattern is of the required depth. For other patterns the particles are floated over the blank at low velocities perhaps as low as one foot per second and the voltage is applied intermittently until the pattern is of satisfactory depth and outline. In general it may be said that a pattern is formed in from ten seconds to two minutes.

If tubes are used to bring in the particles and they are projected directly towards the blank 92 the velocity of the gas leaving the tubes must be very low, preferably less than one foot per second, or else the effect of the air stream may be too large a factor as compared with the electric forces. It has been found advisable to keep the particles suspended in a gas stream moving in a closed circuit, including a fan functioning as a particle disseminator, and having the gas path through the depositing chamber 80, a shunt in parallel with this circuit being opened and closed when a pattern is to be deposited. Settling of the particles by gravity is thus minimized.

Referring again particularly to Figs. 20 and 21, a coated blank 92, after leaving chamber 80, is brought into the bottom of furnace 94 on conveyor 86 and is held in the position shown at 92' while another blank 92 is being coated in chamber 80. Furnace 94 comprises a combustion chamber 96 which includes a shell of heat refractory brick 97 inclosed in heat insulating brick 98. A burner is provided at 100 and an outlet for the gases of combustion at 99. The ends of the combustion chamber are held above conveyor 86 by steel members 101, which members are protected from intensive heat radiation by refractory brick 102. A comparatively thin plate or sheet of material having the properties of resisting disintegration at high temperatures and yet permitting heat to pass through in efficient manner is shown at 103. This sheet is placed in horizontal position above conveyor 86 and seals off combustion chamber 96 and prevents the gases circulating in that chamber from blowing against the pattern on blank 92. Sheet 103 may be made of fused silica or silicon carbide or other material which permits the heat radiating from the hot gases and carbon in chamber 96 and from the roof and walls of that chamber to be transmitted in large part to the pattern on blank 92 that is to be fused or alloyed or otherwise thermically treated.

It is to be understood that modifications can be made in the furnace if needed to effect synchronism of heat treatment with pattern forming. The furnace can be lengthened so that blank 92 will remain under heat for two or three pattern deposition periods. Or if the deposition period must be extended beyond a proper time for heat treatment, a heat resisting shield, not shown, can be placed over the blank 92 after it has been properly fused to protect it from excessive heating. Good results have been obtained by first alloying at rather high temperature, by means not shown, the surface of blanks 92 with cobalt compounds, then after cooling, as required, depositing a pattern in chamber 80 of

material that fuses at comparatively low temperture upon the alloyed surface and then fusing the pattern in furnace 24.

The manner of attaching the patterns to the surface to be decorated, just described, is only one of many methods which can be used in carrying out the invention. For instance, another manner of fixing the pattern to the surface treated is to spray the pattern with an adhesive such as a solution of shellac in alcohol, which in turn after evaporation of the alcohol can be sprayed with moisture resisting coatings.

Another method of attaching the material forming the patterns is to impregnate the material with substances which will promote chemical reactions in the materials. For instance, if plaster of Paris is laid down as a pattern, it can be hardened by subjecting the pattern to an atmosphere of high humidity or even a super-saturated atmosphere which will bring about the well known hydrating reaction in the plaster of Paris.

Pigments deposited upon porous surfaces can be impregnated with linseed oil, for instance, by spraying the under side of the material with linseed oil and allowing it to work up into the pigment by capillary action. The oil will harden by oxidation and polymerization and cohere the particles of pigment in this way.

Where the electrode and electric field are capable of forming patterns directly upon a surface, the surface itself can be coated with an adhesive before the pattern making operation is begun. In the making of some patterns, however, there is a shifting of the material after initial deposition and this cannot take place if the material is placed initially against a surface covered with an adhesive.

Numerous combinations of electrode elements can be made up which will give countless patterns of different outlines and characteristics. It is believed, however, that the foregoing description makes it readily possible for those versed in the art of electrical deposition to obtain such patterns through reasonable trials and without the need of further inventive ingenuity.

It will be understood that deposition under conditions usually found in dust removing equipment utilizing electric discharge does not furnish patterns of distinctive outline. When the electric field is maintainined continuously there is selective action at the entrance of the field which usually makes the deposit heaviest at that place. A method of avoiding this difficulty as disclosed in the foregoing description comprises intermittently applying the electric field which permits the pattern forming particles to float uniformly over the surface to be coated before deposition is effected. While the voltage is temporarily reduced, the particles can be floated over very extended surfaces over which several sets of electrodes are supported, and then, upon application of a high voltage difference, one large or several smaller patterns will be deposited upon the extended surface. So, as has been previously stated, good patterns are often obtained by raising the velocity of the particle carrying fluid to comparatively high values, say from 18 to 40' per second. At this velocity the particles penetrate well into the electric field before deposition and many useful patterns are made with such velocities and the continuous application of the electric field.

It will often be found advantageous to adjust the humidity of the carrier gas in order to obtain more satisfactory deposition. For example, a relative humidity of at least 50% is usually advantageous and frequently a relative humidity of over 75% is desirable.

In using tubes for the combined purpose of effecting discharges and of conducting the particles into the electric field countless different patterns can be made when the different tubes are variously spaced and the particles entering through these tubes are caused to enter at different velocities.

I claim:—

1. Apparatus for the electrical deposition of particles in pattern form comprising receiving electrode means adjacent which the pattern is to be deposited, complementary electrode means insulated from the receiving electrode means and comprising a plurality of ionizing portions adjustably positioned relative to each other and to the receiving electrode means, energizing means for maintaining a strong electric field between the receiving and the complementary electrode means, and means for bringing a suspension of particles to be deposited into the space between said electrode means.

2. In apparatus utilizing an electric field for depositing particles in pattern form, an electrode defining one boundary of the electric field, said electrode comprising a plurality of conduits for conducting suspensions of particles into the electric field having corona-forming portions adjacent the outlets thereof, said conduits and corona-forming portions being positioned to cause topical concentration of suspended particles in said field, and a complementary electrode defining the opposing boundary of the electric field.

3. In apparatus utilizing an electric field for depositing particles in pattern form, an electrode defining one boundary of the electric field, said electrode comprising a plurality of corona-forming portions positioned to cause topical concentration of suspended particles in said field, at least one of said corona-forming portions consisting of a conduit for conducting suspensions of particles into the electric field, and a complementary electrode defining the opposing boundary of the electric field.

4. In apparatus utilizing an electric field for depositing particles in pattern form, an electrode defining one boundary of the electric field, said electrode comprising a plurality of conduits having corona-forming portions adjacent the outlets thereof, said conduits and corona-forming portions being positioned to cause topical concentration of suspended particles in said field, means for passing a suspension of particles through said conduits into the electric field, and a complementary electrode defining the opposing boundary of the electric field.

5. In apparatus utilizing an electric field for depositing particles in pattern form, an electrode defining one boundary of the electric field, said electrode comprising a plurality of conduits having corona-forming portions adjacent the outlets thereof, said conduits and corona-forming portions being positioned to cause topical concentration of suspended particles in said field, means for passing a suspension of particles through said conduits into the electric field, control means to vary the flow of said suspension through the several conduits respectively, and a complementary electrode defining the opposing boundary of the electric field.

6. Apparatus for producing a patterned coating on a surface comprising means defining a

chamber, opposed electrode members in said chamber, at least one of said electrode members comprising a plurality of mutually interfering corona-forming portions positioned to cause topical concentration of suspended particles in said field, means for supporting a surface to be coated adjacent one of said electrode members, means for supplying a gaseous fluid containing suspended coating particles between said electrode members, means for impressing a high potential across said electrode members, and means for agglomerating the deposited particles.

7. Apparatus for producing a patterned coating on a surface comprising means defining a chamber, opposed electrode members in said chamber, at least one of said electrode members comprising a plurality of mutually interfering corona-forming portions positioned to cause topical concentration of suspended particles in said field, means for supporting a surface to be coated adjacent one of said electrode members, means for supplying a gaseous fluid containing suspended coating particles between said electrode members, means for impressing a high potential across said electrode members, and heating means for agglomerating the deposited particles.

8. Apparatus for the electrical deposition of particles in pattern form comprising receiving electrode means adjacent which the pattern is to be deposited, complementary electrode means insulated from the receiving electrode means and comprising a plurality of ionising portions positioned to define a surface spaced from the receiving electrode means whereby to cause topical concentration of suspended particles between said electrode means when an electrical field is maintained thereacross, energising means for maintaining a strong electrical field between the receiving and the complementary electrode means, and means for bringing a suspension of particles to be deposited into the space between said electrode means.

9. Apparatus for the electrical deposition of particles in pattern form comprising receiving electrode means adjacent which the pattern is to be deposited, complementary electrode means insulated from the receiving electrode means and comprising a plurality of ionising portions positioned to define a non-planar surface spaced from the receiving electrode means whereby to cause topical concentration of suspended particles between said electrode means when an electrical field is maintained thereacross, energising means for maintaining a strong electrical field between the receiving and the complementary electrode means, and means for bringing a suspension of particles to be deposited into the space between said electrode means.

10. Apparatus for the electrical deposition of particles in pattern form comprising receiving electrode means adjacent which the pattern is to be deposited, complementary electrode means insulated from the receiving electrode means and comprising a plurality of ionising portions positioned to define a plane surface spaced from the receiving electrode means whereby to cause topical concentration of suspended particles between said electrode means when an electrical field is maintained thereacross, energising means for maintaining a strong electrical field between the receiving and the complementary electrode means, and means for bringing a suspension of particles to be deposited into the space between said electrode means.

ARCHIBALD F. MESTON.

Nov. 17, 1942. H. E. BRAMSTON-COOK 2,302,289

ELECTRIFIED SPRAY METHOD AND APPARATUS

Filed Dec. 6, 1938

Fig. 1.

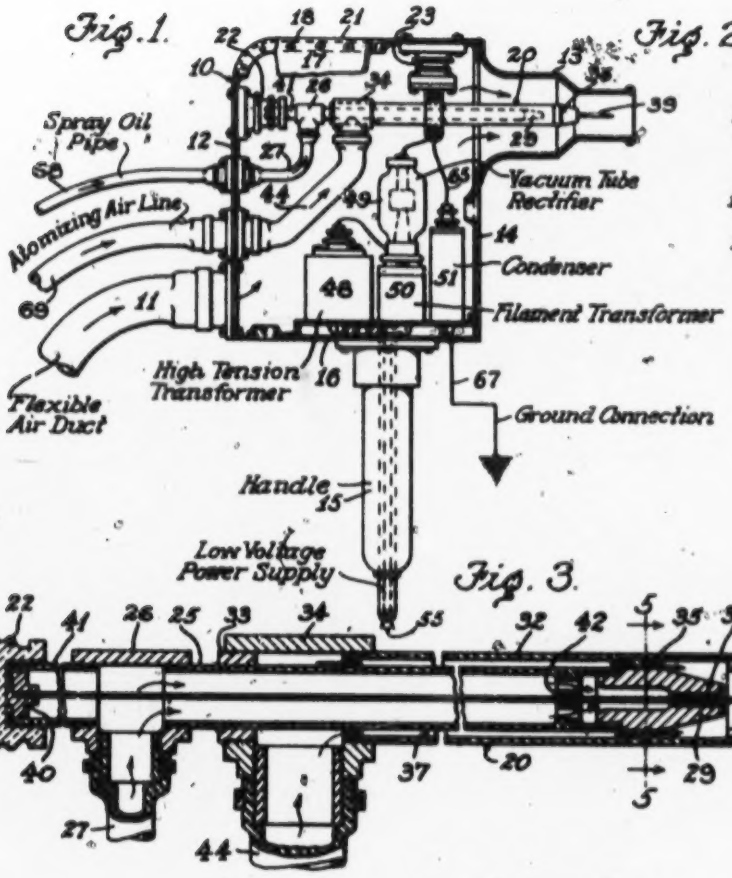

Fig. 2.

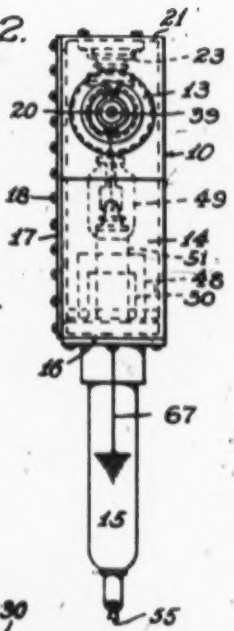

Fig. 3.

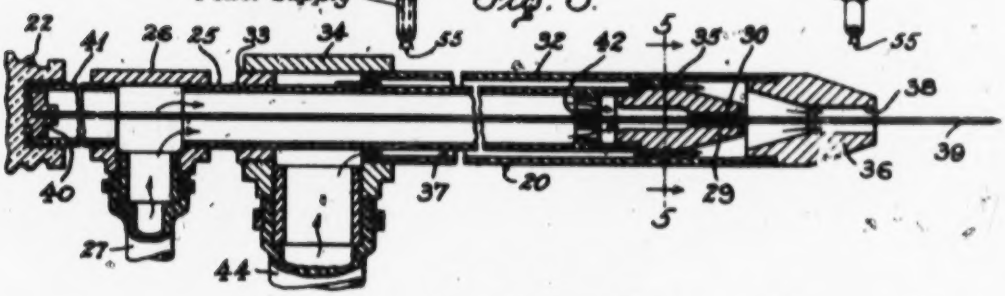

Fig. 4.

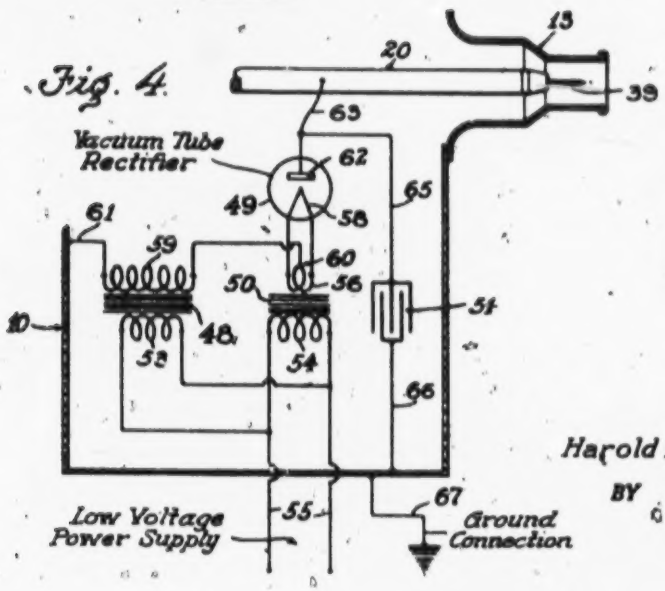

Fig. 5.

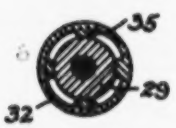

INVENTOR.
Harold E. Bramston-Cook
BY Philip Hubbard
ATTORNEY.

UNITED STATES PATENT OFFICE

2,302,289

ELECTRIFIED SPRAY METHOD AND APPARATUS

Harold E. Bramston-Cook, Santa Monica, Calif., assignor to Union Oil Company of California, Los Angeles, Calif., a corporation of California

Application December 6, 1938, Serial No. 244,194

6 Claims. (Cl. 21—8)

This invention relates to liquid sprayers and particularly to sprayers for the application of insecticidal and fungicidal oils to plants.

In the conventional method of applying such oils to plants an emulsion of the oil in water is usually made and the emulsion sprayed upon the plants with the result that upon evaporation of the water, the oil is left in the form of an extremely thin film of fairly uniform thickness and distribution.

However, the employment of water as a carrier for the spray is not always desirable or permissible. For example, in pest control in deciduous fruit growing areas such as the Pacific Northwest, the freezing temperatures occasionally encountered during the spraying season would, if immediately following the application of a water emulsion, result in severe damage to the trees. Also, in certain locations sufficient water for the preparation of a spray oil emulsion is not always available at the required time.

The efficient and effective application of spray oils to plants, particularly, trees, by mechanical atomization of the spray oil alone without a water carrier, has heretofore presented several difficulties. When sufficiently high velocities of the atomized liquid are employed to effectively reach the higher and more distant branches of trees, the velocity is such that the liquid particles tend to stream around the branches rather than to impinge upon them. When low velocity atomization is employed, the higher limbs of trees cannot be effectively reached without overapplication on the lower branches. It has also been found that the oil, even if finely atomized, quickly coalesces to form larger droplets which are unsuited to accomplishing an even distribution of the spray oil upon the plant surfaces and that, in all events, a substantial proportion of the spray fails to impinge upon any part of the plant or tree and is thus wasted.

It is, therefore, an object of this invention to present a method and apparatus for the efficient and effective application of spray oils to plants and to accomplish the same without employing extraneous carrier liquids.

The invention resides broadly in a method and apparatus for the atomization of spray liquids in the presence of an intense electric field whereby the resultant cloud of atomized liquid spray particles is electrified and causing said electrified atomized spray to move to the surfaces to be sprayed under the influence of an electric field.

Other objects and features of the invention will be evident hereinafter.

Referring to the drawing which illustrates one preferred embodiment of the invention, Fig. 1 is a side sectional elevation of the spray generating apparatus. Figure 2 is a front elevation of the apparatus of Figure 1. Figure 3 is a cross-sectional detail of the spray nozzle. Figure 4 is a wiring diagram of the electrical elements of the apparatus. Figure 5 is a cross-section of the spray nozzle taken on lines 5—5 of Figure 3.

The apparatus of the invention is as follows: The body of this apparatus, as shown in Figures 1 and 2, comprises a substantially rectangular metal body or container 10 having an air inlet duct 11, attached at the lower rear end 12, an air and spray outlet nozzle 13 projecting forward from the upper end 14, and a handle 15 extending downward from the bottom 16 thereof. A removable side cover plate 17 adapted to allow ready access to the interior of the sprayer body container 10 is held in place by means of a plurality of studs as shown at 18.

On the interior of the enclosure 10, a spray nozzle 20 shown in enlarged detail in Figure 3, is supported from the inside back 12 and top 21 by means of insulators 22 and 23, respectively, extending into and coaxial with the outlet nozzle 13.

The spray nozzle 20, which is shown in cross-sectional detail of Figure 3, comprises an inner tube 25 terminating at the rear end in a T-connection 26 through which spray liquid is adapted to be supplied from the attached flexible tubing 27, and terminating at the forward end in an inner spray head 28 having an orifice 30 of reduced diameter. The nozzle 20 also comprises an outer concentric tube supported and connected, at the rear end, to the inner tubing 25 by means of a threaded bushing 33 and T-connection 34 and supported near the forward end by means of a perforate spider 35 best shown in section in Figure 5. The said outer tube 32 terminates at the forward end in an outer spray head 36 having an orifice 38 of reduced diameter. Extending coaxially throughout the length of the nozzle 20 and passing out through the orifices 30 and 38 is a pointed metal rod electrode 39. The said rod electrode is supported in its coaxial position by means of a threaded plug 40 in the nipple 41 which extends rearward from the T-connection 26, and near the forward end it is supported by the perforate centering spider 42. As stated before, spray liquid is adapted to be supplied to the inner spray head 28 through the inner tubing 25, flexible pipe 27 and T-connection 26, and also atomizing air or other suit-

able fluid under pressure is adapted to be supplied to the nozzle spray head 36 through a flexible pipe 44, T-connection 34 and through the annular space 37 between the inner and outer tubes 25 and 32, respectively. Flexible pipes 27 and 44 are made of insulating material such as rubber or duprene.

Also enclosed within the body 10, as shown in Figure 1, the wiring diagram of which is shown in Figure 4, is the electrical equipment adapted to supply a high tension unidirectional electric current to the nozzle assembly and to the central pointed electrode 30, the said equipment comprising a high tension transformer 48, vacuum tube rectifier 49, tube rectifier filament supply transformer 50 and high tension filter condenser 51.

Referring particularly to the wiring diagram of Figure 4, the primaries 53 and 54 of the transformers 48 and 50, respectively, are connected in parallel to insulated electrical conductors 55 which serve to carry the low tension current supply thereto and which enter the sprayer enclosure 10 through a conduit provided through the center of the handle 15. The secondary 56 of the filament transformer 50 is connected across the vacuum tube rectifier filament 60 and serves to supply the heating current thereto. The secondary 58 of the high tension setup transformer 48 is connected at one end to the rectifier filament by way of the filament transformer center tap 59 and at the other end to the metal sprayer body 10 at 61. The said body 10 being a conductor, the electrical circuit is completed therethrough to the metal outer nozzle 12. The anode 62 of the vacuum tube rectifier 49 is in turn connected to the nozzle assembly 29 and the central rod electrode 30 by way of conductor 63. The series high tension circuit comprising the body 10, high tension transformer secondary 58, and vacuum tube rectifier 49, serve to supply an unidirectional high potential between the nozzle electrode assembly 29, 30, and the outer nozzle 12. The high tension condenser 51 is connected across the above outlined circuit by means of conductors 65 and 66 for the purpose of substantially smoothing out or reducing the peak of the resultant unidirectional pulsations.

The body 10 of the sprayer is connected to a suitable grounded terminal by way of a flexible insulated conductor 67.

Flexible pipe 68 and flexible line 69 serve to supply spray-liquid and air, respectively, to the pipes 27 and 44 which lead to the before described spray nozzle 29. The air duct 11 serves to supply air under pressure from a suitable blower to the sprayer body 10 through which it passes to the outer nozzle 12.

The operation of the apparatus is as follows:

With the high potential supply set in operation an unidirectional electric potential is maintained between the nozzle electrode assembly 29, 30 and the outer electrode nozzle 12, preferably of sufficient gradient to produce a silent electric discharge or a corona discharge therebetween, particularly between the rod electrode 30 and nozzle 12. Spray liquid and air may then be supplied through the spray oil pipe 68 and the atomizing air line 69, respectively, to the nozzle assembly 29. The spray liquid passes therefrom through the inner tube 25 and issues from the orifice 38 in the nozzle head 29 in the form of a high velocity stream where it meets and mixes with air under pressure flowing through the annular space between the tubes 25 and 32. The resulting mixture of air and spray under pressure passes out of the spray head 36, with high turbulence, through the annular space formed between the orifice 38 and the rod electrode 30 in the form of a finely atomized stream.

As the thus formed stream of the air and atomized spray liquid mixture passes outward along the length of the rod electrode 30, it is subjected to the ionizing effect of the corona discharge from the said rod electrode whereby the finely divided liquid particles comprising the said atomized spray are each imparted electrical charges of like polarity and of substantially equal potential with respect to the outer nozzle electrode 12. The said outer nozzle electrode 12 being grounded through sprayer body 10 and the ground connection 67, the thus charged atomized liquid particles are, therefore, at high electric potentials of substantially equal value with respect to all grounded objects such as for example plants and trees. The effect of this charged state of the atomized liquid-air mixture is twofold. First, the thus formed equally charged liquid spray particles, in effect, tend to repel one another and thus resist coalescence, with the result that the thus produced electrified cloud of atomized spray liquid persists for a longer period of time, affording thereby better opportunity for its more uniform and effective contact with surfaces to be coated. Second, the said atomized liquid spray particles, being at a high potential with respect to all the surrounding grounded objects, will be attracted and tend to move toward and precipitate in a layer upon the nearest surfaces of such grounded objects.

Thus, for example, an electrified cloud of atomized spray liquid carrying a high potential positive charge as produced in the above described manner and directed toward the branches and leaves of a plant or tree carrying a high potential negative charge with respect to said electrified cloud of spray liquid, will be attracted to said branches and leaves and quickly precipitated thereon in the form of a thin uniformly distributed film of liquid.

While the electrical apparatus by way of illustration has been shown and described as adapted to impart positive electrical charges to the spray liquid, with respect to ground, the apparatus may obviously be arranged to impart negative charges to the spray liquid with respect to ground with equal effect.

When it is desirable or necessary to project the atomized spray liquid cloud for a considerable distance, this is more effectively accomplished by supplying a relatively large volume of air under suitable pressure through the flexible air duct 11 to the spray body 10, from which it flows through the annular space between the outer nozzle 12 and the spray nozzle assembly 29 and issues from the forward end of the outer nozzle 12 in the form of a stream of air of sufficient velocity to carry the atomized spray-liquid cloud to a greater distance than would be possible when relying upon the velocity of the atomized spray-liquid alone. This provision for projecting the atomized spray liquid cloud in a carrier stream of air is particularly advantageous when it is necessary to reach distant or high tree branches.

Unidirectional electric potentials maintained between the nozzle electrode assembly 29—30 and the outer nozzle 12, which are effective in giving the atomized spray oil droplets sufficient charge to minimize coalescence until they contact the leaves and limbs of the plant or tree being

sprayed, may range from 10,000 to 25,000 volts. When employing these voltages, the sprayer apparatus may be equipped with the outer electrode 18 having an inner diameter of approximately 2½ inches. For higher voltages, it is necessary to increase the diameter of the nozzle 18 in order to prevent flash-over between the said outer nozzle 18 and spray nozzle 20. The diameter of the outer spray nozzle 18 is preferable that which will produce at the voltages employed a potential gradient of such value between the inner surface of the nozzle 18 and the outer surface of the nozzle 20 and rod electrode 30 that a persistent silent electric discharge or corona discharge is maintained therebetween without flash-over.

The spray liquid employed may be any spray liquid but preferably a paraffinic or aromatic oil, for example, an aromatic type of oil having a viscosity of approximately 50 seconds Saybolt at 100° F. Such an oil can be readily atomized and is of sufficient viscosity, particularly at the lower temperature encountered in the spraying seasons, to prevent substantial drainage from the leaves and branches.

The foregoing is merely illustrative of a preferred method and embodiment of the invention and is not to be considered limiting since many variations may be made by those skilled in the art within the scope of the appended claims.

I claim:

1. Coating apparatus comprising in combination a means to disperse finely divided coating material in a gas stream, a substantially annular electrode, a rod electrode of relatively small diameter positioned substantially coaxially within said annular electrode, means to maintain a corona discharge through the annular space between said electrodes and means to pass said gas stream carrying dispersed finely divided coating material through said corona discharge in said annular space.

2. A method of coating surfaces with finely divided coating material which comprises dispersing a finely divided coating material in a gas stream, passing said dispersed finely divided coating material through a corona discharge maintained between a rod electrode of relatively small diameter and a second electrode spaced from said rod electrode and dispersing the thus electrified finely divided coating material by a second gas stream and causing the thus dispersed material to contact the surface to be coated.

3. A method of coating plants with a spray liquid which comprises atomizing the spray liquid by a gas stream and immediately thereafter passing said atomized spray liquid through a corona discharge maintained between a rod electrode of relatively small diameter and a second electrode spaced from said rod electrode and dispersing the thus electrified spray liquid by a second gas stream thereby forming an electrified floating cloud of said spray liquid and causing said cloud of spray liquid to contact the plants to be sprayed.

4. Coating apparatus comprising in combination means to disperse finely divided coating material in a gas stream, a rod electrode of relatively small diameter, a second electrode spaced from said rod electrode and having a larger surface than said rod electrode, means to maintain a corona discharge between said electrodes and means to pass said gas stream carrying dispersed finely divided coating material through said corona discharge.

5. Coating apparatus comprising in combination means to disperse finely divided coating material in a gas stream, a rod electrode of relatively small diameter, a second electrode spaced radially around the axis of said rod electrode, means to maintain a corona discharge between said electrodes and means to pass said gas stream carrying dispersed finely divided coating material through said corona discharge.

6. Coating apparatus comprising in combination a means to disperse finely divided coating material in a gas stream, a substantially annular electrode, a rod electrode of relatively small diameter positioned substantially coaxially with respect to said annular electrode, means to maintain a corona discharge through the annular space between said electrodes and means to pass said gas stream carrying dispersed finely divided coating material through said corona discharge in said annular space.

HAROLD E. BRAMSTON-COOK.

Nov. 16, 1943. H. P. RANSBURG ET AL 2,334,648

METHOD OF SPRAY COATING ARTICLES

Original Filed June 29, 1939 2 Sheets-Sheet 1

FIG. 1

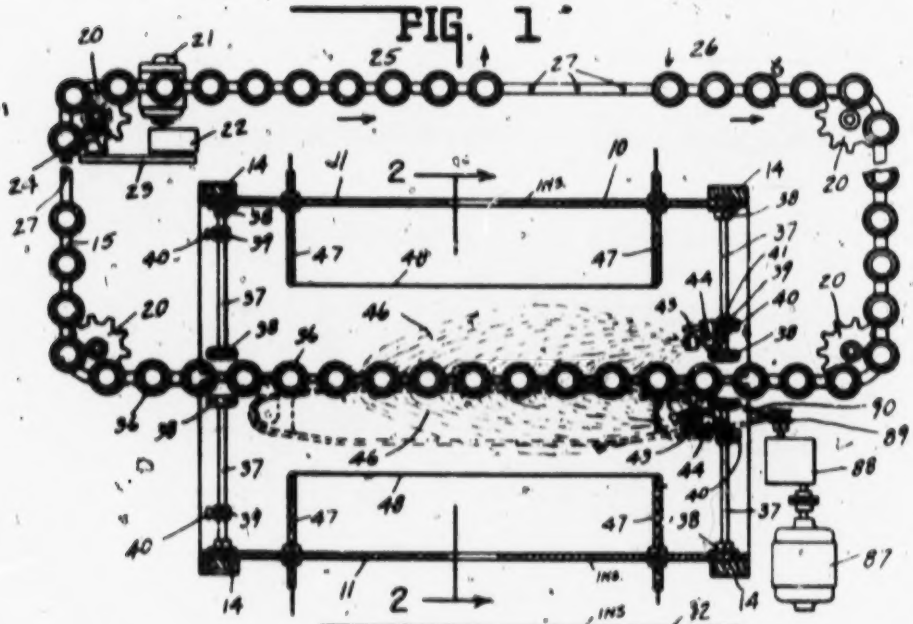

FIG. 2

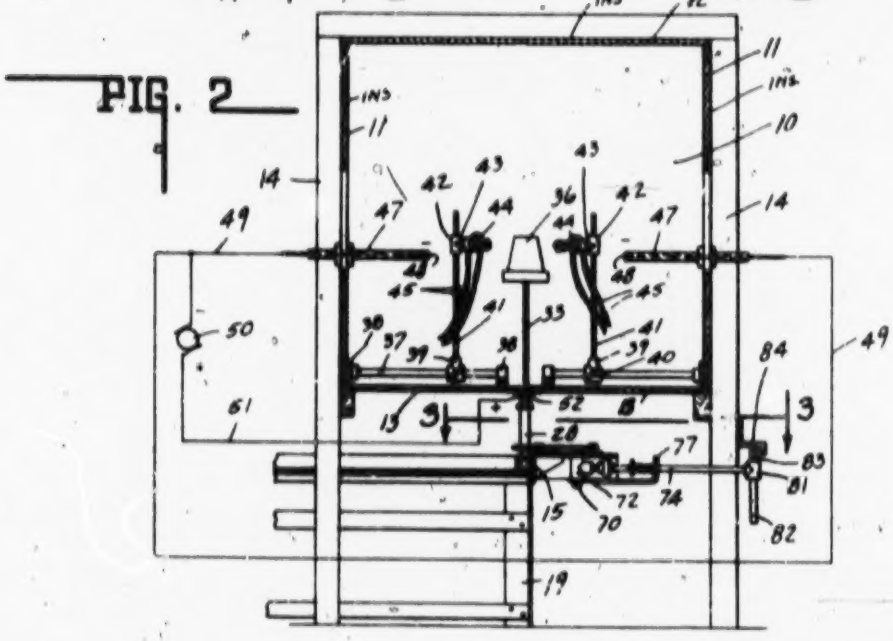

INVENTORS.
HAROLD P. RANSBURG.
HARRY J. GREEN.
BY
Lockwood, Goldsmith & Galt.
ATTORNEYS

Nov. 16, 1943. H. P. RANSBURG ET AL 2,334,648

METHOD OF SPRAY COATING ARTICLES

Original Filed June 29, 1939 2 Sheets-Sheet 2

FIG. 3

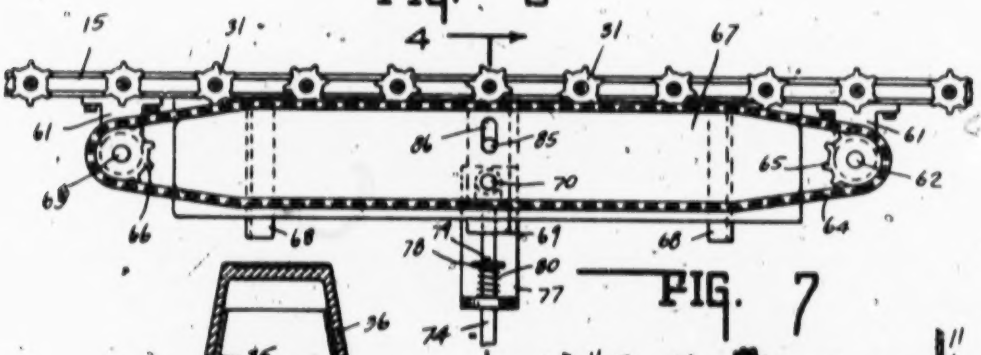

FIG. 7

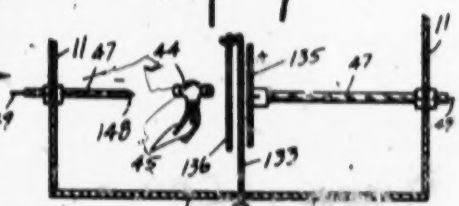

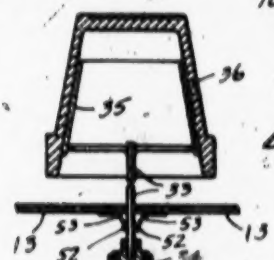

FIG. 4

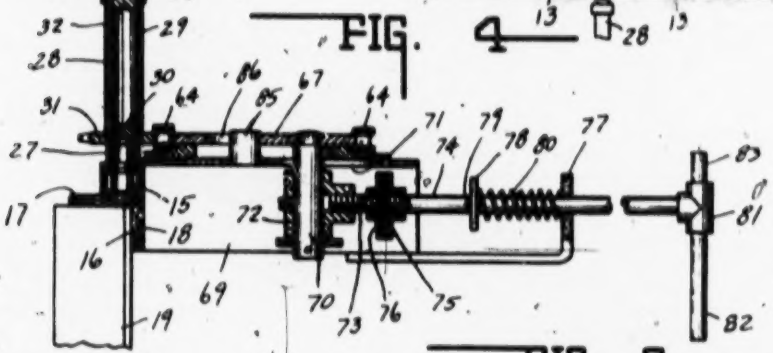

FIG. 5

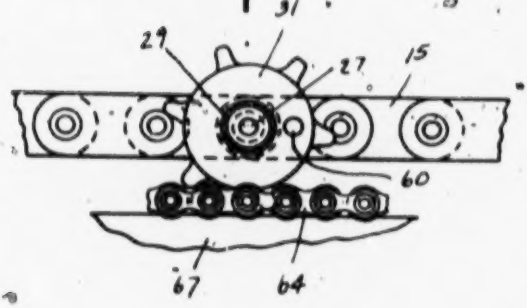

FIG. 6

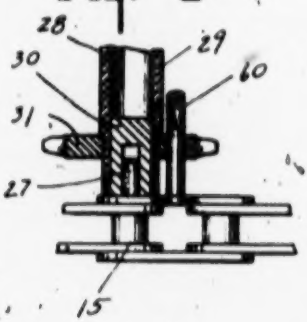

INVENTORS.
HAROLD P. RANSBURG.
HARRY J. GREEN.
BY
Lockwood, Goldsmith & Galt,
ATTORNEYS

Patented Nov. 16, 1943

2,334,648

493

UNITED STATES PATENT OFFICE

2,334,648

METHOD OF SPRAY-COATING ARTICLES

Harold P. Ransburg and Harry J. Green, Indianapolis, Ind., assignors to Harper J. Ransburg, doing business as Harper J. Ransburg Company

Original application June 20, 1938, Serial No. 214,708. Divided and this application December 7, 1939, Serial No. 308,624

2 Claims. (Cl. 117—17)

This invention relates to a method of spray coating articles. The present application is a division of application Serial No. 214,708, filed June 20, 1938.

In spray coating methods involving the application of a siccative coat such as paint, varnish, lacquer, etc., to an article or surface to be treated, in which an electrostatic field is used it has heretofore been the practice to provide a collecting electrode and a discharge electrode between which an electrostatic field is set up. Usually the article to be coated is the collecting electrode and the discharge electrode is in the form of a spray gun or other device used to direct a spray of coating material into the electrostatic field. In some cases the discharge electrode has been an object placed near the spray gun or in the path of the spray from the gun rather than the gun itself. The whole has been enclosed in a metal cabinet maintained at the potential of the discharge electrode. The theory of operation of such apparatus has been that the spray particles in touching or passing near a positively charged discharge electrode, for example, pick up initial positive charges which cause them to be attracted to the negatively charged collecting electrode and to be repelled from the positively charged walls of the cabinet.

We have found, however, that spray particles do not behave in the manner to be expected from the application of this theory. Even though the gun itself is the discharge electrode and all particles of the spray may then be expected to be electrically charged, still the spray particles apparently move toward a positively charged electrode as readily as toward a negative one, other things being equal. The walls of the cabinet, even when charged at the same potential as the gun, have substantially the same attractive effect as when charged at the opposite potential. In cases where the discharge electrode is placed in the path of the spray said electrode apparently acts as a collector of spray particles.

One object of the present invention is generally to increase the efficiency of spray coating methods of the type described and particularly to reduce the amount of coating material lost by deposition on the walls of the cabinet and on the discharge electrode. This object is attained in part, first, by substituting a cabinet formed completely of insulating material for the metallic cabinet heretofore used; second, by placing the discharge electrode as completely as possible out of the path of the spray from the gun; and third, by suitably proportioning the sizes of the discharge and collecting electrodes.

The substitution of an insulated cabinet for a metallic one in any given installation materially reduces the amount of spray material collected thereon. In some installations the deposition of spray material on the cabinet has been practically eliminated whereas with a metal cabinet a heavy coating of such material quickly appeared on the cabinet. Apparently only such particles as receive an initial velocity and direction from the gun such that they cannot be deflected by the electrostatic attraction of the electrodes can reach the walls of the insulated cabinet, whereas, with a metal cabinet, a large number of such particles are actually attracted to the cabinet irrespective of the potential at which the cabinet is maintained.

The behavoir of the particles indicates that it is unnecessary to give them an initial charge by contact or proximity to an electrode charged in the opposite potential to the collecting electrode. Apparently particles discharged into an electrostatic field are attracted to either electrode. Other things being equal, the attractive effect of a positively charged electrode is considerably greater than that of a negatively charged electrode but the attractive effect of any electrode increases immensely with an increase in the size of electrode. These facts have made it possible to increase the efficiency of the apparatus by placing the discharge electrode out of the path of spray particles and by making the discharge electrode relatively small and the collecting electrode relatively large. For the coating of small objects the discharge electrode may be in the form of a point, while for a succession of articles moving on a conveyor the discharge electrode is preferably in the form of a fine wire or a series of points arranged parallel to the direction of travel.

Another object of the invention is to provide efficient means for coating articles having a surface area too small to comprise an efficient collecting electrode. This object is attained by grouping a plurality of such articles in such way as to cause all members of the group to be presented simultaneously to the discharge electrode in such manner that their aggregate area is much greater than that of the discharge electrode.

Another object of the invention is to coordinate the velocity and direction of the spray with the strength of the electric field and the position of the article to be coated in such manner that as

little as possible of the spray fails to reach the articles. In the ordinary spray gun used for paint spraying, particles of varying sizes are created and these particles lose their initial velocities at various distances from the gun, depending upon their size. In prior practice in the painting of small articles particularly, many of the larger particles reach the region of the articles to be coated with such a high velocity remaining that they cannot be pulled in by electrostatic attraction and are carried past the article. Small particles, on the other hand, lose their velocities before they can approach close enough to the articles to be attracted electrostatically. In the present invention, in one of its preferred forms, a series of articles to be coated is moved in a predetermined path adjacent to the spray gun. The gun is directed roughly parallel to the path or inclined at an acute angle to the path so that the articles successively pass close to the points at which the initial velocities of the particles of varying sizes are lost. Thus the particles of all sizes find themselves in the region of one of the articles at the time that their initial velocities have been sufficiently reduced to permit the same to be electrostatically attracted to the article. By this means a large percentage of the paint ordinarily lost because of the varying size and velocity of the spray particles actually reaches the articles.

Another object of the invention is to minimize the hazard of explosion in electrostatic spray painting with materials having inflammable solvents.

Another object of the invention is to provide an efficient method for electrostatic spray painting of articles formed of non-conducting materials.

Other objects and features of the invention will be understood from the accompanying drawings showing a preferred form of apparatus by means of which the invention may be practiced and from the following description and claims:

Fig. 1 is a plan view of a spray painting apparatus constructed in accordance with a preferred form of the invention and having the cabinet shown in section. Fig. 2 is a vertical sectional view taken on the line 2—2 of Fig. 1. Fig. 3 is a plan view of conveyor apparatus used with the invention and is taken substantially on the line 3—3 of Fig. 2. Fig. 4 is an elevational sectional view taken on the line 4—4 of Fig. 3. Fig. 5 is a plan view of a detail of the apparatus of Figs. 3 and 4. Fig. 6 is an elevational view of the same partly in section. Fig. 7 is an end elevational view showing an adaptation of the invention to the coating of a different type of object.

In the preferred form of the apparatus shown in the drawings there is provided a cabinet 10 consisting of side walls 11, top 12 and floor plates 13, all supported by vertical posts 14. The cabinet, including the vertical posts 14, is preferably constructed entirely of electrically non-conducting materials such as wood or Bakelite or other suitable plastics. Attention is called particularly to the use of non-conducting material for the supporting posts 14. Even though an insulated cabinet is used, if the supporting posts are of metal, an appreciable deposit of coating material is found on the inner wall of the cabinet in the region of the supporting posts. As will be apparent from the drawings, the cabinet is completely open to the atmosphere at both ends. It has been found that when the combined areas of the open ends of the cabinet measured in square feet is at least equal to one-third of the total volume of the cabinet measured in cubic feet, there is no danger of explosion with electrostatic deposition of paints or enamels using ordinary commercial solvents. If the area of the open ends is less than this figure, the interior of the cabinet approaches too closely to a confined space in which an explosive mixture may be accumulated. In the cabinet illustrated in the drawings, the ratio of end area to volume is approximately one square foot to three cubic feet.

Beneath the floor of the cabinet there is provided a conveyor chain 15 supported on a trackway formed by an angle iron 16, an angle iron 17 and a plate 18 (Fig. 4). Said trackway is suitably supported by legs 19. The conveyor chain is trained about sprockets 20 and may be continuously driven by a motor 21 operating one of said sprockets through a reduction gear unit 22, a belt drive 23 and beveled gears 24. The path of the conveyor chain is best seen in Fig. 1 and leads from beneath the cabinet past an unloading station 25 and a loading station 26 and then again beneath the cabinet. At suitable intervals along the conveyor chain there are provided upwardly extending pins 27 each adapted to enter a mating opening in the lower end of a carrier unit 28. Each of said carrier units, as best seen in Fig. 4, includes a sleeve 29 preferably formed of insulating material and having in its lower end a plug 30 provided with an opening to receive the pin 27. A sprocket 31 is mounted near the lower end of the sleeve 29. A plug 32 is secured in the upper end of the sleeve 29 and is provided with a recess adapted to receive an upwardly extending rod 33. A collar 34 tightly secured about the upper end of the sleeve 29 prevents undesired displacement of the plug 32. The rod 33 extends upwardly through an opening between the two bottom plates 13 of the cabinet and carries at its upper end an electrode 35 herein shown as of frusto-conical shape formed of sheet metal and serving as a support for an article 36 to be coated. In the example shown herein the article is in the form of a flowerpot and may be of non-conducting material, such as ceramic ware.

At each end of the cabinet close to the floor there are mounted a pair of rods 37 suitably supported in fittings 38 and each having mounted thereon one or more slidable fittings 39. Said fittings 39 may be secured at any desired place along the rods 37 by means of thumb screws 40 and each of said fittings is adapted to receive a vertical rod 41. Fittings 42 are carried by the vertical rods 41 and are similar to the fittings 39. Said fittings 42 carry horizontal rods 43 adapted to support spray guns 44. Said spray guns may be of a well known commercial form and are connected by tubing 45 to a suitable source of a coating material of siccative nature such as paint, lacquer or enamel and a source of compressed air for atomization. By means of this construction the spray guns may be positioned as desired adjacent either end of the cabinet. In the arrangement shown in the drawing two such guns are used at one end of the cabinet and are located to direct a spray 46 of coating material in the general direction of the opposite end of the cabinet. One of said guns is positioned on each side of the path of movement of the articles 36 through the cabinet. Preferably all or a part of the supporting structure for the guns is formed of insulating material and the tubing 45 is also of non-conducting material. The guns are, therefore, isolated from the electrical apparatus

and do not impart any electrical charge to the spray particles nor tend to attract stray particles of the coating material.

On each of the side walls 11 of the cabinet there is mounted a pair of tubular insulating members 47 extending inwardly toward the path of travel of the articles 36. An electrode 48 in the form of a fine wire is strung between the inner ends of each of the insulators 47 and extends generally parallel to the path of travel of the articles. Each of said electrodes extends outwardly through one or both of the insulators 47 and is connected by a conductor 49 to one terminal of an electrical generating apparatus 50 shown diagrammatically in Fig. 2. The opposite terminal of said apparatus is connected by a conductor 51 to a pair of wires 52 (Fig. 4), which extend longitudinally beneath the floor of the cabinet and are supported on spring clips 53 carried by the cabinet floor. The wires 52 are adapted to engage the vertical rods 39 in their travel through the cabinet and thus serve to make an electrical connection between the generating apparatus 50 and each of the electrodes 38. Preferably the generating apparatus is adapted to supply direct current with a voltage of the order of 100,000 volts. The discharge electrodes 48 are preferably connected to the negative terminal and the collecting electrodes 38 to the positive terminal. By this means an electrostatic field of high intensity is set up between the discharge electrodes 48 and the collecting electrodes 38. Since the discharge electrodes 48 have an extremely small surface area as compared to the total surface area of the collecting electrodes 38 presented thereto, the last named electrodes exert a more powerful attractive effect on the spray particles than do the electrodes 48. The tendency of the discharge electrodes 48 to collect spray particles is further diminished by the fact that they are located at the extreme edge of the normal path of the spray from the guns 44 or completely out of said path.

By means of the arrangement of the spray guns just described, the path of the spray and the path of the articles 36 is such that both small and large spray particles lose their initial velocities at points adjacent to the path of travel of the article. Thus there is always an electrically charged article reasonably close to exert an attractive effect on each slowly moving particle. The efficiency of the paint collection is, therefore, immensely increased over that of any arrangement in which the spray is directed substantially at right angles to the path of travel of the articles. The velocity of spray is normally adjusted so that none of the spray particles pass beyond the confines of the cabinet. It is immaterial in which end of the cabinet the spray guns are mounted. In fact, one may be mounted in one end and the other in the opposite end. Such an arrangement is beneficial in certain installations. Where only one side of each article is to be coated only one gun and one discharge electrode may be required. In other cases, such as for larger objects, more than one gun may be required on each side of the conveyor.

It is to be noted particularly that the articles to be coated need not be electrical conductors. When said articles are so placed as to mask the collecting electrode so that the electrostatic field must pass through the article, the efficiency of the collecting electrode is not materially impaired. Paint which is attracted by the collecting electrode is then deposited on the outer surface of the article. It is not necessary in all cases that the collecting electrodes be carried by the conveyor and act as supports for the articles. Where only one side of an article is to be coated it may be advantageous in some cases to mount a collecting electrode in a stationary position on the side of the conveyor opposite to the discharge electrode. Such an arrangement is illustrated in Fig. 7 in which an object 136 to be coated on one side only is in the form of a thin plate of non-conducting material. Said object is carried by a support 133 which may be mounted in the carrier 29 in the same manner as the rod 33 previously shown. The discharge electrode may be in the form of a metallic point 148 mounted on the end of one of the insulators 47. The collecting electrode is shown as a plate 138 carried on a similar support on the opposite side of the path of travel of the article 136. The spray gun 44 discharges the paint spray into the space between the discharge electrode and the object. In apparatus of this kind it is advantageous to move the conveyor intermittently, stopping each of the objects 136 between the electrodes for a sufficient length of time to receive a thorough coating of paint.

For objects not placed too closely together on the conveyor, the electrical attraction is sufficient to give a relatively uniform coating on all sides of the articles, even though the articles are not turned during their movement while subjected to the spray. For articles of this type and for other articles where the spray is to be applied to one side only, there is provided a construction as shown in Fig. 6 of the drawings. Each of the sprockets 31 is provided with a suitable opening in which there is inserted a pin 60, the lower end of which is received in an opening in the adjacent link of the chain 16. The pin, therefore, prevents the articles from turning during their travel through the cabinet.

When the articles on the conveyor are spaced relatively close together it is desirable that they be slowly rotated in their movement through the cabinet to insure uniform coating. For this purpose mechanism shown particularly in Figs. 3 and 4 is provided. In this construction there is provided a pair of brackets 64 secured to the plate 18, one of which brackets serves as a bearing for a vertical stub shaft 62 and the other for a similar stub shaft 63. A sprocket chain 64 is trained about a pair of sprockets 65 and 66 carried by said stub shafts. The chain 64 is of the proper pitch to mesh with the sprockets 31 carried by the carrier units 28. A plate 67 rests on brackets 68 and a bracket 69 secured to the plate 18. The edges of said plate 67 engage the inner and outer runs of the chain 64 which is preferably a roller chain adapted to run smoothly on said edges. By movement of the plate 67 toward or away from the conveyor 16 the chain 64 may be brought into and out of mesh with the sprockets 31.

The plate 67 has secured thereto a vertical pin 70 extending downwardly through a slotted opening 71 in the bracket 69 and having secured thereto a T-fitting 72. A stud 73 is threaded in the outlet of said T-fitting and is connected to a rod 74 by a pipe union 75. Said union is loosely adjusted so that the rod 74 may be rotated without rotating the stud 73 and the threaded connection 76 therein is soldered to prevent the union becoming unscrewed in its movement. The outer end of the rod 74 is guided in a bracket 77 secured to the bracket 69. A washer 78 is

carried by the rod 74 and is held in place thereon by a pin 78. A compression spring 80 is interposed between said washer and the bracket 77 and normally urges the rod 74 and associated parts to the left in Fig. 4 to keep the chain 64 in engagement with sprockets 31. The yielding pressure of the spring permits the chain to give slightly if the teeth of the sprockets do not initially engage the chain at the proper point.

The outer end of the rod 74 is provided with a T-fitting 81, in one run of which there is secured a downwardly extending handle 82 and the other of which carries a stud 83. A detent 84 is secured to a portion of the cabinet in position to engage the stud 83. A guide pin 85 secured to the bracket 69 operates in a slotted opening 86 in the plate 67 and serves to guide the movement of the same. By means of this construction, the spring 80 normally presses the plate 67 against the inner run of the chain 64 and holds said chain in engagement with the sprockets 31. By means of the handle 82 and the rod 74 may be rotated so that the stud 83 clears the detent 84, the rod may then be drawn to the right in Fig. 4 and the stud 83 returned to its vertical position outside of the detent 84. In this movement the plate 67 is moved to the right in Fig. 4 and disengages the chain 64 from the sprockets 31 and the detent 84 engages the stud 83 to retain the parts in this position.

A variable speed motor 87 is connected through a reduction gear unit 88, a pulley 89 and a belt 90 to a pulley mounted on the stub shaft 32 and thus serves to move the chain 64. When the motor 87 is run at the proper speed to operate the chain 64 at the same speed as the conveyor chain 15, no rotation of the articles on the conveyor is produced. By increasing the speed of the motor 87, rotation of the articles is effected in one direction, and by reducing the speed, the direction of rotation may be reversed. Any suitable speed of rotation of the articles may thus be produced by slight variations in the speed of motor 87. Of course when rotation of the articles is to be produced the pins 68 are withdrawn.

The foregoing specification describes the invention in one of its preferred forms. It is apparent however that variations in one or more of the elements of the invention are necessary for the coating of articles of different sizes and shapes. Articles of conducting material serve as their own collecting electrodes and do not require additional collecting electrodes of large size, such as shown herein. With the high voltages used in the method, certain articles not ordinarily classed as conductors actually possess sufficient conducting power to be efficient electrodes in themselves. For example, small panels of wood have been successfully painted without the use of additional electrodes. Some articles are of such shape that they cannot be efficiently sprayed with the spray guns located as shown herein. With such articles it may even be necessary to direct the spray at right angles to their path of travel. However, even with such an arrangement of the guns other features of the invention specified in the claims are applicable.

The invention claimed is:

1. A method of coating articles, comprising the creation of an electrostatic field of definite length and breadth, continuously passing a series of the articles to be coated in spaced relation along the longitudinal center line of said field, and projecting a spray of siccative coating material from one end and exteriorly of said field into the latter roughly parallel and at an acute angle to the said longitudinal center line and with a force insufficient to project the spray beyond the opposite end of the field.

2. A method of coating articles, comprising the creation of an electrostatic field of definite length and breadth, continuously passing a series of the articles to be coated in spaced relation along the longitudinal center line of said field, and projecting a spray of siccative coating material from one end and exteriorly of said field into the latter roughly parallel and at an acute angle to the said longitudinal center line, the length of the field being greater than the projection of the spray.

HAROLD P. RANSBURG.
HARRY J. GREEN.

497

Oct. 1, 1957 C. C. SIMMONS 2,808,343

METHOD AND APPARATUS FOR SPRAY COATING OF ARTICLES

Filed March 5, 1952 4 Sheets-Sheet 1

Fig. 2.

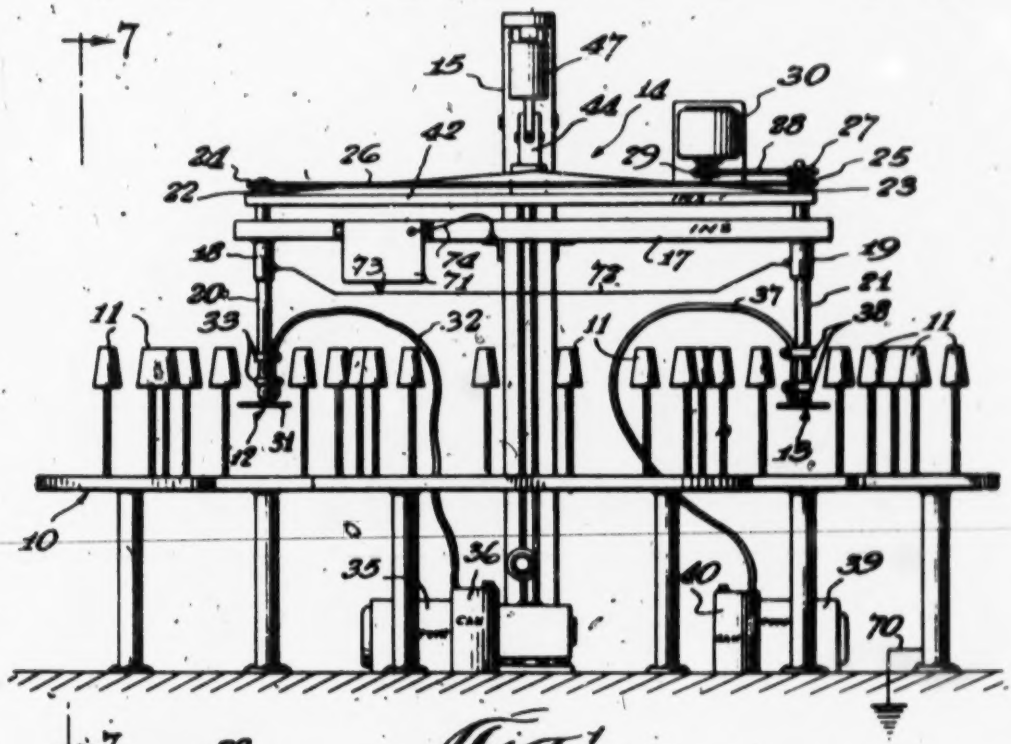

Fig. 1.

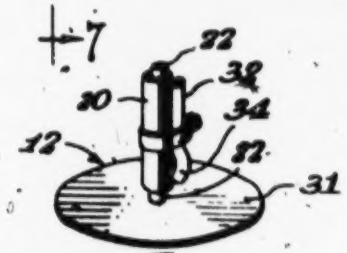

Fig. 3.

Inventor
Charles Curtis Simmons
By
Schroeder, Merriam, Hoffman & Brady
attorneys

Oct. 1, 1957 C. C. SIMMONS 2,808,343

METHOD AND APPARATUS FOR SPRAY COATING OF ARTICLES

Filed March 5, 1952 4 Sheets-Sheet 2

Fig. 1.

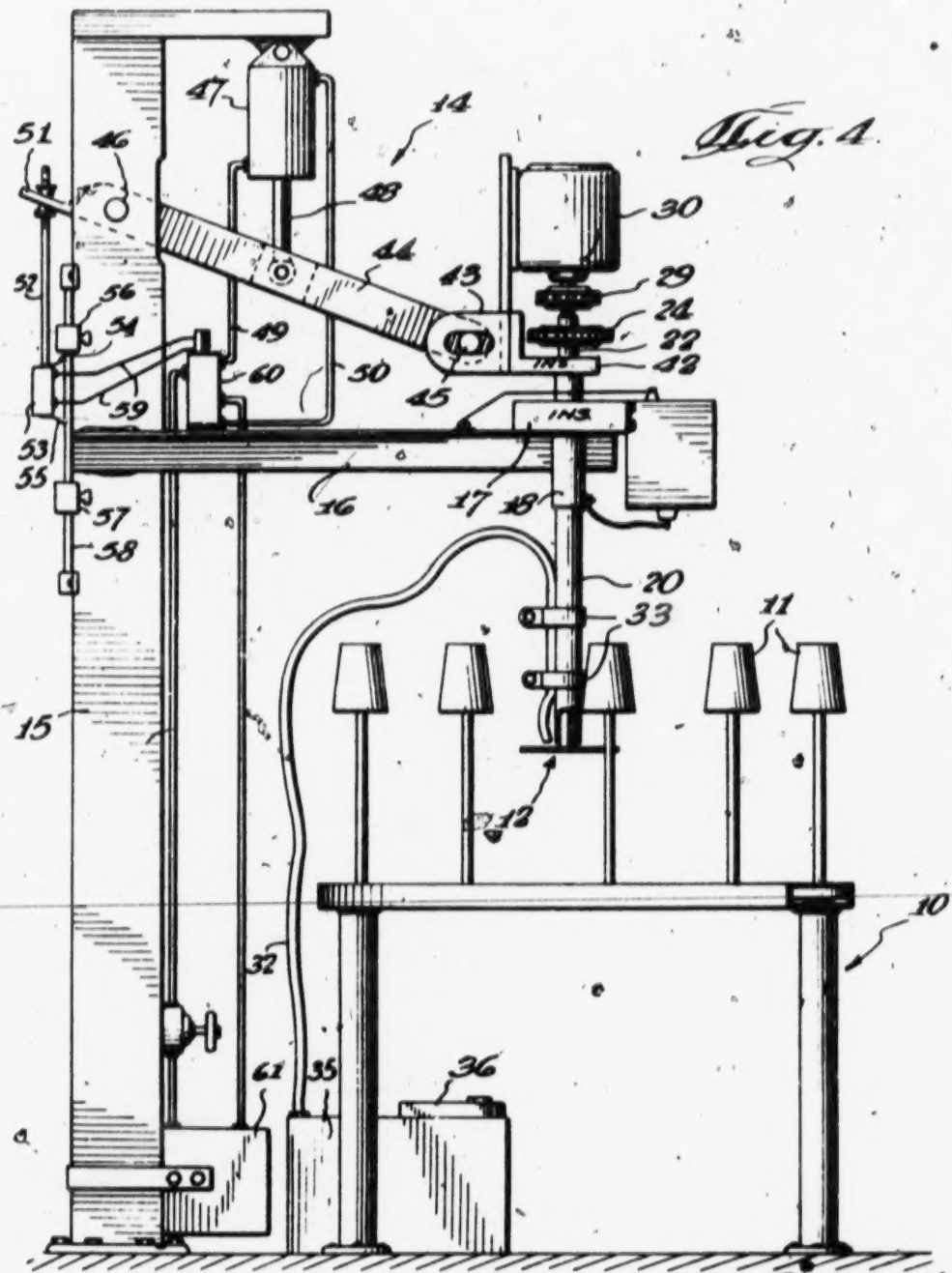

Inventor

Charles Curtis Simmons

By Eckhardt, Morrison, Hoffman & Brady

Attorneys

Oct. 1, 1957 C. C. SIMMONS 2,808,343

METHOD AND APPARATUS FOR SPRAY COATING OF ARTICLES

Filed March 5, 1952 4 Sheets-Sheet 3

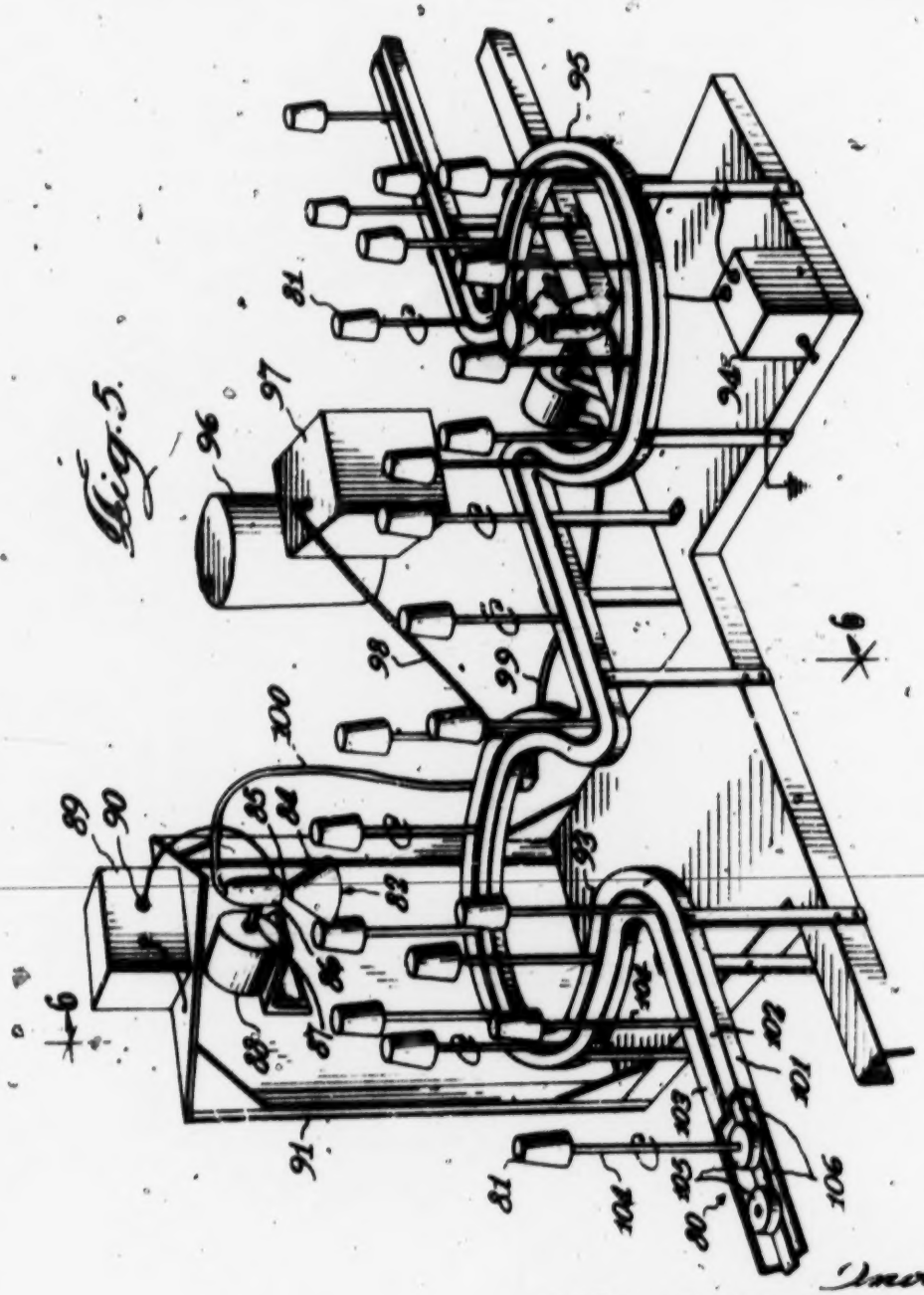

Fig. 5.

Inventor
Charles Curtis Simmons
By Schroeder, Merriam, Hofgren & Bra
Attorneys

503

Oct. 1, 1957 C. C. SIMMONS 2,808,3

METHOD AND APPARATUS FOR SPRAY COATING OF ARTICLES

Filed March 5, 1952 4 Sheets-Shee

Fig. 9.

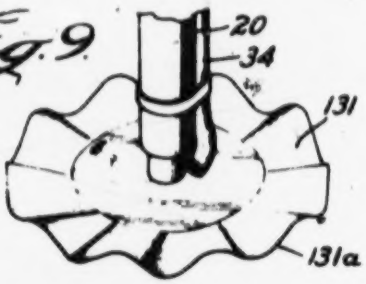

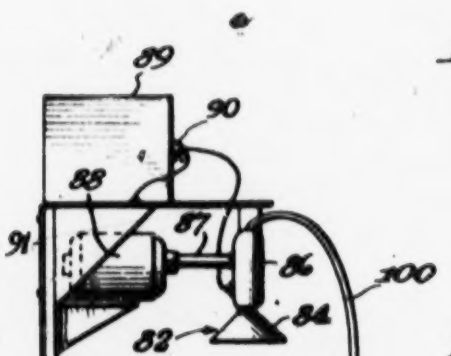

Fig. 6.

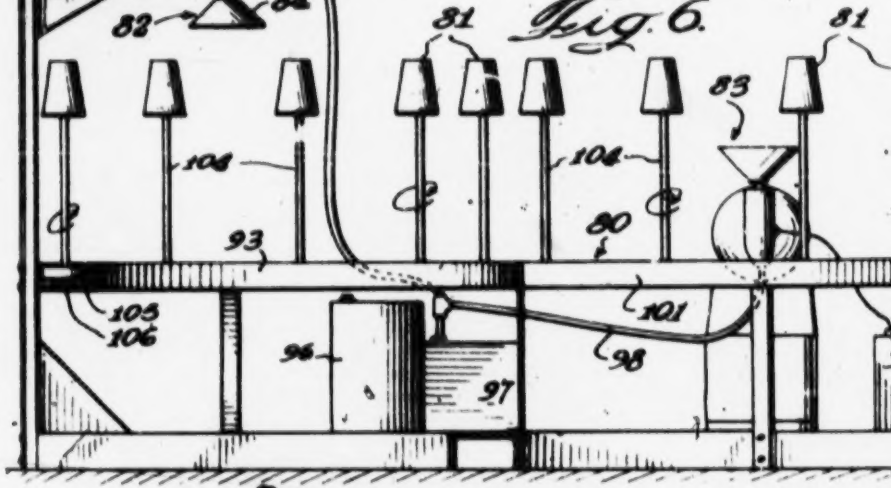

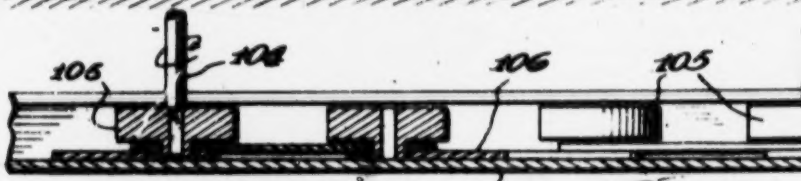

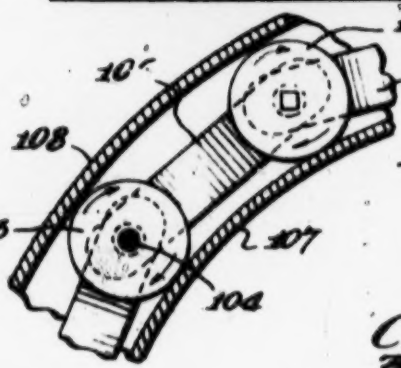

Fig. 7.

Fig. 8.

Inven

Charles Curtis Simm

By

Schroeder, Merriam & Hoffman &

attor

United States Patent Office

2,808,343

Patented Oct. 1, 1957

2,808,343

METHOD AND APPARATUS FOR SPRAY COATING OF ARTICLES

Charles Curtis Simmons, Elgin, Ill., assignor to Ransburg Electro-Coating Corp., a corporation of Indiana

Application March 5, 1953, Serial No. 274,969

21 Claims. (Cl. 117—93)

This invention relates to the spray coating of articles and more particularly to coating apparatus and coating methods to be used in electrostatic coating systems.

In a majority of electrostatic coating systems a field of electrostatic force is set up which includes the article being coated and the atomized coating material particles in movement toward such article. Deposition of the atomized particles is primarily the result of electrostatic forces and the particles are given an electrostatic charge at the time they leave the atomizing or spraying device or shortly thereafter. Where the articles to be coated are of conducting material, it has been the natural commercial practice to mount the articles on a grounded conveyor and thus to make the articles themselves an electrode at ground potential. Another electrode at high electrical potential is provided with this electrode sometimes being the spraying device and sometimes being a separate electrode near or past which the sprayed particles pass in their movement toward the article.

Where the spraying device is one of the electrodes in an electrostatic field and where atomization of the coating material is accomplished without the aid of compressed air, it has been found that the spray of atomized coating material particles takes a rather definite pattern which depends at least partially on the shape of the atomizing means. Thus, where the highly efficient atomizing head of the type shown in the co-pending application of E. M. Ransburg, Serial No. 143,994, filed February 13, 1950, is used, the natural pattern of the spray is annular in shape, that is, if a rotating bell-type head of the type shown in said Ransburg application is positioned with its axis of rotation vertically arranged and coating material is supplied to the head for coating a flat sheet located beneath the head, the spray pattern on the sheet would be generally in the form of a circle. In the coating of such sheets, of course, relative motion is produced between the head and the sheet so as to apply a homogeneous film of coating material thereover. Where articles having a diameter less than the diameter of the spray pattern are to be coated, a more difficult problem arises. If a group of small articles is to be coated and is passed in linear array beneath a coating head of the bell-type previously mentioned, the articles would be passed through only a portion of the natural pattern of the spray, and while the electrostatic forces present would be sufficient to pull in most of the particles out of the natural pattern and onto the article, some over-spray or loss of coating material may occur.

One of the features of the present invention is the provision of an electrostatic coating system wherein the articles to be coated are carried along through the natural pattern of the atomizing means for an appreciable distance and therefore over-spray is prevented.

A further feature of the invention is the provision of an electrostatic coating system wherein an atomizing device having a natural spray pattern which is annular in shape is employed to supply the atomized coating material particles and wherein the articles to be coated are moved in a path a substantial portion of which is circular and coincides with the natural annular pattern. By so moving the articles relative to the natural pattern of the atomizing device, substantially all of the coating material atomized is deposited or precipitated on the article by the electrostatic forces employed and little material is lost through over-spray even if the articles are small.

Another feature of the present invention is the provision of a modified form of atomizing means which can be simply and inexpensively constructed and yet which is quite efficient in operation. The preferred form of such modified atomizing means is a flat, circular disk of sheet metal or the like which is rotated about its center at a speed sufficient to spread coating material delivered to the surface of the disk at or near its axis of rotation into a thin film outwardly to the edges of the disk for atomization from an atomizing zone adjacent the disk edge. If desired, the disk itself may be maintained at high electrical potential relative to the articles and thus form one of the electrodes in the electrostatic coating field. If such a disk type atomizing head is employed in a coating system wherein the articles are moved past and into field-creating relationship with the head along a path which lies in the plane of rotation of the disk, it will be realized that both of any centrifugal forces acting upon the coating material and the electrostatic forces which serve to deposit the coating material on the articles will operate in parallel, that is in substantially the same direction so that the force of one supplements or augments the force of the other.

A further feature of the invention contemplates the use of a disk-type atomizing head of the type described in the preceding paragraph in an electrostatic coating system wherein the articles to be coated are moved in a semicircular path around the head and in the plane of rotation thereof. The result of such a system is to produce a highly efficient coating apparatus which possesses the additional advantage of permitting slower feeds of coating material to the head without the necessity of the additional use of solvents to prevent hardening or stiffening of the coating material before it is deposited on the articles. This latter advantage is believed to be due to the fact that the rotation of the disk speeds the coating material rapidly to the edge thereof for atomization so that any particular portion of the film of coating material on the surface of the disk remains exposed to the air only for a relatively short period of time, and thus retains the solvents normally present therein.

As a corollary feature of the invention, there is provided a system wherein small articles which are to be coated on their sides, top and bottom are moved into field-creating relationship with two atomizing means, one positioned above the plane of movement of the articles and the other positioned below such plane. The two atomizing means employed may be vertically spaced from one another and both operated as the articles pass in a circular path through the natural pattern of each atomizing means although it is preferred to move the articles in two such semicircular paths, one through the natural pattern of an atomizing means placed above such path and the other through the pattern of a second atomizing means located below such path. By utilizing this type of apparatus and method, an adequate covering of all portions of the article by the coating material can be achieved and the coating material is not concentrated along the areas of the article nearest the atomizing means while producing an insufficient coating on other areas of the article as might otherwise occur if only one atomizing means were employed.

While as previously discussed above, an adequate coating of material can be applied to the top, bottom and sides of small articles by the use of two atomizing

means, it has also been discovered that a single atomizing means can be employed to achieve a similar result if the atomizing means is moved or reciprocated relative to the articles during their passage through the coating zone. Thus, the atomizing means may be reciprocated in a direction axial of the annular spray pattern so that deposition is effected over the entire article surface in desired manner even though the extent of the article is such as to exceed the spray pattern width at the coating zone. Therefore, another feature of the invention is the provision of means for reciprocating the atomizing means during the passage of an article through the coating zone so as to apply a uniform coating of the material on all portions of the article.

Another feature of the invention is the provision of control means for a reciprocating type of atomizing means as described in the previous paragraph which serves to control the length of the reciprocating stroke of the atomizing means together with readily adjustable means for varying the length of this stroke and for variably determining the top and bottom limits of the stroke.

Other and further features of the invention will be readily apparent from the following description and drawings, in which:

Fig. 1 is a front elevational view of an apparatus embodying the invention;

Fig. 2 is a top plan view somewhat schematic in character showing the path of movement of the articles in the apparatus illustrated in Fig. 1;

Fig. 3 is an enlarged, detailed view of a disk-like atomizing means forming a part of the invention;

Fig. 4 is a side elevational view of the apparatus shown in Fig. 1;

Fig. 5 is a perspective view of a modified form of apparatus;

Fig. 6 is a vertical sectional view along line 6—6 of Fig. 5;

Fig. 7 is a vertical, sectional, detailed view of the conveyor mechanism;

Fig. 8 is a horizontal, sectional view of the apparatus shown in Fig. 7; and

Fig. 9 is an enlarged detailed view of an alternative form or disk-like atomizing means forming a part of the invention.

While several forms of apparatus are illustrated in the accompanying drawings and will be described hereafter as providing means for practicing the present invention, it will be understood that these are representative embodiments only. It will also be understood that forms of spraying devices other than the particular atomizing devices shown may be utilized and that other apparatus may be employed for accomplishing the purposes and for practicing the methods of the invention, and it is to be understood that other embodiments may be utilized without departing from the contemplated scope of the present invention, and that no limitations are to be implied from the specific description now provided.

Referring now to Fig. 1, there is shown a conveyor 10 provided with means for carrying a plurality of articles 11 in a semicircular path around a first atomizing means 12 and thence around a second atomizing means 13. The atomizing means are mounted for vertical reciprocation on a support generally designated 14.

The support 14 includes an upstanding, fixed column 15, preferably of channel iron construction, to which is secured a horizontally extending angle arm 16 to the outer end of which is fixed a horizontally extending bracket 17 made of Bakelite or other insulating material. The bracket 17 is provided adjacent its outer ends with a pair of metallic sleeves 18 and 19, each of which slidably carries a hollow metal support rod 20 and 21. Rotatably mounted within the support rods are a pair of metal drive shafts 22 and 23. Pulleys 24 and 25 are fixed to the upper ends of the drive shafts 22 and 23, respectively, and a V-belt 26 passes around each of the pulleys to connect the shafts 22 and 23 for rotation together. A second pulley 27 is secured to the shaft 23 and carries a V-belt 28 which passes around a pulley 29 fixed to the drive shaft of a driving electric motor 30. From the foregoing description it will be clear that energization of the motor 30 serves through the drive belts and pulleys just described to rotate each of the shafts 22 and 23.

The lower end of each of the shafts carries the atomizing means which, in the embodiment illustrated in Figs. 1 and 3, takes the form of a thin, flat, circular disk 31 of sheet metal. A flexible tubing 32 of plastic, rubber or other insulating material is secured by means of a pair of brackets 33 to the support rod 20 with the end 34 of the tubing opening to the upper surface of the disk 31 adjacent its center and with the other end being connected to a pump 35 which draws coating material from a container 36 and delivers it to the upper surface of the disk. A similar tubing 37 is attached by brackets 38 to the support column 21 and to a second pump 39 in turn connected to a second source of coating material 40 for delivering coating material to the upper surface of the disk comprising the atomizing means 13. Both of the tubings 32 and 37 may be connected to a single pump if both atomizing means are to coat the articles with the same material; however, as it is possible to achieve some drying between the time the articles are coated as they pass adjacent the atomizing means 12 and until they are moved into depositing relationship with the atomizing means 13, it becomes possible to apply a prime coat with the first atomizing means and a finish coat with the second atomizing means, and obviously if such an operation is contemplated, separate pumps and supplies of coating material will be required for each atomizing means.

The degree of fineness of the particles of coating material atomized may be varied by changing the speed of rotation of the disc. Thus as the speed of rotation is increased, the particle size decreases. Preferably with a disc of from four to eight inches in diameter the speed of rotation thereof is from 1500 to 2000 R. P. M. With finer particle size, each particle has less inertia and thus more loses the force of centrifuge. Because of this, less voltage is required to effect deposition. In a system with an eight inch disc rotating at 1500 to 2000 R. P. M. at about nineteen inches from the articles, voltages of from 25,000 to 90,000 volts may be used without decreasing the efficiency of deposition and, of course, with increased safety to personnel.

As previously mentioned, means are provided for reciprocating the atomizing means vertically as the articles 11 are moved along the conveyor. For this purpose the upper ends of the hollow support columns 20 and 21 are carried in a cross bar 42 made of insulating material in turn supported by means of a slotted bracket 43 on the outer end of an arm 44. The arm carries at one end a pin 45 slidable in the slot in the bracket with the other end of the arm being pivotally mounted at 46 on the support 15. A pneumatic piston and cylinder device 47 is provided with a piston rod 48 connected at one end to the piston and at the other end to the arm 44. Means in the form of conduits 49 and 50 are provided for supplying air under pressure alternately to opposite ends of the piston and cylinder device to reciprocate the piston therein, and thus to swing the arm 44 about its pivot 46. Such swinging movement of the arm is of course accompanied by vertical movement of the support bar 42 to which the arm is connected and thus reciprocates the atomizing means 12 and 13 vertically during the coating operation.

Inasmuch as the articles 11 may vary from job to job in over-all size and shape, means are provided for regulating both the length of the stroke of the reciprocating means and the points to which the reciprocal motion of the atomizing means are reversed. To this end the arm

44 is extended so as to have an integral portion 51 extending beyond the pivot point 46, which portion carries a rod 52 which in turn carries a microswitch 53 provided with the upper and lower contacts 54 and 55 adapted to contact dogs 56 and 57 adjustably positioned on a rod 58 attached to the support 18. The microswitch is provided with suitable connections 59 to an electrically operated valve 60 which controls the introduction of compressed air into the conduits 49 and 50 from the air pump 61. As the arm 54 is pivoted downwardly the microswitch 53 is moved upwardly until its upper contact 54 makes contact with the dog 56. Such contact serves to reverse the valve 60 so as to pivot the arm in the reverse direction until the microswitch contacts the lower dog 57. By shifting the dogs both the length of the stroke of the atomizing means and the point of reciprocation may readily be adjusted even during the coating operation.

The width of the spray pattern may be increased even without reciprocating the discs by providing the discs with a corrugated or "pie crust" edge. A disk 131 with one form of a corrugated or "pie crust" edge 131*a* is shown in Fig. 9. Thus an eight inch disc may be provided with three quarter inch hammered corrugations along its edge and such corrugations will widen the pattern band to about ten inches at approximately nineteen inches from the axis of rotation of the disc. Similarly, the disc may be mounted on the shaft at an angle of other than 90 degrees relative thereto so as to produce a wobble plate or the axis of the shaft itself may be tilted with respect to the plane of the path of movement of the articles (or the path may be tilted with respect to the axis of the shaft), in either case to widen the effective coverage of the spray pattern.

The conveyor is grounded as indicated at 70 and each of the atomizing means is maintained at a high electrical potential relative to ground by means of a power pack 71 fixed to the bracket 17. Each of the sleeves 18 and 19 is connected to an electrical wire 72 in turn connected to the hot terminal 73 of the power pack, the other terminal of which is grounded on the support 15 as indicated at 74.

By referring to Fig. 2, it will be noted that the articles 11 are carried by the conveyor in an arcuate path (exceeding a semicircle) around each of the atomizing means. The path is in the annular patterns of each of the atomizing devices and inasmuch as the articles are spaced radially outwardly from the discs in their plane of rotation, both the electrostatic forces existing between the discs and the grounded articles and any centrifugal force exerted on the coating material as it issues out on the upper surface of the disc and atomizes from the edge thereof operate in parallel to direct the material outwardly toward the articles. During their travel around the atomizing means the articles themselves are rotated so that all sides thereof are presented a number of times toward the atomizing means. Many forms of conveying devices, such as the one hereinafter to be described, may be utilized for producing such movement of the articles.

A somewhat modified form of apparatus is shown in Fig. 5 which includes a conveyor 80 for conveying a plurality of articles 81 around a first atomizing means 82 and thence around a second atomizing means 83. The atomizing means are of the type shown and described in the said application of E. M. Ransburg, and include a bell-type head 84 fixed to a hollow shaft 85 rotatably supported in a housing 86. Beveled gears within the housing are rotated by means of a drive shaft 87 made of insulating material and connected to a driving motor 88. A power pack 89 has its hot terminal 90 connected to the housing with the opposite terminal being grounded to a metallic support 91 which supports both the motor and the power pack.

It will be noted that the atomizing means 82 is fixed relative to the path of movement of the articles, that is, does not reciprocate as did the atomizing means in the previous embodiment, but is positioned above the articles and the path of movement in the arcuate portion 93 of the conveyor is such as to carry the articles 81 in a path which is a portion of a circle lying within the natural annular pattern of the atomizing means. Thus, the articles are carried in a path which is parallel to the center line of the pattern, which in this case is again annular, and the atomizing means is so positioned that the width of the pattern does not exceed a few times the maximum dimension of the article surface transverse to its direction of movement. Thus, in the specific embodiment illustrated, the atomizing means 82 is so positioned that the width of its natural pattern approximates, but in any event is not many times greater than, the vertical length of the articles 81.

The second atomizing means 83 is constructed similarly to the means 82 but is positioned below the articles and connected to a power pack 94 to maintain the atomizing means at a high electrical potential relative to the grounded articles. That portion of the conveyor 95 adjacent the second atomizing means is again arcuate so that the articles 81 in traveling around the second atomizing means again are moved in a portion of a circular path conforming or coinciding with the natural pattern of the second atomizing means. By so positioning the atomizng means and so carrying the articles therearound, both the top, bottom and sides of the article are provided with an adequate covering of the coating material. Thus, the atomizing means 82 serves to deposit coating material on the top and sides of the article while the second atomizing means 83 coats the bottom and sides of the article. As both atomizing means are employed to apply a single coating to the articles, a common source of coating material supply 96 may be used together with a pump 97 for supplying coating material to a feed pipe 98 in turn connected to insulated tubing 99 and 100 connected to the interior of the hollow shafts 85 of the atomizing devices.

While as previously noted, many forms of conveyor devices may be used, the particular one illustrated comprises a channel member 101 formed with spaced integral flanges 102 and 103 along its upper side. Metallic rods 104 carry the articles 81 at their upper end and extend downwardly through the space between the flanges and are secured in rollers 105. The rollers are rotatably mounted upon links 106 which are pivotally connected together at the location of the rollers as shown in Fig. 8. At the curved portion of the conveyor track around each of the atomizing means the rollers 105 contact the sides 107 or 108 of the track to rotate the rollers and hence the support rods and articles during the time the actual coating deposition is taking place. As no coating occurs during the time that the articles are traveling along the straight portion of the conveyor track it is immaterial whether or not the rollers are brought into contact with the sides of the channel to rotate the articles.

While I have shown and described certain embodiments of my invention, it is to be understood that it is capable of many modifications. Changes, therefore, in the construction and arrangement may be made without departing from the spirit and scope of the invention as disclosed in the appended claims:

I claim:

1. Apparatus for coating a plurality of articles from exteriorly thereof, comprising: a spraying device for providing an expanding spray of coating material radiating from said device as a center conveyor means including a plurality of spaced article-supports for bodily transporting said articles and positioning them in spaced relation within at least a portion of the spray pattern and along a predetermined arcuate path concave toward the axis of said spraying device, said conveyor means being so constructed and arranged that a plurality of article-supports simultaneously lie within said arcuate path and in said spray pattern; and means for creating an electrostatic charge differential between the spray pat- tes

and the articles electrostatically to deposit the particles on the articles.

2. Apparatus of the character described in claim 1, in which said spraying device comprises a rotatably mounted disc provided with an edge having portions in different axial spaced planes whereby rotation of the disc provides a relatively wide spray pattern.

3. Apparatus for coating a plurality of articles from exteriorly thereof, comprising: a spraying device for providing a spray of coating material expanding radially from a source; a conveyor for bodily transporting said articles successively within the spray along a curved path concave toward said spraying device and through a substantial portion of the spray and for individually rotating them during such movement; means for creating an electrostatic charge differential between the spray particles and the articles electrostatically to deposit the particles on the articles; and motor means for automatically reciprocating the spraying device normal to the general direction of spray movement during the coating, said movement having an extent sufficient to coat all portions of articles having a maximum dimension greater than the width of said spray pattern.

4. Apparatus of the character claimed in claim 3, wherein the spraying means moves the full extent of its travel during movement of a given article within the spray, and wherein the article is rotated more than once during such movement.

5. A method for providing a relatively wide coverage of a spray pattern in an electrostatic coating system, comprising: projecting spray particles radially from a source in a pattern expanding generally in a single plane; carrying articles to be coated in a curved path at least partially around the source and through said spray pattern; creating an electrostatic charge differential between the spray particles and the articles in said path electrostatically to deposit the particles on the articles; and maintaining said path as it passes through said spray pattern at an acute angle to the plane of said radially expanding pattern.

6. A method for electrostatically coating a plurality of articles, comprising: providing from a source exterior of the article a spray of coating material in a pattern extending radially from said source; bodily transporting said articles successively through said spray pattern in an arcuate path generally concentric with said source and through at least a substantial portion of the spray pattern; and creating an electrostatic charge differential between the spray particles and the articles electrostatically to deposit the particles on the articles while still in liquid state.

7. A method for coating a plurality of articles, comprising: providing from a source exterior of the article a spray of coating material in a pattern entirely around said source; bodily transporting said articles successively through said spray pattern in an arcuate path generally concentric with the source and through at least a substantial portion of the spray pattern while moving said spray pattern axially; and creating an electrostatic charge differential between the spray particles and the articles electrostatically to deposit the particles on the articles while still in liquid state.

8. Apparatus for electrostatically coating a plurality of articles comprising a rotatably mounted disk, means for supplying liquid coating material to the disk inwardly of the edge thereof, means for rotating the disk to move the material radially to an atomizing zone adjacent the edge of the disk for atomization and centrifugal projection from said atomizing zone in the form of finely divided particles, means for bodily transporting articles in path portions on opposite sides of the disk and in the plane thereof, and means for creating an electrostatic charge differential between the atomized particles and the article.

9. Apparatus for electrostatically coating a plurality of articles comprising a rotatably mounted atomizing member, means for supplying coating material to a surface of said member, means for rotating the member to move the coating material radially over said surface to an atomizing zone adjacent the edge of the surface for atomization and centrifugal projection from said atomizing zone in the form of finely divided particles, conveyor means for bodily transporting said articles and arranged to position articles substantially entirely around said atomizing member with at least some of said articles being in the plane of the edge, and means for creating an electrostatic charge differential between the atomized particles and the articles.

10. Apparatus for coating a plurality of articles from exteriorly thereof, comprising: a rotatable spraying device for providing a spray of coating material moving outwardly in an expanding pattern; conveyor means including a plurality of spaced article-supports for bodily transporting said articles successively in spaced relation within at least a portion of the spray pattern and along a predetermined arcuate path concave toward the axis of said spraying device, said conveyor means being so constructed and arranged that a plurality of article-supports simultaneously lie within said arcuate path and in said spray pattern; and means for creating an electrostatic charge differential between the spray particles and the articles electrostatically to deposit the particles on the articles.

11. Apparatus for coating a plurality of articles from exteriorly thereof, comprising: a rotatable atomizing device for providing a spray of coating material radiating therefrom in an expanding pattern; a conveyor for bodily transporting said articles successively within the spray along a path having portions on opposite sides of and substantially equidistantly spaced from and in the plane of rotation of the atomizing portion of said device, and through at least a substantial portion of said spray and for individually rotating them during such movement; and means for creating an electrostatic charge differential between the spray particles and the articles electrostatically to deposit the particles on the articles.

12. Apparatus for coating a plurality of articles from exteriorly thereof, comprising: a spraying device for providing a radially expanding spray of coating material; a conveyor for bodily transporting said articles successively within the spray along a curved path concave toward said spraying device and through a substantial portion of said spray; means for creating an electrostatic charge differential between the spray particles and the articles electrostatically to deposit the particles on the articles; and means for moving the spraying device normal to the general radial direction of spray movement during the coating.

13. Apparatus for coating a plurality of articles from exteriorly thereof, comprising: a rotatably mounted atomizing device having a circular edge; means for supplying liquid coating material to a surface of the device; means for rotating the device to move the coating material fed thereto to the edge for atomization therefrom as a spray expanding radially from the axis of rotation of the device; a conveyor for bodily transporting said articles successively within the spray along a curved path concave toward said atomizing device and through at least a substantial portion of the spray; means for creating an electrostatic charge differential between the spray particles and the articles electrostatically to deposit the particles on the articles; and means for reciprocating the atomizing device parallel to its axis of rotation during the coating.

14. Apparatus of the character described in claim 13, including a motor for continuously reciprocating said device during the coating and a control for said motor including a pair of electrical switch means; switch operating means, one of said means being movable in accordance with axial movement of the device; and means for readily adjusting the relative positions of said switch means and switch operating means to adjust the extent of reciprocation of said device.

15. A method for providing a relatively wide coverage of an annular spray pattern in an electrostatic coating sys-

tem, comprising: projecting spray particles radially in an expanding disc-like pattern; carrying articles to be coated in a path having portions on generally opposite sides of the axis of the pattern and in the plane of the spray particle projection; said path portions being of greater length than the transverse extent of the spray pattern; and creating an electrostatic charge differential between the spray particles and the articles electrostatically to deposit the particles on the articles.

16. A method for electrostatically coating a plurality of articles from exteriorly thereof comprising carrying the articles to be coated in a curved path, projecting an expanding spray of liquid coating material particles from a source located substantially at the center of curvature of said path, said projection being generally toward the articles on said curved path, and creating an electrostatic charge differential between the spray particles at said source and the articles electrostatically to deposit particles thereon.

17. A method for electrostatically coating articles from exteriorly thereof comprising moving a plurality of articles to be coated to positions in a curved path, providing a source of liquid spray particles adjacent the center of curvature of the path, moving said source about said center, while issuing spray particles therefrom to create an expanding spray of coating material particles projected generally toward the articles in said curved path, and creating an electrostatic charge differential between said source and the articles electrostatically to deposit particles thereon.

18. A method for electrostatically spray coating articles from exteriorly thereof comprising projecting an expanding spray of liquid coating material particles from a source, bodily, and sequentially transporting the articles in a looped path to simultaneously position a plurality of such articles around and substantially equidistant from said source, said spray projection being generally toward the articles, and creating an electrostatic charge differential between the spray particles and the articles electrostatically to deposit particles thereon while still in liquid state.

19. In a method of electrostatically spray-coating articles from exteriorly thereof with an expanding annular spray of electrically charged particles moving outwardly away from a central axis through the region therearound, the steps of maintaining the articles at a particle-attracting potential and moving them sequentially through the spray over a path spaced outwardly from said central axis and extending circumferentially relative to said axis, said path having within the spray a total linear extent greater than the diameter of the spray at the location of said path.

20. A method for electrostatically spray coating a plurality of articles from exteriorly thereof comprising, providing an electrode, bodily and sequentially transporting articles in a looped path to simultaneously position a plurality of such articles around and substantially equidistant from said electrode, creating an electrostatic field extending between said electrode and said articles, and introducing atomized liquid coating material particles into said field for movement from adjacent said electrode to the articles to be electrostatically deposited thereon while maintaining the articles around said electrode, simultaneously to apply coating material to said articles.

21. Apparatus for coating a plurality of articles from exteriorly thereof, comprising a spraying device for providing an expanding spray of coating material radiating from said device as a center; conveyor means including a plurality of spaced article-supports for bodily transporting said articles and positioning them in spaced relation within at least a portion of the spray pattern and along a predetermined arcuate path concave toward the axis of said spraying device, said conveyor means being so constructed and arranged that a plurality of article-supports simultaneously lie within said arcuate path and in said spray pattern; and means for maintaining a substantial difference of electrical potential between the articles on said conveyor and said spraying device to cause electrical charging of the spray particles and deposition of the charged particles on the articles.

References Cited in the file of this patent

UNITED STATES PATENTS

1,022,956	Lengerke	Apr. 9, 1912
1,577,531	Lambert	Mar. 23, 1926
1,832,096	Chaffee	Nov. 17, 1931
2,049,940	Barthel	Aug. 4, 1936
2,185,570	Ridley	Jan. 2, 1940
2,187,306	Formhals	Jan. 6, 1940
2,231,324	Crompton	Feb. 11, 1941
2,334,648	Ransburg	Nov. 16, 1943
2,438,561	Kearsley	Mar. 30, 1948
2,456,853	Arbron	Dec. 21, 1948
2,559,225	Ransburg	July 3, 1951
2,568,611	Crouse	Sept. 18, 1951
2,598,466	Tuttle	May 27, 1952
2,685,536	Starkey	Aug. 3, 1954

OTHER REFERENCES

No. 2 Electrostatic Process, Ransburg Electro Coating Corp., 1951, 12 pp.

LE COPY

VOLUME IV

TRANSCRIPT OF RECORD

Supreme Court of the United States

OCTOBER TERM, 1960

No. 501

BINKS MANUFACTURING CO.,
PETITIONER,

vs.

RANSBURG ELECTRO-COATING CORPORATION.

ON WRIT OF CERTIORARI TO THE UNITED STATES COURT OF APPEALS
FOR THE SEVENTH CIRCUIT

PETITION FOR CERTIORARI FILED OCTOBER 24, 1960

CERTIORARI GRANTED DECEMBER 19, 1960

SUPREME COURT OF THE UNITED STATES

OCTOBER TERM, 1960

No. 501

BINKS MANUFACTURING CO.,
PETITIONER,

vs.

RANSBURG ELECTRO-COATING CORPORATION.

ON WRIT OF CERTIORARI TO THE UNITED STATES COURT OF APPEALS FOR THE SEVENTH CIRCUIT

INDEX

	Original	Print
Proceedings in the United States Court of Appeals for the Seventh Circuit		
Appendix to brief for plaintiff-appellant, Volumes I and II, see separate indices		
Appendix to brief for defendant-appellee, Volume III, see separate index		
Record from the United States District Court for the Southern District of Indiana, Indianapolis Division	511	511
Excerpt of transcript of testimony of Emery P. Miller on redirect examination	512	511
Plaintiff's Exhibit IIIII—Judgment in the case of U.S. v. Minnesota Mining and Manufacturing Co. et al., C.A. 8119 filed in the U.S.D.C. for the District of Massachusetts, dated November 6, 1950	514	512
Plaintiff's Exhibit JJJJJ—United States Letters Patent	536	533

Number	*Issued*	*Title*		
RE20,660	Feb. 22, 1938	Method of Coating and Apparatus Therefor and Product	536	533
2027087	Jan. 7, 1936	Abrasive Sheet and Process of Making the Same	548	545

RECORD PRESS, PRINTERS, NEW YORK, N. Y., FEBRUARY 21, 1961

		Original	Print
Record from the United States District Court for the Southern District of Indiana, Indianapolis Division—Continued			
Plaintiff's Exhibit JJJJJ—United States Letters Patent—Continued			
Number	*Issued*	*Title*	
2027308	Jan. 7, 1936	Manufacture of Abrasive Articles	551	548
2027309	Jan. 7, 1936	Abrasive Material	554	551
2082182	June 1, 1937	Manufacture of Abrasive Articles	562	559
2245301	June 10, 1941	Manufacture of Abrasive Articles	565	562
2279361	April 14, 1942	Electrostatic Coating Process	569	566
2287837	June 30, 1942	Method and Apparatus for Applying Coating Materials	574	571
2318570	May 4, 1943	Manufacture of Abrasives	584	581
2318571	May 4, 1943	Manufacture of Abrasives	600	597
2328577	Sept. 7, 1943	Process and Apparatus for Grading and for Coating with Comminuted Materials	614	611
2376342	May 22, 1945	Manufacture of Abrasives	625	622
Defendant's Exhibit 5A (Excerpts)			637	634
Page 10 of Applicant's Amendment filed June 28, 1945			637	634
Pages 14 and 29 of Applicant's Board of Appeals Brief filed January 5, 1951			638	635
Defendant's Exhibit 5B (Excerpts)			640	637
Affidavit of Gilbert Isgrigg filed March 20, 1953			640	637
Affidavit of Donald C. Howarth filed March 20, 1953			643	640
Page 15 of Applicant's Board of Appeals Brief filed May 25, 1953			646	643
Page 5 of Board of Appeals decision dated December 18, 1953			647	644
Defendant's Exhibit 6 (Excerpt)			649	645
Amendment C, filed August 3, 1956			649	645
Defendant's Exhibit 21—United States Letters Patent			652	649
Number	*Issued*	*Title*	
1854071	April 12, 1932	Method of Manufacturing Abrasives	652	649
2047525	July 14, 1936	Insulating Method for Electrical and Thermo-Technical Purposes, and Apparatus for Accomplishing the Same	657	654

			Original	Print
Record from the United States District Court for the Southern District of Indiana, Indianapolis Division—Continued				
Defendant's Exhibit 21—United States Letters Patent—Continued				
Number	*Issued*	*Title*		
2087260	July 20, 1937	Homogenous Piled Surface	662	659
2152077	March 28, 1939	Production of Piled Surfaces in Pattern Form	666	663
2166385	July 18, 1939	Determining Electrical Characteristics	676	673
2173032	Sept. 12, 1939	Production of Pile Surfaced Materials	680	677
2173078	Sept. 12, 1939	Production of Piled Surfaces	690	687
2174328	Sept. 26, 1939	Piled Surface in Pattern Form	697	694
2217126	Oct. 8, 1940	Piled Surface in Pattern Form	702	699
2218445	Oct. 15, 1940	Production of Pile Surface Materials	711	708
2222539	Nov. 19, 1940	Method of and Apparatus for Making Pile-Surfaced Sheets	715	712
2223476	Dec. 3, 1940	Method for Making Pile Fabrics	721	718
2231324	Feb. 11, 1941	Apparatus for and Method of Making Hat Bats	728	725
2248064	July 8, 1941	Coating, Particularly for Manufacture of Abrasives	732	729
2248853	July 8, 1941	Abrasive Article and Method of Making Same	748	745
2281558	May 5, 1942	Manufacture of Abrasive Articles and Apparatus Therefor	763	760
2356489	Aug. 22, 1944	Apparatus for Coating	774	771
2370636	March 6, 1945	Manufacture of Abrasives	787	784
2371605	March 20, 1945	Coating, Particularly for Manufacture of Abrasives	800	797
2376343	May 22, 1945	Manufacture of Abrasives	815	812
2376922	May 29, 1945	Method of and Apparatus for Making Pile Fabrics	824	821
2447374	Aug. 17, 1948	Method of Applying Coating Materials	833	830
Opinion, Castle, J.			841	838
Judgment			855	852
Clerk's certificate (omitted in printing)			856	852
Order allowing certiorari			857	853

[fol. 511] [File endorsement omitted]

12737

IN THE UNITED STATES DISTRICT COURT
SOUTHERN DISTRICT OF INDIANA

INDIANAPOLIS DIVISION

No. IP 56-C-262

BINKS MANUFACTURING COMPANY, Plaintiff,

vs.

RANSBURG ELECTRO-COATING CORPORATION, Defendant.

Before the

HON. CALE J. HOLDER

[fol. 512]

Transcript of Testimony—December 19, 1958

Indianapolis, Indiana
December 19, 1958
9:50 o'clock, A. M.

(The Court met pursuant to adjournment and the trial was resumed as follows:)

• • • • • • •

[fol. 513] Redirect Examination of Mr. Miller.

Questions by Mr. Hume:

• • • • • • •

Q. Now, in answer to one of Mr. Meroni's questions, with respect to the character of the defendant's Exhibit No. 2, commercial system, using the rotary heads, for instance, as exemplified by Exhibit 17-B, you stated in answer to one of his questions that something more than electrostatic force was needed to paint in this system, and he made reference to the rotation of centrifugal force of the head.

Is your answer there in any way— Does it modify in any way your previous statement that the electrostatic field effects the atomization, dispersion, and deposition?

Mr. Meroni: Objected to as leading. He is attempting to get the witness to change his testimony in a leading question, your Honor.

The Court: The objection will be overruled.

A. It does not, sir. My understanding is that the rotation is necessary for carrying or feeding the coating material from the source to the site of atomization.

[fol. 514]

IN THE UNITED STATES DISTRICT COURT
FOR THE SOUTHERN DISTRICT OF INDIANA,
INDIANAPOLIS DIVISION

Plaintiff's Exhibit IIIII.

IN THE UNITED STATES DISTRICT COURT.
For the District of Massachusetts.

United States of America, *Plaintiff*, *vs.* Minnesota Mining and Manufacturing Company, Behr-Manning Corporation, The Carborundum Company, Armour and Company, Durex Abrasives Corporation and The Durex Corporation, *Defendants.*	Civil Action No. 8119

FINAL JUDGMENT AS TO COUNT ONE.

The plaintiff, United States of America, having filed its amended complaint herein on July 5, 1949; the defendants having appeared and filed their separate answers to Count

One of the amended complaint denying any violation of law; Count Two of the amended complaint having been tried and final judgment having been entered thereon on September 13, 1950; and the plaintiff and said defendants, by their respective attorneys herein, having severally consented to the entry of this Final Judgment as to Count One without trial or adjudication of any issue of fact or law herein, and without admission by any party in respect of any such issue,

Now, Therefore, before any testimony or evidence has been taken herein, and without trial or adjudication of any issue of fact or law herein, and upon consent as aforesaid of all of the parties hereto,

[fol. 515] It Is Hereby Ordered, Adjudged and Decreed, as to Count One of the amended complaint as follows:

I.

This Court has jurisdiction of the subject matter hereof and of all parties hereto. Count One of the amended complaint states a cause of action against the defendants under Sections 1 and 2 of the Act of Congress of July 2, 1890, entitled "An Act to Protect Trade and Commerce against Unlawful Restraints and Monopolies," as amended.

II.

For purposes of this judgment,

A. "Minnesota" means the defendant Minnesota Mining and Manufacturing Company, a corporation organized and existing under the laws of the State of Delaware;

B. "Behr-Manning" means the defendant Behr-Manning Corporation, a corporation organized and existing under the laws of the State of Massachusetts;

C. "Carborundum" means the defendant The Carborundum Company, a corporation organized and existing under the laws of the State of Delaware;

D. "Armour" means the defendant Armour and Company, a corporation organized and existing under the laws of the State of Illinois;

E. "Defendants" means Minnesota, Behr-Manning, Carborundum and Armour;

F. "Coated Abrasive Products" means any non-rigid abrasive or polishing article which comprises a flexible sheet or sheetlike backing to one or both [fol. 516] surfaces of which there is attached by an adhesive a coating of one or more layers of abrasive or polishing grain, including rigid or non-rigid abrading or polishing articles made therefrom to be used for abrading or polishing purposes;

G. "Defined Patents" means United States letters patent, patent applications and rights under letters patent, as follows:

(1) all letters patent, rights under letters patent, and applications for letters patent, now owned or controlled by any of the defendants, and all letters patent which may issue on or result from said applications,

(2) all letters patent, rights under letters patent, and applications for letters patent, issued to, acquired, or filed by, any of the defendants during the five years following the date of the entry of this judgment, and all letters patent which may issue on or result from said applications,

(3) all divisions, continuances, reissues, or extensions of the patents and applications described above in clauses (1) and (2),

relating to Coated Abrasive Products and any method, material, equipment or process involved in the production or manufacture of Coated Abrasive Products.

III.

The provisions of this judgment applicable to any defendant shall apply to such defendant, its successors, subsidiaries, assigns, officers, directors, agents, employees and all

other persons acting or claiming to act under, through or for such defendant.

[fol. 517] IV.

Each of the patent license and cross license agreements relating in whole or in part to Coated Abrasive Products or any method, material, equipment or process involved in the production or manufacture of Coated Abrasive Products, to which any of the defendants is presently a party as licensor, including, but without limitation, the following agreements, is hereby terminated and canceled in its entirety; and each of the defendants is hereby enjoined and restrained from the further performance or enforcement of any of said agreements, or from entering into, adopting, adhering to, or furthering any agreement, arrangement, or course of conduct for the purpose or with the effect of maintaining, reviving or reinstating any of said agreements:

A. the Patent License Agreements Relating to Waterproof Sandpaper, dated as of June 1, 1949, between Minnesota, as licensor, and Armour, Behr-Manning, and Carborundum, as licensees, respectively;

B. the Patent License Agreements Relating to Electrocoated Sandpaper between Behr-Manning, as licensor, and

(1) Minnesota, as licensee, dated September 19, 1932,

(2) Armour, as licensee, dated October 13, 1932, and

(3) Carborundum, as licensee, dated January 11, 1933,

each as amended by letter dated May 19, 1948;

C. the licenses granted by the Spraying Agreement dated December 6, 1935 between Armour, Behr-Manning, Carborundum and Minnesota;

[fol. 518] D. the licenses granted by the Mechanical Orienting Agreement dated March 6, 1936 between

Armour, Behr-Manning, Carborundum and Minnesota;

E. the Cross License Agreements dated as of March 17, 1943, as modified as of October 1, 1945, by and between Minnesota and Armour, Minnesota and Behr-Manning and Minnesota and Carborundum, Armour and Behr-Manning, Armour and Carborundum, and Behr-Manning and Carborundum, respectively;

F. the license agreements entered into by the defendants pursuant to said Cross License Agreements, as follows:

(1) the Adhesive Treatment License Agreements between Behr-Manning, as licensor, and

(a) Armour and Minnesota, as licensees, respectively, dated January 1, 1944,

(b) Carborundum, as licensee, dated May 1, 1945,

(c) Midwest Abrasive Company, as licensee, dated September 12, 1946;

(2) the license agreements under United States Letters Patent No. 2,358,724, dated as of January 1, 1945, between Behr-Manning, as licensor, and Armour, Carborundum and Minnesota, as licensees, respectively;

(3) the license agreements under United States Letters Patent No. 2,286,208, between Carborundum, as licensor, and

(a) Minnesota, as licensee, dated August 1, 1949,

[fol. 519] (b) Armour, as licensee, dated February 1, 1950, and

(c) Behr-Manning, as licensee, dated August 1, 1949,

(4) the license agreements under United States Letters Patent No. 2,430,099 between Carborundum, as licensor, and

(a) Minnesota, as licensee, dated November 1, 1948,

(b) Armour, as licensee, dated March 23, 1950,

(c) Behr-Manning, as licensee, dated November 1, 1948; and

(d) Mid-West Abrasive Company, as licensee, dated March 24, 1950;

(5) the license agreements under United States Letters Patent No. 2,391,731 between Minnesota, as licensor, and

(a) Carborundum, as licensee, dated August 1, 1946, and

(b) Behr-Manning, as licensee, dated September 1, 1948, and

(6) the license agreements under United States Letters Patent Nos. 2,184,896, 2,302,711 and 2,333,035, dated as of October 1, 1945, between Behr-Manning, as licensor, and Armour and Carborundum, as licensees, respectively.

[fol. 520] V.

Each defendant is hereby ordered and directed:

A. In so far as it now has or may acquire the power or authority to do so, to issue to any applicant (including any other defendant) making written request therefor a non-exclusive and unrestricted license or sublicense to make, use and vend Coated Abrasive Products under any, some or all of the Defined Patents, including those presently owned or controlled by defendants as listed in Schedule "A" attached hereto, without any condition or restriction whatsoever, except that:

(1) a reasonable and non-discriminatory royalty may be charged and collected;

(2) reasonable provision may be made for periodic inspection of the books and records of the licensee by an independent auditor who may report to the defendant licensor only the amount of the royalty due and payable and no other information;

(3) the license may be non-transferable;

(4) reasonable provision may be made for cancellation of the license upon failure of the licensee to pay the royalties or to permit the inspection of its books and records as provided in Paragraph A of this Section V;

(5) the license must provide that the licensee may cancel the license at any time by giving thirty (30) days' notice in writing to the licensor.

B. Within thirty (30) days after the date of application, issuance or acquisition of any of the Defined Patents, to advise this Court and the At-[fol. 521] torney General, in writing, of the number and date of such application, issuance or acquisition.

C. Upon any application for a license in accordance with the provisions of Paragraph A of this Section V, the defendant to whom such application is made shall advise the applicant of the royalty it deems reasonable for the Defined Patent or Patents to which the application pertains. If the defendant and the applicant are unable to agree upon what constitutes a reasonable royalty, the defendant may apply to this Court for a determination of a reasonable royalty, giving notice thereof to the applicant and the Attorney General, and shall make such application forthwith upon request of the applicant. In any such proceeding the burden of proof shall be upon the defendant to whom application is made to establish, by a fair preponderance of evidence, a reasonable royalty, and the Attorney

General shall have the right to be heard thereon. Pending the completion of any such court proceeding, the applicant shall have the right to make, use and vend under the Defined Patent or Patents to which its application pertains, without the payment of royalty or other compensation, but subject to the following provisions: Such defendant may, with notice to the Attorney General, apply to the Court to fix an interim royalty rate pending final determination of what constitutes a reasonable royalty. If the Court fixes such interim royalty rate, a license shall then issue providing for the periodic payment of royalties at such interim rate from the date of the making of such application by the applicant; [fol. 522] and whether or not such interim rate is fixed, any final order may provide for such readjustments including retroactive or diminished royalties as the Court may order after final determination of a reasonable and non-discriminatory royalty.

D. Each license granted pursuant to this Section V shall provide that the licensee may at any time, without revoking or surrendering its license, dispute the validity, scope or enforceability of any of the patents under which the license is granted, and this judgment shall not be construed as importing any validity or value to any of such patents.

VI.

Each defendant is hereby enjoined and restrained from:

A. Making any disposition of any of the Defined Patents which deprives it of the power or authority to issue licenses or sublicenses required by Paragraph A of Section V unless it sells, transfers or assigns such Defined Patents and requires, as a condition of such sale, transfer or assignment that the purchaser, transferee, or assignee thereof shall observe the provisions of Section V of this judgment with respect to the Defined Patents so acquired and the purchaser, transferee or assignee shall file with this Court, prior to the consummation of said transac-

tion, an undertaking to be bound by the provisions of Section V of this judgment with respect to the Defined Patents so acquired.

B. Acquiring any license, sublicense, grant of immunity or similar right under any Defined Patent to make, use and vend Coated Abrasive Products, [fol. 523] unless such license, sublicense, grant of immunity or similar right is non-exclusive and contains a provision that throughout its life the licensor will make available an equivalent license, sublicense, grant of immunity or similar right to any third person requesting the same, on terms and conditions at least as favorable as those accorded to said defendant.

VII.

Each defendant is hereby ordered and directed, on written request, to furnish to any licensee at the time of granting a license under Paragraph A of Section V of this judgment, upon payment of a purely nominal charge therefor, a written manual or manuals describing all the methods, processes, materials and equipment then currently used by it in commercial production or manufacture under the Defined Patents under which such applicant is licensed. Any such manual or manuals so furnished to a licensee shall be made available to all prior licensees under the same Defined Patents, excepting the other defendants herein. In the event any such licensee shall find the information set forth in any such manual inadequate to enable successful utilization by that licensee of any of the methods, processes, materials or equipment described therein, and such licensee shall so inform in writing the defendant concerned, then such defendant is ordered and directed to furnish promptly, at the actual cost thereof to the defendant, such additional written information or technical assistance as shall be reasonably necessary to the successful utilization thereof. Any such additional written information shall be made available to all other licensees under the same Defined Patents, excepting the other defendants herein.

[fol. 524]

VIII.

Subject to the provisions of Section VII of this judgment, each defendant is hereby enjoined and restrained from furnishing to any other defendant technical information relating to the production or manufacture of Coated Abrasive Products or methods, equipment, materials and processes to be used in the manufacture thereof, unless it furnishes such technical information to any other manufacturer of Coated Abrasive Products upon reasonable and non-discriminatory terms and conditions.

IX.

Each defendant is hereby enjoined and restrained from entering into, adhering to, maintaining or furthering any combination, conspiracy, contract, agreement, understanding, plan or program, directly or indirectly, with any other manufacturer of Coated Abrasive Products:

A. To fix, maintain, stabilize, determine or adhere to prices, discounts, customer classifications or other terms or conditions for the sale of Coated Abrasive Products;

B. To limit, restrict, prevent or restrain any manufacturer of Coated Abrasive Products from making or selling any kinds, types, sizes, styles, or grades of Coated Abrasive Products, or from manufacturing or producing any Coated Abrasive Products according to any standards or specifications;

[fol. 525]

X.

Nothing contained herein shall be deemed to adjudicate, determine, or affect the legality or illegality of any agreement involving relationships solely between:

A. A defendant and its subsidiaries;

B. A defendant or its subsidiaries and its parent;

C. Subsidiaries of any defendant and their subsidiaries.

XI.

For the purpose of securing compliance with this judgment and for no other purpose, duly authorized representatives of the Department of Justice shall, upon written request of the Attorney General, or an Assistant Attorney General, and on reasonable notice to any defendant, made to its principal office, be permitted subject to any legally recognized privilege, (1) access during the office hours of said defendant to all books, ledgers, accounts, correspondence, memoranda, and other records and documents in the possession or under the control of said defendant relating to any matters contained in this judgment, and (2) subject to the reasonable convenience of said defendant and without restraint or interference from it to interview officers or employees of said defendant, who may have counsel present, regarding any such matters, and (3) upon request the defendant shall submit such reports in writing to the Department of Justice with respect to matters contained in this judgment as may from time to time be necessary to the enforcement of this judgment. No information obtained by the means provided in this Section XI shall be divulged by any representative of the Department of Justice to any person other than a duly authorized representative of such Department, except in the course of legal pro- [fol. 526] ceedings to which the United States is a party for the purpose of securing compliance with this judgment or as otherwise required by law.

XII.

Jurisdiction is retained for the purpose of enabling any of the parties to this judgment to apply to this Court at any time for such further orders and directions as may be necessary or appropriate for the construction or carrying out of this judgment or for the modification or termination of any of the provisions thereof, and for the purpose of the enforcement of compliance therewith and the punishment of violations thereof.

Dated: Boston, Mass.
November 6, 1950.

Myzanski,
United States District Judge.

Schedule "A".

[fol. 527]

Defined Patents Owned or Controlled by the Defendants.

Patent No.	Dated	Inventor/s
Armour and Company Patents:		
1,991,645	Feb. 19, 1935	Woodward
1,994,263	Mar. 12, 1935	Woodward
2,050,212	Aug. 4, 1936	Rizor
2,347,244	Apr. 25, 1944	Colt
Behr-Manning Corporation Patents:		
1,987,467	Jan. 8, 1935	Crupi
2,027,087	Jan. 7, 1936	Buckner
Reissue 20,660) Original 2,027,307)	Jan. 7, 1936	Schacht
2,027,308	Jan. 7, 1936	Schacht
2,027,309	Jan. 7, 1936	Schacht
2,082,182	June 1, 1937	Schacht
Reissue 21,852) Original 2,123,581)	July 12, 1938	Anderson
2,124,055	July 19, 1938	Courtney
2,130,753	Sept. 20, 1938	Baker
2,136,150	Nov. 8, 1938	Oglesby
2,173,129	Sept. 19, 1939	Oglesby
2,173,130	Sept. 19, 1939	Oglesby
2,173,796	Sept. 19, 1939	Oglesby
2,175,073	Oct. 3, 1939	Amstuz
2,184,896	Dec. 26, 1939	Oglesby
2,197,741	Apr. 16, 1940	Boucher
2,198,766	Apr. 30, 1940	Gallagher
2,199,752	May 7, 1940	Oglesby
2,209,715	July 30, 1940	Crupi
2,209,716	July 30, 1940	Crupi

Patent No.	Dated	Inventor/s
2,217,247	Oct. 8, 1940	(Walker (Burns
2,217,525	Oct. 8, 1940	Oglesby
2,239,828	Apr. 29, 1941	Oglesby
[fol. 528]		
2,245,301	June 10, 1941	Schacht
2,279,361	Apr. 14, 1942	Amstuz
2,287,837	June 30, 1942	Smyser
2,288,624	July 7, 1942	Holmsten
2,288,625	July 7, 1942	Holmsten
2,292,991	Aug. 11, 1942	Crompton
2,294,064	Aug. 25, 1942	Amstuz
2,302,711	July 24, 1942	(Oglesby (Strain
2,305,157	Dec. 15, 1942	Ham
2,307,232	Jan. 5, 1943	Oglesby
2,318,570	May 4, 1943	Carlton
2,318,571	May 4, 1943	Carlton
2,322,156	June 15, 1943	Oglesby
2,328,577	Sept. 7, 1943	Oglesby
2,333,034	Oct. 26, 1943	(Oglesby (Reilly (Gilbert
2,333,035	Oct. 26, 1943	Oglesby
2,339,208	Jan. 11, 1944	Ban der Pyl
2,358,724	Sept. 19, 1944	Manchester
2,370,636	Mar. 6, 1945	Carlton
2,375,813	May 16, 1945	Oglesby
2,375,814	May 15, 1945	Oglesby
2,376,342	May 22, 1945	Carlton
2,376,343	May 22, 1945	Carlton
2,403,018	July 2, 1946	Oglesby
2,456,985	Dec. 21, 1948	Oglesby
2,463,241	Mar. 1, 1949	Carlton

Patent No.	Dated	Inventor/s
2,463,242	Mar. 1, 1949	Carlton
2,485,765	Oct. 25, 1949	Oglesby
Behr-Manning Corporation Patent Applications:		
733,614	Mar. 10, 1947	Waterfield
761,750	July 18, 1947	(Webber (Timmer

[fol. 529]

The Carborundum Company Patents:

1,941,962	Jan. 2, 1934	Tone
1,944,898	Jan. 30, 1934	McKee
1,988,065	Jan. 15, 1935	Wooddell
1,989,742	Feb. 5, 1935	Davis
1,994,283	Mar. 12, 1935	Martin
2,015,658	Oct. 1, 1935	Bazzenberger
2,033,991	Mar. 17, 1936	(Melton (Benner
2,035,521	Mar. 31, 1936	(Benner (Melton (Kirchner
2,049,535	Aug. 4, 1936	(Benner (Kirchner (Melton
2,050,992	Aug. 11, 1936	Aust
2,053,360	Sept. 8, 1936	(Benner (Melton
2,053,361	Sept. 8, 1936	(Benner (Melton
2,059,583	Nov. 3, 1936	(Jackson (Kirchner
2,071,549	Feb. 23, 1937	Mahlman
Reissue 21,552) Original 2,078,831)	Apr. 27, 1937	(Benner (Melton

Patent No.	Dated	Inventor/s
2,082,916	June 8, 1937	Stratford
2,097,806	Nov. 2, 1937	Weidrich
2,108,645	Feb. 15, 1938	Bryant
2,111,006	Mar. 15, 1938	Robie
2,111,272	Mar. 15, 1938	Paulson
2,115,904	May 3, 1938	Bryant
2,124,666	July 26, 1938	(Benner (Melton
2,128,905	Sept. 6, 1938	(Benner (Melton
2,128,906	Sept. 6, 1938	(Benner (Melton
2,128,907	Sept. 6, 1938	(Benner (Melton
[fol. 530]		
2,128,966	Sept. 6, 1938	Robie
2,129,661	Sept. 13, 1938	Ball
2,129,954	Sept. 13, 1938	(Martin (Upper (Aust
2,130,194	Sept. 13, 1938	Robie
2,138,882	Dec. 6, 1938	Robie
2,141,658	Dec. 27, 1938	(Melton (Benner (Kirchner
2,152,392	Mar. 28, 1939	Tone
2,179,487	Nov. 14, 1939	(Benner (Robie
2,184,348	Dec. 26, 1939	(Kirchner (Melton (Benner
2,187,624	Jan. 16, 1940	(Melton (Benner (Kirchner

Patent No.	Dated	Inventor/s
2,187,743	Jan. 23, 1940	(Kirchner (Wooddell
2,191,827	Feb. 27, 1940	(Benner (Melton
2,194,253	Mar. 19, 1940	(Benner (Melton (Kirchner
2,194,472	Mar. 26, 1940	Jackson
2,201,194	May 21, 1940	(Melton (Benner (Kirchner
2,201,195	May 21, 1940	(Melton (Benner (Kirchner
2,201,196	May 21, 1940	Williamson
2,205,276	June 18, 1940	Robie
2,209,059	July 23, 1940	Kirchner
2,209,074	July 23, 1940	Dahlstrom
2,215,210	Sept. 17, 1940	Dahlstrom
2,219,853	Oct. 29, 1940	Tone
[fol. 531]		
2,223,392	Dec. 3, 1940	Smith
2,224,009	Dec. 3, 1940	Aust
2,225,877	Dec. 24, 1940	(Melton (Kirchner
2,225,937	Dec. 24, 1940	Williamson
2,227,200	Dec. 31, 1940	Robie
2,229,490	Jan. 21, 1941	(Benner (Melton (Kirchner
2,233,175	Feb. 25, 1941	(Melton (Benner
2,250,119	July 22, 1941	Williamson
2,252,587	Aug. 12, 1941	(Tone (Martin

Patent No.	Dated	Inventor/s
2,254,016	Aug. 26, 1941	(Melton (Benner (Kirchner
2,254,531	Sept. 2, 1941	(Kirchner (Melton (Benner
2,255,294	Sept. 9, 1941	(Melton (Benner (Kirchner
2,274,726	Mar. 3, 1942	Melton
2,276,328	Mar. 17, 1942	(Melton (Benner (Kirchner
2,277,520	Mar. 24, 1942	(Martin (Foss
2,280,852	Apr. 28, 1942	Robie
2,286,208	June 16, 1942	Kirchner
2,288,649	July 7, 1942	Robie
2,298,318	Oct. 13, 1942	Stratford
2,309,305	Jan. 26, 1943	(Dahlstrom (Horne
2,317,650	Apr. 27, 1943	Stratford
2,320,139	May 25, 1943	Kirchner
2,321,422	June 8, 1943	Robie
2,324,426	July 13, 1943	Robie
[fol. 532]		
2,324,427	July 13, 1943	Robie
2,327,218	Aug. 17, 1943	Robie
2,337,445	Dec. 21, 1943	Buell
2,339,500	Jan. 18, 1944	Martin
2,349,365	May 23, 1944	(Martin (Aust
2,350,861	June 6, 1944	(Argy (Foss

Patent No.	Dated	Inventor/s
2,351,716	June 20, 1944	Smith
2,366,926	Jan. 9, 1945	Melton
2,378,025	June 12, 1945	(Melton (Thompson
2,402,183	June 18, 1946	(Rowe (Goepfert
2,410,506	Nov. 5, 1946	(Kirchner (Ball
2,412,599	Dec. 17, 1946	Buell
2,430,099	Nov. 4, 1947	Bradley
2,431,035	Nov. 18, 1947	(Goepfert (Buell
2,431,258	Nov. 18, 1947	Kirchner
2,445,807	July 27, 1948	(Summers (Corse
2,452,793	Nov. 2, 1948	Robie
2,457,256	Dec. 28, 1948	(Melton (Benner (Kirchner
2,468,056	Apr. 26, 1949	(Goepfert (Robie
2,490,231	Dec. 6, 1949	(Robie (Ball
2,497,469	Feb. 14, 1950	Robie

The Carborundum Company Patent Applications:

142,524	Feb. 4, 1950	(Foss (Buell
186,052	Sept. 21, 1950	(Goepfert (Canfield

[fol. 533]

345,596	July 15, 1940	(Tone (Martin
469,232	Dec. 16, 1942	Robie
559,429	Oct. 19, 1944	Robie

Patent No.	Dated	Inventor/s
610,479½	Aug. 13, 1945	(Melton (Benner (Kirchner
758,282	July 1, 1947	(Robie (Mahlman

Minnesota Mining and Manufacturing Company Patents:

2,013,925	Sept. 10, 1935	Okie
2,025,249	Dec. 24, 1935	Shuey
2,030,743	Feb. 11, 1936	Carlton
2,169,277	Aug. 15, 1939	Okie
2,176,942	Oct. 24, 1939	Redman
2,186,001	Jan. 9, 1940	Bartling
2,188,341	Jan. 30, 1940	(Elbel (Seebach
2,197,629	Apr. 16, 1940	Bartling
2,202,765	May 28, 1940	Guth
2,219,263	Oct. 22, 1940	Okie
2,219,278	Oct. 22, 1940	Okie
2,220,140	Nov. 5, 1940	Bartling
2,226,553	Dec. 31, 1940	Cross
2,230,934	Feb. 4, 1941	(Carlton (Oakes
2,236,597	Apr. 1, 1941	Hatch
2,248,064	July 8, 1941	(Carlton (Miller
2,248,853	July 8, 1941	(Carlton (Miller
2,269,415	Jan. 6, 1942	(Netherly (Anderson (Cross
2,269,416	Jan. 6, 1942	(Netherly (Anderson (Cross

Patent No.	Dated	Inventor/s
2,281,558 [fol. 534]	May 5, 1942	Cross
2,287,060	June 23, 1942	Oakes
2,307,461	Jan. 5, 1943	Guth
2,310,935	Feb. 16, 1943	(Carlton (Oakes
2,314,340	Mar. 23, 1943	(Brown (Clarke
2,314,349	Mar. 23, 1943	Guth
2,347,662	May 2, 1944	(Carlton (Oakes
2,357,335	Sept. 5, 1944	(Kugler (Oakes
2,357,348	Sept. 5, 1944	(Netherly (Cross (Anderson
2,357,350	Sept. 5, 1944	Oakes
2,357,823	Sept. 12, 1944	(Hatch (Clarke
2,358,313	Sept. 19, 1944	Brown
2,371,605	Mar. 20, 1945	(Carlton (Miller
2,386,780	Oct. 16, 1945	Cross
2,391,731	Dec. 25, 1945	(Miller (Reidesel
2,405,191	Aug. 6, 1946	Davis
2,414,474	Jan. 21, 1947	March
2,492,143	Dec. 27, 1949	(Gipple (Sindt

Minnesota Mining and Manufacturing Company Patent Applications:

433,028	Mar. 2, 1942	Carlton
514,982	Dec. 20, 1943	Nestor

Patent No.	Dated	Inventor/s
643,730	Jan. 26, 1946	(Frigstad (Clarke
757,929	June 28, 1947	Nestor
34,804	June 23, 1948	(Cross (Netherly
39,587	July 19, 1948	(McNamara (Kugler
[fol. 535]		
40,424	July 23, 1948	(Frigstad (Dahl
43,528	Aug. 10, 1948	(Cross (Netherly
44,233	Aug. 13, 1948	Frigstad
60,772	Nov. 18, 1948	Liedl et al.
85,322	Apr. 4, 1949	Heasley
89,155	Apr. 22, 1949	Nestor
128,298	Nov. 19, 1949	(Alstad (Frigstad
128,299	Nov. 19, 1949	(Reidesel (Frigstad
131,072	Dec. 5, 1949	Reidesel
160,752	May 8, 1950	Kuzma et al.
169,756	June 22, 1950	(Cross (Netherly
172,102	July 5, 1950	Kuzma et al.

[fol. 536]

IN THE UNITED STATES DISTRICT COURT
FOR THE SOUTHERN DISTRICT OF INDIANA
INDIANAPOLIS DIVISION

SHIKS MANUFACTURING CO.
v.
RAINBURG ELECTRO-COATING CORP.

CIVIL ACTION
NO. IP 56-C-262

Feb. 22, 1938. **Plaintiff's Exhibit No. JJJJJ** Re. 20,660

METHOD OF COATING AND APPARATUS THEREFOR AND PRODUCT 1/5/7

Original Filed July 30, 1928 3 Sheets-Sheet 1

RECEIVED
FEB 2 1961
OFFICE OF THE CLERK
SUPREME COURT, U.S.

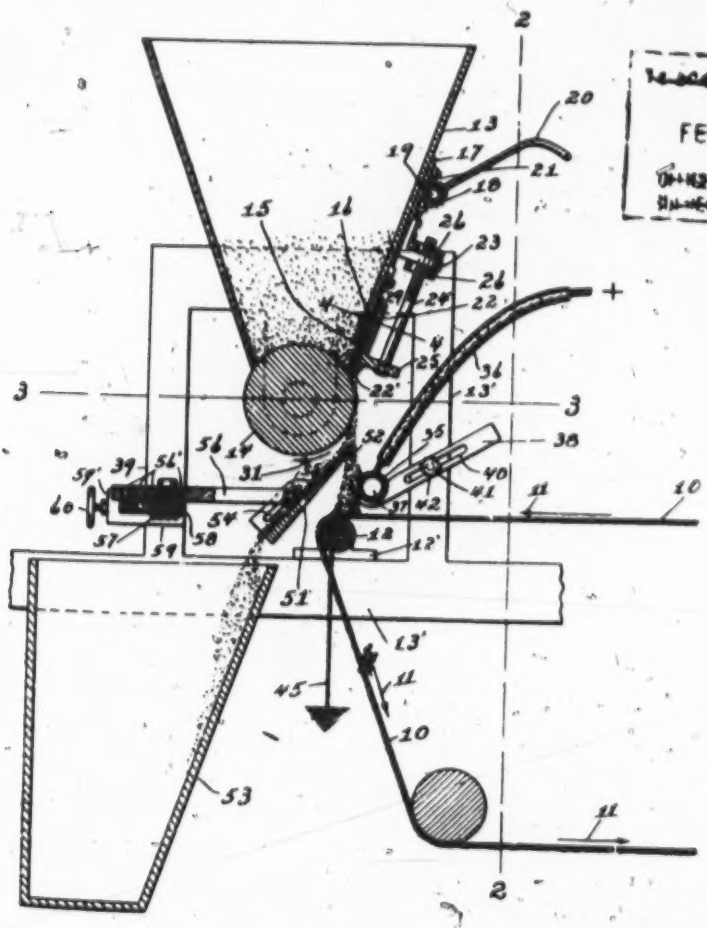

Fig. 1.

Inventor
Elmer C. Schacht

By Calhoun Bryant & Darby
Attorneys

Feb. 22, 1938. E. C. SCHACHT Re. 20,660

METHOD OF COATING AND APPARATUS THEREFOR AND PRODUCT

Original Filed July 30, 1928 3 Sheets-Sheet 2

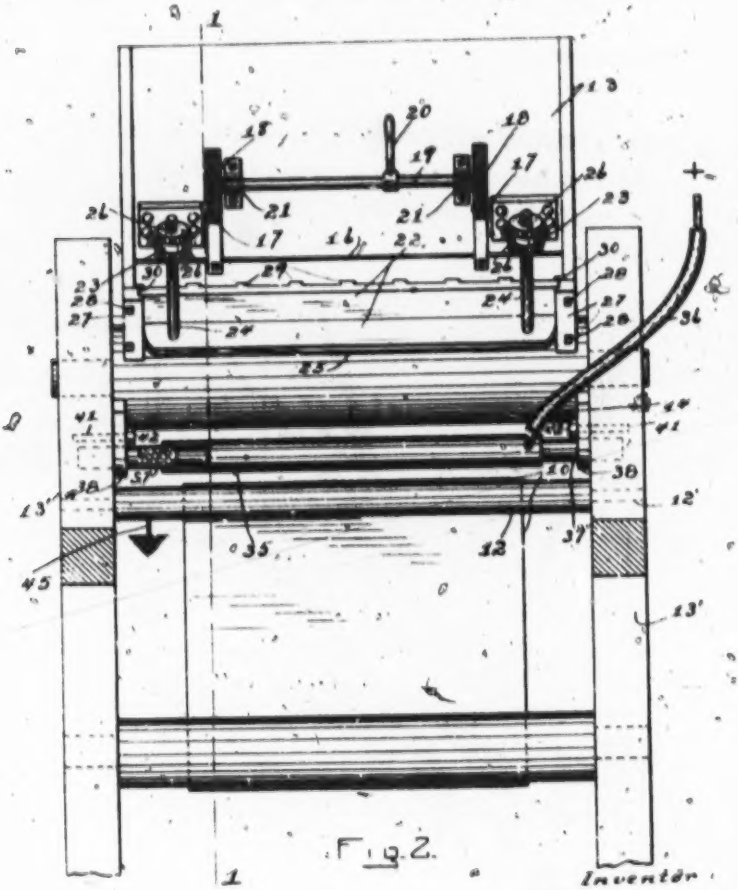

FIG. 2.

Inventor:
Elmer C. Schacht

Attorneys

[fol. 538]

Feb. 22, 1938. E. C. SCHACHT Re. 20,680

METHOD OF COATING AND APPARATUS THEREFOR AND PRODUCT

Original Filed July 30, 1928 3 Sheets-Sheet 3

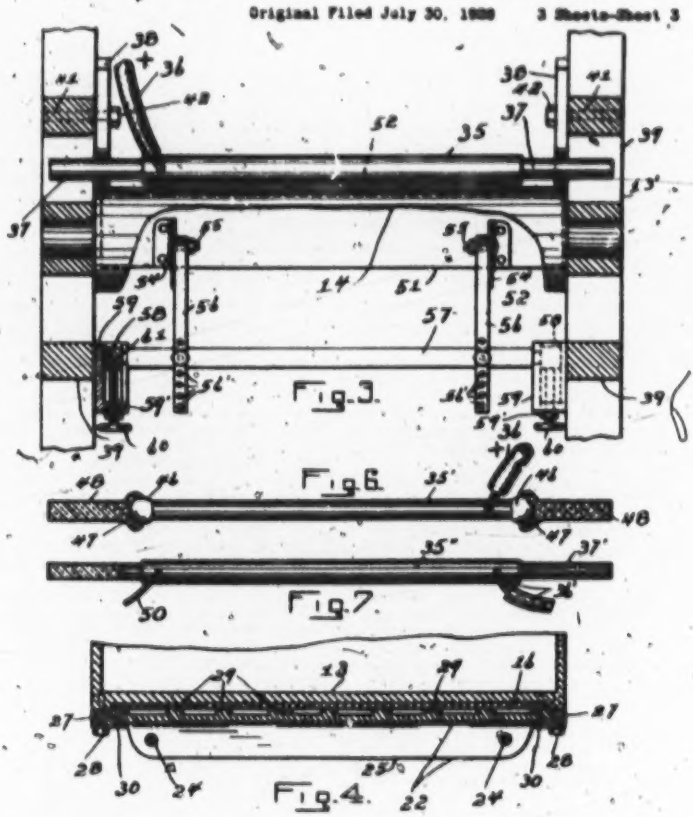

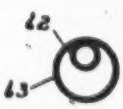

Fig. 5.

Inventor
Elmer C. Schacht
By [signature]
Attorneys

Reissued Feb. 22, 1938

Re. 20,660

UNITED STATES PATENT OFFICE

20,660

METHOD OF COATING AND APPARATUS THEREFOR AND PRODUCT

Elmer C. Schacht, Troy, N. Y., assignor, by mesne assignments, to Bohr-Manning Corporation, a corporation of Massachusetts

Original No. 2,027,397, dated January 7, 1936, Serial No. 206,223, July 30, 1933. Application for reissue December 27, 1937, Serial No. 182,007

45 Claims. (Cl. 91—68)

This invention relates to the art of coating with finely divided or fragmentary material.

An object of the invention is to provide an improved method for coating with such material and an apparatus for carrying out the method.

The invention seeks to provide an improved method for controlling the arrangement or distribution of the particles upon the surface to be coated.

The invention contemplates an arrangement or distribution control which will effect proper distribution or dispersion of the particles with reference to one another, and preferably also the proper positioning or orientation of each individual particle, so that in providing a coated surface of abrasive material, for instance, the particles have their major axes substantially perpendicular to the carrier or to the abrasive surface whereby the sharpest portion of each particle will be exposed with the major axes of the particles disposed substantially perpendicularly to the surface of the carrier.

The method and apparatus will be described in their application to the manufacture of an abrasive paper, such as sand paper, although it will be understood that while particularly useful in the manufacture of such material, the invention is not limited in broader aspects to this particular field.

Abrasive paper, by which is meant any abrasive sheet or strip material having an abrasive surface, such as sand, ordinarily consists of a backing or carrier of paper or fabric, or combined paper and fabric, which is first provided with an adhesive surface upon which the abrasive or cutting material, such as sand, is then deposited.

Abrasive paper is of two general types. In one type, the adhesive surface of the carrier or backing is completely covered with the abrasive grains or fragments. The individual grains are closely packed, so that virtually no portion of the backing surface is exposed. Such a coating of abrasive material is commonly called a "closed coating."

In the second type, the individual particles or grains are spaced apart as uniformly as possible over the surface, so that each grain stands by itself or alone as a unit of the abrasive surface. Such a coating of abrasive material is termed an "open coating".

The open coating is considered preferable for abrasive paper in some usages, since it does not tend to load or become packed with the material which is abraded. In some cases, a closed coating, in which the interstices between the individual grains are extremely small, and virtually non-existent, quickly becomes loaded or embedded with the material abraded, and this results in excessive friction and finally the burning of both the abrasive and abraded surfaces. Such loading and burning is especially noticeable when abrading soft materials or materials of a gummy or resinous nature. The open coating overcomes this objection, since in view of the substantial space around each of the abrasive grains, the abrasive surface does not become packed, and the particles removed from an abraded object do not remain in the interstices between the individual grains.

In the manufacture of both types of coating, it is preferable to arrange or orient the individual grains so that their major axes are substantially perpendicular to the carrier with the result that their sharper and more pointed portions are exposed. Furthermore, in the formation of an open coating, it has always been a problem to obtain the desired arrangement or dispersion of the individual grains with reference to one another. This dispersion or spacing of the individual particles is a problem particularly important in the formation of an open coating, but the proper distribution of the particles as they are deposited upon the carrier is also important in the manufacture of a closed coating. In the manufacture of the closed coating, it is customary to drop or deposit upon the adhesively coated carrier a greater amount of abrasive than it can hold. The surplus is then removed. Consequently, the only control as to the amount of abrasive retained is the holding capacity of the adhesive. In order to control accurately the amount of abrasive applied on a closed coating, it is, therefore, important to see that the surface is uniformly covered, and due to this it is necessary that the particles be uniformly distributed at the instant the abrasive is applied to the adhesive. When the particles are simply dropped on the adhesively coated carrier and no dispersing method employed, the resultant surface reflects any irregularities which are present in the fall or passage of the sand, and these irregularities produce streaks or ridges in the coating. It has also been found that there is a tendency in dropping sand or other abrasive particles for the latter to bunch together and produce what is called a lumpy or bunchy coating which greatly impair the cutting efficiency of the sheet because there are created a multiplicity of small high

[fol. 540]

areas which come in contact with the surface to be abraded. Obviously, these areas keep much of the abrasive out of contact with the surface being abraded, and thus reduce the efficiency of the sheet.

It will be understood, therefore, that by the terms "dispersion" or "arrangement", as applied to the particles, is not meant any particular spacing of the particles relative to one another, since the particles are "dispersed" or "arranged" relative to one another regardless of whether an open or closed coating is being formed. So far as the method of this invention is concerned, the difference between an open and closed coating resides solely in the extent or degree to which the electrostatic field is used, i. e., a stronger field or different disposition of the same is employed to produce an open coating than a closed coating. But in the manufacture of both types of coating the electrostatic field may be effectively employed to produce the desired arrangement or dispersion of particles in the abrasive stream.

Heretofore, it has been the common practice to supply the abrasive material, such as sand, from a hopper by means of a feed roll having associated therewith an adjustable gate which controls the feed of sand. In the use of coarser grades of sand or abrasive material, such a means for controlling its application has been found to be effective, to a certain extent, since coarse particles will not bind or pack between the gate and the feed roll and will flow uniformly [illegible] gate and roll to produce an open [illegible] the carrier. However, it has been observed that this expedient does not effectively guarantee the uniformity of particle distribution or the equalization of density throughout the different areas, and, moreover, it has no effect upon the sharpness of the abrasive surface produced, and does not have a tendency to arrange each individual particle so that its sharpest portion or point is exposed.

In the use of fine abrasive material, such as number 240 sand, a feed gate and roll or similar apparatus does not produce a uniform flow, even though the gate and feed roll surfaces are finely ground and brought extremely close together. The difficulty is particularly due to the tendency of the sand to pack or bind in the gate. As a result, the abrasive surface is characterized by bare spots, bleaches, bars and streaks.

Consequently, in the manufacture of abrasive paper from fine abrasive material, it is necessary to exercise extreme care to obtain a uniform flow of sand and to finely grind and adjust both the gate and feed roll.

The present invention seeks to provide an improved means for obtaining proper arrangement of the sand both with respect to the uniform dispersion or spacing of the particles relative to one another, and also with respect to the arrangement or orientation of each particle considered individually to expose its sharpest portion.

The invention also contemplates an improved apparatus for carrying out this method.

Essentially, the invention comprises the use of an electrical charge produced by an electrostatic field, which is arranged so as to influence the individual sand particles to obtain the proper distribution of the same over the surface, and also preferably to position or "orient" each particle so that its major axis is substantially at right angles to the abrasive surface whereby the sharpest and therefore most effective abrasive portion is exposed.

The invention also contemplates the use of the electrical field in such a manner that the stream of abrasive particles, as it flows toward the carrier, is controlled by the electrical field so as to cause a uniform distribution of the same relatively to one another, and thus produce a misting of the particles over a much greater area and eliminate ridges and streaks as well as the bunchiness or humping in the coating.

In providing the electrostatic field, the invention seeks to dispense with the necessity for accurately grinding and spacing the gate and feed roll. It has been found preferable to dispose the field so that it will affect the sand as it travels under the influence of a uni-directional force, such as gravity, which propels the material toward the surface of the carrier to be coated, thus permitting the field to disperse the entire sand-shower. The method also contemplates the selecting off from the dispersed or electrified shower, as by means of a baffle, any excess sand not desired, and permitting the remainder to drop with the particles in their properly dispersed relation and also individually oriented, i. e., sharpest points up, upon the adhesive surface. By properly arranging the electrostatic field, the method will also maintain a predetermined relation between each particle in the field until it is united with the surface, thus obtaining exposure of the sharpest and most abrasive portion of each particle.

In carrying out the method, a supply of sand may be arranged in a hopper above an adhesively surfaced carrier or backing. The hopper may, if desired, be provided with an adjustable gate and feed roll for controlling to a certain extent the showering of the sand upon the adhesive surface to be coated, although the sand may be dropped toward the carrier in surplus quantities. The electrostatic field is disposed between the carrier and gate, so that the sand must travel through or adjacent the field before it reaches the carrier.

The sand particles are each influenced by the electrical charge, which serves to fan or spread out and disperse the shower, maintaining the particles in substantially uniformly spaced relation until they reach the carrier. It will be found that the voltage or power of the field may be regulated to control the extent to which the particles are fanned out or dispersed, and, of course, a factor in this control will be the character of the coating desired. If a closed coating devoid of ridges or bunchiness is desired, the field will be of a character which will simply provide the uniform distribution necessary to prevent these defects. If an open coating is required, the field will be controlled so as to disperse the particles relatively to one another to a greater extent. If the sand is showered in surplus quantities, a baffle or diverting plate may be suitably arranged to divert from the normal path of the shower any portion thereof which it is desired to exclude from the carrier. The position of the baffle will, of course, vary depending upon the character of the coating desired, and the amount of sand being showered toward the carrier surface.

The particles not led off from the shower continue on to the carrier and fall upon its adhesive surface. Due to the dispersing action of the electrostatic field, the particles are deposited upon this surface in substantially uniformly spaced relation, thus providing an ideal open coating. When applied to an abrasive medium

such as sand, the electrostatic field has been found to be extremely efficient, and even though the controlling gate is opened quite wide to overcome the packing tendency of fine sands, and to provide a flow in excess of that required to use a coating, the use of the field will properly disperse the entire shower from which may be laid off such excess portions as are not to be permitted to fall upon the adhesive surface. The use of such an excess flow eliminates the necessity for maintaining the gate and feed roll accurately ground or adjusted, and moreover, the irregularities of sand flow due to surface imperfections on the gate or roll have been found to be relatively small in relation to the large amount of sand flowing.

As will be understood, the deposition of the particles upon the carrier uninfluenced by any force which tends to oppose the effect of the electrostatic field, except, of course, the weight of the particles themselves, permits the field to effect desired control of position and the particles are, as a result, arranged upon the carrier under the influence of the field substantially unaffected by any other force.

Furthermore, it has been found that the resultant abrasive surface is much sharper than a surface produced by simply dropping the material upon the carrier, even though attempts may be made to control the arrangement of the same by other media than electrical means.

In obtaining the proper orientation of each individual particle with its sharpest portion exposed, it is thought that the field causes substantially each particle to align itself so that its longest axis is virtually parallel to the lines of force of the field. The rate of discharge of an electrostatic charge is dependent upon the surface characteristics of the charged body, and the larger the radius of curvature, the slower the rate of discharge, and the sharper the point, the faster the rate of discharge. It is believed that this relation of the rate of discharge of the surface characteristic of the charged body, e. g., sand grain with a pointed abrasive portion, discharge of the surface characteristic of the charged body, e. g., sand grain with a pointed abrasive portion, causes the sharpest points of the grains to orient themselves so that their major axes are parallel to the lines of force of the field, with the result that the particles are deposited upon the surface with their sharpest points directed away from the carrier and with the major axes of the particles perpendicular to the carrier. Consequently, the points are made to project outwardly, and the resultant coating is very much sharper than a coating made without the use of an electrical force for orientating or arranging each individual particle. Obviously, of course, such an arrangement or orientation of the particles is useful in either a closed or open coating, since it (1) increases the sharpness of the coating and enables faster and easier cutting, (2) minimizes heating and loading, and (3) increases the cutting life or capacity of the abrasive surface.

Moreover, it will be clear that the use of the electrostatic field in the formation of a closed coating prevents bumping or bunching of the sand by distributing the same over the entire area or surface to be coated. It blends out the irregularities which would otherwise develop in the stream due to lack of uniformity in the feed gate and to other factors which modify the effect of gravity, or other means which may be used to direct the stream to the carrier.

It will be understood, of course, that the electrostatic field can be used as a dispersing means with any type of particles whether abrasive or non-abrasive, to insure a uniform distribution, and irrespective of the nature of the substance or carrier upon which they are being deposited.

In the manufacture of sand paper, the electrostatic field is particularly useful. Although, in producing any particular grade of paper the particles are of approximately equal size and weight, it has, for many years, been the practice to use particles known as (a) control, (b) undergrade, and (c) overgrade; the control particles predominate. It has been found that the electrostatic field utilized in the manner herein described tends to stratify the particles and cause to locate on the top surface the larger particles, that is, the particles having larger areas of cutting surface.

It will be understood, therefore, that the control or change of position of the various particles effected by the field has three characteristics: First, the particles are oriented or turned by the lines of force so that the sharper surfaces of the abrasive coating are exposed. Second, the various particles are stratified so that the larger or more effective particles are on the surface. Third, the particles are dispersed to produce a more uniform coating, due to the fact that they are mutually repellent.

The dispersion of the particles is caused by the fact that, as they enter the field, they acquire a charge of the same polarity of that of one of the poles forming the field, and since all of the particles have been graded to approximately the same size, although some are undergrade, some are overgrade and others are control particles, they all acquire a charge of approximately equal intensity and of the same polarity. Hence, all of the particles in any shower, as they pass through the field on their path to the other pole are mutually repellent with a substantially equal repelling force and thus arrange themselves so that they are substantially equidistant in all directions. This repelling action is effected not only as the particles pass through the field but on the carrier.

It is preferred that the electrical field be arranged at the point of deposition of the particles, so that this control of position is exercised at the point of deposition and at the time the particles strike the carrier. As a consequence, the positions of the particles will be controlled before the adhesive has set and will be effected on the carrier as well as in the path of the particles to the carrier.

In practicing the method, various forms of apparatus may be employed, and in the accompanying drawings showing a preferred form:

Figure 1 is a vertical sectional view on substantially the line 1—1, of Figure 2.

Figure 2 is a vertical sectional view on the line 2—2 of Figure 1.

Figure 3 is a horizontal sectional view on the line 3—3 of Figure 1, with the feed roll shown in elevation, and partly broken away.

Figure 4 is a fragmentary sectional view on the line 4—4 of Figure 1.

Figure 5 is a cross sectional view of a modified form of discharge electrode.

Figure 6 is an elevational view of a modified form of discharge or high potential electrode having its ends formed to eliminate "end effect", and

Figure 7 is a top plan view of another form of discharge electrode.

Referring to the accompanying drawings for a more detailed description, 10 indicates the carrier or paper sheet which may be fed in the direction of the arrows 11 by suitable means (not shown) over a roll 12 having end bearings in brackets 12' on the frame 13'. As will be understood, the paper has an adhesively coated top surface exposed to receive sand or other abrasive material dropped from a hopper 13, the lower end of which is partly closed by a feed roll 14. A wall of the hopper terminates at 15, a short distance above the feed roll to provide a discharge opening for the sand, which may be entirely closed by means of a shut-off gate 16 operable by means of a pair of rack bars 17 engaged by gears 18 upon a rock shaft 19, the latter carrying an operating lever 20 and being mounted in bearings 21 upon the wall of the hopper. The gate 16 is provided for the purpose of entirely shutting off the supply of sand when desired, and a second regulating gate 22 for adjusting the size of the opening between the lower end of the gate 16 and the periphery of the sand roll is adjustably mounted in brackets 23 by means of adjusting rods 24 secured to an outwardly extending rib 25 upon the gate, and extending through openings in the bracket. Clamping nuts 26 on opposite sides of the bracket webs through which the bolts 24 extend serve to secure the gate in any set position. As will be observed from Figure 4, the shut-off gate 16 is arranged between the regulating gate and the hopper wall, and it fits closely in a slideway formed by strips 27 secured to the hopper by bolts 28. The regulating gate 22 is provided on its rear surface with ribs 29 which abut the face of the shut-off gate and assist in providing a guideway for the same.

As the regulating gate is adjusted by means of the adjusting bolts 24, it is adapted to slide in grooves 30 (Fig. 4) formed by the strips 27 secured to the hopper.

When sand or other finely divided abrasive material is arranged within the hopper, operation of the feed roll in the direction of the arrow 31 (Fig. 1) after the shut-off gate has been opened and the regulating gate has been suitably adjusted, will cause the sand to drop downwardly in a shower toward the exposed adhesively coated surface of the carrier 10. Thus, by the use of the feeding means and gravity, the abrasive particles are introduced into an electrical field which is established in the manner hereinafter described.

The amount of sand discharged between the periphery of the sand roll and the end 22' of the adjusting gate 22, will, of course, depend upon the adjustment of the gate.

An electrostatic field may be formed by means of a tube 36 connected, as by means of a lead wire 35, to a source of high voltage (not shown). The tube 36 may be supported at its ends by mounts of insulating posts 37 carried by brackets 38 upon the frame 13'. The brackets 38 may be provided with elongated slots 40 receiving bolts 41 with clamping nuts 42, whereby the position of the electrode may be varied as desired. The zero or ground potential side of the field may be provided by means of the paper carrying roll 12 which may be formed of suitable material and connected with the ground, as by means of a lead 43. The field formed by the tube 36 and roll 12 may be varied in intensity and extent, as desired. For instance, it is possible to make a field of higher unit intensity by reducing the diameter of the tube 36, or a broader field and one of lower unit intensity, by increasing the diameter of the electrode 36. Moreover, the proximity of ground or zero potential affects the field, and if desired, a multiplicity of tubes 36 may be employed.

In order to avoid "end effect", the ends of the tube may be rounded, as illustrated in Fig. 6, wherein 'the tube 36' is provided with rounded ends or heads 44 which are seated in sockets 45 provided in the insulating post 46.

Furthermore, it has been found at times that by moving the tube 36, as by rotation, will have a pronounced effect upon the character of the field, and that instead of the tube 36, a solid rod may be employed if desired. In some instances, instead of a hollow tube, a wire brush, or a series of wires, such as piano wires, have been found to provide efficient electrodes and to alter the character of the electrostatic field to meet specialized conditions in the application of abrasive material.

Another modified form of electrode is shown in Figure 7, wherein the electrode is provided at one end with a substantially horizontally extending rigid strip 50 of metal, such as copper wire or brass, and at the other end, the lead 35' is directed substantially horizontally, and is exposed for the purpose of providing in effect angularly bent ends of the electrode tube 36'', which may be supported upon the insulating posts 37'. The strip and exposed lead wire being directed toward the sand shower at an angle of about 45° to the tube, serve to decrease "end effect" and to fan out the edge of the sand shower, which, as will be understood, in dropping upon the abrasive material passes through the field. The field may thus be regulated in a manner to modify the dispersing or spacing of the abrasive particles. The variation of the field intensity also necessarily or inherently varies the pull of the particles into the adhesive to a greater or less extent and thus modifies their depth of penetration in the adhesive coat. As the sand enters the electrostatic field, the particles are dispersed, and in such dispersed relation are deposited upon the adhesive surface of the carrier 10. It will be understood, of course, that when the particles enter the field, they receive a charge and the field has the effect of causing a movement of the particles from one pole toward the other. When the poles and carrier with its adhesive surface are arranged as illustrated with the carrier between the poles, the adhesive surface interrupts this flow from the pole 36 toward the pole formed by the roll 12, so that the adhesive surface is contacted by the charged particles in the course of this flow. The effect of the field is to fan out or spread the shower of sand, as illustrated in Figure 1, and ordinarily it has been found that it is preferable to position the regulating gate 22, so that an excess or surplus amount of sand is discharged from the hopper. In order to divert from the normal path of flow such quantity as should not fall upon the carrier, a baffle or diverting plate 51 is positioned with its surface inclined upwardly toward the feed roll, and with one edge 52 entering the shower of sand. This baffle serves to direct a portion of the shower over its surface downwardly into a hopper 53, from which the sand may be removed as desired.

In order to provide suitable means for varying the position of the baffle, so that the amount of sand selected off from the shower may be accurately regulated, the baffle is provided with a

pair of upstanding slotted lugs 84, into the slots of which project clamping bolts 85 carried by adjusting arms 86 (Figure 2) which are positioned upon a cross head 87 having end blocks 88 slidably mounted in brackets 89 upon the frame 20. Adjusting screws 90 are threaded in walls 90' of the brackets 89 and have heads 91 swivelled in the bosses 92. As will be understood, manipulation of the screws 90 will guide the blocks and cross head 87 toward and from the sand shower, and thus move the baffle horizontally. The angular portion of the baffle may be varied at the clamping bolts 85, and as will be observed, the arms 86 are provided with a series of openings 86' so that their effective length may be altered.

In Figure 5 there is shown a modified form of electrode comprising an electrified tube 82, which is arranged within a tube 83 of considerably larger diameter and in electrical contact with the electrified tube, by which it is supported. The outer tube considerably enlarges the effective diameter of the electrode, and as will be understood, broadens the field produced. The rod 82 may be connected to a source of high voltage in any suitable manner (not shown).

In operating the apparatus, the position of the baffle 81 will, of course, determine the portion of sand showered from the hopper which will be permitted to fall upon the adhesive surface. As has been explained, instead of bringing the end 22' of the gate close to the feed roll, even with extremely fine sands, in order to determine the exact amount of sand necessary to make the coating desired, the gate is preferably opened sufficiently wide to overcome the packing tendencies of said sands and to obtain a uniform flow, which is in excess of that required to produce a satisfactory coating. The comparatively heavy flow of sand eliminates the necessity for keeping the gate and feed roll perfectly ground, because the irregularities in the sand flow due to surface imperfections on the gate or roll, are very small in proportion to the large amount of sand flowing. As the sand stream leaves the gate, it passes within the influence of the electrostatic field, and immediately causes a dispersion of the particles or a fanning out or widening of the stream or shower. As has been explained, this dispersion can be varied by changing the characteristics of the field by any of the means described. Moreover, varying the voltage controlling the field will control the dispersing action of the same. The adjustment of the baffle 81 will regulate the amount of the shower, which is diverted from the path toward the surface to be coated, and in ordinary practice, it will be found that the control of the amount of grain applied and the character of the coating may be effectively controlled by varying the voltage without making adjustments in the apparatus.

Since the tube 26 is sufficiently long (Fig. 2) to extend beyond the edges of the paper, the sand will be uniformly applied throughout the entire width of the same, and by properly regulating the speed of travel of the paper, the sand may be continuously applied as the paper travels over the roll 12 to a takeup roll (not shown).

As illustrated in Figure 1, the abrasively coated adhesive surface is conducted from the electrical field over the rolls 12, which engage the undersurface or non-coated surface of the carrier. In other words, the material is completed to provide a finished material having the abrasive particles in their oriented spaced relation determined by the electrical field and the finished product has the characteristics hereinbefore described.

As will be understood, the electrical field is established altogether independently of the carrier, and neither the carrier nor the coating is relied upon to establish the field. As a result, the method is applicable to the manufacture of abrasives with substantially all kinds of adhesive coatings, and the creation of the field is not dependent upon the carrier coating or the movement of the carrier. Moreover, it is possible to localize the field at the point of deposition and to maintain the same of the desired character and strength, in accordance with the regulation of the field, independently of the carrier movement or its coating characteristics.

By the expression "mechanically directing" or "mechanically propelling" the abrasive particles, is meant the subjection of the particles to a force independent of the electrical field and which directs or propels the particles toward the adhesive surface of the carrier.

By the expression "adhesively retaining" as used in the claims with reference to the retention of the particles upon the carrier, is meant the use of means other than electricity for retaining by adhesive action the coating material upon the carrier. By "abrasive" is meant any abrasive or coating material in fragmentary form; by "carrier" is meant any desired material or support on which the fragmentary or divided material may be superimposed or deposited; by "controlled" or "regulated" as applied to the supply or feed of finely divided material to the carrier is meant simply that the material is supplied in such a way as to be responsive to the action of the electrical field for the result desired, whether dispersion or orientation or both.

Obviously, numerous modifications may be made in the structure illustrated and described without departing from the invention, the essence of which is more definitely set forth in the following claims.

I claim:—

1. That improvement in the art of coating a carrier with finely divided abrasive material which consists in gravitationally supplying abrasive particles to the carrier, controlling the positions of the particles upon the carrier by the action of an electrical field substantially at their point of deposition upon the carrier, and adhesively retaining the particles upon the carrier with the positions of the particles arranged by the electrical field.

2. In the art of coating, the improved method which consists in disposing a carrier beneath a source of finely divided abrasive material, dropping the material in controlled amount upon the carrier and subjecting the material as it travels to the carrier to the action of an electrical field so disposed as to orient the individual particles and adhesively retaining the material upon the carrier.

3. In the art of coating, the improvement which consists in supplying by gravity to a permanent carrier regulated amounts of finely divided solid material of a character adapted to be dispersed by electrical action, providing adhesive for retaining the particles on the carrier and dispersing the material in its gravitational path to the carrier by the action of an electrical field, whereby the particles are deposited thereon in dispersed relation.

4. In the art of sand coating a carrier, the im-

[fol. 544]

provement which consists in supplying by gravity to the carrier regulated amounts of sand, providing an adhesive for retaining the sand particles on the carrier and dispersing the sand particles by the action of an electrical field as they are applied to the carrier.

5. In the manufacture of abrasives, the improved method which consists in providing a carrier having a surface coated with an adhesive depositing by gravity finely divided abrasive material upon said surface and dispersing the particles by the action of an electrical field as they are being deposited upon the surface.

6. In the manufacture of abrasives, the improved method which consists in providing a carrier having a surface coated with an adhesive, depositing sand by gravity upon said surface and dispersing the particles by the action of an electrical field as they are deposited upon the surface.

7. In the manufacture of abrasives, the improved method which consists in depositing abrasive particles by gravity upon a carrier surface, providing an adhesive material for retaining the particles on the carrier, and dispersing the particles by the action of an electrical field as they are applied to the carrier.

8. In the manufacture of abrasives, the improved method which consists in providing a carrier having a surface coated with an adhesive, depositing by gravity finely divided non-magnetic abrasive material upon said surface from a point thereabove and dispersing the particles upon the surface by the action of an electrical field.

9. An apparatus for the manufacture of coated carriers comprising means for vertically directing a controlled feed of finely divided solid material adapted to be dispersed by an electrical field, means for supporting in the path of said feed an adhesively surfaced carrier to be coated, and a pair of stationary electrodes for producing an electrical field to disperse the individual particles of finely divided material upon said adhesive surface as the material is supplied thereto.

10. An apparatus for the manufacture of coated carriers comprising means for mechanically projecting a controlled feed of finely divided solid material adapted to be dispersed by an electrical field, means for supporting and causing to travel in the path of said material an adhesively surfaced carrier to be coated, and a pair of stationary electrodes for producing an electrical field to disperse the individual particles of finely divided material upon said adhesive surface as the material is supplied thereto.

11. Apparatus for the manufacture of abrasives comprising means for supporting and feeding a carrier provided with a surface coated with an adhesive material for the reception of abrasive particles, means for mechanically projecting toward said adhesive finely divided abrasive material in controlled amount, and stationary electrodes for producing an electrical field adjacent the path of said finely divided material whereby to disperse the particles as they travel toward the adhesive surface, thereby to cause the same to be deposited on said surface in dispersed relation, and means for continuously conducting the abrasively coated carrier away from said field to produce a material having the particles fixed thereon in their positions as determined by the electrical field.

12. Apparatus for the manufacture of abrasively coated carriers comprising means for supporting a carrier having a surface coated with an adhesive material adapted to receive and retain abrasive particles, means above said carrier for supplying by gravity to said adhesive finely divided abrasive material, and means for producing an electrical field adjacent the gravitational path of said material, whereby to disperse the particles as they travel toward the adhesive surface and cause the same to be deposited thereon in dispersed relation.

13. Apparatus for the manufacture of abrasives comprising means for supporting a carrier having a surface coated with an adhesive adapted to receive and retain abrasive particles, means for mechanically directing abrasive particles toward said adhesive surface in controlled amount, and a pair of stationary electrodes for creating adjacent the path of the particles an electrical field adapted to disperse the particles as they travel toward the adhesive surface, whereby to cause the particles to be dispersed on said surface in dispersed relation.

14. In the manufacture of abrasives, the improved method which consists in providing a carrier having a surface coated with an adhesive, gravitationally directing abrasive particles toward said adhesively coated surface, and controlling the position of the particles relative to one another on the carrier by an electrical field.

15. In the manufacture of abrasives, the improved method which consists in providing a carrier having a surface coated with an adhesive, directing by gravity abrasive particles toward said adhesively coated surface, and controlling the position of the particles relative to one another in their path to the carrier and on the carrier by an electrical field.

16. In the manufacture of abrasives, the improved method which consists in providing a carrier having a surface coated with an adhesive, directing abrasive particles toward said carrier by the action of gravity, and controlling the position of the particles relative to one another on the carrier by an electrical field.

17. In the manufacture of abrasives, the improved method which consists in providing a carrier having a surface coated with an adhesive, directing abrasive particles toward said carrier by the action of gravity, and controlling the position of the particles relative to one another in their path to the carrier and on the carrier by an electrical field.

18. In the manufacture of abrasives, the improved method which consists in providing a carrier, directing abrasive particles toward said carrier, controlling the position of the particles relative to one another in their path to the carrier by an electrical field and varying the relative positions of the particles in said path by regulating the electrical field.

19. Apparatus for the manufacture of abrasives, comprising means for supporting a carrier having a surface coated with an adhesive adapted to receive and retain abrasive particles, means above said carrier for supplying abrasive particles and directing the same by gravity toward said surface, and an electrical field disposed in the path of said particles so as to control the arrangement of the same relative to one another at the time they are deposited upon the carrier.

20. Apparatus for the manufacture of abrasives, comprising means for supporting a carrier having a surface coated with an adhesive adapted to receive and retain abrasive particles, means above said carrier for supplying abrasive particles

and directing the same by gravity toward said surface, and an electrical field disposed in the path of said particles so as to control the arrangement of the same relative to one another at the time they are deposited upon the carrier, said means being variable whereby to vary the distribution of the particles relative to one another.

21. Apparatus for the manufacture of abrasives, comprising means for supporting a carrier having a surface coated with an adhesive adapted to receive and retain abrasive particles, means for supplying abrasive particles and directing the same toward said surface, an electrical field disposed in the path of said particles so as to control the arrangement of the same relative to one another at the time they are deposited upon the carrier, and means positioned to deflect from said path and away from the carrier particles directed thereto by said first-mentioned means.

22. Apparatus for the manufacture of abrasives, comprising means for supporting a carrier having a surface coated with an adhesive adapted to receive and retain abrasive particles, means for supplying a stream of abrasive particles and directing the same toward said surface, an electrical field disposed in the path of said particles so as to control the arrangement of the same relative to one another at the time they are deposited upon the carrier, and means positioned to deflect from said path and away from the carrier particles directed thereto by said first-mentioned means, said deflecting means being adjustable in position relative to said path whereby to vary the amount of particle stream deflected thereby.

23. Apparatus for the manufacture of abrasives comprising means for conducting an adhesively coated carrier along a predetermined path, a pair of stationary electrodes adjacent said path for creating an electrical field adapted to control the positions of abrasive particles on said carrier, said electrodes serving to create the field independently of the carrier, and means for supplying under the action of said field to said carrier finely divided abrasive particles.

24. Apparatus for the manufacture of abrasives comprising means for conducting an adhesively coated carrier along a predetermined path, a pair of stationary electrodes adjacent said path for creating an electrical field adapted to control the positions of the particles on said carrier, said electrodes serving to create the field independently of the carrier, and means for supplying by gravity to said carrier finely divided abrasive particles.

25. Apparatus for the manufacture of abrasives comprising means for conducting an adhesively coated carrier along a predetermined path, a pair of stationary electrodes adjacent said path for creating an electrical field adapted to control the positions of the particles on said carrier, said electrodes serving to create the field independently of the carrier, and means for supplying to said carrier finely divided abrasive particles, said supplying means serving to deposit the particles on the carrier adjacent the electrical field whereby to effect said control of the positions of the particles by the field substantially at the point of deposition of the particles.

26. Apparatus for making abrasive paper comprising means for conveying a paper backing having an adhesive surface in a substantially horizontal direction, means for supplying abrasive particles and depositing the same upon the backing in a substantially vertical direction, and means for producing an electrical field through which the particles pass on their way to the backing, the lines of force intersecting the path of the particles as it approaches the adhesive surface.

27. In the manufacture of abrasives, the improved method which consists in conducting along a substantially horizontal path an adhesively coated carrier, producing independently of the carrier an electrical field adjacent said path, mechanically directing in a substantially vertical path finely divided abrasive particles to said carrier and depositing the particles on the carrier within the field, and utilizing the electrical field to orient and disperse the particles on the carrier.

28. In the manufacture of abrasives, the improved method which consists in providing a moving carrier having an adhesively coated surface, mechanically projecting abrasive particles toward said surface, controlling the position of the particles relative to one another as they pass to the carrier by an electrical field, and varying the relative positions of the particles in said path and on the carrier by regulating the field.

29. In the manufacture of abrasives, the method which consists in conducting along a path an adhesively coated carrier, creating adjacent said path independently of the carrier and its coating an electrical field, supplying by gravity finely divided abrasive particles to said carrier and utilizing the electrical field to control the positions of the particles on the carrier.

30. In the manufacture of abrasives, the method which consists in conducting along a substantially horizontal path an adhesively coated carrier, creating adjacent said path independently of the carrier and its coating an electrical field, projecting in a substantially vertical path finely divided abrasive particles through the field to said carrier and utilizing the electrical field to control the positions of the particles on the carrier.

31. In the manufacture of abrasives, the improved method of making an "open-coat" abrasive article which consists in establishing an electrical field, supplying finely divided abrasive particles to the electrical field, orienting and dispersing the particles in spaced relation by the electrical field, positioning the dispersed and oriented particles on an adhesively coated carrier, and conducting the carrier away from the field and uniting the particles to the carrier to produce a material having the particles in oriented and spaced positions on said carrier as determined by the electrical field.

32. In the manufacture of abrasives, the improved method of making an "open-coat" abrasive article which consists in conducting an adhesively coated carrier along a predetermined path, establishing an electrical field independently of said carrier, initiating movement of finely divided abrasive particles toward the carrier utilizing the electrical field to disperse in spaced relation the particles on the carrier and conducting the carrier away from the field and uniting the particles to the carrier to produce a material having the particles fixed in spaced relation determined by the electrical field.

33. In the manufacture of abrasives, the improved method which consists in conducting an adhesively coated carrier along a substantially horizontal path, establishing an electrical field independently of the carrier, the lines of force of the field intersecting the surface of the carrier, introducing finely divided abrasive particles into

[fol. 546]

said field, utilizing the electrical field to disperse in spaced relation the particles on the carrier and conducting the carrier away from the field to produce a material having the particles fixed in spaced relation determined by the electrical field.

34. In the manufacture of abrasives, the improved method which consists in conducting an adhesively coated carrier along a substantially horizontal path, establishing an electrical field independently of the carrier, the lines of force of the field intersecting the surface of the carrier, introducing finely divided abrasive particles into said field, utilizing the electrical field to disperse and orient in spaced relation the particles on the carrier and conducting the carrier away from the field to produce a material having the particles fixed in their oriented spaced relation determined by the electrical field.

35. In the manufacture of abrasives, the improved method which consists in conducting an adhesively coated carrier along a predetermined path, establishing an electrical field independently of said carrier, bringing finely divided abrasive particles into said field, utilizing the electrical field to disperse the particles in spaced relation on the carrier and conducting the carrier away from the field to produce a material having the particles fixed in their spaced relation determined by the electrical field.

36. In the manufacture of abrasives, the improved method which consists in conducting along a substantially horizontal path an adhesively coated carrier, establishing an electrical field independently of the carrier, the lines of force of the field intersecting the surface of the carrier, introducing finely divided abrasive particles into said field and utilizing the electrical field to move the particles along the lines of force of the field into the adhesive surface of the carrier and conducting the carrier away from the field to provide a finished material having the particles fixed in their positions as determined by the electrical field.

37. Apparatus for making an abrasive material, comprising electrodes of opposite polarity for establishing an electrical field, means for conveying a backing material having an adhesive surface through said field established by said electrodes independently of the backing material, and means for supplying finely divided abrasive material to said field, the field being arranged to disperse and orient the particles on the adhesive surface of the carrier as it moves therethrough.

38. Apparatus for making abrasive material, comprising electrodes of opposite polarity for establishing an electrical field, means for conveying a backing material having an adhesive surface through said field established by the electrodes independently of the backing material, and means for causing movement of finely divided abrasive particles into said field, said field being arranged to disperse the particles on the adhesive surface of the carrier.

39. In the manufacture of abrasives, the improved method which consists in moving an adhesively coated carrier along a predetermined path, establishing an electrical field between poles of opposite polarity and independently of the carrier, introducing finely divided abrasive particles into said field to receive a charge, and passing the carrier through said established field between said poles with the adhesive surface arranged to be engaged by the charged particles and to interrupt their movement from one pole toward the other.

40. In the manufacture of abrasives, the improved method which consists in moving an adhesively coated carrier along a predetermined path, establishing an electrical field between poles of opposite polarity and independently of the carrier, introducing finely divided abrasive particles into said field to receive a charge, passing the carrier through said established field between said poles with the adhesive surface arranged to be engaged by the charged particles and to interrupt their movement from one pole toward the other and conducting the carrier from the field to produce a finished material having the particles arranged as determined by the field.

41. In the art of coating sheet material, the improved method which consists in moving an adhesively coated sheet-carrier along a predetermined path, establishing by electrode means independent of the carrier an electrical field with its lines of force crossing said path and introducing into said field fragmentary material of a character adapted to be arranged by an electrical field to receive a charge and to be moved by said field against the adhesive surface of the carrier while passing the carrier through said field with the adhesive surface arranged to be engaged by the charged particles and to interrupt their movement by the field.

42. In the art of coating sheet material, the improved method which consists in moving an adhesively coated sheet-carrier along a predetermined path, establishing by electrode means independent of the carrier an electrical field with its lines of force crossing said path and introducing into said field a controlled feed of fragmentary material of a character adapted to be arranged by an electrical field to receive a charge and to be moved by said field against the adhesive surface of the carrier while passing the carrier through said field along said path with the adhesive surface arranged to be engaged by the charged particles and to interrupt their movement by the field.

43. Apparatus for the manufacture of coated sheet material comprising means for conducting an adhesively coated sheet-carrier along a predetermined path, electrode means adjacent said path and independent of a carrier conducted by said first mentioned means for creating an electrical field having its lines of force crossing said path and adapted to arrange fragmentary material of a character adapted to be arranged by an electrical field on the adhesive surface of a carrier conducted along said path by said conducting means, and means for supplying a controlled feed of fragmentary material to said field during the operation of said conducting means.

44. Apparatus for the manufacture of coated sheet material comprising means for conducting an adhesively coated carrier along a predetermined path, stationary electrode means adjacent said path for creating an electrical field having the lines of force crossing said path and adapted to project fragmentary material of a character adapted to be arranged by an electrical field against the adhesive surface of a carrier conducted along said path by said first mentioned means, said second mentioned means serving to create the field independently of a carrier conducted by said first mentioned means, and means for supplying fragmentary material to said field during the operation of said conducting means.

45. Apparatus for the manufacture of coated

[fol. 547]

sheet material comprising means for continuously conducting an adhesively coated carrier along a predetermined path, stationary electrode means adjacent said path for creating an electrical field having the lines of force crossing said path and adapted to project fragmentary material of a character adapted to be arranged by an electrical field against the adhesive surface of a carrier conducted along said path by said first mentioned means, said second mentioned means serving to create the field independently of a carrier conducted by said first mentioned means, and means for continuously supplying a controlled feed of fragmentary material to said field during the operation of said conducting means.

ELMER C. SCHACHT.

[fol. 548]

HILL, SHERMAN, MERONI, GROSS & SIMPSON
THE FIRM OF CHARLES W. HILLS
1414 MONADNOCK BUILDING
53 W. JACKSON BLVD.
CHICAGO, ILL.

Jan. 7, 1936. O. S. BUCKNER 2,027,087

ABRASIVE SHEET AND PROCESS OF MAKING THE SAME

Filed Oct. 3, 1929

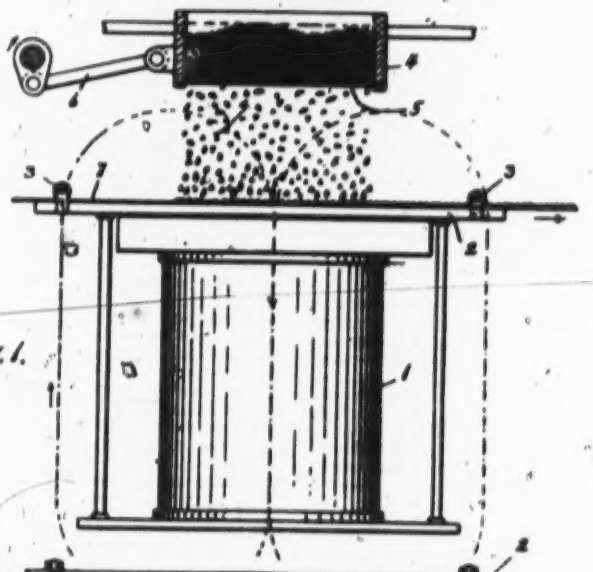

Fig. 1.

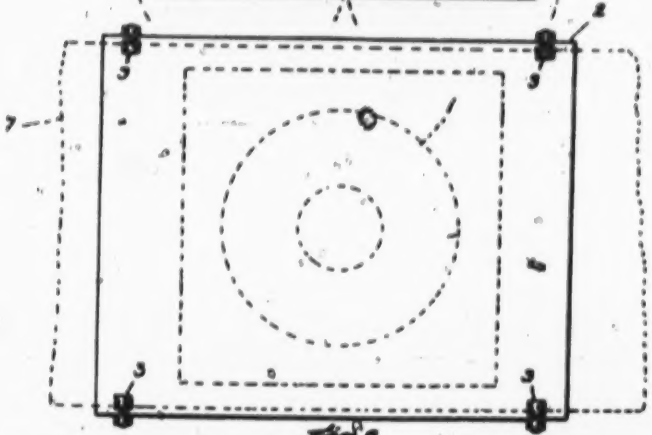

Fig. 2.

Fig. 3.

Inventor.
Orville S. Buckner
by [illegible]
Atty.

Patented Jan. 7, 1936 2,027,067

UNITED STATES PATENT OFFICE

2,027,067

ABRASIVE SHEET AND PROCESS OF MAKING THE SAME

Orville S. Buckner, Westboro, Mass., assignor to Behr-Manning Corporation, Troy, N. Y., a corporation of Massachusetts

Application October 3, 1933, Serial No. 218,033

8 Claims. (Cl. 91—68)

This invention relates to a modified form of the invention disclosed in my issued Patent 1,830,788, dated October 17, 1933, which relates to abrasive or attrition tools and methods of making the same, and in the construction of which the elongated grains of abrasive material are electrically positioned, so that they are bonded in approximately perpendicular relation to the working face of the tool.

The present invention relates, more specifically to an application of the generic invention to the production of abrasive or attrition sheets and has for its object the production of a sheet of this character which has the essential characteristics of the abrasive tools previously disclosed in said application and to a method of making the same which will be commercially successful.

I accomplish these objects in the manner hereinafter described and illustrated in the accompanying drawing in which:

Fig. 1 is a side elevation of the essential features of an apparatus which I preferably employ in performing the process of making attrition sheets.

Fig. 2 is a plan view thereof.

Fig. 3 is a sectional view of the finished product.

In carrying out the method of the present invention, in order to make the abrasive material responsive to a magnetic field the abrasive grains are coated with a moist adhesive, then are mixed with finely pulverized iron or steel, and then the adhesive is permitted to dry, so that the grains become coated with a magnetic substance. As some of the grains are likely to adhere to each other, this adhesion must then be broken, and this may be accomplished in various ways, as by working the same through a wire screen of suitable mesh.

As thus prepared, the grains are applied to sheets of suitable material in the following manner; the apparatus which is preferably employed comprising an electromagnet 1 of straight cylindrical form having the faces of its ends, which form the poles, disposed in planes perpendicular to the central axis of the magnet, the latter being disposed perpendicularly so that said faces will be horizontal. A table 2 of thin brass, or similar non-magnetic substance is disposed on the top end of the magnet and is provided with a series of suitably arranged guide-rolls 3-3 at its edges beneath which the sheets to be coated are passed. A receptacle 4 having a wire mesh bottom 5 is mounted horizontally directly over the magnet, suitable agitating means 6 being provided for moving the receptacle horizontally.

The paper, cloth, or other form of sheet material 7 is coated with a suitable adherent as glue and is then fed over the table 2 beneath rolls 3, to hold it flat, while resting on its surface. The abrasive grains which have previously been coated with the finely divided magnetic dust are placed in the receptacle 4, which is then agitated in any suitable manner as by the reciprocating means indicated, so that the grains will be showered onto the adhesively coated sheet as it is fed over the pole of the magnet. The lines of force of the magnet passing from one pole to the other have principally an approximately vertical direction close to the surface of the sheet and will cause the magnetically coated grains, most of which will be somewhat elongated, or will have one dimension substantially greater than the dimension at right angles thereto, to be polarized as they fall, so that, assuming the pole at the top of the magnet is positive, the negatively magnetized ends of the grains will be attracted and the positive ends repulsed, and they will be turned while falling into approximately perpendicular relation to the face of the sheet, with the result that the ends of the elongated grains will penetrate the adhesive coating and will stand upright thereon, as indicated in Figs. 1 and 3. As hereinafter explained, it is an object of the invention to provide a final product in which the grains are substantially all arranged with their major axes substantially perpendicular to the carrier sheet and the further operations are performed to provide a material having these characteristics.

The adhesive will then be permitted to set while still held horizontally and, after this has occurred, the surplus grains which did not penetrate or touch the adhesive will be shaken off.

The material after these operations have been performed does not have the arrangement of the particles effected by the magnetic field appreciably disturbed. In other words, the resulting abrasive sheet will have practically all the elongated abrasive grains thereon oriented to stand perpendicularly, so that the shredding efficiency of the sheet will be much greater than if they lie flatwise of the sheet, on account of the superior cutting qualities of the ends of the abrasive grains, as compared with the sides thereof. The coating of abrasive grains, which is applied to the sheet will also be of greater thickness than it would be if the grains were not positioned on the sheet in perpendicular relation thereto.

I claim:

1. The method of making attrition sheets

[fol. 550]

which consists in placing a sheet having an adhesive surface in a magnetic field, so that the lines of force pass approximately perpendicularly therethrough and showering magnetically coated elongated grains of abrasive material onto said surface.

2. The method of making attrition sheets which consists in providing a sheet of suitable material with an adhesive surface, showering granular abrasive material containing a substantial portion of elongated grains onto said surface and simultaneously magnetically positioning said elongated grains, as they fall, in approximately perpendicular relation to said surface, so that the end portions of said grains may penetrate said surface and become bonded thereto in approximately perpendicular relation thereto.

3. The method of making attrition sheets which consists in covering one surface of a sheet with a suitable adhesive material, passing the sheet while held horizontally with its adhesive side uppermost through the field of a magnet so that the lines of force thereof pass mainly approximately perpendicularly through the sheet and showering magnetically coated elongated abrasive grains through the field of the magnet onto said surface.

4. The process of making abrasive material which comprises providing a magnetic field, feeding a carrier having a surface coated with adhesive through said field with the lines of force of the field at an angle to the adhesively coated surface of the carrier, causing abrasive particles of a character responsive to magnetic action to be deposited on the carrier, utilizing the field to arrange the particles on the adhesive surface with their major axes substantially perpendicular to the adhesive surface, and conducting the abrasively coated carrier away from the field as the particles are deposited thereon.

5. The process of making abrasive material which comprises providing an electromagnetic field, feeding a carrier having a surface coated with adhesive through said field with the lines of force of the field at an angle to the adhesively coated surface of the carrier, causing abrasive particles of a character responsive to electromagnetic action to be deposited on the carrier, utilizing the field to arrange the particles on the adhesive surface with their major axes substantially perpendicular to the adhesive surface, and conducting the abrasively coated carrier away from the field as the particles are deposited thereon.

6. The process of making abrasive material which comprises providing a magnetic field, feeding a carrier having a surface coated with adhesive through said field with the lines of force of the field at an angle to the adhesively coated surface of the carrier, causing abrasive particles of a character responsive to magnetic action to be deposited on the carrier, utilizing the field to arrange the particles on the adhesive surface with their major axes substantially perpendicular to the adhesive surface, conducting the abrasively coated carrier away from the field as the particles are deposited thereon, and performing the finishing operation to produce a material having the particles with their major axes substantially perpendicular to the adhesive surface.

7. The process of making abrasive material which comprises providing an electromagnetic field, feeding a carrier having a surface coated with adhesive through said field with the lines of force of the field at an angle to the adhesively coated surface of the carrier, causing abrasive particles of a character responsive to electromagnetic action to be deposited on the carrier, utilizing the field to arrange the particles on the adhesive surface with their major axes substantially perpendicular to the adhesive surface, conducting the abrasively coated carrier away from the field as the particles are deposited thereon, and performing the finishing operation to produce a material having the particles with their major axes substantially perpendicular to the adhesive surface.

8. The process of making abrasive material which comprises providing a magnetic field, feeding a carrier having a surface coated with adhesive through said field with the lines of force of the field at an angle to the adhesively coated surface of the carrier, causing abrasive particles of a character responsive to magnetic action to be deposited on the carrier, utilizing the field to arrange the particles on the adhesive surface with their major axes substantially perpendicular to the adhesive surface, conducting the abrasively coated carrier away from the field as the particles are deposited thereon, and permitting the adhesive to set while maintaining the carrier substantially horizontal.

CHELLO S. BUCKNER.

[fol. 551]

Jan. 7, 1936. E. C. SCHACHT 2,027,308

MANUFACTURE OF ABRASIVE ARTICLES

Original Filed Nov. 20, 1931

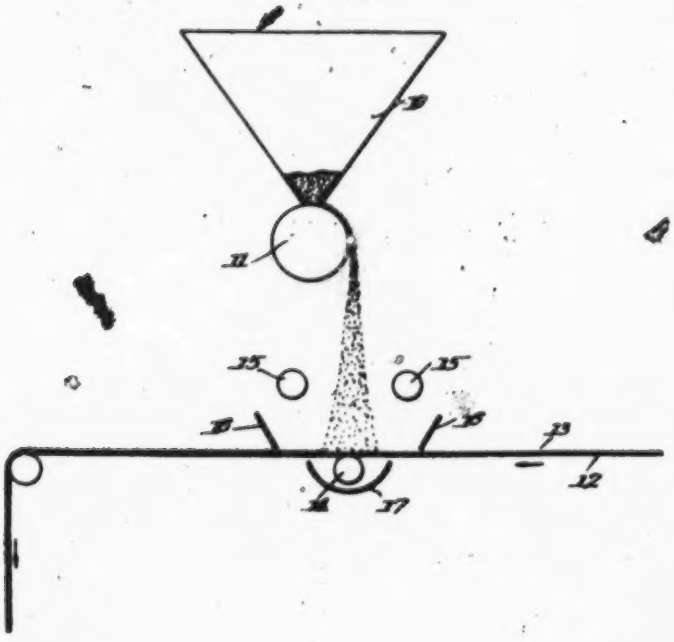

Inventor

Elmer C. Schacht.

By Cushman, Darby & Cushman

Attorneys

[fol. 552]

Patented Jan. 7, 1936

2,027,308

UNITED STATES PATENT OFFICE

2,027,308

MANUFACTURE OF ABRASIVE ARTICLES

Elmer C. Schmidt, Troy, N. Y., assignor, by mesne assignments, to Behr-Manning Corporation, a corporation of Massachusetts

Application November 20, 1931, Serial No. 576,415
Renewed January 7, 1935

5 Claims. (Cl. 91—38)

My invention relates to the manufacture of abrasive articles and particularly flexible abrasive material such as sand paper wherein the abrasive particles are applied to the adhesive surface of a backing or carrier.

The primary object of the invention is to produce a sand paper having optimum cutting efficiency, and wherein the particles are uniformly dispersed, oriented and stratified upon the surface of the backing.

It is a further object of the invention to control the positions of the particles upon the carrier by means of an electrical field which will enclose the sand column adjacent to and about its point of contact with the carrier.

In accordance with the present invention wherein the positions of the sand particles is very definitely controlled, I am enabled to obtain (a) a uniform dispersion to produce a level sand distribution having the maximum number of cutting points, (b) an orientation of the particles such that the longest axes and sharpest edges produce maximum cutting effect, and (c) a stratification or classification whereby the coarser fractions are positioned in the top plane where they produce maximum abrading effect.

The invention is applicable to the manufacture of both "closed coated" and "open coated" sand paper.

In the drawing, the single figure is a diagrammatic view of the invention.

In carrying out the invention, I employ a hopper 10, in which are disposed the abrasive particles. A feed roller or gate 11 is disposed at the mouth of the hopper, so that the particles may be fed in controlled amounts gravitationally.

The particles will comprise the usual mixture, namely of "under grade", "control grade" and "above grade", in which the "control grade" usually predominates.

A carrier or backing 12 of paper, cloth, or laminated structure of the two is arranged to be continuously moved in a position over suitable supporting rollers 13 to receive the sand particles fed from the hopper. This backing or carrier has its surface coated with a suitable adhesive 14 and travels in the direction indicated by the arrows. Disposed below the carrier 12 is an electrode 14, which will be suitably charged from a source of high potential. The electrode will preferably carry a negative charge and will comprise a bar, cylinder or other desired form of element, preferably of the length to extend across the transverse dimension of the web 12.

On the other side of the carrier, there is placed a pair of opposed grounded terminals 15.

At this point, it should be understood that the terminals 15 may be charged and the terminal 14 grounded. I may also use a pair of charged terminals 15 and a pair of grounded terminals 14 or vice versa.

In lieu of these expedients, I may also employ reversely charged terminals wherein the electrode or electrodes below the web will be charged negatively and the electrode or electrodes above the web are charged positively, from a suitable source of high potential, or vice versa.

Referring to the drawing, the terminals 15 are preferably disposed out of the normal gravitational path of the sand column and at a suitable distance, depending upon the voltage employed, from the electrode 14 as to produce a thoroughly satisfactory electrical field. The electrode or ground 14 is preferably placed in close proximity to the under surface of the backing as shown, but the spacing of the various terminals or electrodes with respect to each other and to the carrier may be varied in accordance with the product being made, the strength of the field and the nature of the particles.

In the embodiment shown, the intensity of the electrical field will be greatest at and about the point where the lines of force created between the terminals 15 and the electrode 14 converge, namely at and about the sand column where it contacts with the web.

By employing such a construction the particles are attracted to the backing by the electrode 14, at the same time acquiring a charge which causes them to be mutually repellent and hence shower or fan out.

By reason of the electrical field created in any of the several ways described, the control of the deposition of the particles upon the web is very efficiently cared for.

Thus the intensity of the field is greatest at and about the point of contact of the sand column with the web and I am enabled to obtain (a) a uniform dispersion to produce a level sand distribution having a maximum number of cutting points, (b) an orientation such that the particles are positioned with their longest axes and sharpest edges producing a maximum cutting effect, and (c) a stratification or classification whereby the coarser fractions are disposed in the top plane where they produce an optimum abrading result.

It will be understood that with the feed of the particles regulated from the hopper by means of

the gate 11 to accord with the character of sand paper it is desired to produce, that the particles will be propelled by gravity to a point adjacent the continuously moving backing above the electrode 14 and between the terminals 18, reaching the paper or web at the point of conversion of the lines of force created by the electrodes or terminals and which is the point of greatest electrical intensity. Thus a field is produced at and about the sand column which creates the repellent action of the particles and causes them to fan-out in a definite manner, depending upon the strength of the field which may be regulated to alter the effect.

I have illustrated in the drawing two shields 16 disposed adjacent the backing and which extend across the transverse area thereof. These shields in some cases are useful to confine the particles in the event there is an undue fanning-out or showering and are preferably made of insulated material or suitably insulated. I also place beneath the electrode 14 a shield 17 of insulated material and the respective shields cooperate in addition to confining the particles, to enhance the intensity of the electrical field produced through the medium of the several electrodes or terminals. These shields, of course, may be omitted but I find them very satisfactory for both functions recited.

While I have referred herein to sand as the abrasive medium, it will be understood that other abrasives of a particle nature are operable in accordance with this invention.

The electrodes, as stated, may be arranged in various ways and their spacing with respect to each other and to the backing, may be varied at will in accordance with the character of the coating desired, the strength of the field and the particular article which is being made.

It will be understood that the invention enables a very careful and accurate control to the end that a uniform dispersion, orientation and stratification are obtained and an article having optimum abrading efficiency is formed.

What I claim is:

1. In an apparatus of the class described comprising a feeding means for abrasive particles, means for supporting a carrier having an adhesive surface to be coated with said particles below said feeding means, and means for forming an electrical field comprising terminals on one side of the carrier between which the particles pass in their path to the carrier and a terminal of opposite polarity on the other side of the carrier disposed substantially intermediate the said first mentioned terminals, whereby to narrow and intensify the field at the point of disposition of the particles upon the carrier.

2. An apparatus of the class described comprising a gravity feeding means for abrasive particles, means for supporting a backing having an adhesive surface to be coated with said particles, an electrode disposed in close proximity beneath the backing when the latter is supported on said means, and a pair of spaced terminals disposed on the other side of the backing and creating with said electrode a substantially V-shaped electrical field embracing the abrasive column at and about its point of contact with the carrier.

3. An apparatus of the class described comprising a feeding means for abrasive particles, means for supporting and continuously moving a carrier having an adhesive surface to be coated with said particles, a terminal disposed in close proximity beneath said carrier when supported on said means, and a pair of spaced terminals disposed above said carrier between which the particles are adapted to pass in their path to the carrier, the respective terminals creating a substantially V-shaped electrical field having its greatest intensity at and about the point of contact of the abrasive column with the carrier.

4. An apparatus of the class described comprising a feeding means for abrasive particles, means for supporting and continuously moving a carrier having an adhesive surface to be coated with said particles, a terminal disposed in close proximity beneath said carrier when supported on said means, and a pair of spaced terminals disposed above said carrier between which the particles are adapted to pass in their path to the carrier, the respective terminals creating a substantially V-shaped electrical field having its greatest intensity at and about the point of contact of the abrasive column with the carrier, and shields of insulated material disposed adjacent the carrier and about the electrode beneath the carrier.

5. In an apparatus of the class described comprising a feeding means for abrasive particles, means for supporting a carrier having an adhesive surface to be coated with said particles, and means for forming an electrical field comprising terminals of opposite polarity on opposite sides of the carrier, said terminals cooperating to narrow and intensify the field and converge the same at the point of disposition of the particles upon the carrier.

ELMER C. SCHACHT.

[fol. 554].

HILL, SHERMAN, MERONI, GROSS & S
THE FIRM OF CHARLES W. H
1414 MONADNOCK BUILDING
53 W. JACKSON BLVD.
CHICAGO 4, ILL

Jan. 7, 1936. E. C. SCHACHT 2,027,308

ABRASIVE MATERIAL

Filed March 24, 1932 3 Sheets-Sheet 1

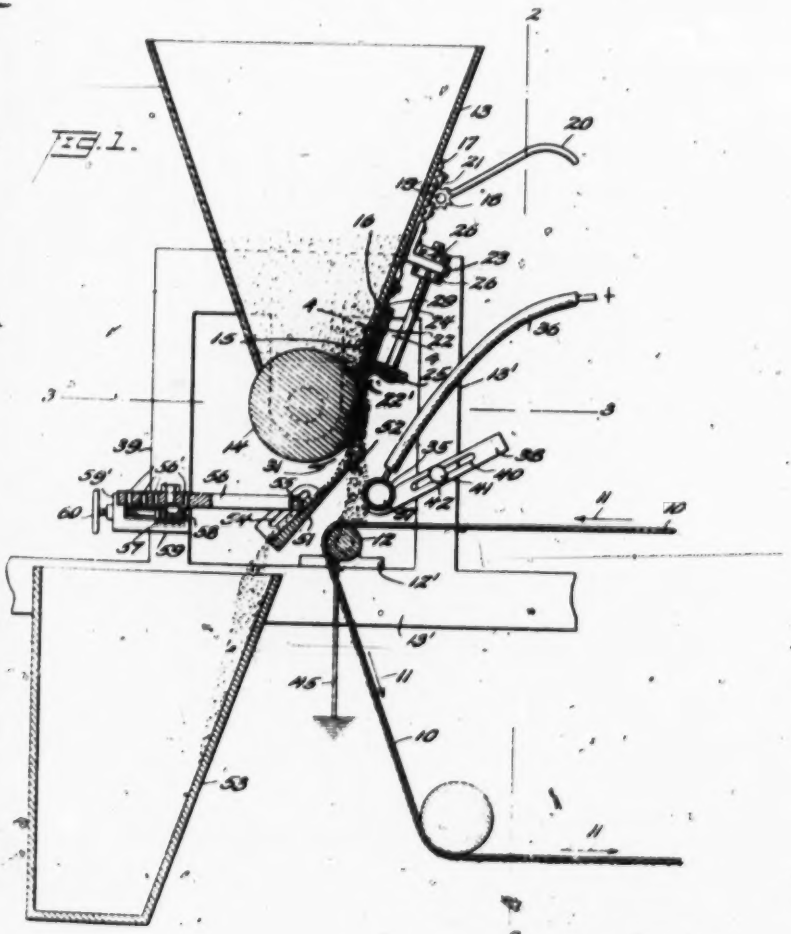

Inventor

Elmer C. Schacht.

By Cushman, Darby & Cushman

Attorneys

[fol. 555]

Jan. 7, 1936. E. C. SCHACHT 2,027,309

ABRASIVE MATERIAL

Filed March 24, 1932 3 Sheets-Sheet 2

FIG 2.

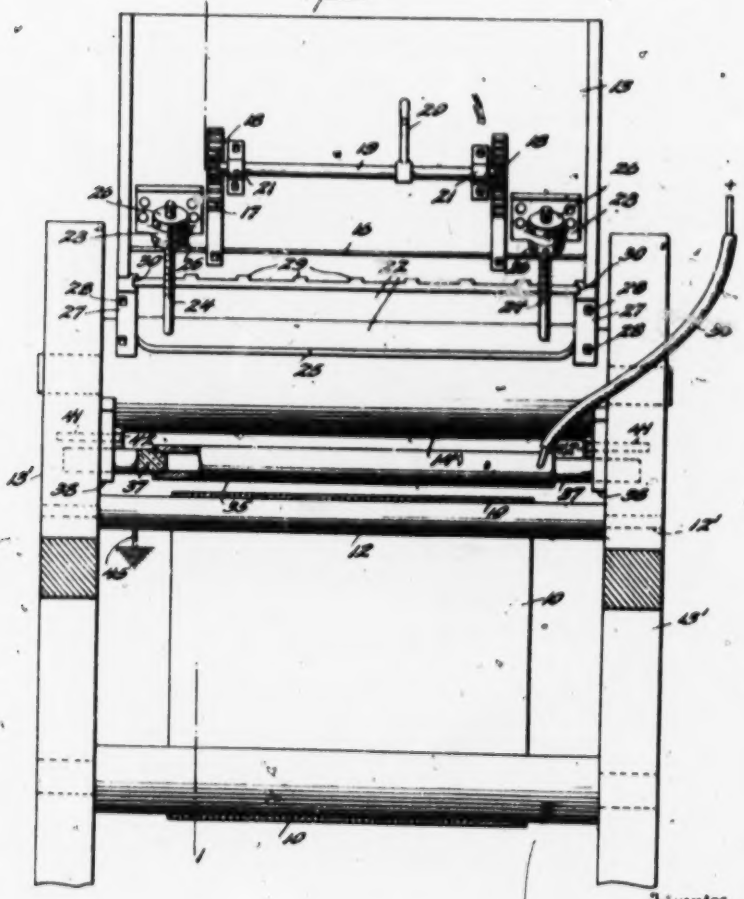

Inventor
Elmer C. Schacht
By Cushman, Darby & Cushman
Attorneys

[fol. 556]

Jan. 7, 1936. E. C. SCHACHT 2,027,309

ABRASIVE MATERIAL

Filed March 24, 1932 3 Sheets-Sheet 3

FIG. 3.

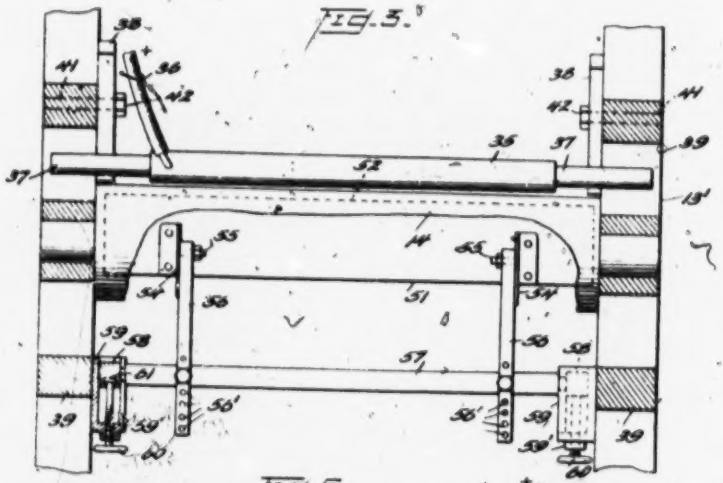

FIG. 6.

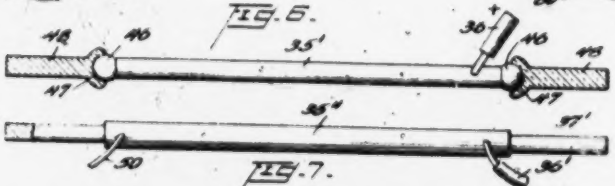

FIG. 7.

FIG. 4.

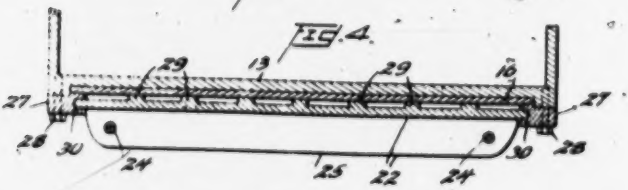

FIG. 5.

Inventor

Elmer C. Schacht,

By Cushman, Darby & Cushman,

Attorneys.

[fol. 557]

Patented Jan. 7, 1936 2,027,309

UNITED STATES PATENT OFFICE

2,027,309

ABRASIVE MATERIAL

Elmer C. Schmidt, Troy, N. Y., assignor to Behr-Manning Corporation, Troy, N. Y., a corporation of Massachusetts

Application March 24, 1933, Serial No. 661,961

1 Claim. (Cl. 51—188)

This invention relates to the art of coating with finely divided or fragmentary material.

An object of the invention is to provide an abrasive article in which the abrasive particles are individually oriented thereon i. e., with their major axes arranged substantially perpendicularly to the carrier for the particles so that their sharpest portions are exposed.

A further object of the invention is to provide an abrasive article in which the particles are stratified in accordance with their size.

A further object of the invention is to provide an abrasive article in which the particles are secured to the base by means of adhesive and individually oriented and stratified according to their size.

The invention contemplates an arrangement or distribution control which will effect proper distribution or dispersion of the particles with reference to one another, and preferably also the proper positioning or orientation of each individual particle, so that in providing a coated surface of abrasive material, for instance, the particles are arranged with their major axes substantially perpendicular to the carrier with the result that the sharpest portion of each particle will be exposed.

The method and apparatus will be described in their application to the manufacture of an abrasive paper, such as sand paper, although it will be understood that while particularly useful in the manufacture of such material, the invention is not limited in broader aspects to this particular field.

Abrasive paper, by which is meant any abrasive sheet or strip material having an abrasive surface formed of abrasive particles, ordinarily consists of a backing or carrier of paper or fabric, or combined paper and fibric, which is first provided with an adhesive surface upon which the abrasive or cutting material, such as sand, is then deposited.

Abrasive paper is of two general types. In one type, the adhesive surface of the carrier or backing is completely covered with the abrasive grains or fragments. The individual grains are closely packed, so that virtually no portion of the backing surface is exposed. Such a coating of abrasive material is commonly called a "closed coating".

In the second type, the individual particles or grains are spaced apart as uniformly as possible over the surface, so that substantially all of the particles stand by themselves alone or as units of the abrasive surface. Such a coating of abrasive material is termed an "open coating".

The open coating is considered preferable for abrasive paper in some usages, since it does not tend to load or become packed with the material which is abraded. In some cases, a closed coating, in which the interstices between the individual grains are extremely small, and virtually non-existent, quickly becomes loaded or embedded with the material abraded, and this results in excessive friction and finally the burning of both the abrasive and abraded surfaces. Such loading and burning is especially noticeable when abrading soft materials or materials of a gummy or resinous nature. The open coating overcomes this objection, since in view of the substantial space around each of the abrasive grains, the abrasive surface does not become packed, and the particles removed from an abraded object do not remain in the interstices between the individual grains.

In the manufacture of both types of coating, it is preferable to arrange or orient the individual grains so that their major axes are substantially perpendicular to the carrier with the result that their sharper and more pointed portions are exposed. Furthermore, in the formation of an open coating, it has always been a problem to obtain the desired arrangement or dispersion of the individual grains with reference to one another. This dispersion or spacing of the individual particles is a problem particularly important in the formation of an open coating, but the proper distribution of the particles as they are deposited upon the carrier is also important in the manufacture of a closed coating. In the manufacture of the closed coating, it is customary to drop or deposit upon the adhesively coated carrier a greater amount of abrasive than it can hold. The surplus is then removed. Consequently, the only control as to the amount of abrasive retained is the holding capacity of the adhesive. In order to control accurately the amount of abrasive applied on a closed coating, it is, therefore, important to see that the surface is uniformly covered, and due to this it is necessary that the particles be uniformly distributed at the instant the abrasive is applied to the adhesive. When the particles are simply dropped on the adhesively coated carrier and no dispersing method employed, the resultant surface reflects any irregularities which are present in the fall or passage of the sand, and these irregularities produce streaks or ridges in the coating. It has also been found that there is a tendency in dropping sand or other abrasive particles for

[fol. 558]

the latter to bunch together and produce what is called a lumpy or bunchy coating which greatly impairs the cutting efficiency of the sheet because there are created a multiplicity of small high areas which come in contact with the surface to be abraded. Obviously, these areas keep much of the abrasive out of contact with the surface being abraded, and thus reduce the efficiency of the sheet.

It will be understood, therefore, that by the terms "disperaion" or "arrangement", as applied to the particles, is not meant any particular spacing of the particles relative to one another, since the particles are "dispersed" or "arranged" relative to one another regardless of whether an open or closed coating is being formed. So far as the method of this invention is concerned, the difference between an open and closed coating resides solely in the extent or degree to which the electrostatic field is used, i. e. a stronger field or different disposition of the same is employed to produce an open coating than a closed coating. But in the manufacture of both types of coating, the electrostatic field may be effectively employed to produce the desired arrangement or dispersion of particles in the abrasive stream.

Heretofore, it has been the common practice to supply the abrasive material, such as sand, from a hopper by means of a feed roll having associated therewith an adjustable gate which controls the feed of sand. In the use of coarser grades of sand or abrasive material, such a means for controlling its application has been found to be effective, to a certain extent, since coarse sands will not bind or pack between the gate and the feed roll and will flow uniformly between the gate and roll to produce an open coating upon the carrier. However, it has been observed that this expedient does not effectively guarantee the uniformity of particle distribution or the equalization of density throughout the different areas, and, moreover, it has no effect upon the sharpness of the abrasive surface produced, and does not have a tendency to arrange each individual particle so that its sharpest portion or point is exposed.

In the use of fine abrasive material, such as number 240 sand, a feed gate and roll or similar apparatus does not produce a uniform flow, even though the gate and feed roll surfaces are finely ground and brought extremely close together. The difficulty is particularly due to the tendency of the sand to pack or bind in the gate. As a result, the abrasive surface is characterized by bare spots, blotches, bars and streaks.

Consequently, in the manufacture of abrasive paper from fine abrasive material, it is necessary to exercise extreme care to obtain a uniform flow of sand and to finely grind and adjust both the gate and feed roll.

The present invention seeks to provide an improved means for obtaining proper arrangement of the sand both with respect to the uniform dispersion or spacing of the particles relative to one another, and also with respect to the arrangement or orientation of each particle considered individually to arrange each particle with its major axis substantially perpendicular to the carrier and expose its sharpest portion.

The invention also contemplates an improved apparatus for carrying out this method.

Essentially, the invention comprises the use of an electrical charge produced by an electrostatic field, which is arranged so as to influence the individual sand particles to obtain the proper distribution of the same over the surface, and also preferably, to position each particle so that its sharpest and therefore most effective abrasive portion is exposed.

The invention also contemplates the use of the electrical field in such a manner that the stream of abrasive particles, as it flows toward the carrier, is controlled by the electrical field so as to cause a uniform distribution of the same relatively to one another, and thus produce a misting of the particles over a much greater area and eliminate ridges and streaks as well as the bunchiness or lumping in the coating.

In providing the electrostatic field, the invention seeks to dispense with the necessity for accurately grinding and spacing the gate and feed roll. It has been found preferable to dispose the field so that it will affect the sand as it travels toward the surface of the carrier to be coated, thus permitting the field to disperse the entire sand-shower. The method also contemplates the selecting off from the dispersed or electrified shower, as by means of a baffle, any excess sand not desired, and permitting the remainder to drop with the particles in their properly dispersed relation and also individually oriented, i. e. sharpest points up, upon the adhesive surface. By properly arranging the electrostatic field, the method will also maintain a predetermined relation between each particle and it is oriented, i. e., with its major axis disposed substantially perpendicular to the carrier, in the field until it is united with the surface, thus obtaining exposure of the sharpest and most abrasive portion of each particle.

In carrying out the method, a supply of sand may be arranged in a hopper above an adhesively surfaced carrier or backing. The hopper may, if desired, be provided with an adjustable gate and feed roll for controlling to a certain extent the showering of the sand upon the adhesive surface to be coated, although the sand may be dropped toward the carrier in surplus quantities. The electrostatic field is disposed between the carrier and gate, so that the sand must travel through or adjacent the field before it reaches the carrier.

The sand particles are each influenced by the electrical charge, which serves to fan or spread out and disperse the shower, maintaining the particles in substantially uniformly spaced relation until they reach the carrier. It will be found that the voltage or power of the field may be regulated to control the extent to which the particles are fanned out or dispersed, and, of course, a factor in this control will be the character of the coating desired. If a closed coating devoid of ridges or bunchiness is desired, the field will be of a character which will simply provide the uniform distribution necessary to prevent these defects. If an open coating is required, the field will be controlled so as to disperse the particles relatively to one another to a greater extent. If the sand is showered in surplus quantities, a baffle or diverting plate may be suitably arranged to divert from the normal path of the shower any portion thereof which it is desired to exclude from the carrier. The position of the baffle will, of course, vary depending upon the character of the coating desired, and the amount of sand being showered toward the carrier surface.

The particles not led off from the shower continue on to the carrier and fall upon its adhesive surface. Due to the dispersing action of the electrostatic field, the particles are deposited upon this surface in substantially uniformly spaced relation, thus providing an ideal open coating.

When applied to an abrasive medium such as sand, the electrostatic field has been found to be extremely efficient, and even though the controlling gate is opened quite wide to overcome the packing tendency of fine sands, and to provide a flow in excess of that required to use a coating, the use of, the field will properly disperse the entire shower from which may be led off such excess portions as are not to be permitted to fall upon the adhesive surface. The use of such an excess flow eliminates the necessity for maintaining the gate and feed roll accurately ground or adjusted, and moreover, the irregularities of sand flow due to surface imperfections on the gate or roll have been found to be relatively small in relation to the large amount of sand flowing.

As will be understood, the deposition of the particles upon the carrier uninfluenced by any force which tends to oppose the effect of the electrostatic field, except, of course, the weight of the particles themselves, permits the field to effect desired control of position and the particles are, as a result, arranged upon the carrier under the influence of the field substantially unaffected by any other force.

Furthermore, it has been found that the resultant abrasive surface is much sharper than a surface produced by simply dropping the material upon the carrier, even though attempts may be made to control the arrangement of the same by other media than electrical means.

In obtaining the proper orientation of each individual particle with its sharpest portion exposed, it is thought that the field causes substantially each particle to align itself so that its longest axis is virtually parallel to the lines of force of the field or, in other words, substantially perpendicular to the carrier surface. The rate of discharge of an electrostatic charge is dependent upon the surface characteristics of the charged body, and the larger the radius of curvature, the slower the rate of discharge, and the sharper the point, the faster the rate of discharge. It is believed that this relation of the rate of discharge of the surface characteristic of the charged body, e. g. sand grain with a pointed abrasive portion, causes the sharpest points of the grains to orient themselves so as to discharge in the direction of the field, with a result that since the lines of force of the field intersect the carrier, the particles are deposited upon the surface with their sharpest points directed toward the electrostatic field, and away from the supporting surface. Consequently, the points are made to project outwardly, and the resultant coating is very much sharper than a coating made without the use of an electrical force for orienting or arranging each individual particle. Obviously, of course, such an arrangement or orientation of the particles is useful in either a closed or open coating, since it (1) increases the sharpness of the coating and enables faster and easier cutting, (2) minimises heating and loading, and (3) increases the cutting life or capacity of the abrasive surface.

Moreover, it will be clear that the use of the electrostatic field in the formation of a closed coating prevents lumping or bunching of the sand by distributing the same over the entire area or surface to be coated. It blends out the irregularities which would otherwise develop in the stream due to lack of uniformity in the feed gate and to other factors which modify the effect of gravity, or other means which may be used to direct the stream to the carrier.

It will be understood, of course, that the electrostatic field can be used as a dispersing means with any type of particles whether abrasive or non-abrasive, to insure a uniform distribution, and irrespective of the nature of the substance or carrier upon which they are being deposited.

In the manufacture of sand paper, the electrostatic field is particularly useful. Although, in producing any particular grade of paper the particles are of approximately equal size and weight, it has, for many years, been the practice to use particles known as (a) control, (b) undergrade, and (c) overgrade; the control particles predominate. It has been found that the electrostatic field utilized in the manner herein described tends to stratify the particles and cause to locate on the top surface the larger particles, that is, the particles having larger areas of cutting surface.

It will be understood, therefore, that the control or change of position of the various particles effected by the field has three characteristics: First, the particles are oriented or turned by the lines of force, so that their major axis are substantially perpendicular to the carrier surface or parallel the lines of force of the field with the result that the sharper surfaces of the abrasive coating are exposed. Second, the various particles are stratified so that the larger or more effective particles are on the surface. Third, the particles are dispersed to produce a more uniform coating, due to the fact that they are mutually repellent.

The dispersion of the particles is caused by the fact that, as they enter the field, they acquire a charge of the same polarity as one of the electrodes of the field, and since all of the particles have been graded to approximately the same size, although some are undergrade, some are overgrade and others are control particles, they all acquire a charge of approximately equal intensity and of the same polarity. Hence, all of the particles in any shower, as they pass through the field, are mutually repellent with substantially an equal repelling force, and thus arrange themselves so that they are substantially equidistant in all directions. This repellent action is effected not only as the particles pass through the field, but on the carrier.

It is preferred that the electrical field be arranged at the point of deposition of the particles, so that this control of position is exercised at the point of deposition and at the time the particles strike the carrier. As a consequence, the positions of the particles will be controlled before the adhesive has set and will be effected on the carrier as well as in the path of the particles to the carrier.

In practicing the method, various forms of apparatus may be employed, and in the accompanying drawings showing a preferred form:

Figure 1 is a vertical sectional view on substantially the line 1—1 of Figure 2.

Figure 2 is a vertical sectional view on the line 2—2 of Figure 1.

Figure 3 is a horizontal sectional view on the line 3—3 of Figure 1, with the feed roll shown in elevation, and partly broken away.

Figure 4 is a fragmentary sectional view on the line 4—4 of Figure 1.

Figure 5 is a cross sectional view of a modified form of discharge electrode.

Figure 6 is an elevational view of a modified form of discharge or high potential electrode having its ends forged to eliminate "end effect", and

[fol. 560]

Figure 7 is a top plan view of another form of discharge electrode.

Referring to the accompanying drawings for a more detailed description, 10 indicates the carrier or paper sheet which may be fed in the direction of the arrows 11 by suitable means (not shown) over a roll 12 having end bearings in brackets 12' on the frame 13'. As will be understood, the paper has an adhesively coated top surface exposed to receive sand or other abrasive material dropped from a hopper 13, the lower end of which is partly closed by a feed roll 14. A wall of the hopper terminates at 15, a short distance above the feed roll to provide a discharge opening for the sand, which may be entirely closed by means of a shut-off gate 16 operable by means of a pair of rack bars 17 engaged by gears 18 upon a rock shaft 19, the latter carrying an operating lever 20 and being mounted in bearings 21 upon the wall of the hopper. The gate 16 is provided for the purpose of entirely shutting off the supply of sand when desired, and a second regulating gate 22 for adjusting the size of the opening between the lower end of the gate 16 and the periphery of the sand roll is adjustably mounted in brackets 23 by means of adjusting rods 24 secured to an outwardly extending rib 25 upon the gate, and extending through openings in the bracket. Clamping nuts 26 on opposite sides of the bracket webs through which the bolts 24 extend serve to secure the gate in any set position. As will be observed from Figure 4, the shut-off gate 16 is arranged between the regulating gate and the hopper wall, and it fits closely in a slideway formed by strips 27 secured to the hopper by bolts 28. The regulating gate 22 is provided on its rear surface with ribs 29 which abut the face of the shut-off gate and assist in providing a guideway for the same.

As the regulating gate is adjusted by means of the adjusting bolts 24, it is adapted to slide in grooves 30 (Fig. 4) formed in the strips 27 secured to the hopper.

When sand or other finely divided abrasive material is arranged within the hopper, operation of the feed roll in the direction of the arrow 31 (Fig. 1) after the shut-off gate has been opened and the regulating gate has been suitably adjusted, will cause the sand to drop downwardly in a shower toward the exposed adhesively coated surface of the carrier 10.

The amount of sand discharged between the periphery of the sand roll and the end 22' of the adjusting gate 22, will, of course, depend upon the adjustment of the gate.

An electrostatic field may be formed by means of a tube 35 connected, as by means of a lead wire 36, to a source of high voltage (not shown). The tube 35 may be supported at its ends by means of insulating posts 37 carried by brackets 38 upon the frame 13'. The brackets 38 may be provided with elongated slots 40 receiving bolts 41 with clamping nuts 42, whereby the position of the electrode may be varied as desired. The zero or ground potential side of the field may be provided by means of the paper carrying roll 12 which may be formed of suitable material and connected with the ground, as by means of a lead 43. The field formed by the tube 35 and roll 12 may be varied in intensity and extent, as desired. For instance, it is possible to make a field of higher unit intensity by reducing the diameter of the tube 35, or a broader field and one of lower unit intensity, by increasing the diameter of the electrode 35. Moreover, the proximity of ground or zero potential effects the field, and if desired, a multiplicity of tubes 35 may be employed.

In order to avoid "end effect", the ends of the tube may be rounded, as illustrated in Figure 6, wherein the tube 35' is provided with rounded ends or heads 46 which are seated in sockets 47 provided in the insulating post 48.

Furthermore, it has been found at times that by moving the tube 35, as by rotation, will have a pronounced effect upon the character of the field, and that instead of the tube 35, a solid rod may be employed if desired. In some instances, instead of a hollow tube, a wire brush, or a series of wires, such as piano wires, have been found to provide efficient electrodes and to alter the character of the electrostatic field to meet specialized conditions in the application of abrasive material.

Another modified form of electrode is shown in Figure 7, wherein the electrode is provided at one end with a substantially horizontally extending rigid strip 50 of metal, such as copper, wire or brass, and at the other end, the lead 36' is directed substantially horizontally, and is exposed for the purpose of providing in effect angularly bent ends of the electrode tube 35'', which may be supported upon the insulating posts 37'. The strip and exposed lead wire being directed toward the sand shower at an angle of about 45° to the tube, serve to decrease "end effect" and to fan out the edge of the sand shower, which, as will be understood, in dropping upon the abrasive material passes through the field. As the sand enters the electrostatic field, the particles are dispersed, and in such dispersed relation are deposited upon the adhesive surface of the carrier 10. The effect of the field is to fan out or spread the shower of sand, as illustrated in Figure 1, and ordinarily it has been found that it is preferable to position the regulating gate 22, so that an excess or surplus amount of sand is discharged from the hopper. In order to divert from the normal path of flow such quantity as should not fall upon the carrier, a baffle or diverting plate 51 is positioned with its surface inclined upwardly toward the feed roll, and with one edge 52 entering the shower of sand. This baffle serves to direct a portion of the shower over its surface downwardly into a hopper 53, from which the sand may be removed as desired.

In order to provide suitable means for varying the position of the baffle, so that the amount of sand selected off from the shower may be accurately regulated, the baffle is provided with a pair of upstanding slotted lugs 54, into the slots of which project clamping bolts 56 carried by adjusting arms 58 (Figure 3) which are positioned upon a cross head 57 having end blocks 58 slidably mounted in brackets 59 upon the frame 39. Adjusting screws 60 are threaded in walls 59' of the brackets 59 and have heads 61 swivelled in the boxes 59. As will be understood, manipulation of the screws 60 will guide the blocks and cross head 57 toward and from the sand shower, and thus move the baffle horizontally. The angular portion of the baffle may be varied at the clamping bolts 56, and as will be observed, the arms 54 are provided with a series of openings 54' so that their effective length may be altered.

In Figure 8 there is shown a modified form of electrode comprising an electrified tube 62, which is arranged within a tube 63 of considerably larger diameter and in electrical contact with the electrified tube, by which it is supported. The outer tube considerably enlarges the effective diameter

of the electrode, and as will be understood, broadens the field produced. The rod 32 may be connected to a source of high voltage in any suitable manner (not shown).

In operating the apparatus, the position of the baffle 34 will, of course, determine the portion of sand showered from the hopper which will be permitted to fall upon the adhesive surface. As has been explained, instead of bringing the end 22' of the gate close to the feed roll, even with extremely fine sands, in order to determine the exact amount of sand necessary to make the coating desired, the gate is preferably opened sufficiently wide to overcome the packing tendencies of said sands and to obtain a uniform flow, which is in excess of that required to produce a satisfactory coating. The comparatively heavy flow of sand eliminates the necessity for keeping the gate and feed roll perfectly ground, because the irregularities in the sand flow due to surface imperfections on the gate or roll, are very small in proportion to the large amount of sand flowing. As the sand stream leaves the gate, it passes within the influence of the electrostatic field, and immediately causes a dispersion of the particles or a fanning out or widening of the stream or shower. As has been explained, this dispersion can be varied by changing the characteristics of the field by any of the means described. Moreover, varying the voltage controlling the field will control the dispersing action of the same. The adjustment of the baffle 34 will regulate the amount of the shower, which is diverted from the path toward the surface to be coated, and in ordinary practice, it will be found that the control of the amount of grain applied and the character of the coating may be effectively controlled by varying the voltage without making adjustments in the apparatus. As will be understood, the abrasive material may be deposited in any degree of depth, from an extremely thin deposit approximately one particle thick to a thick deposit, and in any coating particles will not only be distributed with great uniformity, but will individually oriented or deposited with their major axes at right angles to the abrasive surface.

As will be observed (Fig. 1) the abrasive coated carrier passes from the electrostatic field and is conducted away without mechanically or otherwise compacting the surface, thereby leaving the particles uniformly distributed and individually oriented in which condition they are, of course, maintained.

Since the tube 38 is sufficiently long (Fig. 2) to extend beyond the edges of the paper, the sand will be uniformly applied throughout the entire width of the same, and by properly regulating the speed of travel of the paper, the sand may be continuously applied as the paper travels over the roll 12 to a take-up roll (not shown).

By the expression "adhesively retaining" as used with reference to the retention of the particles upon the carrier, is meant the use of means other than electricity for retaining by adhesive action the coating material upon the carrier. By "abrasive" is meant any abrasive or coating material in fragmentary form; by "carrier" is meant any desired material or support on which the fragmentary or divided material may be superimposed or deposited; by "controlled" or "regulated" as applied to the supply or feed of finely divided material to the carrier is meant simply that the material is supplied in such a way as to be responsive to the action of the electrical field for the result desired, whether dispersion or orientation or both.

Obviously, numerous modifications may be made in the structure illustrated and described without departing from the invention, the essence of which is more definitely set forth in the following claim.

This application is a division of my co-pending application Serial No. 290,233, filed July 30, 1928.

What I claim is:

A new article of manufacture having abrasive particles positioned relative to one another by electric action, substantially all of the abrasive particles at the abrading surface being substantially uniformly spaced apart and having major and minor axes and being responsive to electric action, substantially all of said particles being positioned and supported in an adhesive with their major axes substantially perpendicular to the abrading surface.

BLAKER C. SCHACHT.

[fol. 562]

June 1, 1937. E. C. SCHACHT 2,082,182

MANUFACTURE OF ABRASIVE ARTICLES

Filed Nov. 20, 1931

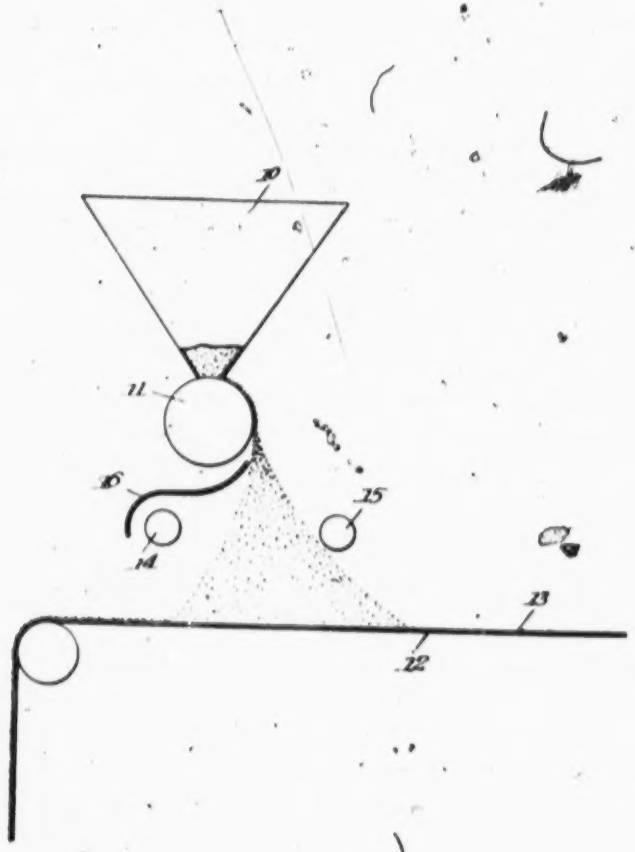

Inventor

Elmer C. Schacht.

By Cushman, Darby & Cushman

Attorneys

Patented June 1, 1937

2,082,182

UNITED STATES PATENT OFFICE

2,082,182

MANUFACTURE OF ABRASIVE ARTICLES

Elmer C. Schmidt, Troy, N. Y., assignor, by mesne assignments, to Behr-Manning Corporation, a corporation of Massachusetts

Application November 30, 1931, Serial No. 578,414

4 Claims. (Cl. 91—68)

My invention relates to the manufacture of abrasive articles and is particularly concerned with the production of flexible abrasive material of which one example is sand paper.

An object of the invention is to produce a sand paper having a maximum abrading efficiency by means of a process wherein the particles are dispersed to form a uniform coating upon the adhesive surface of a web or carrier.

I have found that if an electrical field be provided between a hopper or other feeding source and the web to be coated, which field will be so disposed that the lines of force cross the gravitational path of the particles and preferably parallel to the surface of the carrier, the particles will acquire a charge rendering them mutually repellent and in addition to the gravitational force, will be controlled by the action of the lines of force both in their movement to the web and in the manner in which their positions are controlled upon the adhesive surface of the web.

By reason of the present invention, there is obtained a uniform dispersement to produce a level sand distribution having the maximum number of cutting points.

The invention is applicable in the manufacture of both "open coated" and "closed coated" sand paper and may be used with varying grades and sizes of particles.

In the drawing:

The figure is a diagrammatic view of the invention.

Referring to the drawing, the numeral 10 indicates a hopper in which are disposed the abrasive particles which are preferably usually employed in the manufacture of sand paper.

The particle mixture comprises the customary "under grade", "control grade", and "over grade" in which the "control grade" predominates.

Disposed below the hopper is a suitable gate 11 which will preferably be adjustable, so as to control the feed of the particles from the hopper. The particles are released from the hopper in controlled amounts to a web 12, which is preferably provided with an adhesive surface 13. The web may consist of paper, cloth or a laminated material composed of paper and cloth, or in fact any usual backing or carrier known in the art employed.

Disposed with its lines of force directed transversely across the gravitational path of the particles between the feed roller 11 and the horizontally disposed web 12, is an electrical field created from a source of high potential.

At this point it will be observed that the web 12 is continuously fed in a preferably horizontal direction in accordance with the arrow, being supported and carried over suitable rollers 11, and that the lines of force created by the electrical field are substantially parallel to the web.

The field is created by reason of the spaced electrodes 14 and 15, one of which will be charged and the other grounded. In the present instance, I have shown the electrode 14 as negatively charged and the terminal 15 grounded. Obviously this arrangement can be reversed.

The lines of force of this field, as stated, are parallel to the surface of the carrier and are disposed entirely at one side thereof and in the present instance above the carrier.

The strength of the field will be varied in accordance with the nature of the particles and the character of the coating required, and can also be varied in accordance with the distance of the field from the web.

It should be understood also that the feed of the particles may be regulated in accordance with the strength of the electrical field.

Upon reference to the drawing, it will be observed that by reason of the lines of force set up in the field, the particles become charged and thus mutually repellent, causing them to shower or fan-out.

By reason of this process, I obtain a uniform dispersement to produce a level sand distribution having maximum number of cutting points.

The electrodes 14 and 15 may be a greater or less distance apart, depending upon the article to be prepared, and the nature of the abrasive particles and, as stated, the strength of the field may be varied.

By reason of the process, the web having an adhesive surface is continuously coated and it is only necessary that the feed and the strength and position of the field be suitably regulated, whereas the positions of the particles is controlled.

In some cases, I find it desirable to employ a screen or shield 16 to confine the particles, although this is not essential.

My invention is adapted for the production of either "open coated" or "closed coated" paper and while I have referred herein to sand specifically as the abrasive material, it will be understood that other abrasives of a particle nature are equally with this invention.

It will be clear that the gravitational feed of the particles from the hopper 10 and feed roller or gate 11, causes them to enter the electrical field and pass therethrough. Upon becoming charged the particles are mutually repellent and

[fol. 564]

their direction is changed from that due to the gravitational force alone, to a resultant which is the combined effect of the gravitational force and the respective repellent actions of the particles to each other, plus the action of the lines of force. In this manner, the disposition of the particles upon the carrier is controlled to produce the desired effects of uniform dispersement, resulting in an abrasive surface having the particles permanently associated and possessing a maximum cutting efficiency.

What I claim is:

1. In the art of preparing abrasive articles, wherein abrasive particles are deposited upon the adhesive surface of a backing, the steps which comprise feeding the particles as individually separated bodies to and through an electrical field in which the electrodes creating the same are disposed entirely at one side of the carrier whereby the particles must pass through the field in their travel to the carrier, and passing the particles from the field to adhesive surface of the backing in a direction constituting an alteration of the action of the gravitational force due to the mutual repulsiveness of the particles and to the lines of force created by said field whereby the particles are applied to the adhesively coated backing in dispersed relation.

2. In the art of preparing abrasive articles, wherein abrasive particles are deposited upon the adhesive surface of a backing, the steps which comprise feeding the particles as individually separated bodies to and through an electrical field in which the electrodes creating the same are disposed entirely at one side of the carrier and having its lines of force parallel to the surface whereby the particles must pass through the field on their way to the carrier, and passing the particles from the field to the adhesive surface of the backing in a direction constituting an alteration of the action of the gravitational force due to the mutual repulsiveness of the particles and to the lines of force created by said field whereby the particles are applied to the adhesively coated backing in dispersed relation.

3. In the art of preparing abrasive articles, wherein abrasive particles are deposited upon the adhesive surface of a backing, the steps which comprise continuously feeding the particles as individually separated bodies to and through an electrical field in which the electrodes creating the same are disposed entirely at one side of the carrier whereby the particles must pass through the field in their travel to the carrier, and passing the particles from the field to a continuously moving backing having an adhesive surface in a direction constituting an alteration of the action of the gravitational force due to the mutual repulsiveness of the particles and to the lines of force created by said field whereby the particles are applied to the adhesively coated backing in dispersed relation.

4. In the art of preparing abrasive articles, wherein abrasive particles are deposited upon the adhesive surface of a backing, the steps which comprise continuously feeding the particles to and through an electrical field in which the electrodes creating the same are disposed entirely at one side of the carrier and having its lines of force parallel to the surface whereby the particles must pass through the field on their way to the carrier, and passing the particles from the field to a continuously moving backing having an adhesive surface in a direction constituting an alteration of the action of the gravitational force due to the mutual repulsiveness of the particles and to the lines of force created by said field whereby the particles are applied to the adhesively coated backing in dispersed relation.

ELMER C. SCHACHT.

[fol. 565]

June 10, 1941. E. C. SCHACHT 2,245,301

MANUFACTURE OF ABRASIVE ARTICLES

Filed Nov. 20, 1931

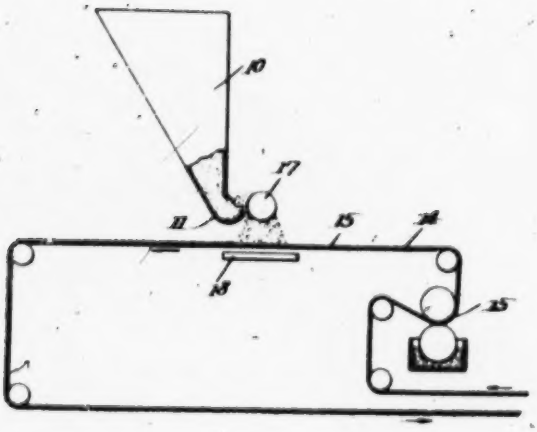

Inventor

Elmer C. Schaht.

[illegible]

Attorney

[fol. 566]

Patented June 10, 1941

2,245,301

UNITED STATES PATENT OFFICE

2,245,301

MANUFACTURE OF ABRASIVE ARTICLES

Elmer C. Schacht, Troy N. Y., assignor, by mesne assignments, to Behr-Manning Corporation, a corporation of Massachusetts

Application November 20, 1931, Serial No. 576,613

3 Claims. (Cl. 91—18)

The present invention relates to the manufacre of abrasive articles and is primarily concerned th the production of flexible abrasive material, which sand paper is one example. The process the present invention consists briefly in emoying an electrical field as the sole means of opelling the particles of abrasive to the back- or carrier whereby at a single step the backing ll be coated with a uniformly dispersed layer abrasive, oriented and stratified to produce an icle having an abrasive surface of maximum ciency.

The process is distinguished from prior methods erein electrically charged particles have been jected upon the backing after a preliminary tation in the presence of the electric field, ce not only must such particles be floated in er to acquire a charge, but a separate project- means such as a blower has been considered essary.

s stated, the present invention utilizes a sin- step to propel and efficiently control the posi- s of the particles upon the backing. In other ds, reliance is solely placed upon the use of the trical force.

y reason of the invention, there is produced a uniform dispersion of the particles to form vel and continuous sand distribution upon carrier presenting a maximum number of ing points, (b) an orientation of the parti- such that the longest axes and sharpest edges positioned to produce maximum cutting ef- and (c) a stratification or classification reby the coarser fractions or particles are osed in the top plane where they can produce aximum abrading effect.

further object of the invention is to pro- an abrasive article of a flexible character, as sand paper, wherein the particles are elled first substantially laterally only under rol of an electrostatic field and then down- dly under control of the electrostatic field. retofore with various methods, the abrasive icles have been applied downwardly without control to the top surface of the adhesively d backing or carrier, and this has required an amount of abrasive in excess of what is ired to form a satisfactory coating, be fed he carrier and this excess subsequently re- d. When this excess of abrasive particles ed, the efficiency of the abrasive coating pro- d is reduced because the excess abrasive par- are afforded an opportunity to position selves or be accommodated in the voids be- n the permanently secured particles which have these two effects: (a) where fine or small sized excess particles fill up the voids between the permanently secured particles, then the necessary clearance between the cutting edges is reduced which has the final effect of reducing the cutting capacity of the coating and promoting rapid "filling" or "loading" with attendant burning and short life. In a measure it has the same effect as reducing the size of cutting particles since a smaller fraction of their total effective edges will now come into use; (b) where nominal size or over-grade excess particles become secured in the voids between the permanently secured particles there is produced in effect a superimposed layer of poorly secured particles since only a corner or edge of the larger grains can imbed itself between the permanently secured particles leaving the major portion of the grain in question to extend above the true abrading surface. This superimposed or secondary coating is objectionable because (1) it is a waste of grain; (2) it requires more sizing glue in the secondary step of sandpaper manufacture in order to hold on this superimposed coating with the result that the majority of the real abrasive surface is oversized, that is, overglued which greatly decreases its abrading efficiency; (3) in the finished article, these top particles above the level of the vast majority of particles on the true abrasive surface, are in themselves insufficient in number to really accomplish any removal of stock but in bringing sufficient pressure on the coating to cause the article being sanded to engage the real abrasive level, the higher or superimposed particles are either broken off or if sufficiently well imbedded, remain on the coating to scratch and injure the finish of the piece being sanded.

In the usual method of coating in which an excess of abrasive is employed, a means is positively provided which insures the creation of the superimposed coating while in the applicant's method, a positive control is provided to prevent the excess particles from filling up the voids between the permanently secured particles.

The invention is applicable for the manufacture of both "open coated," and "closed coated" sand paper, and is particularly useful where the sand particles are not of exactly uniform size and shape.

In the drawing the figure is a diagrammatic view of the invention.

The numeral 10 indicates a hopper in which the sand or other abrasive particles will be disposed. The hopper is provided with an upturned mouth. The backing or carrier 14 may consist of paper,

cloth, or a lamina of these two materials, and in fact any flexible backing as now used in the art. The backing is fed from a roll over suitable guide rollers to an adhesive applying device which will apply to the surface of the web a coating of adhesive 18.

The abrasive particles which are fed from the hopper are those customarily employed and constitute a mixture of "over grade," "below grade," and "control grade," in which the "control grade" predominates.

It will be observed that reliance is only had upon the electrical field as the means for propelling the abrasive particles to the backing and controlling their position upon the surface thereof.

No recourse is had to any accelerating means such as a blower nor are the particles preliminarily agitated in the field before they are propelled. As heretofore stated, where the particles are preliminarily floated or agitated in the field, it has been found essential that some additional positive projection means such as air be employed which I find prevents any control of the dispersion and destroys any possibility of orientation or stratification of the particles upon the adhesive surface of the backing.

In the drawing, I have illustrated the hopper 10 as being provided with an upturned mouth 11 and the abrasive particles are attracted therefrom laterally in one direction i. e., substantially laterally only to the field of the electrode 17, whereupon they are directed downwardly by reason of the field created between the electrode 17 and terminal 18, which is disposed below the web, and the electrode 17 as shown.

In this construction, as with that illustrated in Figure 1, the particles are propelled to the backing, oriented and stratified thereon solely by means of the electrical field of the oppositely polarized terminals 17 and 18.

The electrode 17 which is preferably negatively charged from a source of high potential, may take the form of an elongated bar or cylinder extending substantially across the transverse dimension of the web so that the entire surface of the web will be coated with the abrasive particles. Referring particularly to Figure 2, the electrode 17 will preferably be fixed but this electrode may be rotated, if desired.

I may transpose the method and construction in such manner that the movement of the particles to the web will be in a horizontal direction or in planes at an angle to both the vertical and horizontal without departing from the spirit of the invention.

No change is necessary other than that of transposing the web 14 to assume a vertical position in proximity to the roller 17, which, in the lateral propulsion, can be continuously rotated if desired.

It will, therefore, be seen that I have completely eliminated the necessity for preliminarily floating or agitating the particles in an electric field as well as the necessity for providing some positive means such as a blower for projecting such electrically charged particles upon the adhesive surface of a backing. Moreover, by propelling and controlling the positions of the particles upon the carrier in a single step as described, the control of the abrasive coating is positively assured.

The value of an effective control will be appreciated since reliance is had only upon a single factor, namely the electrical field, the strength of which may be varied, as occasion arises, and likewise, the spacing of the electrode 17 from the web may be changed to suit conditions as well as the strength of the field. By eliminating the necessity for a preliminary floating or agitation of the particles, or of using some additional positive projecting means, the control obtained is not interfered with in the slightest and the particles are attracted to the web 14 and their positions controlled thereon by reason of the single and complete effect of the electrical field, the intensity of which may be controlled and varied.

A further and important feature of the invention resides in the fact that the abrasive particles may be fed continuously to the electrostatic field, by means of the charged bar or conveyor 17.

The invention, it will be observed, assures a complete control of the disposition of the particles upon the web and enables the production of a sand paper which possesses (a) a level and uniform distribution of the sand particles, (b) an oriented disposition wherein the longest axes and sharpest edges of the particles are arranged to produce maximum cutting effect, and (c) a stratification or classification whereby the coarser particles or fractions of the abrasive mixture are positioned in the top plane of the completed article to exert the optimum abrading effect.

The construction and method illustrated possesses the very valuable advantage in that material is conserved and that an abrasive coating is produced which has a level top surface with all cutting points in the same plane and no undesirable superimposed particles. This feature is of particular importance since it is to be observed that by attracting the particles upwardly, there is avoided any tendency of a secondary surface to be built up over the permanently secured abrasive coating.

The invention achieves a final coated product having a maximum coating efficiency wherein the control of the particles and their propulsion to the carrier and disposition thereon is accomplished solely by the electrical means.

I claim:

1. An apparatus of the class described comprising a hopper for abrasive grit having an upwardly opening mouth, a negatively charged rotatable electrode disposed in such proximity to said mouth that grit is attracted laterally in one direction, means for moving a strip of backing material horizontally longitudinally beneath said mouth and electrode, means for applying an adhesive coat thereto and presenting the same upwardly, and a terminal immediately below said first electrode and said mouth and cooperating with the electrode for creating a field and directing the laterally projected grit downwardly into contact with the moving adhesive face of said strip.

2. An apparatus of the class described, comprising a delivering means for abrasive grain, a charged electrode disposed in such proximity to said grain-delivering means that grit is attracted first substantially laterally only therefrom to said electrode, means for moving a strip of backing material horizontally longitudinally beneath said grain-delivering means and said electrode, means for applying an adhesive coat thereto and presenting the same upwardly, and a terminal immediately below said first electrode and cooperating with the said electrode to create a field and then direct the laterally projected

[fol. 568]

grit downwardly into contact with the moving adhesive face of said strip.

1. A process of coating abrasive grits in oriented relationship onto an adhesively coated backing, comprising delivering grits from a grit storage means to an electrostatic field, passing an adhesively coated backing through an electrostatic field, first directing said grit substantially laterally only by means of the electrostatic field and then directing said grit along a vertical path by means of the electrostatic field to embed the grits into an adhesive coating superimposed upon the reinforcing backing, moving said coated backing from the electrostatic field and drying the adhesive.

ELMER C. SCHACHT.

[fol. 569]

April 14, 1942. J. O. AMSTUZ 2,279,361

ELECTROSTATIC COATING PROCESS

Filed Feb. 19, 1938

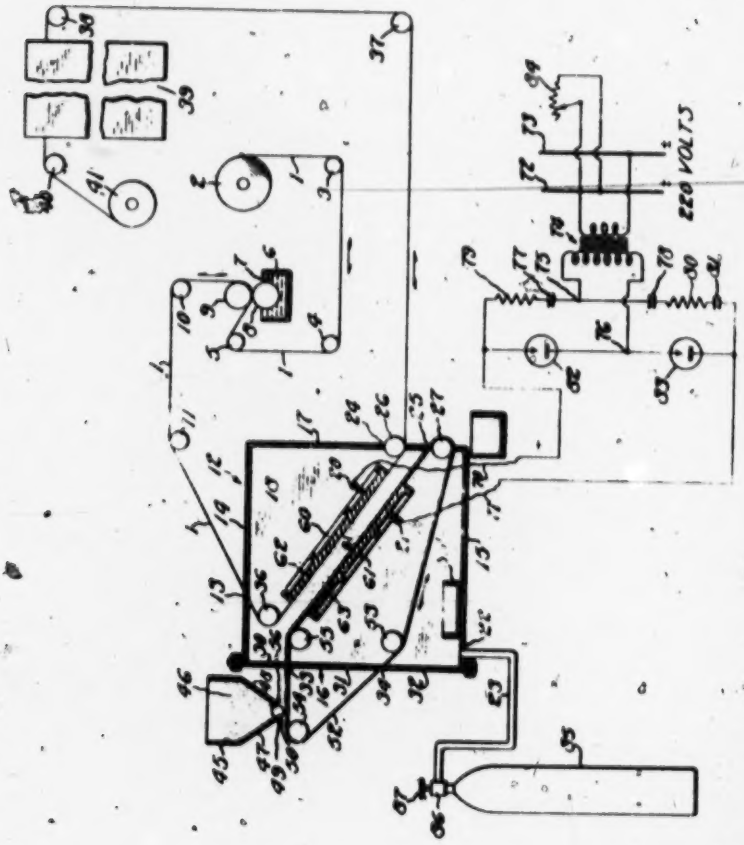

Inventor
JOHN O. AMSTUZ

By

[fol. 570]

Patented Apr. 14, 1942

2,279,361

UNITED STATES PATENT OFFICE

2,279,361

ELECTROSTATIC COATING PROCESS

John O. Amstutz, Troy, N. Y., assignor to Behr-Manning Corporation, Troy, N. Y., a corporation of Massachusetts

Application February 19, 1938, Serial No. 191,472

5 Claims. (Cl. 91—68)

The invention relates to an electrostatic coating process, and with regard to its more specific features to the manufacture of abrasive paper and cloth.

One object of the invention is to provide a process whereby the electrostatic coating of sheet material may be speeded up. Another object of the invention is to provide an improved method of electrostatic coating by means of which abrasive particles in the larger sizes may be more effectively handled. Another object of this invention is to provide an improved method of electrostatic coating permitting the manufacture of abrasive paper and cloth using larger and heavier abrasive particles than heretofore. Another object of the invention is to accelerate the production of sandpaper of the oriented abrasive particle type. Another object of the invention is to provide an electro-coating method and apparatus permitting the use of smaller electrodes.

Another object of the invention is to reduce the possibilities of short circuits or arcing over between the electrodes, especially when the field stress between the electrodes is close to the breakdown value. Another object of the invention is to reduce the possibility of short circuit between the electrodes when binders are used which are inflammable or are apt to cause explosive mixtures or when binders are used which have low flash points or when temperatures are used which cause rapid evaporation of inflammable binders. Other objects will be in part obvious or in part pointed out hereinafter.

The invention accordingly consists in the features of construction, combinations of elements, arrangements of parts, and in the several steps and relation and order of each of said steps to one or more of the others thereof, all as will be illustratively described herein, and the scope of the application of which will be indicated in the following claims.

In the accompanying drawing in which is shown one of various possible embodiments of the mechanical features of this invention, the single figure is a diagrammatic representation of electrostatic coating apparatus constructed according to the invention and by means of which the process may be carried out.

The invention is equally applicable to the coating of cloth with abrasive or other comminuted material and also paper with abrasive or other comminuted material, for the production of abrasive cloth and abrasive paper, respectively, and in fact may be applied to the coating of any sheet material and even material which is not flexible, although it has special features of advantage when applied to the coating of flexible sheet material. It may be used for the application of comminuted material other than abrasive material to a surface, such as flock or piled surface products as used in the garment and shoe and textile industry. However, it will be more particularly described in connection with the manufacture of sheet abrasive material, of which abrasive coated paper, still familiarly referred to as "sandpaper," will be used as an illustrative example.

Referring now to the drawing, I provide a quantity of paper 1 initially in the form of a roll 2. The paper 1 is directed around a roller 3 and then around a roller 4 and up to a roller 5. I provide a glue trough 6 which may be suitably heated and in which is glue 7 or any other suitable adhesive for the manufacture of sandpaper or abrasive cloth. In the glue trough 6 and immersed in the glue 7 is a roller 8 above which is a roller 9. The paper 1 passes between the rollers 8 and 9 and then up to a roller 10. One or more of the rollers 3, 4, 5, 8, 9 and 10 are positively driven at a given peripheral velocity in order to feed the paper, this mechanism not being shown as it is well understood.

From the roller 10 the paper 1, now having a coating of glue on the upper side thereof, passes over a roller 11 and into a chamber 12. The paper 1 passes through a long slot 13 which is just wide enough to take the paper without contact between the paper or the glue thereon and the upper wall 14 of the chamber 12. The chamber 12 may take many different forms but as shown it is substantially a box-like structure, being a rectangular parallelopiped in shape and having the top wall 14 referred to, a bottom 15, back and front walls 16 and 17, a side wall 18, and an opposite similar side wall, not shown. The wall 18 and the opposite wall may be substantially imperforate excepting that insulating sleeves 20 and 21 may be provided for the introduction of electric potential, as hereinafter more particularly pointed out. The bottom 15 is preferably imperforate excepting for an opening 22 to receive a pipe 23. The front wall 17 may be imperforate excepting for openings 24 and 25 in which are mounted rollers 26 and 27 by means of any suitable journals, not shown. Preferably the back wall 16 is made in three detachable sections 30, 31 and 32 suitably fastened to the other parts of the chamber 12, in order that ready access may be gained to the inside of the chamber and so that the apparatus may be readily as-

sembled. This construction leaves slots 33 and 34 in the back wall 16 which are preferably narrow.

The paper 1 passes through the slot 13 and then around a roller 36 and through the chamber 12, passing around the roller 26, out of the chamber 12 and to a roller 37, then up and over a roller 38 to a drying chamber 39, thence over a roller 40 to the winding take-up roller 41. Abrasive is applied in the chamber 12.

The take-up roller 41 is driven at a varying angular velocity to wind the finished paper into the roll thereof 42 which increases in diameter, and one or more of the rollers 26, 36, 37, 38 and 40 may be positively driven, if desired.

I provide an abrasive hopper 45 supplied with suitable abrasive 46 therein. For the manufacture of sandpaper and abrasive cloth, I may use any suitable abrasive, such as silicon carbide, alumina, either fused alumina or any of the natural forms such as emery and corundum, also garnet and silica or sand. The bottom of the hopper 45 has inclined side walls 47 and 48 in between which is a bottom opening 49 with a delivery roller 50 which fits close to the wall 47 on the back side and has a somewhat larger opening on the front side, the roller 50 being positively rotated, for example in a clockwise direction, to deliver abrasive material at a fairly constant rate to a traveling belt 52. The traveling belt 52 is preferably a few inches wider than the paper 1 and it travels through the chamber 12 and outside thereof over and around the roller 27 and also rollers 53, 54 and 55 which may be located substantially as shown, the belt 52 passing through the slot 33 into the chamber 12 and through the slot 34 out of the chamber 12 to get the abrasive material which is deposited at 56. It will be seen that the belt 52 for a substantial distance runs parallel to the paper 1. Roll 27 is connected to a variable speed motor and acts as a driving roll for the belt. The belt speed can thereby be increased or decreased in order to feed more or less grain into the chamber 12 in order to control the sand weight.

I provide suitable electrodes which may be in the form of metal plates 60 and 61, for example made out of aluminum in order that they be not excessively heavy. These plates 60 and 61 may also have the rib-like construction shown, likewise for lightness, but preferably they have perfectly plane surfaces 62 and 63 which are parallel to each other and face each other. The paper 1 and the belt 52 pass between these surfaces 62 and 63, as shown. A conductor 70 passes through the insulating sleeve 20 and is connected to the electrode 60. A conductor 71 passes through the insulating sleeve 21 and is connected to the electrode 61.

I provide a source of electric current in alternating form, for example 220 volts at 60 cycles, in main line conductors 72 and 73. The line 72 and 73 is connected as shown to the primary of a transformer 74, the secondary of which is connected to terminals 75 and 76. Terminal 75 is connected to plates of condensers 77 and 78. The other plate of condenser 77 is connected to the conductor 70 through a resistance 79. The other plate of condenser 78 is connected to a resistance 80 which is connected to one plate of a condenser 81, the other plate of which is connected to the conductor 71. Two rectifiers 82 and 83 are connected in shunt across the conductors 70, 71 and to the terminal 76 as shown. The potential difference or coating voltage at the terminals 70 and 71 ranges from about 5,000 to 70,000 volts. This voltage range is obtained by the insertion of a voltage regulator 84 into the 220 volt side of the transformer 74. This may be a rheostat, as shown.

The rectifier set as shown in the drawing supplies a unidirectional current to the electrocoating unit. This kenotron rectifier can be replaced by a thyratron converter set which supplies the electrocoating unit with alternating current, pulsating direct current or any desired form of current of definitely controlled characteristics.

As the conveyor belt 52 carries the abrasive over the electrode 61 which is preferably in contact with the belt 52, the abrasive receives a charge and, attracted by the electrode 60, and repelled by the electrode 61, it jumps the gap between the belt and the paper and becomes embedded in the glue or other adhesive on the paper. By reason of the electrostatic field with the abrasive particles having like charges of electricity, the abrasive material is evenly and equally spaced and, furthermore, is oriented so that the long axis of each particle is normal to the paper upon which it is deposited.

Electro-coating, as previously practiced, has been somewhat restricted due to the fact that air ionizes in a field of the intensity of about 30,000 volts per centimeter. The field intensity varies with the temperature of the barometric pressure. A practical formula for calculating the intensity at which air reaches the break-down value due to ionization is believed to be as follows. The formula is only accurate for flat electrodes and a spacing or sparking distance greater than ½".

$$H = 81\sqrt{2} \times \frac{b}{273+t}$$

H = maximum field intensity in kv./cm.
b = barometric pressure in centimeters.
t = temperature in degrees centigrade.

Since the force exerted in abrasive particles increases in proportion to the square of the field intensity, it is important to increase H as much as possible. Under substantially sea level conditions and room temperatures, the maximum value for air is around 30,000 volts per centimeter, as above stated. With greater field intensities the air is ionized and becomes a conductor, under which conditions the field intensity drops to practically zero.

The rate of production of sandpaper or abrasive cloth with a given apparatus is substantially a straight-line function of the speed of the material 1 through the apparatus. Therefore, it is desirable to achieve as high a speed as possible, other things being equal. For a given grade of sandpaper or abrasive cloth, there are particular specifications as to the amount of abrasive material to the square inch which have to be met as nearly as practicable. There are practical limits to the shortness of the gap 64 between the paper 1 and the belt 52 owing to the chance of actual contact of the glue with the belt which would interfere with the beneficial results achieved by the use of the electrostatic field involving equal spacing of the grains and orientation, and the fact that the abrasive particle should be allowed to jump a substantial distance in order to give it room enough and time enough in which to orient itself, as above specified, and also to allow several particles which may be bunched together to separate and space themselves properly. For all these reasons, in actual practice in the manufacture of sandpaper, it has

[fol. 572]

been found highly desirable and important to have the gap 91 at least ¾" wide, and the closest gap which has heretofore been found thoroughly practicable has been of the order of ½", whereas it is considered desirable in most cases to have a gap at least 1" wide. Furthermore, there are practical limitations on the length of the electrodes 90 and 91 in the direction of movement of the paper involving the use of a great deal of power if the electrodes have too large an area including greater opportunity for dielectric loss and because of space limitations and the desirability of applying the abrasive within a certain time limit following the coating of the paper with glue. As a practical matter, it has been found that with a gap of 1", the electrodes should be no longer than 6', that is to say the distance between the upper and lower rollers should preferably be not substantially greater than eight feet.

From the foregoing it will be appreciated that it has been desired to create a field intensity as great as possible but, as above explained, there have been definite limitations to the field intensity which could be employed and it should be noted that because temperature, humidity and barometric pressure vary, some margin has been heretofore provided in actual practice.

Referring to the attached drawing, I provide in the chamber 12 an atmosphere which ionizes at a substantially greater field intensity than air. There are many gases which have a greater break-down value than air. Many of them are dangerous, corrosive, or explosive. Others constitute a fire hazard. Among all the gases known for maximum stress higher than air, there are a number which are quite harmless. These gases may be used for our purpose of increasing the field intensity H between the coating electrodes. Among these gases are, for example, nitrogen (N_2), or nitrogen oxide (N_2O). On the other hand, I may use vapors of certain liquids in atmospheric air, for example vapors of methyl chloride (CH_3Cl) or carbon tetrachloride (CCl_4). Referring again to the drawing, I may provide a tank 96 containing the desired gas, fitted with the usual valve 96 connected to the pipe 23. By turning the handle 97 of the valve 96, gas is admitted to the chamber 12 in a steady flow so long as it lasts. Although there are various slots 13, 24, 25, 26 and 34 out of which the gas may flow, the direction of flow is substantially outward and the gas in the chamber 12 is substantially the gas provided in the bottle 96. I prefer to use such gases as nitrogen and nitrous oxide as they have little effect upon human beings in diluted quantities. I may provide suitable exhaust apparatus to convey away the gases as they escape. Satisfactory results are achieved even though the gas in the chamber 12 is not 100% pure nitrogen, nitrous oxide, etc., but contains a substantial quantity of air.

Figures for ionization of the gases mentioned, assuming 90% pure gas, 10% air, are substantially as follows:

$$\text{Nitrogen: } H = 132\frac{b}{273+t}$$

$$\text{Nitrous oxide: } H = 182\frac{b}{273+t}$$

or for b=76 cm. & t=20° C.
H max. for N_2=34.8 kv./cm.
H max. for N_2O=39.0 kv./cm.

As will be observed from the foregoing examples, it is possible with my invention to use a higher field intensity than has heretofore been possible. The field intensity is measured in volts per centimeter and with my invention it is, therefore, possible to operate with a higher voltage per centimeter or per inch of electrode gap or spacing than has heretofore been possible. Stated in another way, this means that, with a given electrode spacing, it is feasible to use a higher voltage across the electrodes by employing my invention than has heretofore been possible. Therefore, a stronger force may be exerted upon the particles being applied in the gaseous media that I provide than has heretofore been possible with air. I am, therefore, able to coat a backing sheet with the usual particles of various kinds with greater speed, and I am also able to coat with heavy particles which could not heretofore be successfully deposited by the electrostatic method. The essence of my process is, therefore, the provision of an atmosphere which ionizes at a higher potential than air, combined, preferably, with higher field intensities than have heretofore been practical with air.

Further referring to the drawing, I may provide instead of the bottle 96 or even in conjunction therewith a pan 98' containing any one of the liquids mentioned or suitable equivalents, and under normal conditions of temperature and humidity there will be produced in the chamber 12 a fair concentration of vapors from the liquid. Naturally the results are more variable with this procedure but in practice I am enabled to achieve, using the various liquids mentioned, field intensity values of 36.2 kv./cm. and 36.8 kv./cm., respectively, for methyl chloride and carbon tetrachloride in the formula—

$$H = a\frac{b}{273+t}$$

a for CH_3Cl=140
a for CCl_4=230

the above being the given value for a in respective cases.

In the use of the apparatus and method of the invention, manufacture of sandpaper may be speeded up as much as 30%. Furthermore, larger grit sizes may be used up to 2½ grit size. Furthermore, better results and better production can be achieved using the present apparatus and method because other factors including the size of the gap 91 and the length of the electrode 90 may readily be kept within safe limits, yet achieving a high rate of production.

Furthermore, gases or vapors may be used which will reduce fire hazards or prevent spark discharges or the sustaining of an electric arc between electrodes.

I mentioned in the above disclosure only a few gases or vapors as examples. There are many more which can be used and some are listed below:

Trichlorofluoromethane	CCl_3F
Dichlorotetrafluoroethane	$C_2Cl_2F_4$
Trichlorotrifluoroethane	$C_2Cl_3F_3$
Dichlorodifluoromethane	CCl_2F_2
Trichloromethane	$CHCl_3$
Trichloro acetyl chloride	CCl_3COCl
Dichlorofluoromethane	$CHCl_2F$
Dichloromethane	CH_2Cl_2
Chlorofluoromethane	CH_2ClF
Ethylene chlorohydrine	CH_2ClCH_2OH

Very effective are mixtures of nitrogen with some vapors or gases, for example, mixtures of

carbon tetrachloride, and nitrogen or dichlorofluoromethane and nitrogen.

It will thus be seen that there has been provided by this invention a method and apparatus in which the various objects hereinabove set forth together with many thoroughly practical advantages are successfully achieved. As various possible embodiments might be made of the mechanical features of the above invention and as the art herein described might be varied in various parts, all without departing from the scope of the invention, it is to be understood that all matter hereinbefore set forth or shown in the accompanying drawing is to be interpreted as illustrative and not in a limiting sense.

I claim:

1. The method of coating with comminuted material such as flock, which comprises providing a gaseous atmosphere which ionizes at a higher electrostatic field intensity than air, creating an electrostatic field in said atmosphere of an intensity which would create a danger of ionizing air but lower than that which ionizes the atmosphere, locating the article to be coated in said field and introducing the comminuted material into the field adjacent the article.

2. The method of coating with comminuted material which comprises creating an electrostatic field, locating the article to be coated in the electrostatic field, feeding the comminuted material to the electrostatic field, providing an atmosphere in the electrostatic field which ionizes at a higher field intensity than air, and raising the intensity of the field to an intensity that would create a danger of arc-over or ionization in air, but lower than that which creates such a danger in said atmosphere.

3. The method of coating sheet material which comprises coating the sheet material with adhesive on one side thereof, providing an atmosphere which ionizes at a higher electrostatic field intensity than air, creating an electrostatic field in said atmosphere of an intensity at least as high as one that would create practical dangers of arc-over in an atmosphere of air but lower than one that would create practical dangers of ionizing said atmosphere, feeding the sheet material through said field and feeding comminuted material to the electrostatic field, the coated side of the sheet material being disposed in proximity to the comminuted material as it is fed into the field.

4. In the production of piled surfaces by passing pile forming material adjacent an adhesive surface foundation material positioned in an electric field, the steps which comprise introducing into the field an atmosphere conditioning gas which ionizes at a higher field intensity than air, and raising the intensity of the field above an intensity that would create dangers of arc-over or ionization in air but lower than that which would create such dangers in the atmosphere as conditioned by said gas.

5 The method of coating sheet material with comminuted material which comprises introducing into a substantially enclosed space, a gas or vapor having the characteristic of ionizing at a higher electrostatic field intensity than air and thereby creating in said space an atmosphere which ionizes at a higher field intensity than air, creating an electrostatic field in said atmosphere of an intensity that would create a danger of ionizing air but lower than that which ionizes said atmosphere, conducting adhesively coated sheet material through said electrostatic field, introducing comminuted material into the field adjacent the adhesively coated surface of the sheet material, and projecting the comminuted material onto the adhesively coated surface of the sheet material by an electrostatic force of greater intensity than would be possible in an atmosphere of air alone.

JOHN O. AMSTUT.

[fol. 574]

June 30, 1942. J. S. SMYSER 2,287,837

METHOD AND APPARATUS FOR APPLYING COATING MATERIALS

Original Filed April 25, 1934 4 Sheets-Sheet 1

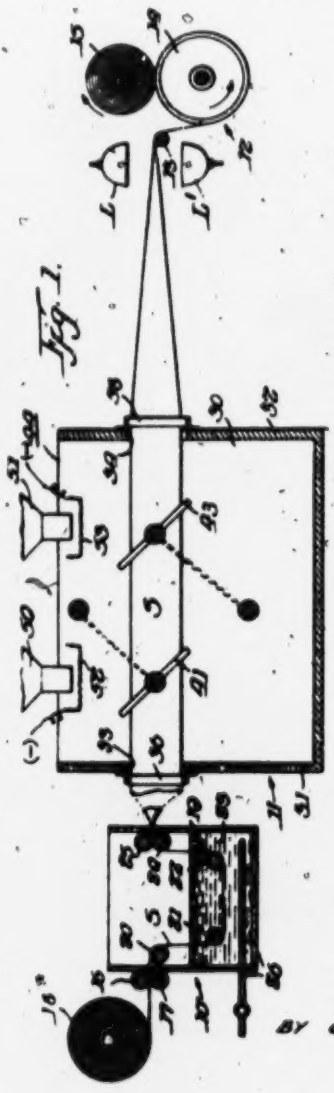

Fig. 1.

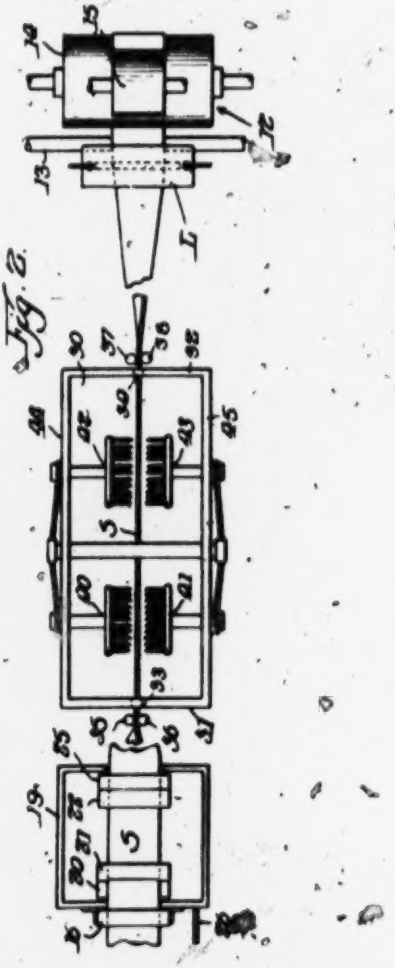

Fig. 2.

Inventor,
JAMES S. SMYSER, DECEASED,
BY GRANITE TRUST COMPANY, EXECUTOR
By Paul Chapin Atty.

[fol. 575]

June 30, 1942. J. S. SMYSER 2,287,837

METHOD AND APPARATUS FOR APPLYING COATING MATERIALS

Original Filed April 25, 1934 4 Sheets-Sheet 2

Fig. 3

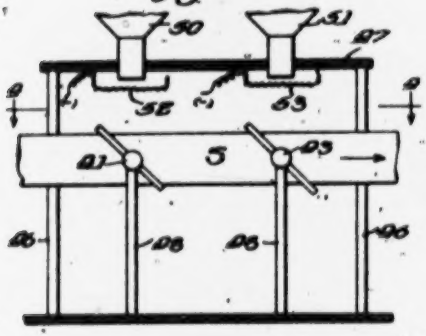

Fig. 5

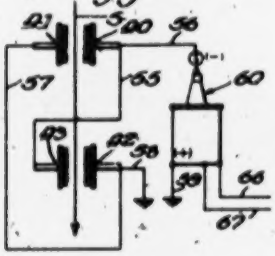

Fig. 5a

Fig. 4

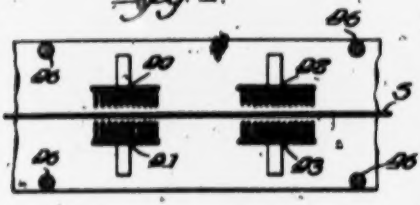

Fig. 6

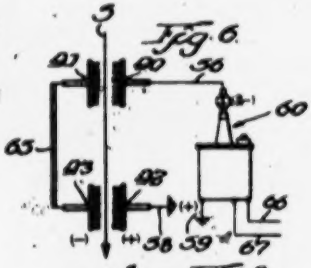

Fig. 7

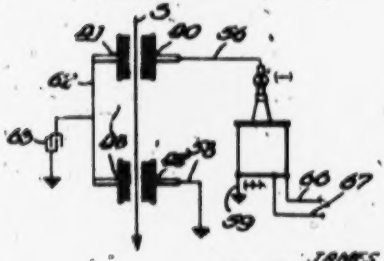

Fig. 8

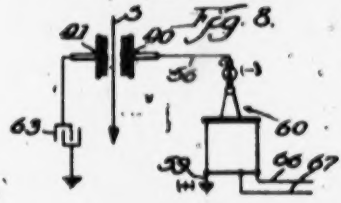

Inventor,
JAMES S. SMYSER, DECEASED,
BY GRANITE TRUST COMPANY, EXECUTOR.
By Paul Copeland Atty.

[fol. 576]

June 30, 1942. J. S. SMYSER 2,287,837

METHOD AND APPARATUS FOR APPLYING COATING MATERIALS

Original Filed April 25, 1934 4 Sheets-Sheet 3

Fig. 9.

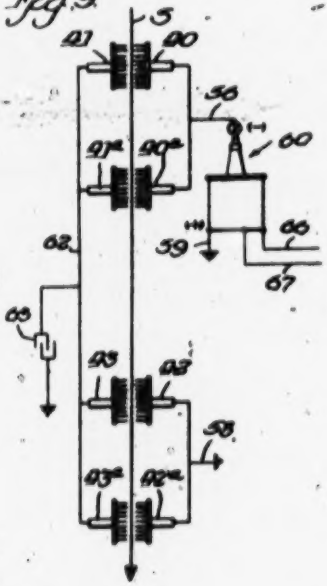

Fig. 11.

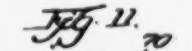

Fig. 12.

Fig. 13.

Fig. 15.

Fig. 14.

Fig. 16.

Fig. 10.

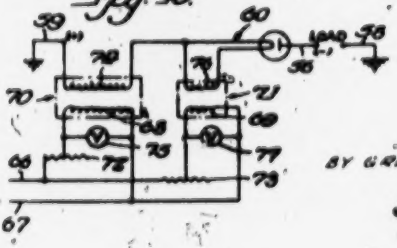

Inventor,
JAMES S. SMYSER, DECEASED,
BY GRANITE TRUST COMPANY, EXECUTOR
By Paul Capron Atty.

June 30, 1942. J. S. SMYSER 2,287,837

METHOD AND APPARATUS FOR APPLYING COATING MATERIALS

Original Filed April 25, 1934 4 Sheets-Sheet 4

Fig 17.

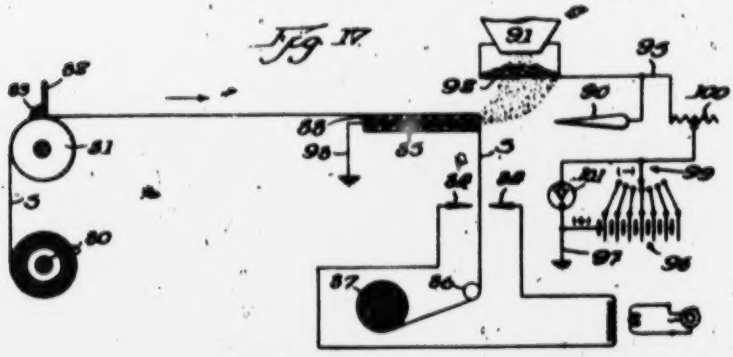

Fig 18.

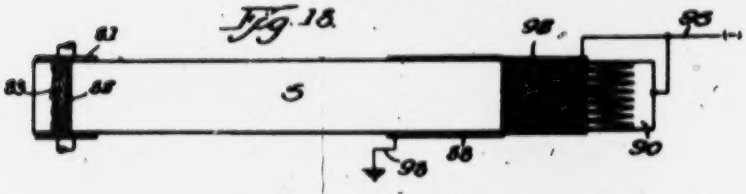

Fig 19.

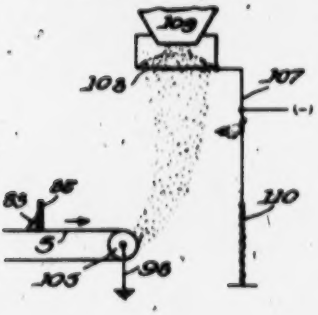

Fig 20.

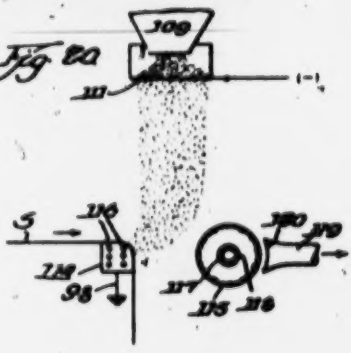

Inventor,
JAMES S. SMYSER, DECEASED,
BY GRANITE TRUST COMPANY, EXECUTOR,
By Paul Christensen Atty.

[fol. 578]

Patented June 30, 1942 2,287,837

UNITED STATES PATENT OFFICE

2,287,837

METHOD AND APPARATUS FOR APPLYING COATING MATERIALS

James S. Smyser, deceased, late of Quincy, Mass., by Granite Trust Company, executor, Quincy, Mass., assignor to Minnesota Mining & Manufacturing Company, St. Paul, Minn., a corporation of Delaware

Substituted for abandoned application Serial No. 722,[illegible], April 25, 1934. This application January 22, 1941, Serial No. 375,[illegible]

6 Claims. (Cl. 117—17)

This invention relates to a method of and apparatus for applying particles and various forms of comminuted materials to a base member, and to the resulting product.

This application is a continuation of the application of James S. Smyser, Serial No. 722,[illegible], filed April 25, 1934.

The principal objects of the invention are to provide a novel method and apparatus for applying particles and finely divided materials, such, for example, as flock, linters, and the like fibrous material, abrasive particles, etc., to one or more surfaces of a base member, such as a piece of sheet material; to provide means for controlling the manner and rate of application or disposition of the particles so as to obtain a uniformly coated product having predetermined characteristics; and to provide means whereby unlimited lengths of sheet material may be coated efficiently and progressively, on either or both sides, more quickly, densely, uniformly and cheaply than by any apparatus and/or method heretofore used.

Other objects of the invention are to provide a strong and flexible product having a dense, homogeneous, villous finish simulating the appearance of either suede or a pile fabric; and to provide a finish of any desired density wherein the major portion of the fibers are disposed at substantially the same angle relative to the surface of the base sheet with their ends firmly embedded in an adhesive coating carried thereby.

Further objects relate to the construction of the apparatus and to the mode of operation of the method, and will be apparent from a consideration of the following description and accompanying drawings which exemplify different embodiments of the invention in its apparatus, product and process aspects.

In accordance with the present invention the surface (or surfaces) of the base member, or article to be coated is first rendered adhesive, as for example by the application of a suitable cementitious material, such as rubber cement, wax, paraffin, glue, or the like adhesive. When thus coated the base member is passed through an electrostatic field set up between one or more pairs of oppositely charged electrodes, and during its passage through the electrostatic field the particles to be applied are carried in a uniformly dispersed formation into the field either by gravity, a current of air, or in any other suitable manner.

Preferably the particles being conveyed to the field are charged in any suitable manner with the same charge as that of the electrode projecting them against the base member, and to this end they may be passed through a metallic screen or the like member which is connected in the circuit of the projecting electrode. When thus charged, the particles, upon entering the electrostatic field are projected against the adhesive surface of the base member more uniformly and efficiently, and with much greater force than would otherwise be possible. Furthermore, the individual particles are more effectively aligned in the direction of the lines of force of the electrostatic field and, due to the increased force with which they are projected against the surface of the base member, are more deeply and firmly embedded in the adhesive surface of the base member. Moreover, migration of the charged particles toward the adjacent or projecting electrode is greatly minimized, if not substantially eliminated, and consequently considerable waste is eliminated and the efficiency of the method and apparatus is appreciably increased.

The construction and arrangement of the electrodes is such as to provide an electrostatic field of uniform flux density which extends across the path of the surface of the article to be coated and at an angle to its path of travel. The position of the individual particles relative to the surface of the base member may be controlled and /or varied by adjusting the relative position of the electrodes so as to attain the desired direction of the lines of force of the electrostatic field relative to the surface of the base member. To this end one or both of the electrodes may be adjustably mounted so that their position relative to each other may be varied.

The electrostatic field may be produced by a suitable source of potential such as a Kenotron or the like alternating current rectifier, a static machine, mechanical rectifier, or any other source which may be susceptible to control. The potential impressed upon or across the electrodes may vary within wide ranges, depending upon the character of the material to be deposited, the desired rate of deposition, etc., and the usual types of control instrumentalities may be employed to provide an electrostatic field of the desired characteristics.

The rate of deposition or application may be so controlled as to produce a coated product of any desired density by varying the quantity of particles supplied, the rate of travel of the base member through the field, and/or the electrical characteristics of the field, i. e., the flux density,

voltage across the electrodes, etc. To this end suitable means may be employed to control the rate of delivery of the particles and the rate of travel of the base member, and appropriate devices such as rheostats and various types of impedances, together with the usual indicators (ammeters, voltmeters, etc.), may be connected in the electrical circuits or circuit to provide for the adjustment necessary to obtain an electrostatic field suitable for the application or deposition of the particular type of material to be applied.

Where high potentials are employed or where the adhesive surface of the sheet material or base member contains an inflammable solvent, it is necessary to prevent "sparking" and suitable means may be employed to discharge or neutralize the static charge on the surface of the coated sheet before winding. To this end an ultra-violet light may be employed or, if desired, the coated sheet may be passed between electrodes connected to a high potential alternating current circuit, either of which is effective to discharge or neutralize any static charge carried by the coated sheet.

In the drawings:

Fig. 1 is a diagrammatic side elevation, in section, showing one embodiment of my apparatus;

Fig. 2 is a diagrammatic plan view of the apparatus shown in Fig. 1, the means for feeding the particles to be applied being omitted;

Fig. 3 is a diagrammatic side elevation, in section, showing a modified form of apparatus;

Fig. 4 is a section on line 4—4 of Fig. 3;

Fig. 5 is a schematic diagram illustrating one arrangement of the electrical connections;

Fig. 6 is a graphic representation of a pulsating current used in connection with certain forms of the apparatus herein shown;

Figs. 7 to 9, inclusive, are schematic diagrams illustrating other arrangements of the electrical connections;

Fig. 10 is a schematic diagram showing the electrical connections of a Kenotron transformer;

Fig. 11 is a fragmentary7 section showing a piece of fabric before the application of an adhesive coating;

Fig. 12 is a fragmentary section showing the fabric after the application of the adhesive coating;

Figs. 13 to 16, inclusive, are enlarged fragmentary7 sections showing different specimens of sheet material after being coated in accordance with the present invention;

Fig. 17 is a horizontal view with parts shown in section of another modified form of apparatus;

Fig. 18 is a plan view of the apparatus shown in Fig. 17; and

Figs. 19 and 20 are horizontal views, with parts shown in section of further modified forms of apparatus.

The embodiment shown in Figs. 1 and 2 comprises a coating apparatus 10, a deposition apparatus designated by the numeral 11, and a winding mechanism 12. The coating apparatus may be of any type suitable for applying a coating of adhesive such as rubber cement, wax, glue, paraffin, or the like cementitious material to one or both surfaces of a base member or sheet material 8, and as here shown comprises a tank or trough 10 having guide rolls 16, 17, 20, 21 and 22 to conduct the sheet material through a fluid bath 23 of suitable adhesive, and squeeze rolls 24 and 25 to remove excess adhesive and distribute the coating uniformly over the surfaces of the sheet 8. The temperature and fluidity of the bath 23 may be controlled in any suitable manner as by steam coils 26. The winding apparatus 12 may be of any conventional form and is here shown as comprising a guide roll 18, a winding drum 14, and a reel 15, upon which the coated sheet material is wound. Suitable means (not shown) may be provided to regulate the speed of the winding drum 14 and thus control the rate of travel of the sheet material 8.

The deposition apparatus 11 comprises a box-like structure or housing preferably having upright or walls of suitable electrical non-conducting material which define the deposition zone or chamber 30, the top of which may be open as shown in Fig. 1. The end walls 31 and 32 are provided with vertically extending slots or openings 33 and 34, respectively, through which the sheet material 8 may be conducted into and out of the zone or chamber 30, and guide rolls 35, 36, 37 and 38 are provided to support the sheet 8 for movement along a predetermined path through the deposition zone or chamber 30.

Electrodes 40, 41, 42 and 43 are mounted in pairs, each electrode comprising an elongate metallic bar secured to a suitable support and having a series of pointed members or prongs secured thereto and arranged as shown in Fig. 2. The electrodes are arranged in pairs 40, 41 and 42, 43 and may be connected to any suitable source of potential as hereinafter described. The elements of each pair are disposed on opposite sides of the path of travel of the sheet 8 and are preferably inclined at an angle to its line of travel so as to provide an electrostatic field which extends diagonally across the path of movement of the sheet 8. The purpose of this inclined arrangement is to insure a more even coating when the communicated material is fed to the electrostatic field from the top.

Suitable means are provided to conduct the material to be deposited on the sheet 8 into the electrostatic fields set up between each pair of electrodes and to this end hoppers 50 and 51 may be arranged directly above electrodes 40, 41 and 42, 43, respectively. If it be desired to coat one side of the sheet 8 only, the hoppers may be arranged to discharge the coating material into a zone between the projecting electrode and surface of the sheet to which the material is to be applied. Where both sides of the sheet 8 are to be coated, the hoppers may be arranged to discharge the particles on both sides of the sheet 8, or, if desired, one hopper may be arranged to discharge the material on one side of the sheet and the other hopper on the opposite side, the particular arrangement depending upon the connections of the electrodes for the most effective results.

At some convenient location between the hoppers 50, 51 and the electrostatic fields, there may be provided means for imparting an electrostatic charge to the particles to be applied and to this end metallic screens 52 and 53, or the like, may be mounted beneath the discharge openings of the hoppers 50 and 51, as shown in Fig. 1, or, if desired, these screens may be integral with the hoppers. Each of the screens are connected to the negative electrode or to the negative terminal of a suitable source of potential so that the particles as they emerge from the screens have the same negative charge as that of the negative or projecting electrode. Suitable means (not shown) may be employed to control the rate of delivery of the particles from the hopper so that

[fol. 580]

the density of the coating applied to the sheet material may be varied as desired.

The embodiment shown in Figs. 3 and 4 is a preferred form of deposition apparatus and includes all the essential elements of the apparatus shown in the previously described embodiment. In this embodiment the side and end walls of the deposition chamber have been dispensed with and uprights 46 are provided to support an insulating top plate 47 on which the hoppers 56 and 61 and the screens 62 and 63 are mounted. The electrodes 40, 41, 42 and 43 are supported on uprights 48 which are mounted on the base of the apparatus or they may be suspended from the top plate. Suitable means (not shown) may be provided to guide the sheet S between each pair of electrodes as in the previously described embodiment.

In Figs. 5 to 9, inclusive, are shown various ways in which the electrodes may be connected for use with a pulsating current (graphically represented in Fig. 5a) such as may be derived from a two-tube Kenotron rectifier, or a continuous (non-pulsating) current such as may be derived from a static machine, mechanical rectifier with a suitable condenser, a high voltage generator, or the like, the arrangement shown in Figs. 6 to 9 being particularly suitable for use with a pulsating current.

In the arrangement shown in Fig. 5, the electrodes 40 and 43 are connected to each other by a conductor 86 and by a conductor 90 to a suitable source of potential, here shown as a Kenotron rectifier designated generally by the numeral 89. The electrodes 41 and 42 are connected to each other by a conductor 87 and to the ground by a conductor 88. With this arrangement the conductors 86 and 90 are preferably connected to the negative terminal of the Kenotron 89 or other source of potential and its positive terminal may be grounded by means of conductor 88 or connected to the positive terminal of the source of potential, as desired. When thus connected the current flows from the Kenotron through a main circuit comprising the conductor 90, the ground and conductor 88, at which point the main circuit branches into two circuits, one of which comprises electrodes 42 and 43 and the conductor 86, the second branch circuit comprising the conductor 87 and electrodes 41 and 40. The conductor 86 connects the branch circuits to the negative terminal of the Kenotron and thus completes the main circuit from the Kenotron to the electrodes.

This arrangement is particularly suitable for use wher both sides of the sheet S are to be coated as it will be noted that the negative or projecting electrodes 40 and 43 are on opposite sides of the sheet S and the intensity of the electrostatic fields established between each pair of electrodes is always the same. When this arrangement is used in conjunction with the apparatus shown in Figs. 1 and 2, the screens 62 and 63 may be connected to the electrodes 40 and 43, respectively, so that the particles discharged into the electrostatic field are first given a negative charge. The hoppers 56 and 61 and the screens 62 and 63 are preferably positioned so that the charged particles are delivered into that portion of the electrostatic field between the projecting electrode and the adjacent surface of the sheet to be coated.

In the arrangement shown in Fig. 6 electrodes 40 and 42 are connected one to the negative terminal of the Kenotron and the other to the ground or to the positive terminal of the source of potential by conductors 86 and 88, respectively, and the electrodes 41 and 43 are connected to each other by a heavy metallic bar 85 which provides an appreciable capacitance in the circuit between the electrodes 41 and 43. These electrodes and the bar 85 constitute, in effect, a unit which acts as a condenser and which builds up its charge as the potential increases from zero to maximum and discharges through the electrodes 41 and 43 as the potential drops from maximum to zero (Fig. 5a). In place of the bar 85, the alternative arrangement shown in Fig. 7 may be used, in which case the electrodes 41 and 43 are connected to each other by a conductor 82 which is connected to one terminal of a condenser 83, the other terminal of the condenser being grounded. With either of these arrangements the flow of current through the circuit as the potential increases from zero to maximum is from electrode 42 to 43 and from electrode 41 to 40, the electrodes 41 and 43 being positively charged and electrodes 40 and 43 being negatively charged. When the potential reaches a maximum the electrodes 41 and 43 become fully charged so that when the potential drops from maximum to zero, there is a discharge from electrodes 41 and 43 through electrodes 40 and 42, respectively. Either of the arrangements shown in Figs. 5, 6 and 7 may be used with the apparatus shown in Figs. 1 to 4 in coating either or both sides of the sheet S.

The arrangement shown in Fig. 8 comprises a single pair of electrodes 40 and 41, the electrode 40 being connected to the Kenotron 89 by conductor 86, and the electrode 41 being connected to the ground or the conductor 90, as preferred, by a circuit which includes the condenser 83. This arrangement is particularly suitable where only one side of the sheet S is to be coated.

The arrangement shown in Fig. 9 is substantially the same as that shown in Fig. 7 except that instead of using two pairs of electrodes, four pairs, 40—40', 41—41', etc. arranged in tandem are employed. This arrangement is particularly suitable where a much denser coating of material is to be applied.

In Fig. 10 is shown a preferred form of electrical connections which affords an effective means of controlling the characteristics of the electrostatic field when an alternating current rectifier is used as a source of potential. The numerals 96 and 97 designate the alternating current power supply lines which are connected to the terminals of the primary windings 69 and 99 of a main transformer 70 and a filament transformer 71, respectively. Rheostats 72 and 73 are connected in the respective circuits so as to control their outputs. One terminal of the secondary winding 74 of the main transformer 70 is grounded by means of the conductor 98 (see also Figs. 5 to 9) and the other terminal is connected to the filament circuit of the rectifier or Kenotron 89, a voltmeter 76 being connected across the terminals of the primary winding 99. The filament circuit of the rectifier or Kenotron 89 is connected to the secondary 78 of the filament transformer and a voltmeter 77 may be connected across the primary 99 in the manner shown. The output terminal of the rectifier 89 is connected to the load by the conductor 90, as shown in Figs. 5 to 10. With this arrangement, the output of the rectifier may be accurately controlled by adjusting the rheostats 72 and 73 and thus the electrostatic fields set up between the elec-

trodes may be varied so as to attain the desired strength, density, etc.

In using the apparatus shown in Figs. 1 to 4 to carry out the process, the sheet material S, such as a piece of fabric 70 (Fig. 11), is drawn from the supply roll 15, through the bath 23 where a coating 71 (Fig. 12) of adhesive such as glue, paraffin, rubber cement, wax or the like is applied to both surfaces. While the adhesive coating is still tacky the sheet is guided between each pair of electrodes, as indicated in Figs. 1 to 10. The rheostats 72 and 73 are adjusted to produce the desired potential across the electrodes and thus establish an electrostatic field of the desired strength and intensity. After having made these adjustments the material to be applied is fed from the hoppers 30 and 31 at a predetermined rate and after passing through the screens 32 and 33 where the individual particles receive a negative charge, they are then carried by gravity into the electrostatic field. When material such as flock, linters and the like fibers, as well as the various forms of abrasive material such as carborundum, pumice, tripoli, etc., constitute the coating material being applied, the individual particles upon entering the electrostatic field, due to their elongate nature, become aligned in the direction of the electrostatic lines of force and are uniformly projected or bombarded against the adhesive surface of the sheet S so that their ends are deeply and firmly embedded in the adhesive coating at substantially the same angle and their projecting portions are disposed in substantial parallelism relative to each other. Due to the initial charge imparted to the particles, they tend to repel each other and become dispersed so that upon being projected against the adhesive surface of the sheet S the individual particles are spaced relatively to each other. As the individual particles align themselves with their major axes coinciding with the direction of the electrostatic lines of force, they may be applied to the sheet S so that their major axes are disposed at any desired angle relative to the surface of the sheet and consequently a greater number of particles per unit area may be applied to the sheet and with greater uniformity than is otherwise possible. When thus applied, their embedded ends are held in spaced relation to each other on the sheet S and by reason of capillary action and the removal of the film of air surrounding the particles the adhesive creeps up or rises along their sides forming a meniscus about the embedded ends of each individual particle.

After having received a coating of particles on one or both surfaces, sheet S is guided out of the deposition zone and passed between a pair of ultra-violet lights L and L' or other suitable means operative to discharge or neutralize the static charge carried by the coated surface without causing sparking. After removing the static charge on the sheet, it is then wound up on the reel 18. During both the coating and deposition operations the sheet S is held under slight tension by the "pull" of the winding drum and reel. The density of the coating may be varied, as desired, by varying either the rate of travel of the sheet S, the rate of delivery of the particles from the hoppers 30 and 31, or both, and the strength of the electrostatic field may be varied accordingly.

When applying fibrous material at a relatively low rate, a potential of the order of 15,000 to 20,000 volts may be used, although it is preferred to use potentials from 100,000 to 200,000 volts, particularly where heavier particles are being applied or where the rate of application is to be greatly increased, the particular voltage depending upon the character of the particles, the rate of travel of the sheet, and various other operating conditions.

In Figs. 17 to 20 are shown different modified forms of deposition apparatus particularly suitable for the application of flock, linters, asbestos fiber, wood pulp fibers, fine abrasives and the like materials, to an adhesive coated surface of a base member. In the embodiment shown in Figs. 17 and 18 the sheet material S is drawn from the supply roll 80 over a spreader roll 81 provided with a spreader blade 82 which is operative to distribute a fluid or plastic adhesive 83, such as rubber cement or the like, uniformly over the surface of the sheet S. After having received a coating of adhesive of suitable thickness, the sheet is drawn over or about a guide member which constitutes a part of the deposition apparatus. Thereafter the sheet is drawn downwardly between a pair of discharging electrodes 84, 84 connected to a suitable source of high potential operating current, then over a guide roll 85 and wound on a reel 87, as in the previously described embodiments.

The guide member preferably comprises a plate electrode 86 interposed between two sheets of electrical nonconducting material such as Bakelite, the upper sheet or layer 88 having a smooth surface and being provided with a rounded or beveled edge as shown in Fig. 17. The negative electrode 89 is disposed opposite the end of the electrode 86 and is arranged so as to establish a field whose lines of force intersect the path of travel of the sheet S at any desired angle. Preferably the length of each electrode is sufficient to provide an electrostatic field having a width corresponding to that of the sheet S.

A supply hopper 91 is disposed above the electrostatic field and is constructed and arranged to deliver the fibrous material onto a screen 92 or the like device interposed between the field and the hopper. The electrical connections are shown schematically in Fig. 17 wherein a conductor 95 connects the screen 92 and the electrode 89 to the negative terminal of a suitable source of potential designated by the numeral 96, the positive terminal being grounded by a conductor 97 or connected to the electrode 86, as desired. The electrode 86 may be grounded by a conductor 98 or otherwise connected to the conductor 97, and suitable means such as a controller 99 and rheostat 100 may be provided to control the potential and flow of current in the circuit. If desired, a voltmeter 101 may be connected in the circuit in the usual manner. The electrodes 84, 84 when connected as shown in Fig. 17, establish an alternating electrostatic field across the path of the coated sheet and are thus effective to discharge or neutralize any static charge carried by the sheet. The operation of the apparatus is substantially the same as that of the previously described embodiments, it being understood that the present arrangement is designed to coat only one surface of the sheet S at one time.

In the embodiment shown in Fig. 19, the granulitious material is applied to the sheet S in the same manner as in the embodiment shown in Figs. 17 and 18. In place of the guide member and plate electrode shown in Figs. 17 and 18, a roller electrode 105 is used. The roller electrode

[fol. 582]

provides a guide roll about which the sheet 8 is drawn on its way to the winding drum or reel (not shown) and may be connected to the ground or otherwise, as in the previously described embodiments. The negative electrode 107 comprises a metallic screen member which is shaped to provide a substantially horizontal portion 108 through which the particles discharged from the hopper 109 may pass, and a depending portion 110 disposed opposite but parallel to the roller electrode 106. The supply hopper 109 is disposed above the horizontal portion 108 of the negative electrode so as to discharge the particles onto its horizontal portion. The negative electrode is connected to the negative terminal of the source of potential and the usual control devices may be provided as in the previously described embodiment.

The embodiment shown in Fig. 20 is somewhat similar to that shown in Figs. 17 and 19 but is particularly designed for use in applying particles to a sheet having an adhesive coating which comprises a thermoplastic cementitious material, such as wax, paraffin, etc., which must be maintained in a relatively fluid or tacky condition during the deposition operation in order that the ends of the particles may be firmly embedded therein. The apparatus embodies all the essential elements shown in Figs. 17 to 19 but in place of the electrodes shown therein, a metallic block 114 and rotor 115 are used. The block 114 constitutes the positive electrode and preferably comprises a metallic casting having a series of longitudinally extending ducts or channels 116 which may be connected to a steam or hot water supply (not shown). The outer walls of the block 114 which contact with the sheet material are smooth and the adjacent corner is preferably rounded or beveled to provide a suitable guiding surface over which the sheet 8 is drawn. The rotor 115 constitutes the negative or projecting electrode and preferably comprises a cylindrical screen or grating supported on a circular plate which is rotatably mounted on a stationary tubular shaft 117. The tubular shaft 117 is provided with a radially disposed axially extending slot co-extensive with the longitudinal extent of the screen and facing away from the electrode 114. A conduit 119 having an elongate, horizontally extending, flaring mouth or entrance 120 disposed in radial alignment with the slot 118, is disposed closely adjacent to the electrode 115, as shown, and may be connected to a suitable suction fan or the like (not shown). A supply hopper 109 and a charging screen 111 are provided as in the embodiment shown in Fig. 17 and similar electrical connections, controls and means for discharging the static charge from the coated sheet may be employed. During the deposition operation the electrode 115 is continuously rotated, compressed air being introduced into the shaft 117 and discharged through the slot 118, and the electrode 114 is maintained at a predetermined temperature by the flow of steam or hot water through the ducts 116. The force of the air striking against the screen or grating of the electrode 115 is sufficient to remove any accumulations of oriented fibrous material or other particles and carry them into the conduit 120, thus keeping the negative or projecting electrode relatively free of oriented material.

In Figs. 13 to 16, inclusive, are shown different types of coated sheet material produced in accordance with the present invention. The products shown in Figs. 13 and 14 each comprise a base member or backing sheet 121, such as a sheet of heavy paper, a layer 122 of glue or the like binder, and a coating of abrasive particles 123 which have their ends deeply embedded in the binder 122. It will be noted that the individual particles are more or less elongate in character and are disposed with their major axes substantially at right angles to the surface of the backing sheet, and that their free ends, being disposed in substantial parallelism relative to each other, present a most effective cutting or abrading surface.

The product shown in Fig. 15 comprises a backing sheet 126, such as a sheet of fabric, a layer 126 of rubber cement or the like soft or flexible binder, and a coating 127 of fibrous material such as cotton flock or linters. It will be noted that the ends of the individual fibers are deeply embedded in the cementitious layer 126 and are disposed in uniformly spaced relation with their body portions extending outwardly in substantial parallelism, thus presenting an appearance which simulates that of a pile fabric.

The embodiment shown in Fig. 16 is similar to that shown in Fig. 15 except that the backing sheet consists of a sheet of heavy paper 128 and the fibers of the coating 127 are disposed at an angle of 45° to 90° relative to the backing sheet 128, thus presenting an appearance resembling suede.

The products shown in Figs. 15 and 16 are greatly superior to those made in accordance with the prior practices wherein the fibrous material is deposited on an adhesive surface of a backing sheet by means of a current of air or by gravity. In such products the individual fibers are heterogeneously disposed on the surface of the adhesive and hence do not assume any definite position relative to each other. Consequently, such products do not possess the dense and uniform characteristics nor the attractive appearance or finish of those made in accordance with the present invention. Moreover, the wearing qualities of such products are greatly inferior to those made in accordance with the present invention due to the fact that the individual particles are not embedded to a sufficient extent, if at all, in the adhesive, and as the body portions and the ends of the individual fibers provide the surface of the product, the individual fibers are soon worn away or are easily dislodged from the adhesive and hence expose uncoated areas of the binder. In the products made in accordance with the present invention the individual fibers, being firmly embedded in the adhesive, are not easily dislodged and as their ends constitute the major portion of the surface of the product, they effectively resist wearing. Furthermore, due to the fact that a much denser coating may be applied to the adhesive surface of the backing sheet, there is a greater number of fibers per unit area to resist wearing and abrasion, and consequently the product will outwear those made in accordance with the prior practices.

While there are shown and described different desirable embodiments of the present invention, it is to be understood that this disclosure is for the purpose of illustration only and that various changes and modifications may be made without departing fpom the spirit and scope of the invention as set forth in the appended claims.

What is claimed is:

1. In the process of coating a surface with solid particles wherein said particles are to be adhesively united to said surface, and which

complish forming an electrostatic field between a projecting and receiving electrode, the steps which include positioning an adhesively coated surface in said field, imparting an electrostatic charge of the same polarity as that of the projecting electrode to substantially all of the particles to be coated before they enter said field and then introducing the particles thus charged into said field in a position to be impelled, oriented and deposited by said field upon said adhesive surface.

2. The process of claim 1 in which the charge that is imparted to the particles before introducing them into said field is imparted by contacting the particles with an electrically charged body outside of said field.

3. The process of claim 1 in which the charge that is imparted to the particles before introducing them into said field is imparted by contacting the particles with an electrically charged body outside of said field, said charge being of a potential at least as great as that of the projecting electrode of said field.

4. In the process of coating a surface with finely divided particles of solid matter wherein said particles are to be held to said surface by firmly embedding at least a part of each particle in a coating of adhesive thereon, and wherein the particles are brought into contact with and positioned on the surface by means of the projecting, orienting and depositing effect of an electrostatic field formed between a projecting and receiving electrode, and in which the field above would charge the majority of the particles otherwise than by contact with any of the field electrodes, the steps comprising substantially separating and charging substantially all of the particles by contacting them with an electrically charged body having the same polarity and of a potential at least as great as the potential of the projecting electrode of said field before introducing them into said field, positioning the adhesive coated surface in the field and then introducing the thus charged particles into the field between the adhesive coated surface and the projecting electrode thereby insuring substantially uniform behavior of substantially all the particles that enter the field throughout the coating process and insuring that the maximum projecting, orienting and depositing power of the field is exerted on substantially every particle whereby a product coated with solid particles which are adhesively united thereto is secured, in which the particles are uniformly oriented, disposed and positioned, and firmly retained in the adhesive.

5. Apparatus for applying coating particles to a base member having a surface previously rendered adhesive, comprising a pair of spaced electrodes cooperating to form a projecting and receiving electrode assembly, means for charging said electrodes with opposite electrostatic charges thereby to produce an electrostatic field, means for supporting said base member with said adhesive surface between said electrodes, means positioned outside of the effective field between said electrodes, for imparting an electrostatic charge to substantially all of a dispersion of coating material in particle form to be applied to said base member and of a polarity corresponding to the polarity of a projecting electrode of the said assembly, said last mentioned means being positioned to conduct the charged coating particles into the said electrostatic field between the spaced electrodes intermediate the adhesive coating of said base member and the adjacent projecting electrode.

6. Apparatus for applying coating particles to a base member having a surface previously rendered adhesive, comprising a pair of spaced electrodes cooperating to form a projecting and receiving electrode assembly, means for charging said electrodes with opposite electrostatic charges thereby to produce an electrostatic field, means for supporting said base member with said adhesive surface between said electrodes, means positioned outside of the effective field between said electrodes, for imparting an electrostatic charge to substantially all of a dispersion of coating material in particle form to be applied to said base member and of a polarity corresponding to the polarity of a projecting electrode of the said assembly, and means for conducting the charged coating particles into the said electrostatic field between the spaced electrodes intermediate the adhesive coating of said base member and the adjacent projecting electrode.

GRANITE TRUST COMPANY,
IRVING L. SHAW,
Vice President,
Executor of the Last Will and Testament of James S. Bangar, deceased.

CERTIFICATE OF CORRECTION.

Patent No. 2,287,857. June 30, 1942.

JAMES S. BANGS, DECEASED, BY GRANITE TRUST COMPANY, EXECUTOR.

It is hereby certified that error appears in the above numbered patent requiring correction as follows: In the heading to the printed specification, line 9, for "Substituted for abandoned application" read --Continuation of application--; and that the said Letters Patent should be read with this correction therein that the same may conform to the record of the case in the Patent Office.

Signed and sealed this 29th day of September, A. D. 1942.

(Seal)

Henry Van Arsdale,
Acting Commissioner of Patents.

[fol. 584]

May 4, 1943. R. P. CARLTON 2,318,570

MANUFACTURE OF ABRASIVES

Filed Jan. 20, 1930 5 Sheets-Sheet 1

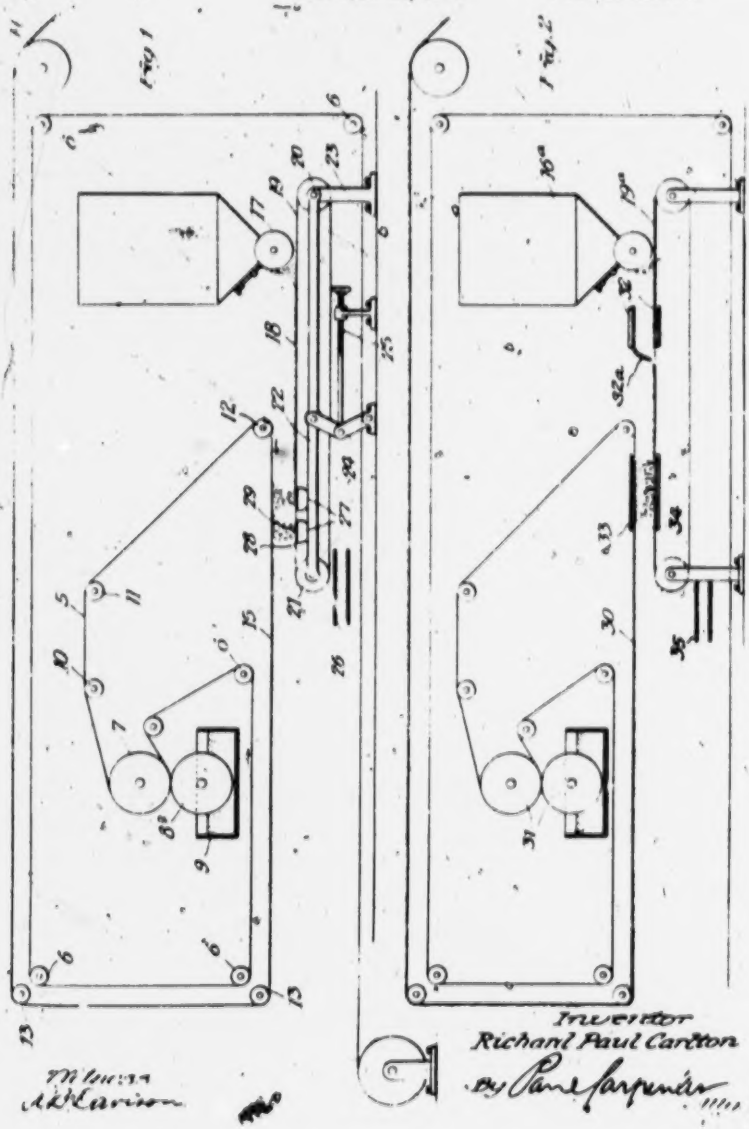

Inventor
Richard Paul Carlton
By Paul Carpenter
Attorney

[fol. 585]

May 4, 1943. R. P. CARLTON 2,318,570

MANUFACTURE OF ABRASIVES

Filed Jan. 20, 1930 5 Sheets-Sheet 2

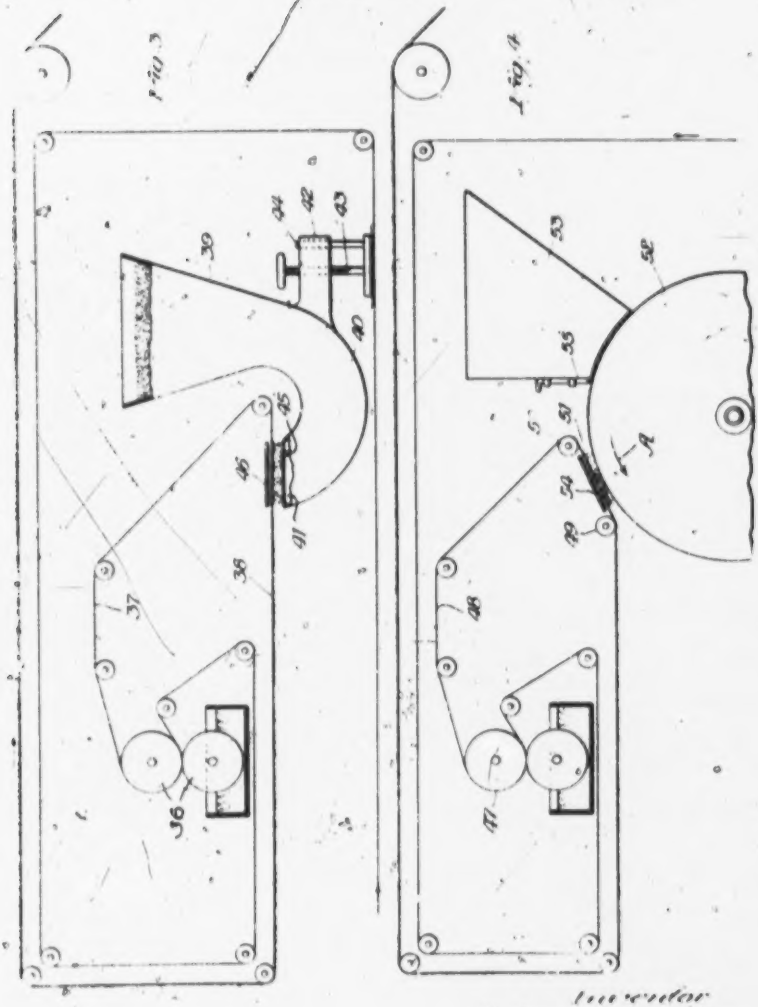

Witness
A. B. Earlson

Inventor
Richard Paul Carlton
By Paul Carpenter Atty

[fol. 586]

May 4, 1943. R. P. CARLTON 2,318,570

MANUFACTURE OF ABRASIVES

Filed Jan. 20, 1930 5 Sheets-Sheet 3

Fig 5

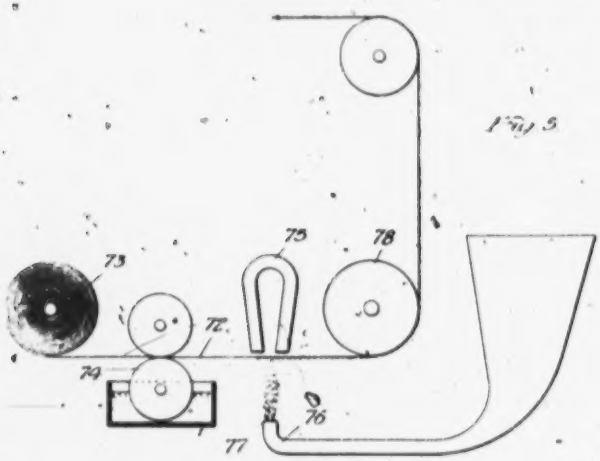

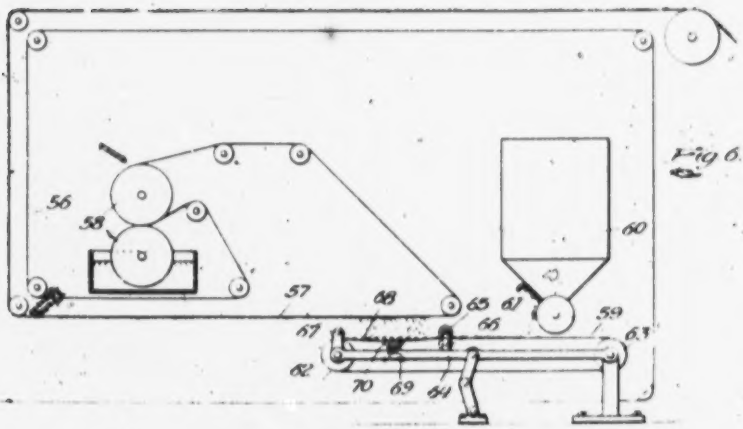

Fig 6.

Fig 7.

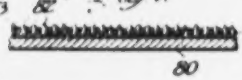

Witness
A B Davison

Inventor
Richard Paul Carlton
by Rue Carpenter Atty

[fol. 587]

May 4, 1943. R. P. CARLTON 2,318,570

MANUFACTURE OF ABRASIVES

Filed Jan. 20, 1930 5 Sheets-Sheet 4

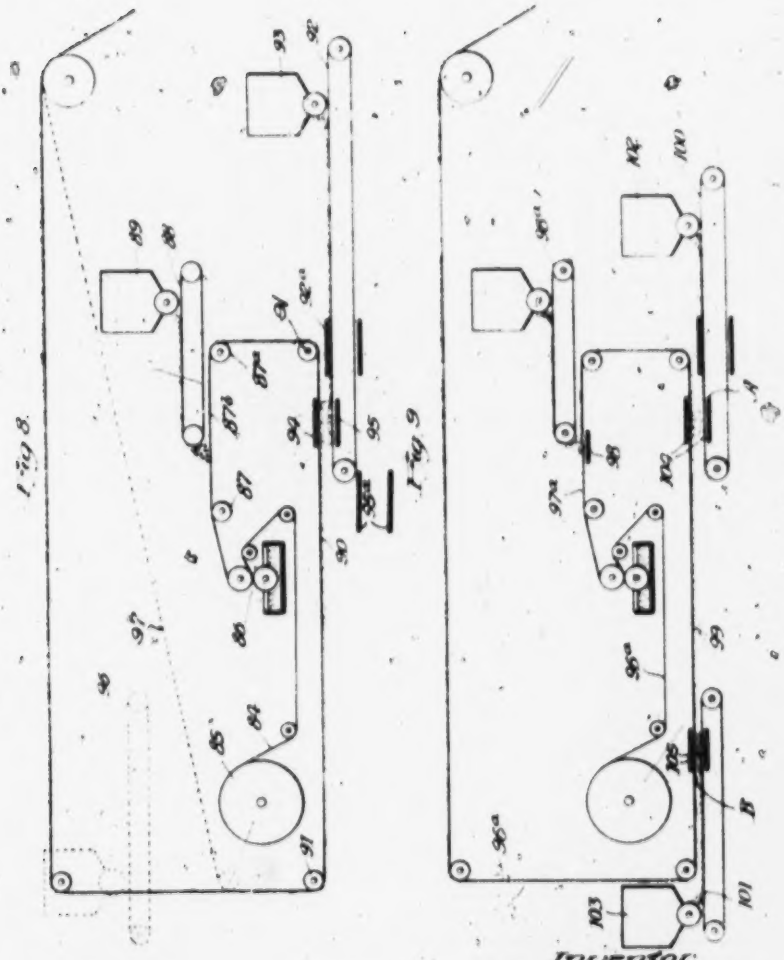

Witness
R.B. Davison

Inventor
Richard Paul Carlton
By Rene Carpenter
Att.

[fol. 588]

May 4, 1943. R. P. CARLTON 2,318,570

MANUFACTURE OF ABRASIVES

Filed Jan. 20, 1930 5 Sheets-Sheet 5

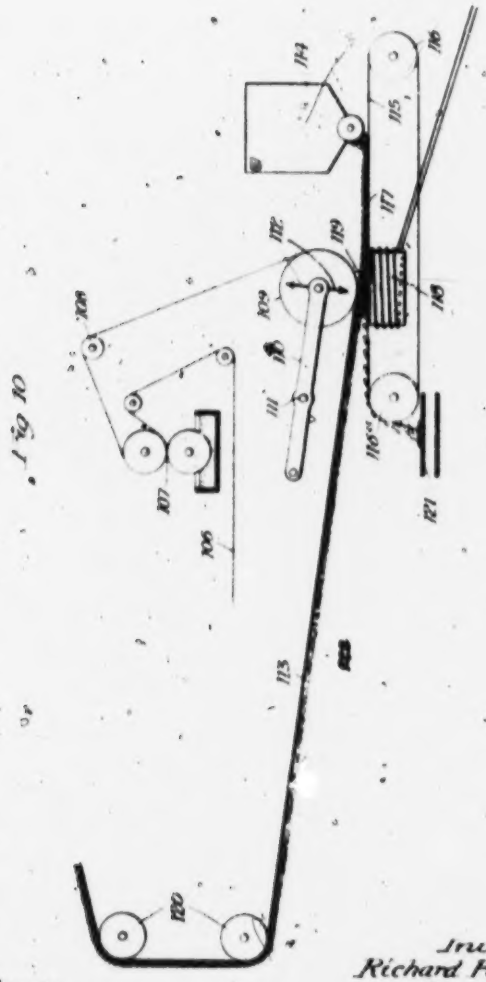

Witness
R. Davison

Inventor
Richard Paul Carlton
By Paul Carpenter
Atty

Patented May 4, 1943 2,318,570

UNITED STATES PATENT OFFICE

2,318,570

MANUFACTURE OF ABRASIVES

Richard Paul Carlton, St. Paul, Minn., assignor to Minnesota Mining & Manufacturing Company, St. Paul, Minn., a corporation of Delaware

Application January 29, 1936, Serial No. 62,865

62 Claims. (Cl. 117—17)

This invention relates in general to coated articles and to the art of coating, and more particularly to an improved method of and apparatus for applying pulverulent coatings to suitably adhesively coated surfaces, and while the invention finds particular utility in the art of making flexible abrasives, and is, therefore, described and illustrated for this purpose, it finds a wide field of utility for analogous purposes.

It is well known that in the art of making sandpaper, emery paper or cloth and similar abrasive articles, a flexible, or in some cases, a rigid, backing of paper, cloth, wood or the like is employed, to which is applied a coating of an adhesive substance, such as animal or vegetable glue, or where a waterproof article is desired, the backing may be coated with any of the now well known waterproof adhesives of the Okie Patents 1,949,827, 1,949,828, of Dec. 8, 1933, or 1,981,697 of April 20, 1934, for this purpose, and while the coating is still wet or unset, a suitable abrasive material such as garnet, corundum, sand or the like is applied thereto. The grains of abrasive substances are usually applied by gravity upon the upper adhesive coated surface of the backing and they lie in the adhesive material in haphazard fashion due to the elongated nature of the abrasive particles, and in a large degree, the facets or cutting edges of the individual grains or grits often lie flat upon or are embedded in the adhesive coating in such a manner that in some instances their best cutting edges never come into contact with the work or at best are brought inefficiently into contact therewith. The invention here has as one of its objects to measurably increase the number of grits whose longer or greater dimensions are in a plane perpendicular to the surface of the backing, thereby to present more efficiently the cutting edges to the work, and increase the cutting ability and life of the abrasive article.

It will be understood that in ordinarily depositing mineral, that is, pulverulent abrasive material solely under the force of gravity onto a backing, it acquires a velocity due to the action of gravity. As the grits pass through the intervening air space, there will be caused some change in their positions enroute to the sheet or backing but ordinarily neither the velocity given to the grits or the effect of the air on them is sufficient to cause them to become aligned so as to assume positions substantially perpendicular to the backing. It is, therefore, necessary that independent force be applied to the grits and I have found that by passing the grits through a static field of electric energy or of electro-magnetic energy or by mechanically imparting this force to the grits a much greater number of the individual particles will assume erect positions on the backing which will enhance its cutting ability. As will later appear, my invention, in its several forms, is capable of application for operation in conjunction with gravity methods of applying the grit, inasmuch as under certain conditions, and for some purposes, it is desirable to employ both gravity and one of the forms of my invention in conjunction in order to attain a desired form of abrasive article.

In carrying out this invention, I find it desirable to employ a conveyor for conducting the mineral at rest relative to the conveyor by relatively slow speed to a point adjacent to which the independent force is applied for projecting the particles of grit onto the backing. I find that by then applying this independent force, be it mechanical or electrostatic or electromagnetic, I am able to impart a high velocity to the particle so that any force of gravity acting on the particle, whether in the same direction, in a counter direction, or in a direction angularly to that at which the force is applied, will be relatively small compared to this force applied. It is possible with the present invention to apply the force directly counter to gravity, that is, by bringing the grits beneath the backing or by applying the force in some other direction as long as the force of gravity and the effect of air is reduced below a point which will interfere with the result desired, namely, the projection of the grits with their longitudinal dimensions ultimately perpendicular or substantially so with respect to the backing.

The principal objects and advantages of this invention reside in the provision of an improved abrasive coated article, such, for example, as sandpaper, emery cloth, or the like, wherein the abrasive grits or grains lie in position on the backing for increasing the cutting effect and durability of the abrasive article; the provision of an improved abrasive article wherein the abrasive grits are disposed so that their cutting facets are presented in position to more efficiently engage the work and thereby produce a sharper article; the provision of an improved abrasive article wherein the abrasive grains or grits are applied thereto with their longer or greater dimension substantially perpendicular to the plane of the backing; the provision of an

improved abrasive article which may be flexible or rigid, as desired, and which may or may not be made waterproof, that is, suitable for employment in a water abrading operation.

This invention further includes as objects and advantages thereof, the provision of an improved method of an apparatus for manufacturing abrasive articles; the provision of an improved method of and apparatus for applying pulverulent material to one surface of a backing irrespective of the force of gravity, that is, against the normal tendency of the force of gravity; the provision of an improved method of and apparatus for propelling a pulverulent material, such as a grit or an abrasive grain, against an adhesive coated surface; the provision of an improved method of and apparatus for the purpose set forth and including electrically operated means for acting on an abrasive grain or pulverulent material and causing it to advance onto the adhesive coated backing irrespective of the force of gravity; the provision of an improved method of and apparatus for causing the particles of pulverulent material to impinge upon and assume a position in the adhesive coated surface substantially normal or perpendicular to the surface of the backing; the provision of an improved method of and apparatus for propelling a pulverulent material onto a moving sheet in a direction transversely to the plane of movement thereof and in a direction substantially counter to gravity; the provision of an improved method of and apparatus for making abrasive articles, such as sandpaper and the like, which includes the application of a grit to the under side of the backing; the provision of an improved apparatus which includes means for feeding and applying a pulverulent material counter to the force of gravity and simultaneously with movement of the backing; the provision of an improved means for moving a web of paper and applying an adhesive thereto and including means arranged below and for operating synchronously with for applying a pulverulent material to the under side of said moving backing; and the provision of an apparatus of the character described wherein improved electrostatic or electromagnetic means may be employed, acting on the abrasive material and causing it to move at an accelerated speed toward the sheet so as to cause it to impinge thereon in the adhesive coating and thereby present the cutting edges of the abrasive grits away from the surface of the backing and thus increase the cutting ability and life of the abrasive article.

I have also found my invention useful as a modifying step in the employment of the conventional gravity process for applying grit in the manufacture of sandpaper or other abrasive and, therefore, additional objects of this invention reside in the provision of an improved method of interposing an additional step which will apply abrasive grains either before or after the application of grits by gravity in the usual manner, it being understood that the step of applying grit irrespective of gravity by an electromagnetic or electrostatic means may be employed somewhere in the process of manufacture, the essential purpose being to increase the number of grits whose cutting facets are presented away from the backing and thereby to enhance the cutting ability of the finished article.

The apparatus of this invention includes a number of alternative forms for mechanically or electrically carrying out the steps of the process and to this end is provided an improved pneumatic means and improved vibrator structure for mechanically propelling the pulverulent material and improved electromagnetic structure for acting on the mineral and causing it to move in a cloud toward the adhesive coated surface of the moving web or backing.

The foregoing and such other objects and advantages as may appear or be pointed out as this description proceeds are attained in the structures illustrated in the accompanying drawings in which:

Figure 1 is a schematic view illustrating one form of apparatus for carrying out the process of this invention;

Figure 2 is a view similar to Figure 1 of an alternative form of the invention;

Figures 3, 4 and 5 are further alternative forms of the invention which include the electrical feature;

Figure 6 is a further alternative form of the apparatus of this invention of employing mechanical vibrating means;

Figure 7 is an enlarged schematic view illustrating a portion of an abrasive article made in accordance with this invention;

Figures 8 and 9 are additional alternative forms of apparatus for carrying out further steps of the process of this invention;

And Figure 10 is a further alternative form of apparatus for carrying out one of the methods of this invention.

The method of the present invention includes as steps thereof the feeding of a web or strip of paper or other fabric at a predetermined rate of speed, applying an adhesive substance to the under side of the sheet, or applying the adhesive coating to one side and then moving the sheet with the coated side out, and simultaneously with the movement of the coated sheet, causing a grit or abrasive material to be applied to this side. The sheet or web of paper may be moved so that the adhesive coated side is either presented downwardly or at any angle thereto. The movement of the abrasive grains onto the under side of the backing is done irrespective of the force of gravity and, in fact, directly counter to gravity, and preferably done by imparting relatively high velocity to the abrasive material, thus causing it to impinge upon the adhesive coating. In view of the fact that the abrasive grains are projected through an intervening space from a suitable carrier onto the adhesive coated side irrespective of or counter to the force of gravity, the grains, which are usually somewhat elongated, will assume a position in transit so that the longer dimension thereof will take a position normal to the surface of the backing, thus causing the grains to "stand" on the surface rather than lie flat in greater percentage than when they are deposited by gravity. It is to be understood that this movement of the grains and deposition of them on the coated surface may be carried out in a number of ways, either by vibration, by an air blast, or by electrostatic or electromagnetic means.

In the alternative forms of this invention later to be described, the method involved includes combining a gravity deposition of mineral on the adhesively coated moving backing with the step of applying the grits irrespective of gravity, this being particularly useful in some of the heavier grits wherein it may be found that the force susceptible of application by an electrostatic or an electromagnetic means is not sufficiently active on

the available area of the individual grits to cause an entirely satisfactory result or to move enough of the grits onto the sheet to attain the desired end. In this invention it may be required to apply some of the grit by gravity and later apply some of the grit by one of the methods of this invention or vice versa, but, in any event, the number of grits in the entire finished article which stand erect on the backing will be measurably increased over the ordinary methods heretofore employed for depositing grit on a backing for forming an abrasive article.

This invention produces a very satisfactory piece of sandpaper in which the cutting ability is measurably increased and by the deposition of the grains of sand or grit irrespective of the force of gravity, it is possible to produce an orientation of the mineral as desired and to control the thickness of the abrasive coating much more readily than where gravity alone is relied upon or employed for depositing the grains on the sheet.

The apparatus of this invention may take any one of the forms shown in the drawings and in the form of the invention shown in Figure 1, air pressure is resorted to for producing the mineral cloud and for projecting the mineral onto the moving web.

Referring now more particularly to Figure 1, the flexible backing 6 of paper or cloth or other fabric is trained or fed over a series of rollers 6, 6, and over one of a pair of the squeeze rollers, indicated at 7, the other roller 8 of said pair being in contact with an adhesive material contained in a tray or tank 9 by which an adhesive coating is applied to one side of the moving web. After receiving the adhesive coating, the web 6 is trained over rollers 10 and 11 and is brought back over a roller 12 so that the adhesive coated surface of said web is presented downwardly. The web may then be trained over rollers 13, 13, and fed to a suction drum 14, whence it passes into festoons for drying.

The mineral is supplied from a hopper 16 and a conventional outlet 17 which feeds a layer 18 of mineral to a moving conveyor 19. This conveyor 19 is preferably porous and passes over the feeding rollers 20 and 21 and is adapted to move at a suitable rate of speed to supply a sufficient quantity of abrasive grain. In some cases, it has been found advantageous to move the conveyor at a speed substantially the same rate of speed as the web 18, although these speeds are, of course, variables. The rollers 20 and 21 are mounted in the ends of a suitable frame 22 and this frame may be raised and lowered so as to vary the distance between mineral conveyor 19 and the moving web 18. This frame 22 may be supported fixedly at one end, as indicated at 23, and the other end may be raised and lowered by a toggle arrangement 24 activated by a threaded rod 25. Below the conveyor 19 and at the movable end thereof, that is, adjacent to the web 18, there is provided a second conveyor 26 which serves to conduct away excess mineral which flows over the end of the conveyor 19 and which may be returned in any suitable manner to the mineral hopper.

Below the upper flight of the conveyor 19, there are provided two air troughs 27. These air troughs are provided with flat upper walls 28, having slots 29 therein, said slots extending across the width of conveyor 19 and the troughs themselves being connected to a suitable source of air under pressure.

These troughs form in effect elongated jets or nozzles and when so placed below the conveyor belt or frame 22, a small quantity of air is emitted at high velocity which passes through the porous belt or conveyor.

It will be understood that when a blast or blasts of air are delivered from the troughs 27, this blast of air passes through the porous conveyor 19 and blows the mineral from the conveyor against the under side of the flight 18 so that the mineral is caused to strike into the adhesive at a relatively high velocity and become impinged therein. Owing to the projecting of the mineral in this manner through the intervening air space, the individual particles of grit or abrasive material are caused to assume a position parallel to their trajectory, that is, with their longer dimension perpendicular to the surface of the flight 18. In view of the fact that most of the particles of mineral are somewhat elongated due to the manner of production of the same, they will naturally assume this position in movement from the conveyor 19 to the adhesive coated surface of the backing. As they arrive at the adhesive material, they impinge themselves thereon and will thus stand erect in the adhesive, thus forming a sharper contour for abrasive purposes. By varying the rate of speed of the moving backing relatively to the speed of the conveyor and by varying the distance between the conveyor and the backing and the velocity of the air stream, and by increasing or reducing the number of such jets and the quantity of adhesive applied, any reasonable desired thickness of grit layer may be produced during the process and without stopping the apparatus. It will be understood that the excess mineral carried by the conveyor may be dumped into the conveyor 26 and returned by any suitable means to the hopper 16.

Referring now to Figure 2, there is provided the same general arrangement of moving backing, having the flight 30 adhesively coated from the squeeze rollers 31.

Below the flight 30 there is provided a mineral feeding conveyor 19a, receiving pulverulent material from the hooper 16a.

The conveyor 19a is mounted for movement toward and away from the flight 30 similar to the conveyor 19 and, therefore, this structure has not been shown in Figure 2.

As the mineral flows from the hopper 16A it does not always assume a smooth or even distribution on the conveyor 19A, and, therefore, it may be desirable to provide a pair of charged electrodes 32, one arranged above and one below the conveyor 19A, for the purpose of spreading the mineral evenly on the conveyor belt. The conveyor 19A in this instance may be non-porous.

When charged electrodes are put in this position they act in principle the same as the charged electrodes used for coating the mineral on the backing. An electrical charge or difference of potential is set up between the electrodes 32. The voltage or difference in potential between these electrodes is maintained great enough to produce a strong static field, but not so great as to break down the insulation between the plates, which insulation may be the dielectric strength of the air or the dielectric strength of the air plus the dielectric strength of any insulating material which may be used to wrap the electrodes.

As the mineral on the conveyor enters the static field between the plates the mineral particles take on the charge of the lower plate, and

[fol. 592]

are repelled to the upper plate where they lose their charge and take on the opposite charge of the upper plate. At this point they are repelled to the lower plate. Since new mineral is being conveyed by the conveyor into the field continuously the static fields soon become supersaturated with mineral particles, and an equilibrium is reached where as many particles are thrown out of the static field as are brought in by the conveyor. By having a down-turned end 32A of the upper electrode the mineral particles that are thrown out of the static field are deflected evenly on the conveyor belt so that a smooth coating of abrasive grit is first placed on the conveyor.

The use of a static field for getting a smooth coating of mineral on the conveyor belt is not necessary to the invention but is an additional means of obtaining evenly distributed abrasive coatings, and is also a means for avoiding the use of any excess mineral on the conveyor. When the mineral is evenly coated on the conveyor at the time it is being coated streaks, thin spots, etc., in the finished product are reduced.

At the same approximate point at which troughs 27 are provided in Figure 1 there are here provided electrically charged electrodes 33 and 34, the electrode 34 being located below the upper flight of the conveyor belt 19A and electrode 33 being disposed above the flight 38 of the backing. A sufficient difference of potential is maintained at electrodes 33 and 34 to produce a strong static field, similarly to that referred to above. This static field moves the mineral from the belt 19A to the underside, which is the adhesive coated surface of the flight 38.

As the mineral enters the static field between the electrodes 33 and 34 it becomes charged with the charge of the lower plate, and is here propelled to the upper plate 33.

It will be observed that in this method of coating the mineral is applied by a force other than gravity. In all other methods of coating sandpaper, known to me, the velocity of the particle is either in whole or part given to it by the force of gravity. In the case of this electrostatic coating the particles are oriented in the static field so that there is a tendency for the long dimension of the mineral to be perpendicular to the electrode plates, and also perpendicular to the web 38, which is being coated. The finished sandpaper product, therefore, contains a substantial percentage of the particles of mineral standing on end rather than laying flat, thereby increasing the cutting properties of the abrasive article.

Excess mineral is dumped onto the conveyor 38, whence it may be returned to the hopper 16a.

Referring now to the alternative form of the invention shown in Figure 3, there are provided the squeeze rollers 36 which apply adhesive to one surface of the moving paper web 37 and the adhesive coated surface thereof is presented downwardly in the flight 38.

In this instance there is provided a hopper 39, having a curved outlet spout 40 whose outlet 41 is presented below the moving web 38. The hopper may be provided with a bracket 42 whereby to receive a threaded member 43, said bracket engaging a guide post 44. In this manner, the hopper may be raised or lowered so as to vary the distance of the outlet 41 from the flight 38 of the backing. A suitable screen 45 may or may not be provided over the outlet so as to cause the distribution of the mineral contained in the hopper. In this instance, the mineral flows by gravity to the outlet 41, but does not pass from the outlet to the adhesive coated backing by gravity, but under the effect of the static charge established between the electrode 46 and the hopper or the screen 45 of said hopper.

The operation of the invention here is much like that of Figure 2, the screen 45 serving the purpose of distributing the mineral and at the same time preventing the large body of mineral in the hopper from forcing it against the coated surface of the backing.

Referring now to the form of the invention shown in Figure 4, there is provided the adhesive coating rollers 47, applying an adhesive coating to one surface of the moving web 48. This web 48 is trained over rollers 49 and 50 so that flight 51 thereof between said rollers is presented in a plane tangential to the surface of a conveyor drum 52 whose lineal velocity is sufficient to furnish the required amount of mineral. This drum is fed from a hopper 53 and forms one electrode of the electrostatic system. The other electrode is indicated at 54 and is disposed above the flight 51. As mineral issues from the gate 55 of the hopper, the drum rotating in the direction of the arrow A, the mineral is carried to a point adjacent to the flight 51 whereupon the electrostatic charge set up between the drum 52 and the electrode 54 will cause a projection of the mineral from the drum onto the coated surface of the flight 51.

Referring now to the alternative form of the invention shown in Figure 5, there is employed here electromagnetic means or a permanent magnet means for moving the grits toward the adhesively coated web. The adhesively coated web is shown at 12 and is fed from a roll 13 over an adhesive coating roller 14. The horizontal flight of the web 12 passes beneath magnet 15 which may be either an electromagnet upon which a variable voltage may be imposed or a permanent magnet.

Immediately below the magnet 15 and the flight 12 of the web, there is provided a source of supply for the mineral, that is, the abrasive material, indicated at 16. This source includes an outlet 17, and the distance between the outlet 17 and the moving web 12 may be varied as desired, or the intensity of the electromagnet, where one is employed, may be varied for changing the thickness of the abrasive coating. The web passes over an idler 18 whence it is fed to festoons not shown.

Referring now to the form of the invention shown in Figure 6, the moving web 56 is trained over a series of rollers similar to the arrangement shown in Figures 1 and 2 so that a horizontal flight 57 of the paper backing is provided, having an adhesive coating on the under side thereof. Squeeze rollers 58 engage the paper backing for applying an adhesive thereto.

In this form of the invention, a mechanical vibrating means is provided which serves to propel the mineral, that is, the grit, from the grit feeding conveyor 60, which latter receives mineral from the hopper 59, having a gate 61. The conveyor 60 is trained over rollers 62 and 63 mounted in a suitable frame 64, which latter may be mounted for adjustment toward and away from the flight 57 similarly to the conveyor 19 of Figure 1. The conveyor 60 extends below and is separated from the flight 57 of the paper web and travels at substantially the same speed as the paper web.

The conveyor 60 passes between sets of pinch

rollers, one above and one below the upper flight of the conveyor 50, as indicated by 55 and 56, and also beneath a pinch roller 57 which bears on the roller 52. The pinch rollers 55 and 56 tend to distribute the mineral evenly over the surface of the conveyor and are so spaced from the rollers 52 and 57 that the portion of the belt 58 between the rollers 55 and 56, and 52 and 57 is permitted to lie slack whereas the remaining part of the conveyor is substantially taut. This arrangement tends to limit the vibration of the conveyor belt to the zone of application of the mineral to the paper backing, as indicated at 58.

Beneath the portion 58 of the belt 59, there is provided a revolving batter 59 operating on a shaft carried in suitable bearings in the frame 64 and provided with a plurality of radial arms 76 which upon rotation rigidly strike the under side of the portion 58 of the belt, thus throwing or projecting the mineral content thereof against the under side of the adhesive coated paper backing, much in the manner in which the air stream blows the mineral or grit against the paper backing as shown in Figure 1. The batter 59 may be driven in any desired manner from a separate source of power or may be connected suitably with the rollers driving the belt 58, but geared to operate at a greater rate of speed. The rollers 55 and 56 and the roller 57 are separately driven from the belt 59 so as to produce the tautness in the belt, except the flight of the belt indicated at 58.

In Figure 7, there is illustrated an article made in accordance with the present invention. The backing is shown at 60 to which an adhesive coating 61 has been applied, and the grits, greatly enlarged, are indicated at 62 and it is noted that they stand on end in the adhesive coating, thus causing their sharper edges to project beyond the upper or outer surface of the coating, thereby enhancing the cutting ability and increasing the life of the abrasive article. While the article shown in Figure 7 is purely schematic, it will be understood that the mineral actually does take a position substantially normal to the backing and, while all of the grits may not take this position, a large number of the same do and the cutting qualities of the abrasive article are thus greatly increased. Furthermore, by so disposing the grits, it permits of the application of an additional sizing coat or coats to the back and to the front or cutting face of the abrasive material without completely burying the grits and as a thicker coat of adhesive may thus be employed on the cutting face of the abrasive material, the engagement of the adhesive material with the abrasive material is greatly enhanced, thus further tending to increase the life of the abrasive article. Such a sizing coat is indicated at 63.

As previously pointed out where the electrostatic or electromagnetic methods are resorted to in some of the coarser grades of abrasive devices made, it may be found that the electrostatic or magnetic field into which the particles are conducted may not exert on each individual particle sufficient force to cause proper orientation of the particles for the reason that the static effect is substantially proportional to the area of the particle and the coarser the particle, the smaller the area of effect per weight. Therefore, as larger grits or sizes of particles are employed, increased force is required to move the particle and for some purposes, insufficient increase in force results because of the reduced area per weight. Therefore, in such cases a form of the invention, as shown in Figure 8, may be resorted to wherein the mineral is applied to the adhesive coated backing in part by gravity and in part by electrostatic or electromagnetic means.

In view of the fact that the electrostatic and electromagnetic means may for some purposes be alternatively employed, I have illustrated in Figure 8 merely the electrostatic elements though it will be understood that the electromagnetic means of Figure 5 may be employed in the same manner.

Referring in detail to Figure 8, I have illustrated a web of paper 84 coming off a roll 85 and passing through an adhesive coating device illustrated in general at 86. The web 84 is thence trained over rollers 87, 87a, so that it has a substantially horizontal flight 87b, which receives grits in the desired amount from an ordinary conveyor 88, said conveyor receiving grits from the hopper 89. The web of paper thence is carried downwardly to a horizontal flight 90 by the provision of rollers 91, 91 and adjacent one end of this flight, I provide the conveyor 92 receiving additional grits from the hopper 93, which may be adjustably mounted similar to the conveyors hereinabove described, said conveyor 92 passing beneath the flight 90 of the paper web. As the web passes over the rollers 87a and 91, a quantity of the mineral deposited from the conveyor 88 onto the web will drop off, and, for conveying away this excess mineral, I provide a transversely running conveyor 92a arranged between the flight 90 and the conveyor 92. Beneath the upper flight of the conveyor 92 and above the flight 90 of the web 84, I provide static electrodes 94 and 95, or may provide an electromagnet similar to that shown in Figure 5 which will cause grit coming from the hopper 93 to be applied counter to the force of gravity onto the under surface of the flight 90. A conveyor 96a may be employed for carrying off the excess mineral from the conveyor 92.

In the operation of this form of the invention, it will be understood that a desired proportion of mineral applied by gravity to that applied by force other than gravity may be determined by actual operation so that the desired quantity of the abrasive grits is properly applied to the paper web.

It may be necessary in some of the very coarse grains to additionally apply grit to the moving web and this may be done by providing an additional conveyor similar to that indicated at 92 and additional electrodes, or may be accomplished by additionally applying by gravity grit at the point indicated at 96, this arrangement being shown in dotted lines and the grits being applied to an upper flight 97 of the paper web just before it passes on to the festoons.

Figure 9 illustrates the alternative forms suggested in connection with Figure 8, that is, wherein electrostatic or electromagnetic means or any other means counter to gravity, is employed for applying the grits and in Figure 9 the paper web is indicated at 98a having a horizontal flight 97a disposed below a conveyor 88a. In this instance, the grits are deposited from the conveyor 88a by gravity and the orientation of the grits is assisted by a plate electrode 99. The paper web may then be carried in position so as to provide a horizontal flight 90 and an electrostatic or electromagnetic or other grit applying

[fol. 594]

means for applying grit counter to gravity may be employed at one or more points as indicated at A and B, wherein the conveyors 180 and 181 convey grit from suitable hoppers 182 and 183, and electrodes 184, 184, and 185, 185 serve to apply the grit.

Referring now in detail to Figure 10, there is further illustrated there an apparatus for applying the grit to the adhesively coated backing by an electromagnetic means. In this form of the invention a moving web is provided indicated at 186, this web being a flexible strip of paper which is suitably adhesively coated by a mechanism indicated generally at 187.

The moving web thus adhesively coated is carried over a roller 188, thence over a roller 189, said roller 189 being mounted on a shaft carried in a bearing arm or arms 110 pivotally mounted at 111, whereby the roller 189 may be raised and lowered in the substantially vertical plane of the arrows 112, thus permitting the lower flight 113 of the paper web to be elevated or depressed, as the case may be.

Mineral is deposited from a hopper 114 on to a conveyor 115 trained over rollers 116 and 116a, the upper flight 117 of said conveyor passing beneath the roller 189 and the moving web, and conveying mineral, that is, the grit, to a point adjacent to the roller 189.

Preferably immediately below the axis of the roller 189 and below the upper flight 117 of the conveyor 115 I provide an electromagnet 118 which is so mounted that its magnetic flux passes through the conveyor and causes the mineral particles to stand erect, as indicated at 119, as they move along with the upper flight of the conveyor. While the mineral particles are thus standing erect they come into contact with the adhesively coated side of the paper backing and are thus picked up by it and conveyed away, the backing being trained over rollers 120 and carried to the festoons similarly to the other forms of the invention. It will be observed that the angularity of the lower stretch 113 of the paper web is such that lies upwardly to the conveyor 115. In this way the particles of grit adhering to the paper are not knocked down by other particles remaining on the conveyor, it being understood that the grid is fed somewhat in excess of the required amount so that an adequate amount will be deposited on the adhesively coated side of the backing. The excess mineral drops off the conveyor 117 and is carried to a collecting means by a conveyor 121.

It will be understood that by varying the amount of mineral fed from the hopper, the strength of the electromagnet, that is, the strength of the flow current transferred, and the position of adjustment of the roller 189 the assembly may all be properly correlated for obtaining the desired grade of finished article.

It may be desirable that a certain amount of pressure be exerted on the erect particles of mineral so as to cause them to impinge upon the adhesively coated side of the paper and thus, by manipulation of the arms 110, an adjustment of the pressure of the roller 189 may be attained.

It will be understood that while the electrostatic and electromagnetic means for casting counter to gravity are illustrated in Figures 8 and 9, the mechanical means hereinabove described may be conveniently employed in these locations without departing from the spirit of the invention. However, the reason the electromagnetic and electrostatic elements are particularly shown here is that the difficulty of counter coating successfully with the coarser grains is more likely to arise with these elements than with the vibrator or air blast heretofore described.

I wish to point out that where the expressions "electromagnetic" and "electrostatic" are employed in the specification, I will refer to the employment as well of a permanent magnet or some other form of static charge or magnetic charge which will perform the function.

Having thus described my invention and illustrated its use, what I claim as new and desire to secure by Letters Patent is:

1. The method of coating a continuously moving backing with a pulverulent material which includes as one of its steps the propulsion of the pulverulent material from a preliminarily distributed layer thereof onto one surface of the backing in a direction resisting the normal force of gravity and arranging the pulverulent material on end.

2. The method of making an abrasive article having a backing and a grit layer which includes as steps thereof coating a backing with adhesive, and forcibly propelling a pulverulent abrasive substance to said adhesive coated surface from a preliminarily formed layer and against the normal force of gravity for causing the particles of abrasive to assume a position in the adhesive with the major dimensions thereof substantially normal to the plane of said backing.

3. The method of coating a backing with a pulverulent material which includes as steps thereof, feeding the backing at a substantially uniform rate of speed, supplying the pulverulent material to the zone of application in a substantially thinly distributed layer on a conveyor spaced from said backing, and propelling the pulverulent material from the conveyor through the intervening space onto one surface of the backing in a direction counter to the force of gravity.

4. The method of coating a backing with a pulverulent material which includes as steps thereof, feeding the backing at a substantially uniform rate of speed, in a substantially horizontal plane, feeding a pulverulent material below said backing in a substantially horizontal plane, and propelling the pulverulent material upwardly to cause the same to impinge upon one surface of said backing.

5. In an apparatus of the character described, in combination, means for supporting a backing, means for applying an adhesive thereto, means below and spaced from said backing for supplying a pulverulent material in a layer arranged substantially in parallelism to said backing, and means for applying said material to said backing including an air jet for propelling said material against said backing through the intervening space.

6. In an apparatus of the character described, in combination, means for supporting a backing, means for applying an adhesive thereto, means below and spaced from said backing for supplying a pulverulent electrically susceptible material, and means for creating an electrical field including electrically charged elements below said supplying means and above said backing for propelling said material onto the backing under the influence of said field.

7. In an apparatus of the character described, in combination, means for supporting a backing, means for applying an adhesive thereto, means below and spaced from said backing for supply-

ing a pulverulent electrically susceptible material, means for distributing said material during supplying of the same, and means for creating an electrical field including electrically charged elements below said supplying means and above said backing for propelling said material onto the backing under the influence of said field.

8. In an apparatus of the character described, in combination, means for supporting a backing, means for applying an adhesive thereto, means below and spaced from said backing for supplying a pulverulent electrically susceptible material, electrostatic means for distributing said material during supplying of the same, and means including electrically charged elements below said supplying means and above said backing for propelling said material onto the backing.

9. In an apparatus of the character described, means for applying an adhesive to a backing and for supporting the adhesive coated surface facing downwardly in a substantially horizontal plane, a hopper for pulverulent electrically susceptible material having a curved portion terminating in an outlet below and spaced from the adhesive coated portion of said backing, and means acting electrically on said pulverulent material for lifting it from said outlet and propelling it against said adhesive coated portion.

10. In an apparatus of the character described, in combination, means for supporting a backing, means for applying an adhesive to the under side thereof, a drum for feeding an abrasive material arranged to have its surface below and spaced from said backing, which is in a plane substantially tangential thereto, and a charged electrode above said backing for creating an electrical field and for moving material from the drum to said backing and influenced by said field to cause a predetermined positioning of the particles of abrasive material in relation to the backing.

11. In an apparatus of the character described, in combination, means for supporting a backing, means for applying an adhesive coating thereto, means for feeding said backing with the coated side down, a conveyor for abrasive material below and spaced from said backing, means for distributing abrasive material to said conveyor, and means for vibrating said conveyor for propelling the abrasive material distributed thereon therefrom to said coated backing.

12. In an apparatus of the character described, in combination, means for supporting a backing, means for applying an adhesive coating thereto, means for feeding said backing with the coated side down, a conveyor for abrasive material below and spaced from said backing, means for distributing abrasive material to said conveyor, and means for applying an impact to said conveyor for propelling abrasive material therefrom to said coated backing.

13. In an apparatus of the character described, in combination, means for supporting a backing, means for applying an adhesive coating thereto, means for feeding said backing with the coated side down, a conveyor for abrasive material below and spaced from said backing, means for distributing abrasive material to said conveyor, means for rendering taut a portion of said conveyor and for slackening a portion thereof beneath said backing, and a batter for imparting vibrations to said slackened portion for propelling the abrasive material therefrom onto said backing.

14. The method of coating a backing with a pulverulent material which includes as steps thereof moving the backing at a substantially uniform rate of speed in a substantially uniform plane, said backing having an adhesive coating presented downwardly, feeding the pulverulent material below said backing in spaced relation thereto, propelling the pulverulent material upwardly to cause the same to impinge upon said coated surface, and varying the distance between the backing and the pulverulent material, as for varying the thickness of the coating of the latter.

15. In an apparatus of the character described, in combination, means for moving a backing of sheet material at a uniform rate of speed, means for applying an adhesive coating to one side of said backing, means arranged below and in spaced relationship to said backing for conveying an abrasive material, means for moving said abrasive material onto said adhesive coated backing through the intervening space counter to the force of gravity, and means for varying the distance between said backing and said means for conveying abrasive material.

16. The method of manufacturing abrasives which includes as steps thereof, employing an adhesively coated backing, conveying and uniformly distributing in a substantially thin layer a quantity of pulverulent abrasive material to a point adjacent to but spaced from the coated backing, and projecting the abrasive material across the intervening space onto said backing the projecting force being controlled within limits affecting the axial position of said material.

17. In the manufacture of abrasives employing abrasives susceptible to the influence of an electrical field to axially arrange themselves in respect of said field, the improved method which consists in providing a carrier having a surface coated with an adhesive, depositing said finely divided abrasive material upon said surface by a force in a direction counter to the force of gravity, and dispersing the particles by the action of an electrical field as they are being deposited upon the surface.

18. The method of manufacturing granular coated webs which comprises applying a layer of adhesive to a side of a continuously moving web, moving said web in such a manner that the adhesive coated side is positioned downward, supplying irregularly shaped granular particles to a feed belt positioned beneath said web and moving in a direction substantially parallel therewith, and projecting the granular particles from said belt onto the adhesive coated web.

19. The method of manufacturing granular coated webs which comprises supporting an adhesive coated web with an adhesive side downward, supplying irregularly shaped granular particles to a mesh conveyor belt positioned beneath said web and projecting said particles from said belt onto said adhesive coated web by means of air blown through said mesh conveyor belt.

20. The method of manufacturing granular coated webs which comprises supporting an adhesive coated web with an adhesive side downward, supplying granular particles to a conveyor belt positioned beneath said web and moving said belt over and in contact with rotating beaters.

21. The method of manufacturing flexible webs coated with upstanding abrasive grain which comprises projecting the grain upwardly against an inverted adhesive coated web so that the grain is oriented in its flight and strikes and adheres to the inverted web in a position with its major axis at a substantial angle to the surface of said web.

[fol. 596]

22. The method of manufacturing flexible webs coated with upstanding abrasive granules which comprises selecting abrasive granules a substantial proportion of which are elongated in character, supporting an adhesive coated web with the adhesive side downward, projecting such grain upwardly against said adhesive surface in such a manner that a substantial proportion of the elongated particles are oriented in flight with their major axes at a substantial angle to the plane of said web and adhere thereto in such oriented position.

23. The method of making sand paper and other abrasives consisting in supporting the abrasive substantially parallel with the backing sheet and blowing the abrasive particles against the adhesive surface of the backing sheet to project thereinto at substantially right angles, while the backing sheet is in position to permit the surplus abrasive particles to fall away from the same.

24. A machine for making sand paper including, an endless belt carrier, a hopper and spreader for abrasive particles adapted to spread abrasive particles onto said endless belt as it travels past said hopper, and means for shooting the abrasive particles off of said belt against an adhesive surface on the paper adapted to make the abrading surface of the sand paper.

25. A machine for forming abrasive material including a porous flexible carrier belt, means for applying abrasive particles on said belt, means for supporting an adhesive coated backing sheet adjacent a portion of said carrier belt, a nozzle on the side of the carrier belt opposite the side supporting the abrasive particles, for directing a blast of air through said porous belt to blow the abrasive particles against the adhesive coating of the backing sheet.

26. An apparatus of the class described comprising a horizontally moving conveyor for abrasive particles, a horizontally moving adhesive coated web moving parallel to said conveyor above the same and having its adhesive surface exposed with relation to particles on said conveyor, and an electrical field disposed in the path of movement of said conveyor and web for propelling particles from the conveyor upwardly to said adhesive surface.

27. An apparatus of the class described comprising a horizontally moving conveyor for abrasive particles, a horizontally moving adhesive coated web moving parallel to said conveyor above the same and having its adhesive surface exposed with relation to particles on said conveyor, and an electrical field disposed in the path of movement of said conveyor and web for propelling particles from the web upwardly to said adhesive surface, said conveyor and web extending in proximity to each other beyond the point of electrical deposition whereby any surplus particles tending to remain on the web will be returned to said conveyor under the influence of gravity immediately after the web has passed from the electrical field.

28. Apparatus for the manufacture of granular coated webs comprising electrodes arranged one above another having opposing faces of substantial area, means for applying a potential difference to the upper and lower electrodes, means for supporting an adhesive coated web between said electrodes and with an adhesive coated surface downward, and means for supplying granular particles between said web and the lower of said electrodes, said apparatus being adapted to electrostatically project granular material against the downwardly facing adhesive surface of the web.

29. Apparatus for the manufacture of granular coated webs comprising electrodes arranged one above another having opposing faces of substantial area, means for applying a potential difference to the upper and lower electrodes, means for passing an adhesive coated web between said electrodes and with an adhesive coated surface downward, and means for supplying granular particles between said web and the lower of said electrodes, said apparatus being adapted to electrostatically project granular material against the downwardly facing adhesive surface of the web.

30. Apparatus for the manufacture of granular coated webs comprising electrodes arranged one above the other, means for applying a high electrical potential difference to the upper and lower electrodes, means for passing an adhesive coated web between said electrodes with the adhesive coated surface downward, a feed belt passing over the lower electrode for carrying the granular material into the electrostatic field between the electrodes and means for supplying granular material to the feed belt, said apparatus being adapted to electrostatically project the granular material from the feed belt upwardly against the downwardly facing adhesive coated surface of the web.

31. Apparatus for the manufacture of granular coated webs comprising electrodes arranged one above the other, means for applying a high electrical potential difference to the upper and lower electrodes, means for passing an adhesive coated web between said electrodes with the adhesive coated surface downward, a feed belt passing over the lower electrode for carrying the granular material into the electrostatic field between the electrodes, means for supplying granular material to the feed belt and additional means for controlling the quantity of granular material supplied to said feed belt, said apparatus being adapted to electrostatically project the granular material from the feed belt upwardly against the downwardly facing adhesive surface of the web.

32. Apparatus for the manufacture of granular coated webs comprising electrodes arranged one above the other, means for applying a high potential difference between said upper and lower electrodes, means for passing an adhesively coated web between said electrodes with the adhesively coated surface downward, a feed belt passing over the lower of said electrodes for carrying the granular particles into the electrostatic field between the electrodes, means for distributing said particles as a layer over said feed belt, said apparatus being adapted to electrostatically project the granular material upwardly as a shower with the particles spaced apart and free from each other.

33. Apparatus for the manufacture of granular coated webs comprising electrodes arranged one above the other, means for applying a high electrical potential difference between said upper and lower electrodes, means for passing an adhesively coated web between said electrodes with the adhesive coated surface downward, a feed belt for carrying the granular particles into the electrostatic field between the web and the lower of said electrodes, said apparatus being adapted to electrostatically project the granular particles upwardly through a substantially quiescent at-

mosphere against the downwardly facing adhesive coated surface of the web.

34. In apparatus for making a new sandpaper or emery cloth, the combination comprising a hopper for abrasive particles, an opening in said hopper to feed a thin layer of the abrasive particles out of said hopper, an endless belt adapted to pick up the thin layer of abrasive particles, means beneath said belt adapted to move the abrasive particles in relation to said belt, means for carrying the flexible backing sheet of the sandpaper or the like with a coat of adhesive over the surface thereof exposed at a point adjacent said means beneath said belt and said endless belt and in adjustable relationship to each other, whereby the abrasive particles carried by said belt are moved by said means beneath said belt to the surface of the adhesive on the flexible sheet automatically to coat the surface of the sheet with the abrasive particles standing out individually one from the other.

35. In apparatus for making a new sandpaper, the combination comprising a hopper for abrasive particles, an opening from said hopper to feed a thin layer of abrasive particles out of said hopper, an endless belt adapted to pick up the thin layer of abrasive particles, a blower beneath said endless belt adapted to blow the abrasive particles off said belt, means for adjustably disposing said endless belt and a flexible backing sheet of the sandpaper or the like with a coat of adhesive over the surface thereof in relation to each other adjacent said blower whereby the abrasive particles carried by said belt are blown by said blower into the surface of the adhesive on the flexible sheet automatically to coat the surface of the sheet with the abrasive particles standing out individually one from the other.

36. Apparatus for making sandpaper including an endless belt carrier, a hopper and spreader for abrasive particles adapted to spread abrasive particles onto said endless belt carrier as it travels past said hopper and means for moving the abrasive particles off said belt against an adhesive surface of a sheet in position to permit the surplus abrasive particles to fall away from the same and including means for receiving said excess particles and conducting the same away from the means for moving the same against the adhesive surface.

37. In a device for making abrasive material including, a carrier, a hopper for distributing abrasive particles onto said carrier, means for operating said carrier, means for shooting the abrasive off of said carrier, and means for extending the material having an adhesive surface at a point adjacent said means for shooting the abrasive in adjustable relationship to each other to cause the abrasive particles to adhere to the material and form the abrasive material.

38. An apparatus of the class described comprising a horizontally moving conveyor for abrasive particles, means for moving an adhesive coated web horizontally and parallel to said conveyor above the same so as to expose its adhesive surface with relation to particles on said conveyor, and means disposed in the path of movement of said conveyor and web for propelling particles from the conveyor upwardly to said adhesive surface.

39. An apparatus of the class described comprising a horizontally moving conveyor for abrasive particles, means for moving an adhesive coated web horizontally and parallel to said conveyor above the same so as to expose its adhesive surface with relation to particles on said conveyor, and means disposed in the path of movement of said conveyor and web for propelling particles from the conveyor upwardly to said adhesive surface, said conveyor and web extending in proximity to each other beyond the point of said means whereby any surplus particles tending to remain on the web will be returned to said conveyor under the influence of gravity immediately after the web has passed from the said means.

40. An apparatus for making sand paper including, an endless belt carrier, a hopper and spreader for abrasive particles adapted to spread abrasive particles onto said endless belt as it travels past said hopper, and electrical means for shooting the abrasive particles off of said belt against an adhesive surface on the paper adapted to make the abrading surface of the said paper.

41. The method of manufacturing granular coated webs which comprises applying a layer of adhesive to a side of a continuously moving web, moving said web in such a manner that the adhesive coated side is positioned downward, supplying irregularly shaped granular particles to a feed belt positioned beneath said web and moving in a direction substantially parallel therewith, passing said web through an electrical field including at least one electrode, controlling the spacing between said web and said feed belt, and projecting the granular particles from said belt onto the adhesive coated web during passage of the same through the electrical field.

42. The method of manufacturing granular coated webs which comprises applying a layer of adhesive to a side of a continuously moving web, moving said web in such a manner that the adhesive coated side is positioned downward, supplying irregularly shaped granular particles to a feed belt positioned beneath said web and moving in a direction substantially parallel therewith, passing said web and belt through an electrical field and projecting the granular particles from said belt onto the adhesive coated web while passing through said field.

43. The method of manufacturing granular coated webs which comprises applying a layer of adhesive to a side of a continuously moving web, moving said web in such a manner that the adhesive coated side is positioned downward, supplying irregularly shaped granular particles to a feed belt positioned beneath said web and moving in a direction substantially parallel therewith, passing said web and belt through an electrical field having an electrode disposed above said web, and projecting the granular particles by electrical attraction from said belt onto the adhesive coated web while passing through said field.

44. The method of manufacturing granular coated webs which comprises applying a layer of adhesive to a side of a continuously moving web, moving said web in such a manner that the adhesive coated side is positioned downward, supplying irregularly shaped granular particles to a feed belt positioned beneath said web and moving in a direction substantially parallel therewith, passing said web and belt through an electrical field having an electrode disposed above said web and another below said belt, and projecting the granular particles by electrical attraction from said belt onto the adhesive coated web while passing through said field.

45. A coating machine comprising a receptacle for abrasive particles to be applied as a coating

[fol. 598]

to a carrier including means to guide said carrier, means to discharge the particles from the receptacle to fall by gravity and to spread the same preliminarily, means in the path of the particles falling from the receptacle to feed them in a distributed condition toward said carrier and means to vibrate said last mentioned means, whereby the particles are further distributed and applied to said carrier.

46. Apparatus for adhesively affixing elongated or attenuated materials upon a surface comprising opposed electrode means insulated from each other, one of said electrodes being foraminous and serving to distribute said materials, means for establishing an electric field between said electrodes, means for feeding between said electrodes a web, the surface of which is to be coated with said materials and means for introducing elongated or attenuated materials to be directed into the electric field between said electrodes and cooperating with the openings in said foraminous electrode to feed the materials into the field in a distributed condition.

47. Apparatus in accordance with claim 46 in which there is included means for conducting an adhesively coated web between said electrodes, with the adhesive coated surface downwardly faced towards the foraminous electrode.

48. In a deposition apparatus, in combination, means for supporting a backing, means for applying an adhesive thereto and facing the adhesively coated backing downward, means below and spaced from said backing for supplying comminuted material susceptible of carrying an electrical charge for causing movement thereof, and means including electrically charged elements below and above said backing for propelling said material upward onto the backing to adhesively unite the same to said backing.

49. In a deposition apparatus in accordance with claim 48, the combination wherein said means for supporting the backing includes means for facing the adhesively coated surface thereof downwardly during the time said electrically charged elements are effectively operating upon the material which is propelled upwardly to the said adhesively coated surface of said backing.

50. Apparatus for the manufacture of granular coated webs comprising electrodes arranged one above the other, means for applying a potential difference to the upper and lower electrodes, means for supporting an adhesive coated web between said electrodes with an adhesive coated surface thereof downward, means for supplying granular particles between said web and the lower of said electrodes, said apparatus being adapted to electrically project granular material against the downwardly facing adhesive surface of the web, said electrodes being plates, which achieve orientation of a substantial number of the particles substantially normal to the plates and the web which is being coated between them.

51. Apparatus for the manufacture of granular coated webs comprising electrodes arranged one above the other, means for applying a potential difference to the upper and lower electrodes, means for supporting an adhesive coated web between said electrodes with an adhesive coated surface thereof downward, means for supplying granular particles between said web and the lower of said electrodes, said apparatus being adapted to electrically project granular material against the downwardly facing adhesive surface of the web, one of said electrodes being a plate.

52. An apparatus for forming bonded granular articles wherein elongated granular materials are adhesively combined upon a web for said materials comprising electrodes arranged to be spaced apart in relation to the web, means for applying a potential difference to said electrodes and means for supplying an adhesive to form a bond for said materials to said web and means for introducing elongated granular materials for said web between said electrodes, said electrodes being spaced apart and insulated from each other by the dielectric strength of the air and including the dielectric strength of insulating material applied to at least one of said electrodes which, by reason of the potential difference imposed upon said electrodes, maintains an electrostatic field adapted to electrostatically orient the elongated granular particles so that their longest dimensions lie in a predetermined direction in respect of said web.

53. Apparatus for the manufacture of granular coated webs comprising an electrode arranged to be positioned above the web to be coated and spaced apart from an electrode arranged to be positioned below the web, means for applying a potential difference to said electrodes, means for supporting an adhesive coated web between said electrodes and with the adhesively coated surface faced downwardly, and means for supplying granular particles between said web and the lower of said electrodes, said electrodes being spaced apart and insulated from each other by the dielectric strength of the air and the dielectric strength of insulating material applied to at least one of said electrodes, the potential difference imposed upon said electrodes and the dielectric between said electrodes maintaining an electrostatic field between said electrodes, said apparatus being adapted to electrostatically project granular particles against the downwardly facing adhesive surface of the web.

54. Apparatus for the manufacture of granular coated webs comprising a plate electrode arranged to be positioned above the web to be coated and spaced apart from a plate electrode arranged to be positioned below the web, means for applying a potential difference to said plates, means for supporting an adhesively coated web between said plates and with the adhesively coated surface faced downwardly, means for supplying granular particles between said web and the lower of said paltes, said plates being spaced apart and lying in the direction of travel of the web, and insulated from each other, the arrangement of the plates in relation to the potential difference imposed on said plates and the dielectric between the plates serving to maintain a strong electrostatic field, said apparatus being adapted electrostatically to orient and project granular particles against the downwardly facing adhesive surface of the web.

55. In an apparatus for coating particles of material upon a backing the combination comprising a carrier for particles of material deposited thereon, means propelling said particles upwardly against the force of gravity from the surface of the carrier upon which said particles have been deposited to a surface of said backing coated with an adhesive, means acting upon the particles deposited upon the carrier for distributing said particles of material, subsequent to deposition thereof on said carrier surface, to spread the same evenly on said carrier surface prior to the propulsion thereof to said adhesive coated surface of said backing.

56. Apparatus in accordance with claim 55

wherein the means for distributing the particles comprises electrically energized elements creating an electrostatic field which disperses the particles in relation to each other.

57. In an apparatus for coating particles of material upon a backing the combination comprising a carrier for particles deposited thereon, means propelling said particles upwardly against the force of gravity from the surface of the carrier upon which said particles have been deposited to a surface of said backing coated with the adhesive, means acting upon the particles deposited upon the carrier for distributing said particles of material subsequent to the deposition thereof on said carrier surface to spread the same on said surface prior to the propulsion thereof to said adhesive coated surface of said backing, said distributing means comprising mechanical means acting upon the particles to form a substantially uniform layer.

58. In an apparatus of the character described, means for supporting a backing, means for applying an adhesive thereto and means below and moving synchronously with said backing for feeding a pulverulent material, and means for applying said material to said backing.

59. In an apparatus of the character described, means for supporting a backing, means for applying an adhesive thereto, and means below said backing for feeding a pulverulent material, and means acting electrically upon said pulverulent material for applying it to said adhesive coated backing.

60. In an apparatus of the character described, means for supporting a backing, means for applying an adhesive thereto, and means below said backing for feeding a pulverulent material, and electrostatic means for applying said material to said backing.

61. The method of applying elongated particles of material to an adhesive coated surface of a backing which includes the steps of depositing said particles upon a moving surface, passing said moving surface through an electrostatic field generated by two vertically opposed electrodes wherein the particles are charged and successively repelled from the surface and deflected back by the upper electrode to the surface whereby said particles are distributed thereon to spread the same and form a uniform layer with the particles thereof evenly distributed, bringing said adhesive coated surface of said backing into spaced relationship to said moving surface and applying an upwardly directed force to the uniform layer to propel said particles against the force of gravity and to transfer the particles from said moving surface and to embed them endwise in the adhesive coating on said backing surface.

63. The method of coating a continuously moving adhesively coated backing with elongated particles of matter comprising forming the particles into a layer, conducting the layer through an electrostatic field generated by two vertically opposed electrodes, with the lines of force substantially normal to the layer where the particles are charged and successively repelled from the layer and deflected by the upper electrode evenly back to the layer to disperse and to distribute the particles in the layer, positioning the adhesively coated backing in a second electrostatic field which applies an upwardly directed force to the dispersed layer to propel the particles in a direction resisting the normal force of gravity onto the adhesive coated surface of the backing and arranging them on end by conducting the dispersed layer into the second field adjacent the adhesive coated side of the backing.

RICHARD PAUL CARLTON.

[fol. 600]

May 4, 1943. R. P. CARLTON 2,318,571

MANUFACTURE OF ABRASIVES

Filed Dec. 22, 1933 7 Sheets-Sheet 1

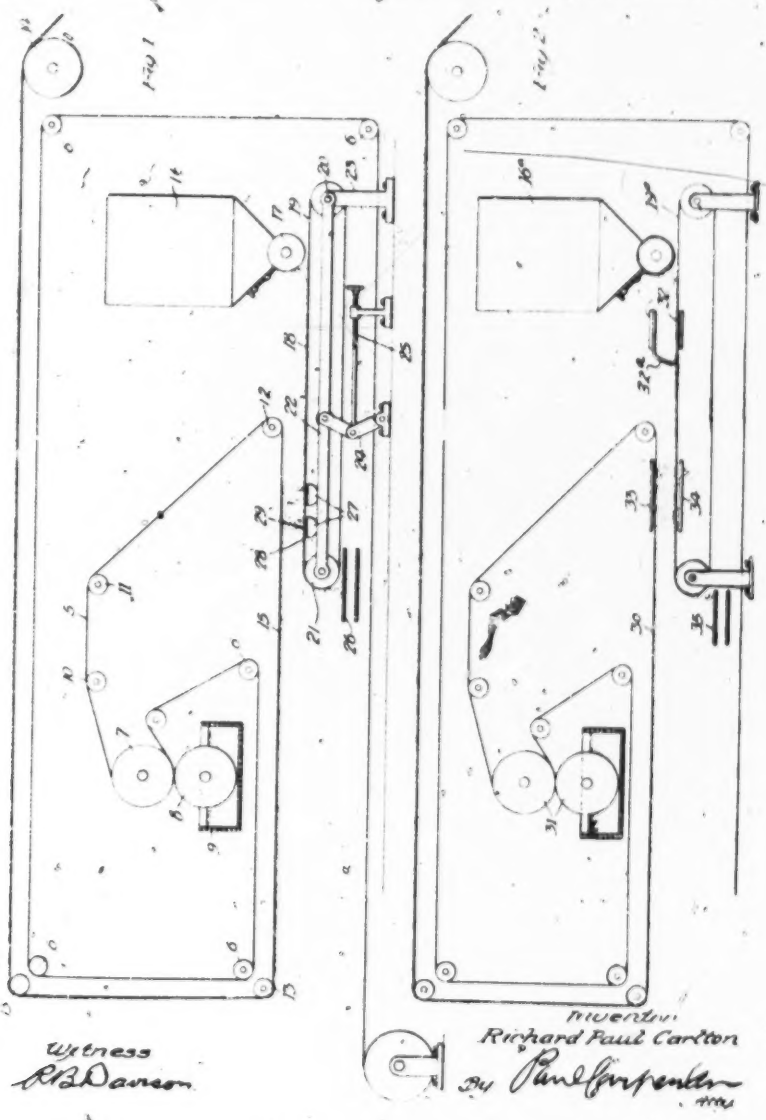

Witness
R. B. Dawson

Inventor
Richard Paul Carlton
By Paul Carpenter
Atty

[fol. 601]

May 4, 1943. R. P. CARLTON 2,318,571

MANUFACTURE OF ABRASIVES

Filed Dec. 22, 1933 7 Sheets-Sheet 2

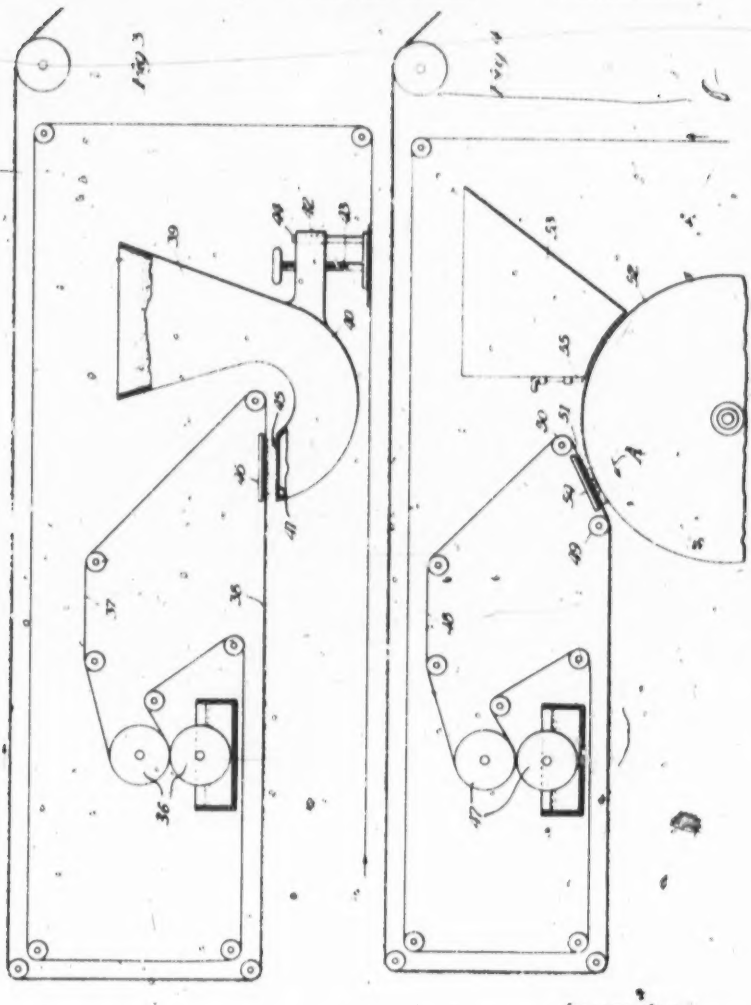

Witness
A. E. Carson

Inventor
Richard Paul Carlton
by Paul Carpenter
Atty

[fol. 602]

May 4, 1943. R. P. CARLTON 2,318,571

MANUFACTURE OF ABRASIVES

Filed Dec. 22, 1933 7 Sheets-Sheet 3

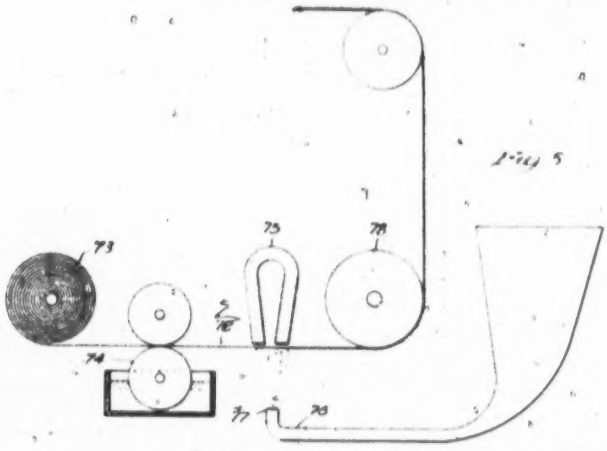

Fig 5

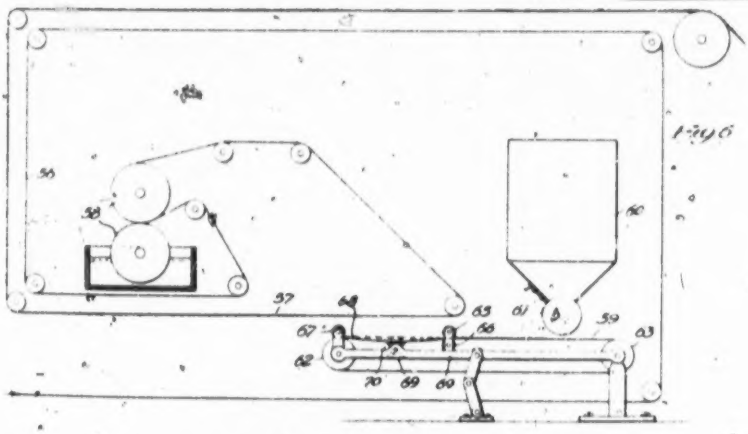

Fig 6

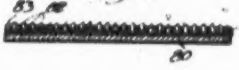

Fig 7

Witness
R B Davis

Inventor
Richard Paul Carlton
By Paul Carpenter
Atty

600

[fol. 603]

May 4, 1943. R. P. CARLTON 2,318,571

MANUFACTURE OF ABRASIVES

Filed Dec. 22, 1933 7 Sheets-Sheet 4

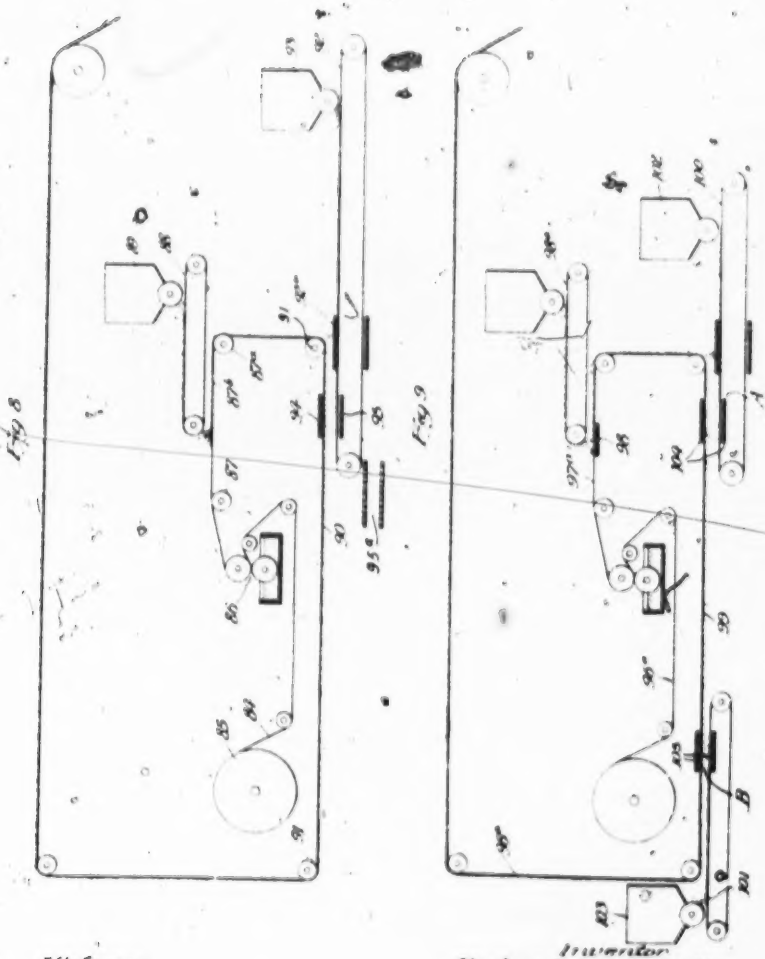

Witness

Richard Paul Carlton

Inventor

By

[fol. 684]

May 4, 1943. R. P. CARLTON 2,318,571

MANUFACTURE OF ABRASIVES

Filed Dec. 22, 1933 7 Sheets-Sheet 5

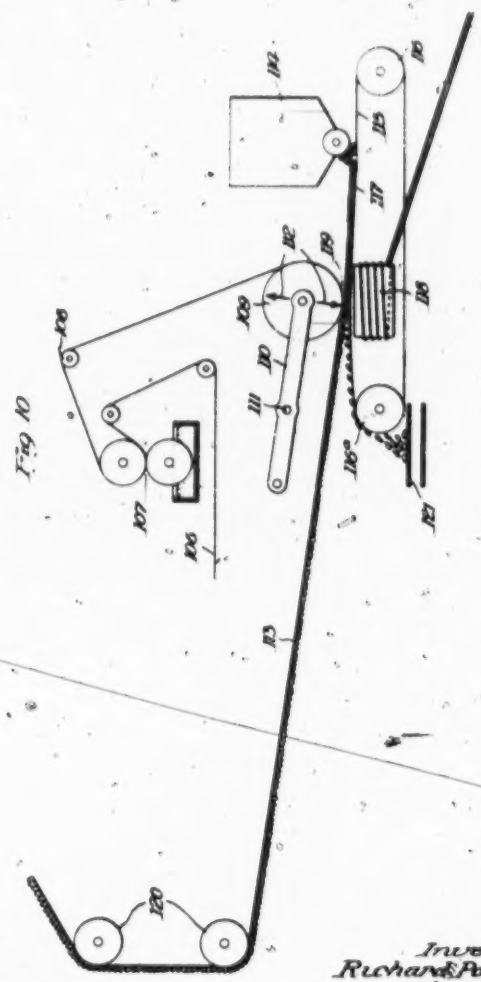

Fig 10

Witness
R B Carlton

Inventor
Richard Paul Carlton
By Paul Carpenter
Atty.

[fol. 605]

May 4, 1943. R. P. CARLTON 2,318,571

MANUFACTURE OF ABRASIVES

Filed Dec. 22, 1933 7 Sheets-Sheet 6

Fig 11

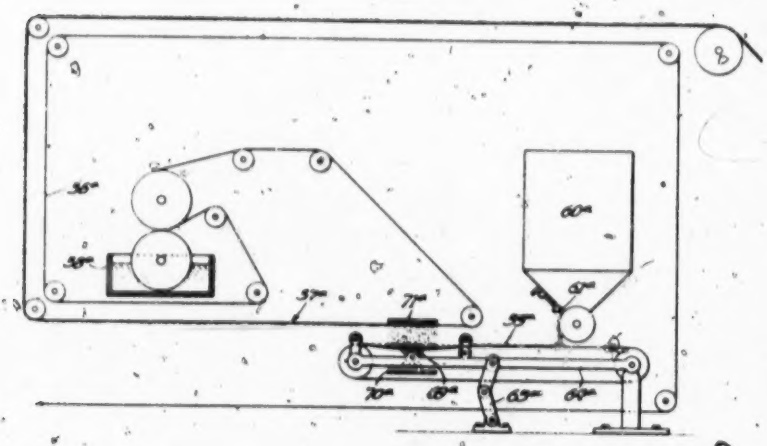

Fig 12

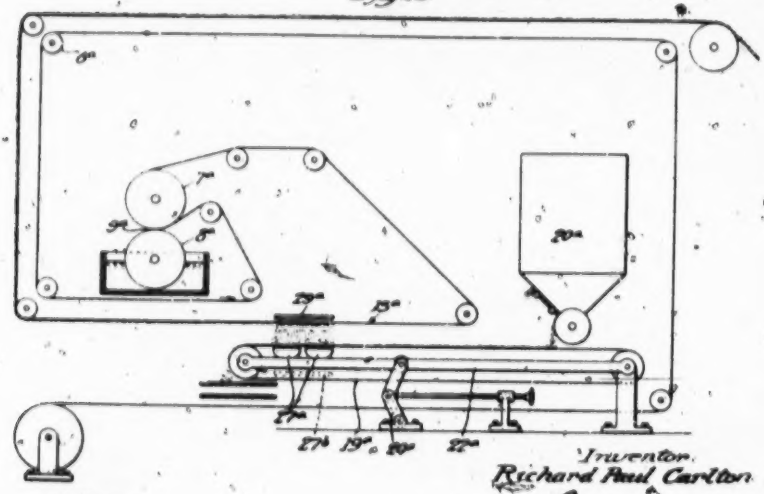

Witness
R B Davison

Inventor
Richard Paul Carlton
By Paine Carpenter Atty

[fol. 606]

May 4, 1943. R. P. CARLTON 2,318,571

MANUFACTURE OF ABRASIVES

Filed Dec. 22, 1935 7 Sheets-Sheet 7

Fig. 13

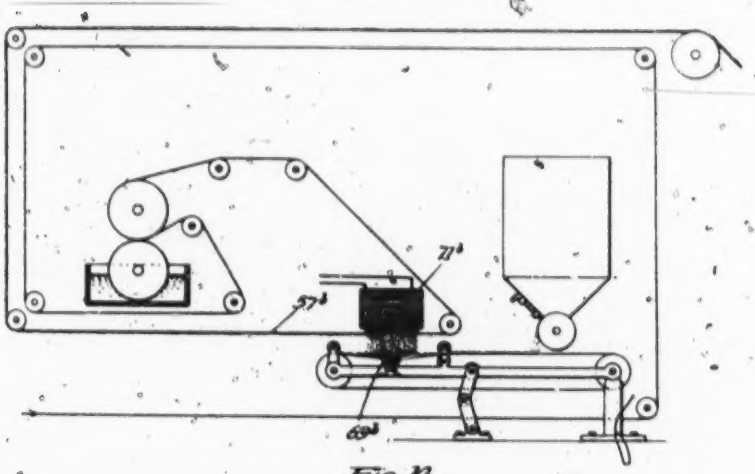

Fig. 14

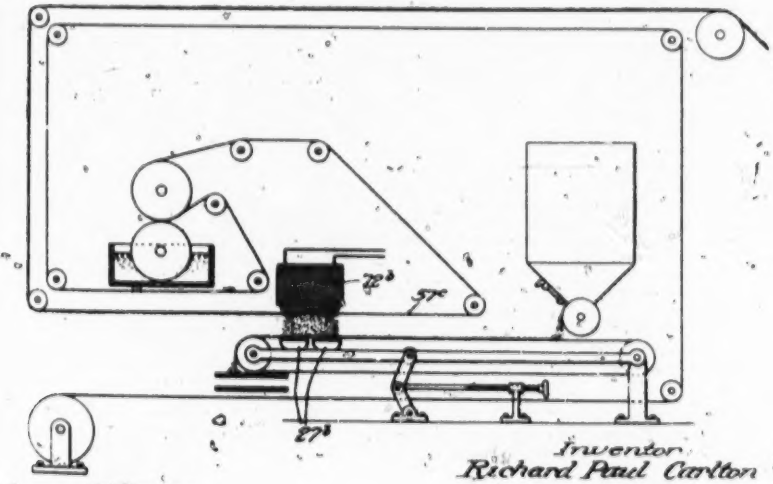

Witness
R. B. Dawson

Inventor
Richard Paul Carlton
By Paul Carpenter Atty.

[fol. 607]

Patented May 4, 1943

2,318,571

UNITED STATES PATENT OFFICE

2,318,571

MANUFACTURE OF ABRASIVES

Richard Paul Carlton, St. Paul, Minn., assignor to Minnesota Mining & Manufacturing Company, St. Paul, Minn., a corporation of Delaware

Application December 23, 1933, Serial No. 703,559

7 Claims. (Cl. 91—18)

This invention relates in general to coated articles and to the art of coating, and more particularly to an improved apparatus for applying pulverulent coatings to suitably adhesively coated surfaces, and while the invention finds particular utility in the art of making flexible abrasives, and is, therefore, described and illustrated for this purpose, it finds a wide field of utility for analogous purposes.

This application is a continuation-in-part of my applications S. N. 422,065 and 662,319, filed January 20, 1930 and March 23, 1933, respectively.

It is well known that in the art of making sandpaper, emery paper or cloth and similar abrasive articles, a flexible or in some cases, a rigid, backing of paper, cloth, wood or the like, is employed, to which is applied a coating of an adhesive substance, such as animal or vegetable glue, or where a waterproof article is desired, the backing may be coated with any of the now well known waterproof adhesives for this purpose, and while the coating is still wet or unset, a suitable, abrasive material such as garnet, corundum, sand, or the like is applied thereto. The grains of abrasive substances are usually applied by gravity upon the upper adhesive coated surface of the backing and they lie in the adhesive material in haphazard fashion due to the elongated nature of the abrasive particles, and, in a large degree, the facets or cutting edges of the individual grains or grits often lie flat upon or are embedded in the adhesive coating in such a manner that in some instances their best cutting edges never come into contact with the work, or, at best, are brought inefficiently into contact therewith. The invention here has as one of its objects to measurably increase the number of grits whose longer or greater dimensions are in a plane perpendicular to the surface of the backing, thereby to present more efficiently the cutting edges to the work, and increase the cutting ability and life of the abrasive article.

It will be understood that in ordinarily depositing mineral, that is, pulverulent abrasive material solely under the force of gravity onto a backing, it acquires a velocity due to the action of gravity. As the grits pass through the intervening air space, there will be caused some change in their positions en route to the sheet or backing, but ordinarily neither the velocity given to the grits or the effect of the air on them is sufficient to cause them to become aligned so as to assume positions substantially perpendicular to the backing. It is, therefore, necessary that independent force be applied to the grits, and I have found that by passing the grits through a static field of electric energy or of electro-magnetic energy or by mechanically imparting this force to the grits, a much greater number of the individual particles will assume erect positions on the backing, which will enhance its cutting ability. As will later appear, my invention, in its several forms, is capable of application for operation in conjunction with gravity methods of applying the grit, inasmuch as under certain conditions, and for some purposes, it is desirable to employ both gravity and one of the forms of my invention in conjunction in order to attain a desired form of abrasive article.

In carrying out this invention, I find it desirable to employ a conveyor for conducting the mineral at rest relative to the conveyor by relatively slow speed to a point adjacent to which the independent force is applied for projecting the particles of grit onto the backing. I find that by then applying this independent force, be it mechanical or electrostatic or electromagnetic, I am able to impart a high velocity to the particle so that any force of gravity acting on the particle, whether in the same direction, in a counter direction, or in a direction angularly to that at which the force is applied, will be relatively small compared to this force applied. It is possible with the present invention to apply the force directly counter to gravity, that is, by bringing the grits beneath the backing or by applying the force in some other direction as long as the force of gravity and the effect of air is reduced below a point which will interfere with the result desired, namely, the projection of the grits with their longitudinal dimensions ultimately perpendicular, or substantially so, with respect to the backing.

This invention further includes as objects and advantages thereof, the provision of an improved apparatus for manufacturing abrasive articles; the provision of an improved apparatus for applying pulverulent material to one surface of a backing irrespective of the force of gravity, that is, against the normal tendency of the force of gravity; the provision of an apparatus for propelling a pulverulent material, such as a grit or an abrasive grain, against an adhesive coated surface; the provision of an apparatus for the purpose set forth and including electrically operated means for acting on an abrasive grain or pulverulent material and causing it to advance onto the adhesive coated backing irrespective of the force of gravity; the provision of an improved apparatus for causing the particles of

[fol. 608]

pulverulent material to impinge upon and assume a position in the adhesive coated surface substantially normal or perpendicular to the surface of the backing; the provision of an improved apparatus for propelling a pulverulent material onto a moving sheet in a direction transversely to the plane of movement thereof and in a direction substantially counter to gravity; the provision of an improved apparatus for making abrasive articles, such as sandpaper and the like, which includes the application of a grit to the under side of the backing; the provision of an improved apparatus which includes means for feeding and applying a pulverulent material counter to the force of gravity and simultaneously with movement of the backing; the provision of an improved means for moving a web of paper and applying an adhesive thereto and including means arranged below and for operating synchronously with for applying a pulverulent material to the under side of said moving backing; and the provision of an apparatus of the character described wherein impelled electrostatic or electromagnetic means may be employed, acting on the abrasive material and causing it to move at an accelerated speed toward the sheet so as to cause it to impinge thereon in the adhesive coating and thereby present the cutting edges of the abrasive grits away from the surface of the backing and thus increase the cutting ability and life of the abrasive article.

The apparatus of this invention includes a number of alternative forms for mechanically or electrically carrying out the steps of the process and to this end is provided an improved pneumatic means and improved vibrator structure for mechanically propelling the pulverulent material and improved electrostatic and/or electromagnetic structure for acting on the mineral and causing it to move in a cloud toward the adhesive coated surface of the moving web or backing.

With the foregoing and such other objects and advantages as may appear or be pointed out as this description proceeds are attained in the structures illustrated in the accompanying drawings in which:

Figure 1 is a schematic view illustrating one form of apparatus for carrying out the process of this invention;

Figure 2 is a view similar to Figure 1 of an alternative form of the invention;

Figures 3, 4 and 5 are further alternative forms of the invention which include the electrical feature;

Figure 6 is a further alternative form of the apparatus of this invention for employing vibrating means;

Figure 7 is an enlarged schematic view illustrating a portion of an abrasive article made in accordance with this invention;

Figures 8 and 9 are additional alternative forms of apparatus for carrying out further steps of the process of this invention; and

Figure 10 is a further alternative form of apparatus for carrying out one of the methods of this invention;

Figures 11 and 12 are further alternative forms for carrying out additional methods of the present invention; and

Figures 13 and 14 are further alternative forms for carrying out additional methods of the present invention.

The operation of the apparatus includes as steps thereof the feeding of a web or strip of paper or other fabric at a predetermined rate of speed, applying an adhesive substance to the under side of the sheet, or applying the adhesive coating to one side and then moving the sheet with the coated side out, and simultaneously with the movement of the coated sheet causing a grit or abrasive material to be applied to this side. The sheet or web of paper may be moved so that the adhesive coated side is either presented downwardly or at any angle thereto. The movement of the abrasive grains onto the under side of the backing is done irrespective of the force of gravity and, in fact, directly counter to gravity, and preferably done by imparting relatively high velocity to the abrasive material, thus causing it to impinge upon the adhesive coating. In view of the fact that the abrasive grains are projected through an intervening space from a suitable carrier on to the adhesive coated side irrespective of or counter to the force of gravity, the grains, which are usually somewhat elongated, will assume a position in transit so that the longer dimension thereof will take a position normal to the surface of the backing, thus causing the grains to "stand" on the surface rather than lie flat in greater percentage than when they are deposited by gravity. It is to be understood that this movement of the grains and deposition of them on the coated surface may be carried out in a number of ways, either by vibration, by an air blast, or by electrostatic or electromagnetic means, or both.

In the alternative forms of this apparatus later to be described, the operation of the apparatus involved includes combining a gravity deposition of mineral on the adhesively coated moving backing with the step of applying the grits irrespective of gravity, this being particularly useful in some of the heavier grits wherein it may be found that the force susceptible of application by an electrostatic or an electromagnetic means is not sufficiently active on the available area of the individual grits to cause an entirely satisfactory result or to move enough of the grits onto the sheet to attain the desired end. In this invention it may be required to apply some of the grit by gravity and later apply some of the grit by one of the methods of this invention or vice versa, but, in any event, the number of grits in the entire finished article which stand erect on the backing will be measurably increased over the ordinary methods heretofore employed for depositing grit on a backing for forming an abrasive article.

This invention produces a very satisfactory piece of sandpaper in which the cutting ability is measurably increased and by the deposition of the grains of sand or grit irrespective of the force of gravity, it is possible to produce an orientation of the mineral as desired and to control the thickness of the abrasive coating much more readily than where gravity alone is relied upon or employed for depositing the grains on the sheet.

The apparatus of this invention may take one of the forms shown in the drawings and in the form of the invention shown in Figure 1, air pressure is resorted to for producing the mineral cloud and for projecting the mineral onto the moving web.

Referring now more particularly to Figure 1, the flexible backing 5 of paper or cloth or other fabric is trained or fed over a series of rollers 6, 6, and over one of a pair of the squeeze rollers indicated at 7, the other roller 8 of said pair being in contact with an adhesive material con-

tained in a tray or tank 9 by which an adhesive coating is applied to one side of the moving web. After receiving the adhesive coating, the web 8 is trained over rollers 10 and 11 and is brought back over a roller 12 so that the adhesive coated surface of said web is presented downwardly. The web may then be trained over rollers 13, 13, and fed to a suction drum 14, whence it passes into festoons for drying.

The mineral is supplied from a hopper 15 and a conventional outlet 17 which feeds a layer 18 of mineral to a moving conveyor 19. This conveyor 19 is preferably pirous and passes over the feeding rollers 20 and 21 and is adapted to move at a suitable rate of speed to supply a sufficient quantity of abrasive grain. In some cases, it has been found advantageous to move the conveyor at a speed substantially the same rate of speed as the web 18, although these speeds are, of course, variable. The rollers 20 and 21 are mounted in the ends of a suitable frame 22 and this frame may be raised and lowered so as to vary the distance between mineral conveyor 19 and the moving web 18. This frame 22 may be supported fixedly at one end, as indicated at 23, and the other end may be raised and lowered by a toggle arrangement 24 activated by a threaded rod 25. Below the conveyor 19 and at the movable end thereof, that is, adjacent to the web 18, there is provided a second conveyor 26 which serves to conduct away excess mineral which flows over the end of the conveyor 19 and which may be returned in any suitable manner to the mineral hopper,

Below the upper flight of the conveyor 19, there are provided two air troughs 27. These air troughs are provided with flat upper walls 28, having slots 29 therein, said slots extending across the width of conveyor 19 and the troughs themselves being connected to a suitable source of air under pressure.

These troughs form in effect elongated jets or nozzles and when so placed below the conveyor belt or frame 22, a small quantity of air is emitted at high velocity which passes through the porous belt or conveyor.

It will be understood that when a blast or blasts of air are delivered from the troughs 27, this blast of air passes through the porous conveyor 19 and blows the mineral from the conveyor against the under side of the flight 18 so that the mineral is caused to strike into the adhesive at a relatively high velocity and become impinged therein. Owing to the projecting of the mineral in this manner through the intervening air space, the individual particles of grit or abrasive material are caused to assume a position parallel to their trajectory, that is, with their longer dimension perpendicular to the surface of the flight 18. In view of the fact that most of the particles of mineral are somewhat elongated, due to the manner of production of the same, they will naturally assume this position in movement from the conveyor 19 to the adhesive coated surface of the backing. As they arrive at the adhesive material they impinge themselves therein and will thus stand erect in the adhesive, thus forming a sharper contour for abrasive purposes. By varying the rate of speed of the moving backing relatively to the speed of the conveyor and by varying the distance between the conveyor and the backing and the velocity of the air stream, and by increasing or reducing the number of such jets and the quantity of adhesive applied, any reasonable desired thickness of grit layer may be produced during the process and without stopping the apparatus. It will be understood that the excess mineral carried by the conveyor may be dumped into the conveyor 26 and returned by any suitable means to the hopper 15.

Referring now to Figure 2, there is provided the same general arrangement of moving backing, having the flight 30 adhesively coated from the squeeze rollers 31.

Below the flight 30 there is provided a mineral feeding conveyor 19a, receiving pulverulent material from the hopper 15a.

The conveyor 19a is mounted for movement toward and away from the flight 30 similar to the conveyor 19 and, therefore, this structure has not been shown in Figure 2.

As the mineral flows from the hopper 15a it does not always assume a smooth or even distribution on the conveyor 19A, and, therefore, it may be desirable to provide a pair of charged electrodes 32, one arranged above and one below the conveyor 19a, for the purpose of spreading the mineral evenly on the conveyor belt. The conveyor 19a in this instance may be non-porous.

When charged electrodes are put in this position they act in principle the same as the charged electrodes used for coating the mineral on the backing. An electrical charge or difference of potential is set up between the electrodes 32. The voltage or difference in potential between these electrodes is maintained great enough to produce a strong static field, but not so great as to break down the insulation between the plates, which insulation may be the dielectric strength of the air or the dielectric strength of the air plus the dielectric strength of any insulating material which may be used to wrap the electrodes.

As the mineral on the conveyor enters the static field between the plates the mineral particles take on the charge of the lower plate, and are repelled to the upper plate where they lose their charge and take on the opposite charge of the upper plate. At this point they are repelled to the lower plate. Since new mineral is being conveyed by the conveyor into the field continuously the static fields soon become supersaturated with mineral particles, and an equilibrium is reached where as many particles are thrown out of the static field as are brought in by the conveyor. By having a down-turned end 32a of the upper electrode the mineral particles that are thrown out of the static field are deflected evenly on the conveyor belt so that a smooth coating of abrasive grit is first placed on the conveyor.

The use of a static field for getting a smooth coating of mineral on the conveyor belt is not necessary to the invention but is an additional means of obtaining evenly distributed abrasive coatings, and is also a means for avoiding the use of any excess mineral on the conveyor. When the mineral is evenly coated on the conveyor at the time it is being coated, streaks, thin spots, etc., in the finished product are reduced.

At the same approximate point at which troughs 27 are provided in Figure 1 there are here provided electrically charged electrodes 33 and 34, the electrode 34 being located below the upper flight of the conveyor belt 19a and electrode 33 being disposed above the flight 30 of the backing. A sufficient difference of potential is maintained at electrodes 33 and 34 to produce a strong static field, similarly to that referred to above. This

[fol. 610]

static field moves the mineral from the belt 18a to the underside, which is the adhesive coated surface of the flight 38.

As the mineral enters the static field between the electrodes 33 and 34 it becomes charged with the charge of the lower plate, and is here propelled to the upper plate 33.

It will be observed that in this method of coating the mineral is applied by a force other than gravity. In all other methods of coating sandpaper, known to me, the velocity of the particle is either in whole or in part given to it by the force of gravity. In the case of this electrostatic coating the particles are oriented in the static field so that there is a tendency for the long dimension of the mineral to be perpendicular to the electrode plates, and also perpendicular to the web 36, which is being coated. The finished sandpaper product, therefore, contains a substantial percentage of the particles of mineral standing on end rather than lying flat, thereby increasing the cutting properties of the abrasive article.

Excess mineral is dumped onto the conveyor 36, whence it may be returned to the hopper 18a.

Referring now to the alternative form of the invention shown in Figure 3, there are provided the squeeze rollers 36 which apply adhesive to one surface of the moving paper web 37 and the adhesive coated surface thereof is presented downwardly in the flight 38.

In this instance there is provided a hopper 39, having a curved outlet spout 40 whose outlet 41 is presented below the moving web 38. The hopper may be provided with a bracket 42 whereby to receive a threaded member 43, said bracket engaging a guide post 44. In this manner, the hopper may be raised or lowered so as to vary the distance of the outlet 41 from the flight 38 of the backing. A suitable screen 45 may or may not be provided over the outlet so as to control the distribution of the mineral contained in the hopper. In this instance, the mineral flows by gravity to the outlet 41, but does not pass from the outlet to the adhesive coated backing by gravity, but under the effect of the static charge established between the electrode 46 and the hopper or the screen 45 of said hopper.

The operation of the invention here is much like that of Figure 2, the screen 45 serving the purpose of distributing the mineral and at the same time preventing the large body of mineral in the hopper from forcing it against the coated surface of the backing.

Referring now to the form of the invention shown in Figure 4, there is provided the adhesive coating rollers 47, applying an adhesive coating to one surface of the moving web 48. This web 48 is trained over rollers 49 and 50 so that flight 51 thereof between said rollers is presented in a plane tangential to the surface of a conveyor drum 52 whose lineal velocity is sufficient to furnish the required amount of mineral. This drum is fed from a hopper 53 and forms one electrode of the electrostatic system. The other electrode is indicated a 54 and is disposed above the flight 51. As mineral issues from the gate 55 of the hopper, the drum rotating in the direction of the arrow a, the mineral is carried to a point adjacent to the flight 51 whereupon the electrostatic charge set up between the drum 52 and the electrode 54 will cause a projection of the mineral from the drum onto the coated surface of the flight 51.

Referring now to the alternative form of the invention shown in Figure 5, there is employed here electromagnetic means or a permanent magnet means for moving the grits toward the adhesively coated web. The adhesively coated web is shown at 72 and is fed from a roll 73 over an adhesive coating roller 74. The horizontal flight of the web 72 passes beneath magnet 76 which may be either an electromagnet upon which a variable voltage may be imposed or a permanent magnet.

Immediately below the magnet 76 and the flight 77 of the web, there is provided a source of supply for the mineral, that is, the abrasive material, indicated at 78. This source includes an outlet 77, and the distance between the outlet 77 and the moving web 72 may be varied as desired, or the intensity of the electromagnet, where one is employed, may be varied for changing the thickness of the abrasive coating. The web passes over an idler 78 whence it is fed to festoons not shown.

Referring now to the form of the invention shown in Figure 6, the moving web 86 is trained over a series of rollers similar to the arrangement shown in Figures 1 and 2 so that a horizontal flight 87 of the paper backing is provided, having an adhesive coating on the under side thereof. Squeeze rollers 88 engage the paper backing for applying an adhesive thereto.

In this form of the invention, a mechanical vibrating means is provided which serves to propel the mineral, that is, the grit, from the grit feeding conveyor 89, which latter receives mineral from the hopper 90, having a gate 91. The conveyor 89 is trained over rollers 92 and 93 mounted in a suitable frame 94, which latter may be mounted for adjustment toward and away from the flight 87 similarly to the conveyor 19 of Figure 1. The conveyor 89 extends below and is separated from the flight 87 of the paper web and travels at substantially the same speed as the paper web.

The conveyor 89 passes between sets of pinch rollers, one above and one below the upper flight of the conveyor 89, as indicated by 95 and 96, and also beneath a pinch roller 97 which bears on the roller 92. The pinch rollers 95 and 96 tend to distribute the mineral evenly over the surface of the conveyor and are so spaced from the roller 92 and 97 that the portion of the belt 89 between the rollers 95 and 96, and 92 and 97 is permitted to lie slack, whereas the remaining part of the conveyor is substantially taut. This arrangement tends to limit the vibration of the conveyor belt to the zone of application of the mineral to the paper backing, as indicated at 98.

Beneath the portion 99 of the belt 89, there is provided a revolving batter 99 operating on a shaft carried in suitable bearings in the frame 94 and provided with a plurality of radial arms 79 which upon rotation rigidly strike the under side of the portion 99 of the belt, thus throwing or projecting the mineral content thereof against the under side of the adhesive coated paper backing, much in the manner in which the air stream blows the mineral or grit against the paper backing as shown in Figure 1. The batter 99 may be driven in any desired manner from a separate source of power or may be connected suitably with the rollers driving the belt 89, but geared to operate at a greater rate of speed. The rollers 95 and 96 and the roller 97 are separately driven from the belt 89 so as to produce the tautness in the belt, except the flight of the belt indicated at 98.

In Figure 7, there is illustrated an article made in accordance with the present invention. The backing is shown at 80, to which an adhesive coating 81 has been applied, and the grits, greatly enlarged, are indicated at 82 and it is noted that they stand on end in the adhesive coating, thus causing their sharper edges to project beyond the upper or outer surface of the coating, thereby enhancing the cutting ability and increasing the life of the abrasive article. While the article shown in Figure 7 is purely schematic, it will be understood that the mineral actually does take a position substantially normal to the backing and, while all of the grits may not take this position, a large number of the same do and the cutting qualities of the abrasive article are thus greatly increased. Furthermore, by so disposing the grits, it permits of the application of an additional sizing coat or coats to the back and to the fronts or cutting face of the abrasive material without completely burying the grits and as a thicker coat of adhesive may thus be employed on the cutting face of the abrasive material, the engagement of the adhesive material with the abrasive material is greatly enhanced, thus further tending to increase the life of the abrasive article. Such a sizing coat is indicated at 83.

As previously pointed out where the electrostatic or electromagnetic methods are resorted to in some of the coarser grades of abrasive devices made, it may be found that the electrostatic or magnetic field into which the particles are conducted may not exert on each individual particle sufficient force to cause proper orientation of the particles for the reason that the static effect is substantially proportional to the area of the particle and the coarser the particle, the smaller the area of effect per weight. Therefore, as larger grits or sizes of particles are employed, increased force is required to move the particle and for some purposes, insufficient increase in force results because of the reduced area per weight. Therefore, in such cases a form of the invention, as shown in Figure 8, may be resorted to wherein the mineral is applied to the adhesively coated backing in part by gravity and in part by electrostatic or electromagnetic means.

In view of the fact that the electrostatic and electromagnetic means may for some purposes be alternatively employed, I have illustrated in Figure 8 merely the electrostatic elements though it will be understood that the electromagnetic means of Figure 5 may be employed in the same manner.

Referring in detail to Figure 8, I have illustrated a web of paper 84 coming off a roll 85 and passing through an adhesive coating device illustrated in general at 86. The web 84 is thence trained over rollers 87, 87a, so that it has a substantially horizontal flight 87b, which receives grits in the desired amount from an ordinary conveyer 88, said conveyor receiving grits from the hopper 89. The web of paper thence is carried downwardly to a horizontal flight 90 by the provision of rollers 91, 91 and adjacent one end of this flight I provide the conveyor 92 receiving additional grits from the hopper 93, which may be adjustably mounted similar to the conveyors hereinabove described, said conveyer 92 passing beneath the flight 90 of the paper web. As the web passes over the rollers 87a and 91, a quantity of the mineral deposited from the conveyor 88 onto the web will drop off, and, for conveying away this excess mineral, I provide a transversely running conveyor 92a arranged between the flight 90 and the conveyor 92. Beneath the upper flight of the conveyor 92 and above the flight 90 of the web 84, I provide static electrodes 94 and 95, or may provide an electromagnet similar to that shown in Figure 5 which will cause grit coming from the hopper 93 to be applied counter to the force of gravity onto the under surface of the flight 90. A conveyor 95a may be employed for carrying off the excess mineral from the conveyor 92.

In the operation of this form of the invention, it will be understood that a desired proportion of mineral applied by gravity to that applied by force other than gravity may be determined by actual operation so that the desired quantity of the abrasive grits is properly applied to the paper web.

It may be necessary in some of the very coarse grains to additionally apply grit to the moving web and this may be done by providing an additional conveyor similar to that indicated at 92 and additional electrodes, or may be accomplished by additionally applying by gravity grits to the paper web just before it passes on to the festoons.

Figure 9 illustrates the alternative forms suggested in connection with Figure 8, that is, wherein electrostatic or electromagnetic means, or any other means counter to gravity, is employed for applying the grits and in Figure 9 the paper web is indicated at 96c having a horizontal flight 97a disposed below a conveyor 98a. In this instance, the grits are deposited from the conveyor 98a by gravity, and the orientation of the grits is assisted by a plate electrode 99. The paper web may then be carried in position so as to provide a horizontal flight 96 and an electrostatic or electromagnetic or other grit applying means for applying grit counter to gravity may be employed at one or more points as indicated at A and B, wherein the conveyors 100 and 101 convey grit from suitable hoppers 102 and 103, and electrodes 104, 104 and 105, 105 serve to apply the grit.

Referring now in detail to Figure 10, there is further illustrated there an apparatus for applying the grit to the adhesively coated backing by an electromagnetic means. In this form of the invention a moving web is provided indicated at 106, this web being a flexible strip of paper which is suitably adhesively coated by a mechanism indicated generally at 107.

The moving web thus adhesively coated is carried over a roller 108, thence over a roller 109, said roller 109 being mounted on a shaft carried in a bearing arm or arms 110 pivotally mounted at 111, whereby the roller 109 may be raised and lowered in the substantially vertical plane of the arrows 112, thus permitting the lower flight 113 of the paper web to be elevated or depressed, as the case may be.

Mineral is deposited from a hopper 114 on to a conveyor 115 trained over rollers 116 and 116a, the upper flight 117 of said conveyor passing beneath the rollers 108 and the moving web, and conveying mineral, that is, the grit, to a point adjacent to the roller 109.

Preferably immediately below the axis of the roller 109 and below the upper flight 117 of the conveyor 115 I provide an electro magnet 118 which is so mounted that its magnetic flux passes through the conveyor and causes the mineral particles to stand erect, as indicated at 119, as they move along with the upper flight of the conveyor. While the mineral particles are thus standing

[fol. 612]

erit they come into contact with the adhesively coated side of the paper backing and are thus picked up by it and conveyed away, the backing being trained over rollers 120 and carried to the festoons similarly to the other forms of the invention. It will be observed that the angularity of the lower stretch 113 of the paper web is such that it lies upwardly to the conveyor 115. In this way the particles of grit adhering to the paper are not knocked down by other particles remaining on the conveyor, it being understood that the grit is fed somewhat in excess of the required amount so that an adequate amount will be deposited on the adhesively coated side of the backing. The excess mineral drops off the conveyor 117 and is carried to a collecting means by a conveyor 121.

It will be understood that the amount of mineral fed from the hopper, the strength of the electro magnet, that is, the strength of the flow current transferred and the position of adjustment of the roller 109 may all be properly correlated for obtaining the desired grade of finished article.

It may be desirable that a certain amount of pressure be exerted on the erect particles of mineral so as to cause them to impinge upon the adhesively coated side of the paper and thus, by manipulation of the arms 116, an adjustment of the pressure of the roller 109 may be attained.

It will be understood that while the electrostatic and electromagnetic means for coating counter to gravity are illustrated in Figures 8 and 9, the mechanical means hereinabove described may be conveniently employed in these locations without departing from the spirit of the invention. However, the reason the electromagnetic and electrostatic elements are particularly shown here is that the difficulty of counter coating successfully with the coarser grains is more likely to arise with these elements than with the vibrator or air blast heretofore described.

It will be understood that the forms of the invention disclosed herein employing electromagnetic fields are suitable for use with magnetically responsive materials but that other grit or abrasive material may be coated with a magnetically responsive film which would render the grit responsive to the action of the magnetic or electro-magnetic fields.

In the actual production of this invention, particularly where an electrostatic field is employed, some grit sizes require the employment of very high voltages and in employing such high voltages it will be appreciated by those skilled in the art that this involves the construction and installation of special electrical apparatus for producing and maintaining the high voltages, and at the same time necessitates the provision of adequate protection for workmen engaged in the production of sandpaper or the like abrasive article under these conditions.

The form of the invention shown in Figure 7 hereinabove described, is found to be of value in that lower voltages may be employed for producing deposition and orientation of the particles of grit, inasmuch as there is a constant mechanical force exerted on the particles tending to move them toward the sheet to be coated. It is to be noted that the screen disclosed in Figure 3 may be omitted and a controlled supply of the particles to the outlet afforded in any convenient manner. Furthermore the mounting of the hopper in Figure 3 may be adjusted so that the outlet is moved toward or away from the sheet as desired. In this instance, due to the force of gravity on the mass of abrasive particles contained in the hopper bearing on those adjacent the outlet, the particles are moved upwardly toward the sheet by the mechanical force thus exerted. Coupled with this, an electrostatic field of a relatively lower voltage or difference of potential may be employed.

Owing to the fact that the structure of Figure 3 involves the provision of means for obtaining a nicety of control and balance which might readily become out of control in use, I have provided the forms of the invention shown in Figures 11 and 12.

In the structure of these figures it is possible to control to a nicety the mechanical and electrical forces exerted to obtain the desired result, namely, orientation of the particle on the adhesively coated sheet with its major axis perpendicular to the sheet.

Referring now to Figure 11, it will be observed that a flight of paper follows the path similar to that shown in Figure 6, the paper being indicated at 86a, and being coated on one side from a tank 88a, and supplied to the coating apparatus with one flight 87a of the paper, having its adhesively coated side presented downwardly. Beneath the adhesively coated flight 87a, I provide a conveyor 96a on which grit particles are deposited from a controlled hopper 98a having a gate 81a. The conveyor 96a supplies the grit particles in a direction to the left as viewed in Figure 11 to a point below the adhesively coated flight 87a of the paper web.

Beneath the conveyor 96a adjacent to the point of deposit of grit on the sheet, I provide a beater 68a, similar to that shown in Figure 6. The beater and conveyor are mounted on suitable supporting means comprising the arm 64a, and toggle means 65a for adjusting the arm and the conveyor.

Also supported from the arm 64a I provide an electrode 76a, which has a complemental electrode 71a located above the horizontal flight 87a of the paper web, thus the beater acts to raise the grit particles from the conveyor 98a and may be regulated so as to exert a force insufficient for causing the particles to reach the adhesively coated sheet 87a, but when the electrical field is established between the electrodes this field combining its forces with the mechanical force exerted by the beater will serve to cause the particles to be propelled on to the adhesively coated surface and due to the polarisation effect of the electrostatic field to orient the particles with their major axes substantially perpendicular to the adhesively coated sheet.

It will be understood that by proper control of the electrostatic field and the mechanical forces imparted to the particles by the beater 68a that quite as desirable effects can be obtained in the ultimate abrasive article as are obtained in the other forms of the invention already described. Furthermore, this form of the invention permits of the employment of a much lower difference of potential or voltage between electrodes for obtaining the desired result.

Referring now to Figure 12, there is provided a web of paper trained over rolls 8a and coated at 8a by rolls 9a and 8a, this web being so trained over additional rolls as to present an adhesively coated flight 18a with the adhesive presented downward.

Beneath the flight 18a I provide a supporting arm 21a having mounted thereon a conveyor 19a

receiving sand from a hopper 28s. The arm 22a may be adjusted by a toggle mechanism indicated at 24a and the conveyor 18a conducts grit from the hopper 28a to the point beneath the flight 18a of the adhesively coated web.

At this point I provide a plurality of nozzles 27a delivering an air blast upwardly through the conveyor 18a, said conveyor preferably being of a screen character permitting the air stream to pass through the conveyor and to tend to raise the grit particles into the space between the conveyor and the adhesively coated surface of the flight 18a.

Above the flight 18a I provide an electrode 29a and the air blast nozzles 27a may serve as another electrode supplemental to the electrode 29a.

Thus an electrostatic field may be established between the electrode 29a and the nozzles 27a, but of insufficient force to, operating alone, lift the grit particles and deliver them to the adhesive sheet, but coupled with the agitation of the particles caused by the air blast, the combined forces of the air blast and the electrostatic field serve to deposit, orient and distribute the particles in the desired position on the adhesively coated flight 18a.

If desired, a separate electrode 27b may be added instead of employing the nozzles 27a as electrodes.

Referring now more particularly to Figures 13 and 14, it will be observed that here, in place of the two electrodes forming the electrostatic field, as shown in Figures 11 and 12, I may substitute electro-magnets 71b and 72b, located above the flights 87b and 87c of paper to be coated.

It will be understood in this instance that the grit particles will either be of an inherently magnetically responsive character or provided with a treatment such as a coating of electromagnetically responsive material for permitting them to be acted on by the magnetic field and directed toward the adhesively coated underside of the flights 87b and 87c of the paper.

The beater is schematically indicated at 88b in Figure 13, and the air blasts are schematically indicated at 27b in Figure 14.

It will be understood that the remaining portions of these figures are substantially the same as that shown in Figures 11 and 12 and further reference thereto is, therefore, not deemed to be necessary.

I wish to point out that where the expressions "electromagnetic" and "electrostatic" are employed in the specification, I refer to the employment as well of a permanent magnet or some other form of static charge or magnetic charge which will perform the function.

Features herein not specifically claimed in the aforementioned Carlton applications are reserved for companion applications Serial No. 401,484, filed July 8, 1941, and Serial No. 452,822, filed July 23, 1942.

Having thus described my invention and illustrated its use, what I claim as new and desire to secure by Letters Patent is:

1. In an apparatus of the character described, including means for adhesively attaching pulverulent material to a backing, the combination comprising means for supporting a backing, means for applying an adhesive thereto and means below said backing for feeding a pulverulent material, and magnetic means for orienting said material in respect of said backing.

2. In an apparatus of the character described, means for supporting a backing, means for applying an adhesive thereto and means below said backing for feeding a pulverulent material, and electromagnetic means for applying said material to said backing.

3. In a coating apparatus, in combination, means for feeding an adhesively coated sheet in the direction of its surface, means for mechanically moving particles of abrasive material and said sheet towards each other, and magnetic means for establishing an electrical field for acting upon the particles for orienting them in respect of the sheet.

4. In an apparatus for manufacturing abrasives, in combination, means for mechanically moving particles of abrasive material and an adhesively coated sheet downwardly faced toward each other, and means for subjecting the said particles to the action of a magnetic field.

5. In an abrasive coating apparatus, in combination, means for feeding an adhesively coated sheet with the adhesive surface presented downwardly, means for supplying, adjacent to said surface, abrasive particles, said means including bringing said surface and abrasive toward each other, and means for subjecting said particles to the action of a magnetic field for orientation thereof in respect of said surface.

6. In a coating apparatus for coating with abrasive particles in combination, means for feeding an adhesive coated sheet, means for mechanically bringing said particles of abrasive material and said sheet towards each other, and means for establishing a magnetic field for acting upon the particles for orienting them in respect of the sheet.

7. Apparatus for the manufacture of web coated with oriented granular material comprising means for producing a magnetic field, means for supporting an adhesive coated web in said field, means located on the adhesive coated side of said web for introducing magnetically susceptible particles into said field, said apparatus being adapted to magnetically project said particles onto the adhesive coated web and orient them with respect thereto.

RICHARD PAUL CARLTON.

[fol. 614]

Sept. 7, 1943. N. E. OGLESBY 2,328,577

PROCESS AND APPARATUS FOR GRADING AND FOR COATING WITH COMMINUTED MATERIAL

Filed Jan. 12, 1940 2 Sheets-Sheet 1

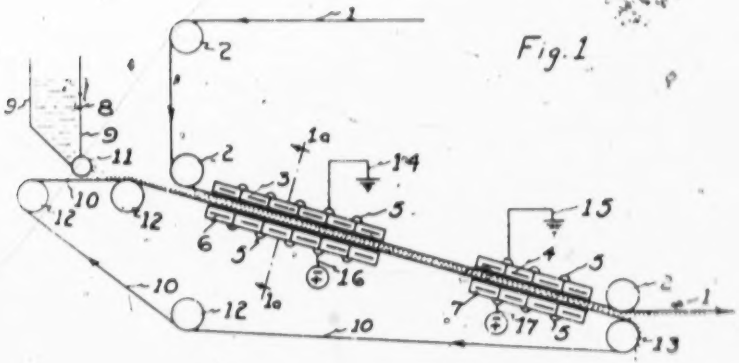

Fig. 1

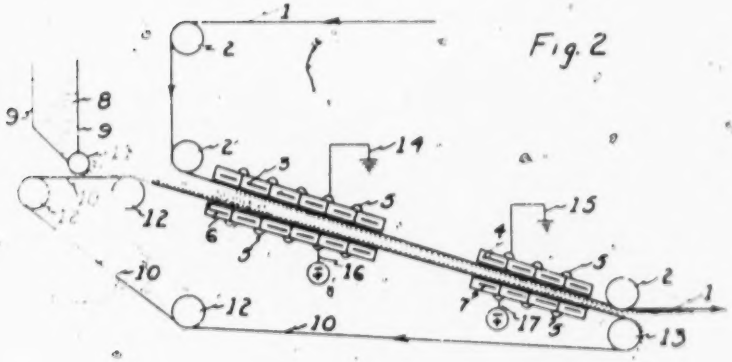

Fig. 2

Fig. 1a

INVENTOR

Nicholas E. Oglesby

BY Cushman Darby & Cushman

ATTORNEYS

[fol. 615]

Sept. 7, 1943. N. E. OGLESBY 2,328,577

PROCESS AND APPARATUS FOR GRADING AND FOR COATING WITH COMMINUTED MATERIAL

Filed Jan. 12, 1940 2 Sheets-Sheet 2

Fig 3

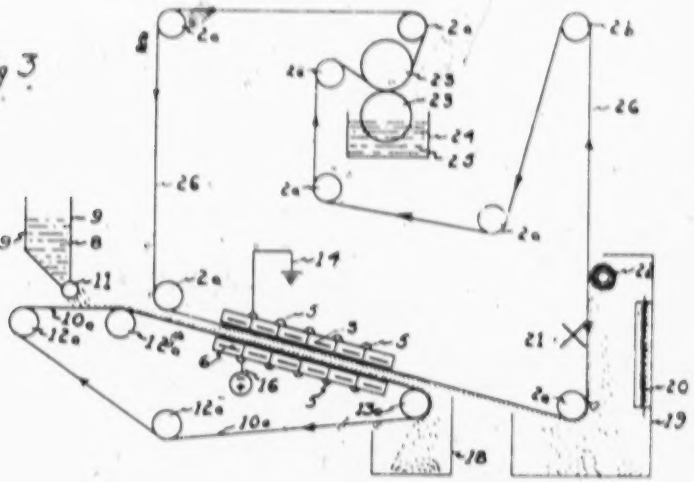

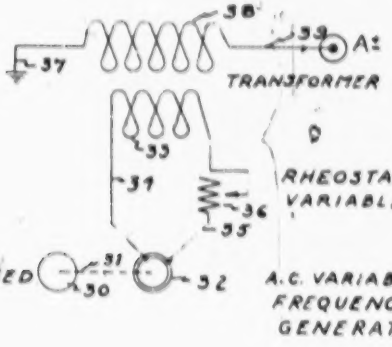

Fig 4

INVENTOR

Nicholas E. Oglesby

BY

Cushman Darby & Cushman

ATTORNEYS

[fol. 616]

Patented Sept. 7, 1943

2,328,577

UNITED STATES PATENT OFFICE

2,328,577

PROCESS AND APPARATUS FOR GRADING AND FOR COATING WITH COMMINUTED MATERIAL

Nicholas E. Ogleaby, Troy, N. Y., assignor to Behr-Manning Corporation, Troy, N. Y., a corporation of Massachusetts

Application January 12, 1940, Serial No. 313,669

12 Claims. (Cl. 117—17)

This invention relates to the separation or grading of comminuted material such as abrasive grains, flocks, and the like, and is particularly concerned with improved electrostatic separation or electrostatic grading methods. More specifically this invention also relates to coating all or part of the separated or graded comminuted material onto an adhesively coated foundation material.

It is an object of this invention to coat the finer and less effective abrading particles, from a mixture of abrasive particles, on the bottom of a coated abrasive coating and to coat the coarser abrasive particles on the top of the coating. It is a further object of the invention to use an abrasive grain which has been less accurately graded than has heretofore been considered necessary and to coat such an abrasive in such a way that the top or effective abrading grains will be more uniform in grade than the average grade or size of all the grains coated. Another object of the novel method of coating provided in this invention is to avoid coating relatively coarse particles with which the mixture of abrasive grains delivered to the coating machine may be contaminated, or to coat a finer grade of abrasive than the average grade of abrasive delivered to the coating means. A further object of this invention is the production of a relatively deep coating of abrasive grains in oriented relation, with a non-loading or open spaced oriented grain effect at the top of the coating. Still another object of this invention is the provision of suitable apparatus for carrying out the novel processes described. It is a further object of this invention to separate abrasive grains of variable size into two or more fractions, one of which is coarser than the other. In stating the foregoing objects of the invention, abrasive grains are given as a preferred illustration of the material worked upon by the novel process and apparatus. It is to be understood that other comminuted material, such as flocks, may be coated or handled in an analogous way, and that abrasive grains are representative materials that may be processed in accordance with this invention.

The method and apparatus by which my invention is carried out will be explained by reference to the accompanying drawings, in which:

Figure 1 is a side elevation of one form of apparatus which may be used for carrying out my invention;

Figure 1a is a section on the line 1a—1a of Figure 1.

Figure 2 is a side elevation showing a modification of the apparatus used in Figure 1;

Figure 3 is a side elevation of a form of apparatus for carrying out another modification of the invention;

Figure 4 shows a wiring diagram for obtaining the variable frequency alternating current of high potential used in carrying out my invention.

Similar reference characters refer to similar parts throughout the several drawings.

Referring to Figures 1 and 2:

Numeral 1 is an adhesively coated web such as paper or cloth, or combinations of paper and cloth. Numerals 2 represent suitable idler rolls over which the web 1 is continuously drawn through the electrostatic field, by means not shown. Numeral 3 represents an electrode which may be a solid electrode or a bank of electrodes as illustrated in Figures 1 and 2. In the same way numerals 4, 5 and 7 represent electrodes which may be solid or a bank of individual electrodes, as illustrated in the figures. The electrodes may be made of suitable metal or other conducting material and they may be insulated or not insulated, but I generally prefer to use insulated electrodes, phenol formaldehyde resin or paper impregnated with such resins forming a suitable insulating covering for the electrodes or banks of electrodes. Numeral 5 represents connections between the individual electrodes forming a bank of electrodes, as for instance, electrode bank 3 may contain six electrodes connected together as indicated by numeral 5. Various sized electrodes may be used but an electrode having a dimension of about 6 inches in the direction of travel of the web and surrounded by ¼ inch of insulation has been found generally satisfactory for my purpose. With each individual electrode having a conducting dimension of 6 inches in the direction of travel of the web and ¼ inch of insulation surrounding the conductor, the electrode bank 3 containing six such electrodes would have a total dimension of 3¼ feet in the direction of travel of web 1. In the same way, electrode bank 4 would have a total dimension in the direction of travel of the web 1 of 2 feet 2 inches, but I may use greater or shorter dimensions of electrodes in the direction of travel of the web, according to the result desired. Numeral 6 denotes comminuted material, as for instance, abrasive grains held in a hopper 9. The grain 6 is fed from the hopper by feed roll 11 driven by means, not shown, and deposited on endless belt 10. Numerals 12 represent idler rolls around which belt 10 is directed and driven continuously by roll 13 which is driven

by conventional means, not shown. Numeral 14 is a conducting connection connecting electrode 3 or electrode bank 3 to ground. Numeral 15 is a conducting connection connecting electrode or electrode bank 4 to ground. Numeral 16 is a conducting connection connecting electrode 6 or electrode bank 6 to a source of high potential of variable frequency and alternating polarity. Numeral 17 is a conducting lead connecting electrode 7 or electrode bank 7 to a source of high potential of variable frequency and alternating polarity or to a source of unidirectional high potential (direct current). The order of connections of electrodes may sometimes be reversed in that conducting lead 14 may be connected with a source of high potential of variable frequency, and connecting lead 16 may be grounded. Likewise, conducting lead 15 may sometimes be connected to a source of high potential of suitable characteristics, and connecting lead 17 may be grounded. The abrasive grains 8 are delivered from hopper 9 by feed roll 11 onto the endless belt 10 which is moved continuously into the electrostatic field set up between electrodes 3 and 6. The high potential alternating current applied to electrode 6 where electrode 3 is grounded or to electrode 3 where electrode 6 is grounded is of a variable number of cycles, depending upon the grit sizes and variation in grit sizes being separated and coated. The number of cycles is adjusted so as to lift only the smaller grains to the adhesively coated web, the larger grains being lifted a shorter distance and dropping and/or being pulled back to the carrier belt upon the reversal of polarity. I have discovered that a superior separation of the smaller and larger grains can be accomplished by adjusting the frequency in accordance with the size of grains that it is desired to coat in the field between electrodes 3 and 6. I generally prefer, especially in the case of fine grits, to use a voltage sufficient to lift all of the grains from the belt 10, as I believe effective separation is brought about because the smaller grains travel faster when lifted from the belt and, with the correct electrode spacing, reach the adhesively coated backing at a point of time at which the larger grains have traveled a shorter distance. By a proper selection of frequency the polarity of the field is reversed before the larger grains reach the adhesively coated backing. As stated above, the small grains are lifted to the adhesively coated web while the larger grains are lifted a shorter distance. The frequency of alterations of polarity of the field is so adjusted and controlled that the average displacement of the finer particles per electrical impulse is substantially greater than the average displacement of the larger particles. Of course, the average displacement of the larger particles is less than the free space distance between the electrodes 3 and 6, and, in fact, less than the distance between the felt 10 and the adhesively coated surface of web 1. Irrespective of the mechanism it has been found possible to coat the finer grains in oriented relationship and have the larger grains pass out of the field between electrodes 3 and 6 on the carrier belt 10. As the belt moves forward it carries the larger grains which are not coated in the field between electrodes 3 and 6 into the field between electrodes 4 and 7. Electrode 7 is connected to a source of high potential of variable frequency when electrode 4 is grounded or electrode 4 is connected to a source of high potential of variable frequency when electrode 7 is grounded. I impress upon electrode 7 or electrode 4, as the case may be, a lower frequency alternating current whereby, for a given electrode spacing, a longer time of travel is permitted so that larger particles reach the adhesively coated backing than was the case between electrodes 3 and 6. By suitably controlling the frequency of the field between electrodes 4 and 7 I may control the size of particles coated in this field. Often, however, it is desired to coat all or a large portion of the particles remaining on the belt in the field between electrodes 4 and 7. In this case I may use direct current instead of an alternating current in establishing this field or I may use an alternating current of relatively low frequency, as for instance, a frequency of 10 to 30 cycles or lower. A separation of the grain into larger and finer fractions may take place in the field between electrodes 7 and 6 or in both fields. In either case the average size of the grain coated depends upon the electrode spacing, the voltage, and the number of cycles.

The separation desired is not attained by the use of a simple pulsating direct current with a variable frequency of pulsation, since charges are not lost by the particles and the electrodes with sufficient rapidity, and a particle once charged and set in motion between the electrodes continues to travel even though the connection to the source of direct high potential is interrupted. Where alternating current is used the field is reversed, and a particle with a given charge and in motion is reversed in direction of travel with the reverse in polarity and I believe this to be the reason why better separations are attained with alternating current. Instead of using simple alternating current, a commutator may be used to reverse the polarity of the electrodes where they are energized with direct current but I prefer to use alternating current as it is simpler and very effective for my purpose.

The voltage impressed upon an electrode, the spacing between the electrodes and different banks of electrodes, the length of the electrodes along the direction of travel of the adhesively coated web, and the frequency of the alternating current used, are varied according to the grit size and the result that it is desired to attain.

In the prior art, abrasive grains have been coated to a sheet by passing the adhesively coated backing through an electrostatic field adjacent an upper electrode with the adhesive side facing downwardly and passing abrasive grains into the electrostatic field, often by means of a belt moved adjacent to the lower electrode in its passage through the field. In this and in other methods of the prior art, spacings, voltages and frequency of the current, where alternating current has been used to energize an electrode, have been such as are conducive to coating the adhesively coated web quickly and completely with a grade of abrasive grains which at least approaches the grade of the abrasive grain delivered to the electrostatic field. In actual practice, however, with direct current, either uninterrupted or interrupted, or with alternating current of relatively low frequency and an air gap which is often relatively small, the result has been that all of the abrasive grains are propelled to the adhesively coated backing sheet. Some grains are retained by the adhesives, others immediately return to the carrier belt and are again propelled to the adhesively coated backing and this process is continued as the web travels forward through the field between the electrodes. The weight of abrasive coated gradually increases due to repeated bom-

bardments as the web passes through the field. If the energizing current furnished to the electrode is cut off suddenly, the pieces of backing within and corresponding to the length of the field at the time the current is broken may be sampled and analyzed at any desired point within the coating field. It will be found that the grade of abrasive being coated as the web enters the field is usually at least substantially as coarse as the abrasive delivered to the field, and that the overall grade of abrasive decreases progressively as the weight of abrasive coated is built up from the beginning of the electrodes to the end of the electrodes in the direction of travel of the web. By computation of grades, it will be found that the last abrasive coated as the web leaves the field is very fine as compared with the grade of abrasive delivered to the field. I attribute this to the fact that as the abrasive weight coated builds up in the field the spaces between the grains become small and it is, therefore, easier to embed the fines between the grains already coated than the average size or coarser size of grains still remaining in the abrasive mixture. At any rate, in the prior art the result has been the embedding of fine grains between coarser grains toward the end of the coating operation in the electrostatic field. It should be understood that the presence of such very fine and ineffective grains between the more effective abrading grains is what we term "a fine top effect" in this application, a condition which is conducive to loading of the product by the work removed in abrading and which interferes with the efficiency of the product. It should be appreciated that a product built up according to the present invention avoids the difficulties of the prior art in that a substantial proportion of the fines content is coated onto the adhesively-coated backing at the beginning of the coating operation thereby removing these fines from the abrasive mixture—that they will not be embedded between the coarser and more effective grains in the later stage of the coating operation wherein I provide conditions conducive to coating coarser grains.

As an example of the use of the invention as illustrated in Figure 1, I may consider a coating carried out with grit No. 280 silicon carbide abrasive. The actual grading of the abrasive of this fine number is commonly determined by sedimentation. From the sedimentation results, an accumulation curve is plotted which shows the diameter of the grain in terms of microns versus the percentage of grain. It should be appreciated that grains of this fine size and finer sizes, and sometimes somewhat coarser sizes, are graded by air or water classification methods. The grading set forth, as determined by microns, is a statistical value, and the cleanliness of the grade can be determined by plotting a distribution curve. A clean grade is one having a high percentage at or near the nominal size and relatively free from substantially coarser or finer grades of grain. Where I speak of a flour grade being finer than another flour grade I mean that the average grain size of the finer grade is finer. Where I speak of a cleanly, well, evenly or uniformly graded material I mean that the material has a relatively steep distribution curve, shows a relatively high percentage of grain at or near the nominal size and is relatively free from grains much finer or much coarser than the nominal size. At the 50 percent point on the accumulation curve, the standard diameter for grit No. 280 silicon carbide is 44 microns. The abrasive delivered from the hopper 8 of Figure 1 in this coating had a diameter at the 50 percent point on the accumulation curve of 47 microns. This abrasive when coated by the regular method of upward propulsion, (i. e., electrostatic movement of particles counter-to-gravity), which does not involve the invention disclosed in this application to produce a coated abrasive article with an abrasive weight of 4.04 pounds per sandpaper ream, showed an overall grading at the 50 percent point on the accumulation curve of 44.5 microns. In the coating by the regular conventional method, the abrasive that first adhered to the sheet was coarser than that which later adhered to the sheet in the travel of the adhesively coated web between the electrodes. The abrasive which was coated onto the adhesively coated backing just before the coated web emerged from the electrodes was very fine, as was determined by stopping the machine and analyzing the grade of the abrasive at several points along the line of travel of the web through the field. For both the conventional coating and the novel method herein described, 40 pound rope paper was used as the web to be coated and the adhesive coated on the backing by conventional means to hold the grain consisted of a solution of an oil-modified alkyd resin composition in high flash naphtha, the solution containing about 65 percent of nonvolatile resinous material. In the control experiment the coating electrodes were energized with an alternating current of 25 cycles stepped up to 40,000 volts and the air gap between the belt carrying the abrasive and the upper electrodes was uniformly ½ inch.

In coating according to the present invention the apparatus shown in Figure 1 was used. The air gap between the upper bank of electrodes 3, which was grounded, and the belt 10 carrying the abrasive, was uniformly 1½ inches. The electrode bank 3 was energized by 60 cycle alternating current stepped up to 31,000 volts. It was desired to coat only a small portion, and the finer portion, of the abrasive grain of grit No. 280 on the belt 10 in the field set up between electrodes 3 and 6. The abrasive weight attained in the field between electrodes 3 and 6 was 1.23 pounds per sandpaper ream and the grading of the abrasive coated at the 50 percent point on the accumulation curve was 37.5 microns. The adhesively coated web was 36½ inches wide and was moved through the field, adhesive side facing downwardly, at a speed of 102 feet per minute. The feed roll 11 delivered to the carrier belt 10, in a continuous manner, 5.4 pounds of abrasive per minute. The belt 10 was moved through the field at a rate of 7½ feet per minute. The layer of abrasive on belt 10 was 38 inches wide. The coarser abrasive not coated in the field between electrodes 3 and 6 was allowed to dump from the belt at the point of roll 12 and was collected for re-use. In the coating operation described the coated abrasive formed was finer in grade and more uniform in grade than the abrasive fed to the belt 10. Also, the grains were coated in oriented relation.

In the form of apparatus shown in Figure 1, there is for a single setting, a constant air gap at all points between electrode bank 3 and the carrier belt 10. In practicing the invention with this form of apparatus, the same or a different spacing or air gap may be provided between electrodes 4 and 7. In the form of apparatus shown in Figure 2 there is, as shown in the figure, a gradual decrease in the air gap from the begin-

ning of electrodes 3 and 6 to the end of electrodes 4 and 7. For certain purposes there is an advantage in the form of apparatus shown in Figure 2, in that a wider gap, conducive to good separation, may be used for the first bank of electrodes and a narrower gap, conducive to complete coating of all the grain, may be provided in a second bank of electrodes, 4 and 7. A variety of arrangements will occur to those skilled in the art. The distance between the electrode banks 3 and 6 and electrode banks 4 and 7 is not critical so long as the two banks of electrodes are not so close to each other than there is an interference between the two fields. In general I find a spacing of about 7½ inches very satisfactory.

As a further illustration of the use of my invention I may describe the coating of grade No. 240-A waterproof sandpaper. In this instance the form of apparatus shown in Figure 2 was used. The air gap between electrode bank 3 and the abrasive-carrying belt 10 at the point where the belt first enters the field was 1¼ inches. The spacing between the two pairs of electrodes was 7½ inches. The electrode banks 3 and 6 were made up of six electrodes with a dimension in the direction of travel of the adhesively coated web of 6½ inches each (including insulation). The second bank of electrodes was made up of only one electrode with a dimension of 6½ inches (including insulation) in the direction of travel of the adhesively coated web. The air gap at the end of the electrodes 4 and 7 where the carrier belt 10 emerges from the field was ⅝ inch. As an adhesive, a 71 percent solution of oil-modified alkyd resin composition dissolved in high flash naphtha was coated onto the web by conventional means, not shown. The web was 40 pound rope paper previously treated by conventional means to fill the pores and waterproof the web. The web was 36½ inches wide. A layer of No. 240 silicon carbide abrasive, 38 inches wide, was fed onto abrasive-carrier belt 10 at the rate of 6.95 pounds per minute from hopper 9 by feed roll 11, as shown in Figure 2. In the coating operation the web 1 was moved through the field with the adhesively coated side facing downwardly, by conventional means, not shown, at a rate of 102 feet per minute. The abrasive-carrier belt 10 moved at a speed of 7½ feet per minute. The abrasive grain fed had a grading of 59.5 microns at the 50 percent point on the accumulation curve. Electrode bank 6 was energized by an alternating current of 60 cycles at 24,000 volts. Electrode 7 was energized by an alternating current of 15 cycles at 40,000 volts. Between the electrodes 3 and 6 an abrasive weight of 2.35 pounds per sandpaper ream was coated. At the 50 percent point on the accumulation curve the abrasive so coated graded 46 microns. Between electrodes 4 and 7, 3.25 pounds per sandpaper ream of abrasive was coated, giving a total weight of coated abrasive of 5.6 pounds. The grading for the total abrasive weight applied was, at the 50 percent point on the accumulation curve, 56.5 microns. The abrasive applied in the first bank of electrodes was, therefore, 10.5 microns finer than the overall grading of the abrasive applied to the sheet. From this it is evident that that part of the abrasive, coated between electrodes 4 and 7, was much coarser than that coated between electrodes 3 and 6. In coating with both electrode banks a total of 76 percent of the abrasive delivered to the carrier belt 10 was coated and 24 percent of the abrasive fed was dropped off the belt and recovered for re-use as the belt passed over roll 13. The 24 percent of grain recovered at roll 13 was suitable for use in making a coarser grade of coated abrasive. The abrasively coated web 1 was passed by conventional means, not shown, from the abrasive-applying means of Figure 2, to a conventional drying chamber, in which the coated goods were heated to cure the resinous binder. An excellent coated abrasive was produced in which the top of the abrasive coating was remarkably free from fines which in the prior art caused poorer abrading action and a tendency of the abrading device to load with material being removed from the object being abraded. The abrasive grains in the coating were well oriented.

As a still further illustration of the use of my invention I may describe the coating of grade No. 220-A waterproof sandpaper. Grade No. 220 is a grade controlled by screens and not by sedimentation. In this instance the form of apparatus shown in Figure 2 was used. The air gap between the electrode bank 3 and the abrasive-carrying belt 10 at the point where the belt first enters the field between electrodes 3 and 6 was 1¼ inches. The spacing between the two banks of electrodes was 7½ inches. The electrode banks 3 and 6 were made up of six electrodes each with a dimension in the direction of travel of the adhesively coated web of 6½ inches (including insulation). The second bank of electrodes, 4 and 7, was made up of two electrodes with a dimension of 6½ inches each (including insulation) in the direction of travel of the adhesively coated web. The air gap at the end of the electrodes 4 and 7 where the carrier belt emerges from the field was ⅝ inch. As an adhesive a 74 percent solution of oil-modified alkyd resin composition, dissolved in high flash naphtha was coated onto the web by conventional means, not shown. The web was 40 pound rope paper previously treated by conventional means to fill the pores and waterproof the web. The web was 36½ inches wide. A layer of No. 220 silicon carbide abrasive, 38 inches wide, was fed onto the abrasive carrier belt 10 at the rate of 7.45 pounds per minute from hopper 9 by feed roll 11, as shown in Figure 2. Adhesively coated web 1 was moved through the field by conventional means, not shown, at 102 feet per minute, while the abrasive-carrying belt 10 moved at a speed of 7.5 feet per minute.

The abrasive grain fed had a fines content as determined by the use of a Number 325 standard silk screen of 46.6 percent. Electrode bank 6 was energized by an alternating current of 60 cycles at 24,500 volts. Electrode bank 7 was energized by an alternating current of 15 cycles at 30,000 volts. Between the electrodes 3 and 6 a sand weight of 3.4 pounds per sandpaper ream was coated. Grain so coated showed a fines content of 56.9 percent as determined by a number 325 standard silk screen. Between electrodes 4 and 7, 3.1 pounds of abrasive were coated to give a total abrasive weight on the coated sheet of 6.5 pounds per sandpaper ream. The fines content of the total abrasive weight so applied was 50.7 percent as determined by the number 325 standard silk screen. The abrasive applied in the first bank of electrodes, therefore, contained 8.1 percent more fines than the average of the abrasive coated in both abrasive-applying operations. The abrasive coated in the second operation between electrodes 4 and 7 was, therefore, decidedly coarser and freer from fines, as could be readily detected in the appearance of the coat-

ed product as compared with a product coated by conventional counter-to-gravity electrostatic means with the same abrasive to the same abrasive weight. In coating with both pairs of electrode banks, a total of 82.5 percent of the abrasive delivered to the carrier belt 10 was coated and 17.5 percent of the abrasive fed was dropped off the belt and recovered for re-use as the belt passed over roll 15. The 17.5 percent of grain recovered was suitable for use in making a coarser grade of coated abrasive.

In a manner analogous to which No. 240-A waterproof sandpaper was made with grade No. 240 silicon carbide, I will describe a coating in which No. 320-A waterproof sandpaper was made. In this case conditions were similar to the manufacture of No. 240-A waterproof sandpaper, except that a current of 120 cycles at 29,400 volts was used to energize electrode bank 6 and a current of 25 cycles at 36,000 volts was used to energize electrode bank 7. The air gap between electrode bank 5, in this case made up of three electrodes with a dimention 6½ inches each, in the direction of travel of web 1, and carrier belt 10 at the point where carrier belt 10 enters the field was 1⅛ inches. The air gap between the carrier belt 10 and the electrode bank 4 in this case made up of two electrodes having a dimension of 6½ inches each in the direction of travel of web 1 at the point where carrier belt 10 emerges from the field, was ⅛ inch. As in previous instances, the abrasive coated on the bottom between electrodes 5 and 6 was much finer than the abrasive coated between electrodes 4 and 7 and the top coating of abrasive grains was very free from fines and therefore more effective as an abrading instrument. The coated grains were well oriented.

No specific rules can be given for electrode spacings, frequency, and voltage, for every condition that will be encountered. In general, however, electrode spacings in excess of 2 or 3 inches are not preferred since excessive voltages would be required and since, for some reason unknown to me, electrostatic action is more practical at smaller electrode spacings. In general with the finer grits and a well covered carrier belt a voltage should be used which is high enough to readily lift the abrasive grains from the carrier belt and which is not high enough to cause arcing between the electrodes. The frequency of the alternating current used to make the separation in the coating operation in the step where the finer abrasive is removed from the abrasive mixture fed to the field varies with the grit size and the electrode spacing. Generally speaking, the wider the air gap the lower the frequency that can be used to make the separation, and the finer the grain the higher the frequency desired to make a satisfactory separation. I select a practical air gap spacing and voltage and then use that frequency most effective for obtaining the desired results of selectively removing a finer grade of abrasive from the coarser and variable grade delivered to the field. I then use conventional voltages, electrode spacings, or air gaps and a direct current, either uninterrupted or interrupted, or a suitable frequency of alternating current for coating additional abrasive as required for the results desired in the second abrasive-applying step, where such second step is employed, as for instance, between electrodes 4 and 7 of Figure 1 and 2.

Figure 3 illustrates another form of my invention and differs from the forms shown in Figures 1 and 2 in that in this form of the apparatus the finer abrasive removed from the abrasive mixture fed to the device shown in Figure 3 is not permanently coated onto a reinforcing backing but is, on the contrary, removed after separation and collected for subsequent use as desired. In Figure 3, numerals 2a represent idler rolls over which an endless belt 26 is trained, belt 26 being made of paper, cloth, or other suitable material. Idler roll 2b is driven by conventional means, not shown, at any desired speed. Numerals 3, 5, 6, 8, 9, 11, 14 and 16 denote parts which may be identical with parts denoted by similar numerals in Figures 1 and 2 and already described. Numeral 16a represents an endless belt which may be made of cloth or other suitable material. The belt 16a is trained about idler rolls 12a and a power driven roll 13a which is driven by conventional means, not shown, at any desired speed. Numeral 18 denotes a suitable receptacle in which the abrasive or other comminuted material dumped from belt 16a at roll 13a may be recovered. Numeral 19 represents a receptable or chamber in which the abrasive or other comminuted material removed from belt 26 may be recovered. Numeral 20 represents a heater which may be used to evaporate liquid applied to belt 26. Numeral 21 represents a rattler or beater which is driven by conventional means, not shown, and aids in the removal of abrasive or other comminuted material from belt 26 so that it may be recovered in receptacle 19. Numeral 22 designates a rotating brush driven by conventional means, not shown, to remove the abrasive or other comminuted material, if required, and as desired, from endless belt 26, so that it may be recovered in receptacle 19. Numerals 23 denote conventional coating rolls driven by conventional means, not shown, which may be used to apply a liquid coating material to the endless belt 26. Numeral 24 represents a coating trough in which the liquid to be coated to roll 26 is placed so as to contact lower coating roll 23. Numeral 25 denotes the liquid which is placed in coating trough 24. In some instances, especially in the case of very fine grits, water will be found effective. In other cases, a small quantity of a surface tension-lowering agent, such as sulphonated vegetable oil, sulphonated higher alcohol or other suitable surface tension-lowering agent is added to the water and used. In still other cases a small quantity of soluble and usually mild adhesive, such as starch in solution, is used. In lieu of water, other volatile liquids or solvents may be used. The form of the invention shown in Figure 3 is particularly useful as an abrasive-separating mechanism. Furthermore, it is particularly useful in separating the so-called flour grades or grades within the range of No. 240 and finer. The abrasive which it is desired to separate, which may be a mixture of different sizes of silicon carbide, aluminum oxide, or other abrasive, preferably containing particles of the size normally found in grades 240 and/or finer, is delivered from hopper 9 by speed roll 11 onto carrier belt 16a which is driven by roll 13a at any desired speed, as for instance, 7 to 10 feet per minute, through the electrostatic field set up between electrodes 3 and 5, the rate of feed being governed by the results that it is desired to attain, as previously described in instances where it was desired to permanently coat the finer fracture of grain removed from the abrasive mixture. The endless belt 26 is coated with water or other suitable

material, usually with little or mild adhesive action in the liquid state, by coating roll 23 dipping in the coating liquid 25 in trough 24, as the endless belt 26 is moved in the direction of the arrow around idler rolls 2a by power driven roll 2b at a suitable speed, as for instance, 85 to 125 feet, although other speeds will often be found satisfactory. Electrode bank 3 or electrode bank 8 is grounded and the opposing electrode is energized by an alternating current, the frequency of which is controlled according to the results desired. I have found a frequency of 60 cycles quite effective for grit sizes of the order of No. 220, No. 240 and No. 280, provided the correct voltage is used and the correct air gap is employed. As a rule a suitable air gap for grades of this size will be about 1 to 1½ inches. By this I mean the air gap between belt 16a in Figure 3 and electrode bank 3. The air gap may be the same at the point where the belt 16a enters the field as where the belt leaves the field or the gap may be varied, that is, electrode banks 3 and 8 may be parallel or at a slight angle to each other in accordance with the results desired. Likewise, I may vary the length of the electrodes in the direction of travel of the endless web 26 and the endless belt 16a. Generally speaking, the longer the electrodes the greater the quantity of abrasive that will be removed from the mixture of abrasive or other comminuted material delivered to belt 16a. In operating with grades of this size range, I prefer to use a voltage that will lift all or most of the grains from the abrasive-carrying belt in the field between electrodes 3 and 8.

Where it is desired to separate grain sizes containing a considerable proportion of grains of still smaller size, that is, sizes smaller than the range 220, 240 and 280, I prefer to use still higher frequencies both for those forms of the invention in which the finer grains separated are permanently coated as in Figures 1 and 2 and in those cases where the finer grain is removed from the field and collected for a subsequent use as is illustrated in Figure 3. For instance, for separating the finer grains in a mixture of grains of the order of magnitude of sizes 320, 360, 400 and still finer, I may use frequencies between 60 and 180 cycles, as for instance, 120 cycles, as has already been used in illustrating the coating of grade 320 by means of the form of apparatus shown in Figure 2. Generally speaking, the conditions depend upon the nature and size of the particles in the mixture being separated, and for a given material substantially the same conditions will be found to operate where the finer grain is permanently coated as in Figures 1 and 2, and where the grain is only temporarily coated or otherwise removed from the field and collected for subsequent use as illustrated in Figure 3.

In the coarser grades, separation into different sizes is usually readily accomplished by means of screens but in some instances the present invention is useful in handling coarser comminuted material, such as the coarser grades of abrasive. Where a coarser abrasive mixture is separated by means of the present invention, a lower frequency may be used on the separating electrodes as for instance, electrodes 3 and 8 in Figures 1, 2 and 3. It should be appreciated that the controlling factor in selecting the correct frequency is that I select a frequency which permits the lifting of the finer portion of the mixture to the adhesively coated backing counter-to-gravity or in a direction with a component counter-to-gravity, an angle too vertical often being conducive to ease of operation of the equipment, and a frequency which also insures a reversal of polarity before the larger grains reach the adhesively coated backing, or other means of removing the finer material from the field.

In general the preferred operation of my process with fine grits presupposes that a definite layer of fine grits will be fed into the field on a carrier belt, as for instance, belt 16, or belt 16a, and that substantially all of the grains will be lifted from the belt during the separating operation. Where relatively coarse material is being handled, it sometimes may be preferred to coat the belt sparsely with grain and lift only the finer grains from the belt. This can be accomplished by correct adjustment of frequency, air gap and voltage. Considering solely the voltage, it should be understood that the voltage required is not always proportional to the grit sizes. For instance, there is a certain grit size, for example, of silicon carbide, that requires a higher voltage than either a smaller or larger particle to insure lifting of the particle. Considering the coarse grits, for example, of silicon carbide, that is, grits coarser than about 180, a higher voltage is required to lift the larger grains than the smaller grains in this same range. However, it frequently happens, and in fact, it is generally true, that a higher voltage is required to lift grit 280, for example, silicon carbide, than is required to lift grit 180 or 120. In other words, there is a minimum voltage requirement in size in the neighborhood of grit 180 and the voltage required to lift the particles rises on the coarse side of this point as the grit size increases and rises on the finer side of this point as the grit size decreases. This condition, however, does not nullify the basis of this invention which succeeds in separating fine abrasives even though a higher voltage may be required to lift the smaller particles, since in this grit range all particles are set in motion but the finer particles once in motion travel faster after leaving the abrasive carrier belt, for example, and the coarser particles are prevented from reaching the adhesively coated web or other collecting means by a reversal in polarity at the selected frequency.

Referring to Figure 4 which illustrates diagrammatically a set-up for obtaining any desired frequency of pulsation of alternating current and any desired potential from an electrode used in my coating process, 30 is a variable speed motor connected through suitable connecting means 31 to an alternating current variable frequency generator 32. Suitable motors, connections and generators are well known in the art. The alternating current generated in generator 32 is fed through conductors 34 and 35 to the primary winding 33 of a transformer. In conductor 35 between the motor generator and the primary winding 33 of the transformer is located a rheostat 36 for varying the voltage. The transformer may be of any desired type, but for purposes of illustration, I use a core type transformer. At 37 is shown a ground for the secondary winding 38 of the transformer, the secondary winding 38 of the transformer being connected to a suitable conductor 39 which leads to a suitable terminal A± which may be one of the electrodes indicated as connected to a high tension bus in Figures 1, 2 and 3 or may be a terminal which is in turn connected to one of the aforesaid elec-

[fol. 622]

trodes. By such adjustments as are known in the art, the variable speed motor 30, the generator 32, the transformer windings 33 and 38 and the rheostat 36 may be controlled to obtain any desired frequency and potential at the terminal A±.

Electricity of characteristics suitable for carrying out my invention is readily supplied by apparatus of the type illustrated in Figure 4. This type of apparatus supplies electricity of characteristics well adapted for use in energizing electrode 6 of Figure 1, electrode 6 of Figure 2 and electrode 6 of Figure 3. The same type of apparatus may be used to supply alternating current, usually of lower frequency, to electrode 7 of Figure 1 or electrode 7 of Figure 2, where alternating current is used to energize electrode 7 of Figure 1 or of Figure 2. It is to be understood that the electrostatic separations carried out as illustrated in Figure 1 between electrodes 3 and 6, in Figure 2 between electrodes 3 and 6 and in Figure 3 between electrodes 3 and 6 are analogous. The fundamental difference is that where the apparatus is used for permanently coating to a reinforcing backing the finer portion of comminuted material, separated from the comminuted material of variable size, a relatively strong adhesive is applied to the reinforcing backing 1 of Figures 1 and 2, whereas, when it is desired to recover for subsequent use as such, the finer portion of comminuted material separated from the comminuted material of variable size, as between electrodes 3 and 6, in Figure 3, a liquid such as water or a mild adhesive is used to temporarily anchor the finer portion of comminuted material to the endless belt or carrier 26 so that the finer portion of material may be collected as illustrated in Figure 3 in receptacle 19 for further use as such. Recovery of the finer portion of material removed from the field by carrier 26 is facilitated by the heater 28 of Figure 3 which evaporates some or all of the liquid used to wet and adhere the grains temporarily to the carrier 26 or evaporates the volatile portion of the mild adhesive coated to carrier 26, so that the temporarily adhered grains may be more readily removed from the web by beater or rattler 21, and/or revolving brush 22.

It will thus be seen that there has been provided by this invention, methods and apparatus suitable for coating a controlled grade of comminuted matter such as abrasive grains to an adhesively coated backing, for separating comminuted material such as abrasive grain into two or more portions, one of which is of finer grade than the other portion, and for combining the steps of separating or grading comminuted material, such as abrasives, with the coating of the same to an adhesively coated backing, in a single operation. There has thus been provided by this invention, methods and apparatus in which the various objects hereinbefore set forth, together with many thorough practical advantages, are successfully achieved. As various possible embodiments might be made of the mechanical features of the above invention, and as the art herein described might be varied in various parts, all without departing from the scope of the invention, it is to be understood that all matter hereinbefore set forth is to be interpreted as illustrative and not in a limiting sense.

I claim:

1. A process of separating finer sized particles from comminuted material having particles of different sizes therein, comprising establishing an electrostatic field of alternating polarity, passing said comminuted material through said field, adjusting the frequency of alternations of the polarity of said field to separate from the comminuted material in the field only the finer sized particles of comminuted material, removing the finer sized particles so separated from said field, and collecting separately from the finer sized particles so removed, the coarser particles of comminuted material.

2. A process of separating finer sized particles and coarser sized particles from comminuted material having particles of different sizes therein, comprising establishing an electrostatic field of alternating polarity, simultaneously passing through said field separate means for removing therefrom the finer sized particles and the coarser sized particles, adjusting the frequency of alternations of the polarity of said field to separate from the comminuted material introduced into the field and to deposit upon the first-mentioned particle removing means only the finer sized particles, thereby removing the finer sized particles from the field, and separately removing on the second-mentioned particle removing means the coarser portion of said comminuted material.

3. In a process of coating a reinforcing backing with an abrasive material, the steps comprising passing an adhesively coated web through an electrostatic field of alternating polarity of controlled frequency adjacent an upper electrode of said field and with the adhesively coated side facing downwardly, passing abrasive grains of variable size through said electrostatic field adjacent the lower electrode, adjusting the frequency of alternation of the polarity of said field so that a finer portion only of said abrasive material is propelled to and embedded in said adhesive in oriented relation whereby the abrasive coating applied to said adhesively coated web is of a substantially finer grade than the abrasive grain delivered to said field and whereby a coarser abrasive grain with less variation in size is prepared for other abrasive use.

4. A process of coating a reinforcing backing with an abrasive material comprising passing an adhesively coated web through an electrostatic field of alternating polarity of controlled frequency adjacent an upper electrode of said field and with the adhesively coated side facing downwardly, passing abrasive grains of variable size through said electrostatic field adjacent a lower electrode, adjusting the frequency of alternation of the polarity of said field so that a partial coating of a finer portion only of said abrasive material is propelled to and embedded in said adhesive in oriented relation, passing said web so coated through a second electrostatic field adjacent an upper electrode of said second field, passing the abrasive grains not coated in the first electrostatic field into the second electrostatic field adjacent the lower electrode, and creating electrostatic forces in said second electrostatic field to cause a coarser portion of abrasive to be propelled to and embedded in said adhesive whereby the final composite abrasive coating applied to said adhesively coated web is relatively free from fine grains that have been embedded between the exposed portions of the coarser grains, and drying said coated web to set the adhesive and fix the abrasive grains to the backing.

5. A process of coating a reinforcing backing with abrasive material comprising passing an ad-

heavily coated web through an electrostatic field with the adhesively coated side facing abrasive supplied to said field, passing abrasive grains containing a substantial proportion of grains finer than the coarser portion of said grains through said electrostatic field and electrically propelling a partial coating of only a finer portion of said abrasive onto said adhesively coated backing in said field, passing said adhesively coated backing so partially coated with abrasive grains, while the adhesive is still in a condition to receive additional grains, through a second electrostatic field, supplying to said second electrostatic field coarser abrasive grains relatively free from grains of the size of grains coated in the first electrostatic field, and electrically applying an additional portion of a coarser size of abrasive to said previously partially coated backing, in said second electrostatic field, and setting the adhesive on the web so coated to hold the abrasive grains in place.

6. A combined process of grading abrasives and coating abrasives onto a reinforcing backing comprising passing an adhesively coated web through an electrostatic field with the adhesively coated side facing downwardly and adjacent an upper electrode, passing abrasive grains of suitable but variable size through said field; adjusting the electrode spacing, the voltage and the frequency of the alternating current used to energize an electrode of said field in accordance with the grade and quantity of abrasive that it is desired to coat on the backing in said electrostatic field and thereby propelling a controlled coating of abrasive grains into said adhesive on said web, removing the web so coated with adhesive and abrasive from said field and setting the adhesive, and collecting the uncoated abrasive grains, which pass through said field and are of a different grade from those coated for subsequent abrasive use.

7. A process of coating abrasives onto a reinforcing backing, comprising providing at least one electrostatic field adapted to coat a finer grade of abrasive and at least one electrostatic field adapted to coat a coarser grade of abrasive, passing an adhesively coated backing through the first-mentioned electrostatic field and then through the second-mentioned electrostatic field, passing abrasive grains having finer and coarser grades therein first through the first-mentioned field and then through the second-mentioned field and coating on the adhesively coated side of the backing by electrostatic means, thereby, at least one finer portion of abrasive grains and thereafter at least one coarser portion of abrasive grains whereby a composite abrasive coating is built up on the backing which is relatively free from finer grains that have been embedded between the exposed portion of the coarser grains, and then setting the adhesive to anchor the grains to the backing.

8. A process of grading comminuted material such as abrasive grains having finer and coarser portions intermixed therein, comprising establishing between spaced electrodes, an electrostatic field of alternating polarity of controlled frequency with the direction of force of said field having a component parallel to the force of gravity, conducting through said field separate means for removing therefrom, at least one finer graded portion of comminuted material introduced into the field and at least one coarser graded portion of such comminuted material, adjusting the voltage, the electrode spacing and the frequency of alternations of the polarity of said field in accordance with the grade and quantity of material to be separated as the finer graded portion of the material, and thereby moving a finer graded portion of the material to the first-mentioned material-removing means for removal therewith from said field, and removing on the second-mentioned material-removing means the coarser graded portion of the material not so separated by the electrostatic field, whereby the comminuted material fed to the electrostatic field is separated into at least one finer graded portion and at least one coarser graded portion.

9. A process of manufacturing coated abrasives, comprising providing between spaced electrodes, an electrostatic field of alternating polarity of controlled frequency, the direction of force of said field having a component parallel to the force of gravity, passing an adhesively coated foundation material through the said electrostatic field adjacent an upper electrode of said field with the adhesively coated side facing downwardly, feeding abrasive grains of variable size through said field below said adhesively coated foundation material and adjacent a lower electrode, adjusting the voltage, the electrode spacing and the frequency of the alternation of the polarity of said field in accordance with the grade and quantity of material that it is desired to deposit electrostatically upon said adhesive, and depositing thereby a controlled weight of a controlled grade of abrasive onto said adhesively coated side of said foundation material, removing the residual uncoated abrasive from said field and setting the adhesive to anchor the coated abrasive grains to the said foundation material.

10. Apparatus for coating comminuted material, such as abrasive grains onto an adhesively coated backing, comprising at least two pairs of electrodes, each pair of electrodes being spaced for the establishment of an electrostatic field therebetween which has a component of force parallel to the force of gravity, means for passing an adhesively coated backing in sequence through the first and second pairs of electrodes adjacent an upper electrode in each pair of electrodes, means for establishing an electrostatic field of alternating polarity between said first pair of electrodes, means for controlling the frequency of alternation of said field of alternating polarity and whereby a predominantly finer grade of comminuted material may be propelled to the adhesively coated side of said adhesively coated backing between the first pair of electrodes, means for establishing an electrostatic field between the second pair of electrodes such that a coarser grade of comminuted material may be coated electrically, and means for feeding comminuted material of variable size in sequence through the first pair of electrodes and then through the second pair of electrodes.

11. Apparatus for coating comminuted material, such as abrasive grains onto an adhesively coated backing comprising at least two pairs of electrodes, each pair of electrodes being spaced for the establishment of an electrostatic field therebetween which has a component of force parallel to the force of gravity, the electrode spacings gradually decreasing from a maximum at the beginning of the first pair of electrodes to a minimum at the end of the second pair of electrodes, means for passing an adhesively coated backing in sequence through the first and second pairs of electrodes adjacent an upper elec-

[fol. 624]

trode in each pair of electrodes, means for establishing an electrostatic field of alternating polarity between said first pair of electrodes, means for controlling the frequency of alternation of said field of alternating polarity and whereby a predominantly finer grade of comminuted material may be propelled to the adhesively coated side of said adhesively coated backing between the first pair of electrodes, means for establishing an electrostatic field between the second pair of electrodes such that a coarser grade of comminuted material may be electrically coated, and means for feeding comminuted material of variable size in sequence through the first pair of electrodes and then through the second pair of electrodes.

12. A process of separating comminuted material having particles of different sizes therein into finer and coarser portions comprising establishing an electrostatic field of alternating polarity between spaced electrodes having free space for motion of particles between the electrodes, passing said comminuted material into said field, controlling the frequency of alternations of polarity of said field so that the average displacement of the finer particles per electrical impulse is substantially greater than the average displacement of the larger particles per electrical impulse and so that the average displacement of the larger particles per electrical impulse is substantially less than the free space distance between the electrodes, and whereby there is created in the field and adjacent one electrode, a zone containing a finer portion of comminuted material and relatively free from the coarser portions of comminuted material, removing the finer portion of comminuted material from this zone and collecting it for a subsequent use, and separately removing the coarser portion of comminuted material and collecting it for a separate subsequent use.

NICHOLAS E. OGLESBY.

[fol. 625]

May 22, 1945. R. P. CARLTON 2,376,342

MANUFACTURE OF ABRASIVES

Original Filed Jan. 20, 1930 5 Sheets-Sheet 1

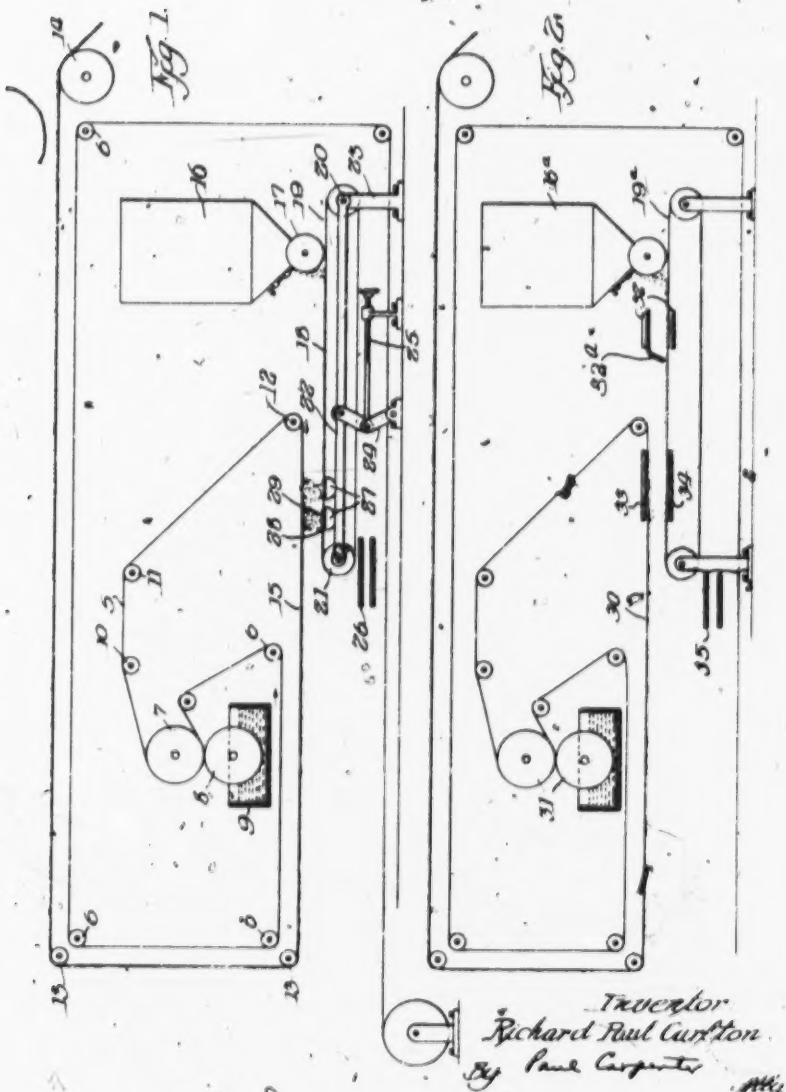

[fol. 626]

May 22, 1945. R. P. CARLTON 2,376,342

MANUFACTURE OF ABRASIVES

Original Filed Jan. 20, 1930 5 Sheets-Sheet 2

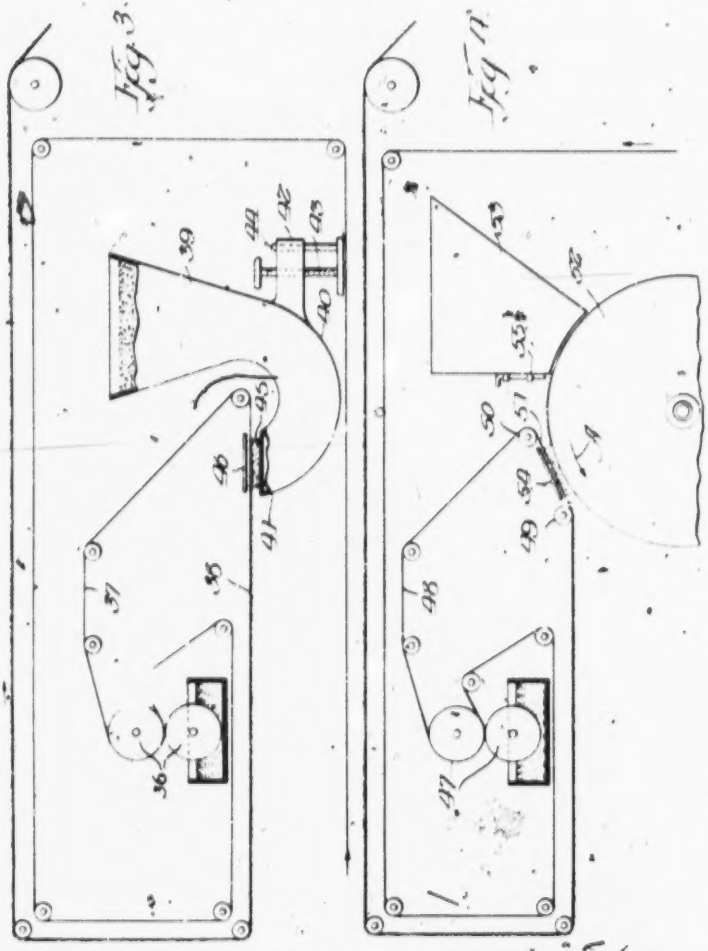

Inventor
Richard Paul Carlton
By Paul Carpenter
Atty.

[fol. 627]

May 22, 1945. R. P. CARLTON 2,376,342

MANUFACTURE OF ABRASIVES

Original Filed Jan. 20, 1930 5 Sheets-Sheet 3

Fig. 5

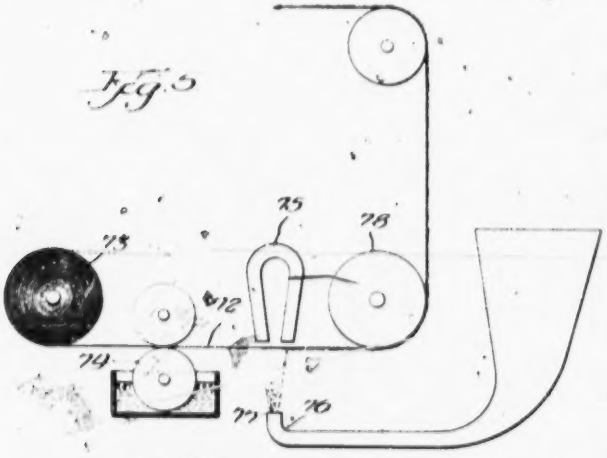

Fig. 6

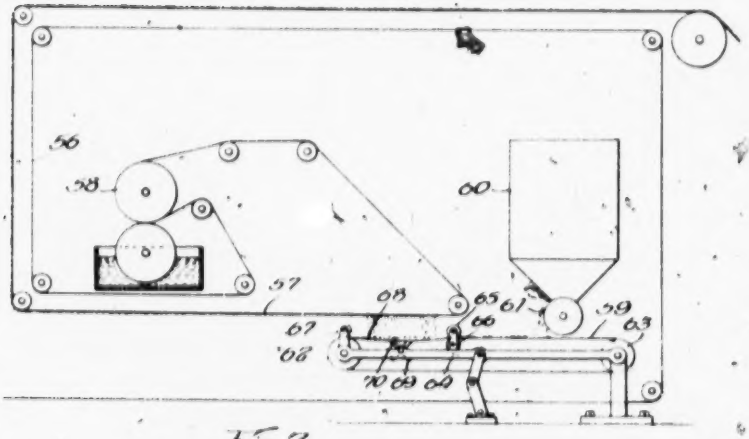

Fig. 7

Inventor
Richard Paul Carlton
By Paul Carpenter
Atty

[fol. 628]

May 22, 1945. R. P. CARLTON 2,376,342

MANUFACTURE OF ABRASIVES

Original Filed Jan. 20, 1930 5 Sheets-Sheet 4

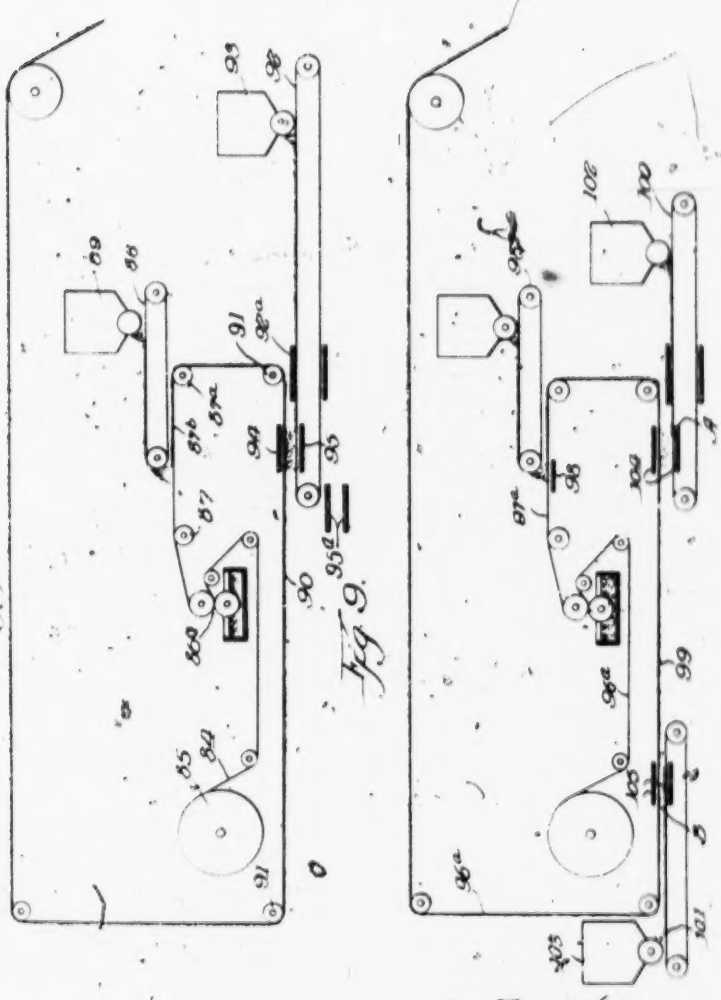

Fig. 9.

Inventor
Richard Paul Carlton
By Paul Carpenter Atty

[fol. 629]

May 22, 1945. R. P. CARLTON 2,376,342

MANUFACTURE OF ABRASIVES

Original Filed Jan. 20, 1939 5 Sheets-Sheet 5

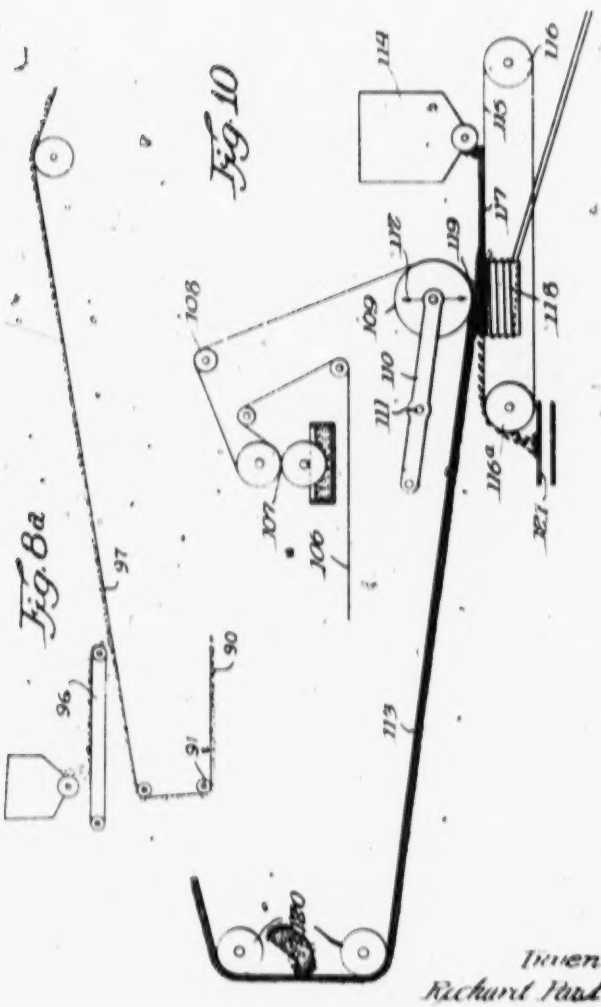

Inventor
Richard Paul Carlton
By Paul Carpenter
Atty.

[fol. 630]

Patented May 22, 1945

2,376,342

UNITED STATES PATENT OFFICE

2,376,342

MANUFACTURE OF ABRASIVES

Richard Paul Carlton, St. Paul, Minn., assignor to Minnesota Mining & Manufacturing Company, St. Paul, Minn., a corporation of Delaware

Original application January 28, 1930, Serial No. 422,065. Divided and this application July 8, 1941, Serial No. 401,484

8 Claims. (Cl. 117—17)

This invention relates in general to coated articles and to the art of coating, and more particularly to an improved method of and apparatus for applying pulverulent coatings to suitably adhesively coated surfaces, and while the invention finds particular utility in the art of making flexible abrasives, and is, therefore, described and illustrated for this purpose, it finds a wide field of utility for analogous purposes.

This application is a division of my copending application Serial Number 422,065, filed January 20, 1930, now Patent No. 2,318,570, granted May 4, 1943.

It is well known that in the art of making sandpaper, emery paper or cloth and similar abrasive articles, a flexible or in some cases, a rigid, backing of paper, cloth, wood or the like is employed, to which is applied a coating of an adhesive substance, such as animal or vegetable glue, or where a waterproof article is desired, the backing may be coated with any of the now well known waterproof adhesives of the Okie Patents 1,585,027, 1,585,028, of December 8, 1925, or 1,581,837 of April 20, 1926, for this purpose, and while the coating is still wet or unset, a suitable abrasive material such as garnet, corundum, sand or the like is applied thereto. The grains of abrasive substance are usually applied by gravity upon the upper adhesive coated surface of the backing, and they lie in the adhesive material in haphazard fashion due to the elongated nature of the abrasive particles, and in a large degree, the facets or cuttings edges of the individual grains or grits often lie flat upon or are embedded in the adhesive coating in such a manner that in some instances their best cutting edges never come into contact with the work or at best are brought inefficiently into contact therewith. The invention here has as one of its objects to measurably increase the number of grits whose longer or greater dimensions are in a plane perpendicular to the surface of the backing, thereby to present more efficiently the cutting edges to the work, and increase the cutting ability and life of the abrasive article.

It will be understood that in ordinarily depositing mineral, that is, pulverulent abrasive material solely under the force of gravity onto a backing, it acquires a velocity due to the action of gravity. As the grits pass through the intervening air space, there will be caused some change in their positions en route to the sheet or backing, but ordinarily neither the velocity given to the grits or the effect of the air on them is sufficient to cause them to become aligned so as to assume positions substantially perpendicular to the backing. It is, therefore, necessary that independent force be applied to the grits, and I have found that by passing the grits through a static field of electric energy or of electro-magnetic energy or by mechanically imparting this force to the grits a much greater number of the individual particles will assume erect positions on the backing, which will enhance its cutting ability. As will later appear, my invention, in its several forms, is capable of application for operation in conjunction with gravity methods of applying the grit, inasmuch as under certain conditions, and for some purposes, it is desirable to employ both gravity and one of the forms of my invention in conjunction in order to attain a desired form of abrasive article.

In carrying out this invention, I find it desirable to employ a conveyor for conducting the mineral at rest relative to the conveyor by relatively slow speed to a point adjacent to which the independent force is applied for projecting the particles of grit onto the backing. I find that by then applying this independent force, be it mechanical or electrostatic or electro-magnetic, I am able to impart a high velocity to the particle so that any force of gravity acting on the particle, whether in the same direction, in a counter direction, or in a direction angularly to that at which the force is applied, will be relatively small compared to this force applied. It is possible with the present invention to apply the force directly counter to gravity, that is, by bringing the grits beneath the backing or by applying the force in some other direction as long as the force of gravity and the effect of air is reduced below a point which will interfere with the result desired, namely, the projection of the grits with their longitudinal dimensions ultimately perpendicular or substantially so with respect to the backing.

The principal objects and advantages of this invention reside in the provision of an improved abrasive coated article, such, for example, as sandpaper, emery cloth, or the like, wherein the abrasive grits or grains lie in position on the backing for increasing the cutting effect and durability of the abrasive article; the provision of an improved abrasive article wherein the abrasive grits are disposed so that their cutting facets are presented in position to more efficiently engage the work and thereby produce a sharper article; the provision of an improved abrasive article wherein the abrasive grains or grits are applied thereto with their longer or greater dimension substantially perpendicular to the plane of the backing;

the provision of an improved abrasive article which may be flexible or rigid, as desired, and which may or may not be made waterproof, that is, suitable for employment in a water abrading operation.

This invention further includes as objects and advantages thereof, the provision of an improved method of and apparatus for manufacturing abrasive articles; the provision of an improved method of and apparatus for applying pulverulent material to one surface of a backing irrespective of the force of gravity, that is, against the normal tendency of the force of gravity; the provision of an improved method of and apparatus for propelling a pulverulent material, such as a grit or an abrasive grain, against an adhesive coated surface; the provision of an improved method of and apparatus for the purpose set forth and including electrically operated means for acting on an abrasive grain or pulverulent material and causing it to advance onto the adhesive coated backing irrespective of the force of gravity; the provision of an improved method of and apparatus for causing the particles of pulverulent material to impinge upon and assume a position in the adhesive coated surface substantially normal or perpendicular to the surface of the backing; the provision of an improved method of and apparatus for propelling a pulverulent material onto a moving sheet in a direction transversely to the plane of movement thereof and in a direction substantially counter to gravity; the provision of an improved method of and apparatus for making abrasive articles, such as sandpaper and the like, which includes the application of a grit to the under side of the backing; the provision of an improved apparatus which includes means for feeding and applying a pulverulent material counter to the force of gravity and simultaneously with movement of the backing; the provision of an improved means for moving a web of paper and applying an adhesive thereto and including means arranged below and for operating synchronously with for applying a pulverulent material to the under side of said moving backing; and the provision of an apparatus of the character described wherein improved electrostatic or electro-magnetic means may be employed, acting on the abrasive material and causing it to move at an accelerated speed toward the sheet so as to cause it to impinge thereon in the adhesive coating and thereby present the cutting edges of the abrasive grits away from the surface of the backing and thus increase the cutting ability and life of the abrasive article.

I have also found my invention useful as a modifying step in the employment of the conventional gravity process for applying grit in the manufacture of sandpaper or other abrasive and, therefore, additional objects of this invention reside in the provision of an improved method of interposing an additional step which will apply abrasive grains either before or after the application of grits by gravity in the usual manner, it being understood that the step of applying grit irrespective of gravity, by an electro-magnetic or electrostatic means may be employed somewhere in the process of manufacture, the essential purpose being to increase the number of grits whose cutting facets are presented away from the backing and thereby to enhance the cutting ability of the finished article.

The apparatus of this invention includes a number of alternative forms for mechanically or electrically carrying out the steps of the process, and to this end is provided an improved pneumatic means and improved vibrator structure for mechanically propelling the pulverulent material and improved electro-magnetic structure for acting on the mineral and causing it to move in a cloud toward the adhesive coated surface of the moving web or backing.

The foregoing and such other objects and advantages as may appear or be pointed out as this description proceeds are attained in the structures illustrated in the accompanying drawings in which:

Figure 1 is a schematic view illustrating one form of apparatus for carrying out the process of this invention;

Figure 2 is a view similar to Figure 1 of an alternative form of the invention;

Figures 3, 4 and 5 are further alternative forms of the invention which include the electrical feature;

Figure 6 is a further alternative form of the apparatus of this invention of employing mechanical vibrating means;

Figure 7 is an enlarged schematic view illustrating a portion of an abrasive article made in accordance with this invention;

Figures 8 and 9 are additional alternative forms of apparatus for carrying out further steps of the process of this invention; and

Figure 8a is a fragmentary schematic view of another alternative form of apparatus;

Figure 10 is a further alternative form of apparatus for carrying out one of the methods of this invention.

The method of the present invention includes as steps thereof the feeding of a web or strip of paper or other fabric at a predetermined rate of speed, applying an adhesive substance to the under side of the sheet, or applying the adhesive coating to one side and then moving the sheet with the coated side out, and simultaneously with the movement of the coated sheet, causing a grit or abrasive material to be applied to the side. The sheet or web of paper may be moved so that the adhesive coated side is either presented downwardly or at any angle thereto. The movement of the abrasive grains onto the under side of the backing is done irrespective of the force of gravity and, in fact, directly counter to gravity, and preferably done by imparting relatively high velocity to the abrasive material, thus causing it to impinge upon the adhesive coating. In view of the fact that the abrasive grains are projected through an intervening space from a suitable carrier onto the adhesive coated side irrespective of or counter to the force of gravity, the grains, which are usually somewhat elongated, will assume a position in transit so that the longer dimension thereof will take a position normal to the surface of the backing, thus causing the grains to "stand" on the surface rather than lie flat in greater percentage than when they are deposited by gravity. It is to be understood that this movement of the grains and deposition of them on the coated surface may be carried out in a number of ways, either by vibration, by an air blast, or by electrostatic or electro-magnetic means.

In the alternative forms of this invention later to be described, the method involved includes combining a gravity deposition of mineral on the adhesively coated moving backing with the step of applying the grits irrespective of gravity, this being particularly useful in some

[fol. 632]

of the heavier grits wherein it may be found that the force susceptible of application by an electrostatic or an electro-magnetic means is not sufficiently active on the available area of the individual grits to cause an entirely satisfactory result or to move enough of the grits into the sheet to attain the desired end. In this invention it may be required to apply some of the grit by gravity and later apply some of the grit by one of the methods of this invention or vice versa, but, in any event, the number of grits in the entire finished article which stand erect on the backing will be measurably increased over the ordinary methods heretofore employed for depositing grit on a backing for forming an abrasive article.

This invention produces a very satisfactory piece of sandpaper in which the cutting ability is measurably increased and by the deposition of the grains of sand or grit irrespective of the force of gravity. It is possible to produce an orientation of the mineral as desired and to control the thickness of the abrasive coating much more readily than where gravity alone is relied upon or employed for depositing the grains on the sheet.

The apparatus of this invention may take any one of the forms shown in the drawings, and in the form of the invention shown in Figure 1, air pressure is resorted to for producing the mineral cloud and for projecting the mineral onto the moving web.

Referring now more particularly to Figure 1, the flexible backing 6 of paper or cloth or other fabric is drawn or fed over a series of rollers 7, 8, and over one of a pair of the squeeze rollers indicated at 7, the other roller 8 of said pair being in contact with an adhesive material contained in a tray or tank 9 by which an adhesive coating is applied to one side of the moving web. After receiving the adhesive coating, the web 6 is trained over rollers 10 and 11 and is brought back over a roller 12 so that the adhesive coated surface of said web is presented downwardly. The web may then be trained over rollers 13, 14, and fed to a suction drum 15, whence it passes into festoons for drying.

The mineral is supplied from a hopper 16 and a conventional outlet 17 which feeds a layer 18 of mineral to a moving conveyor 19. This conveyor 19 is preferably porous and passes over the feeding rollers 20 and 21 and is adapted to move at a suitable rate of speed to supply a sufficient quantity of abrasive grain. In some cases, it has been found advantageous to move the conveyor at a speed substantially the same rate of speed as the web 6, although these speeds are, of course, variables. The rollers 20 and 21 are mounted in the ends of a suitable frame 22, and this frame may be raised and lowered so as to vary the distance between mineral conveyor 19 and the moving web 6. This frame 22 may be supported freely at one end, as indicated at 23, and the other end may be raised and lowered by a toggle arrangement 24 activated by a threaded rod 25. Below the conveyor 19 and at the movable end thereof, that is, adjacent to the web 6, there is provided a second conveyor 26 which serves to conduct away excess mineral which flows over the end of the conveyor 19 and which may be returned in any suitable manner to the mineral hopper.

Below the upper flight of the conveyor 19, there are provided two air troughs 27. These air troughs are provided with flat upper walls 28, having slots 29 therein, said slots extending across the width of conveyor 19 and the troughs themselves being connected to a suitable source of air under pressure.

These troughs form in effect elongated jets or nozzles and when so placed below the conveyor belt or frame 22, a small quantity of air is emitted at high velocity which passes through the porous belt or conveyor.

It will be understood that when a blast or blasts of air are delivered from the troughs 27, this blast of air passes through the porous conveyor 19 and blows the mineral from the conveyor against the under side of the flight 18 so that the mineral is caused to strike into the adhesive at a relatively high velocity and become impinged therein. Owing to the projecting of the mineral in this manner through the intervening air space, the individual particles of grit or abrasive material are caused to assume a position parallel to their trajectory, that is, with their longer dimension perpendicular to the surface of the flight 18. In view of the fact that most of the particles of mineral are somewhat elongated, due to the manner of production of the same, they will naturally assume this position in movement from the conveyor 19 to the adhesive coated surface of the backing. As they arrive at the adhesive material, they impinge, themselves thereon and will thus stand erect in the adhesive, thus forming a sharper contour for abrasive purposes. By varying the rate of speed of the moving backing relatively to the speed of the conveyor and by varying the distance between the conveyor and the backing and the velocity of the air stream, and by increasing or reducing the number of such jets and the quantity of adhesive applied, any reasonable desired thickness of grit layer may be produced during the process and without stopping the apparatus. It will be understood that the excess mineral carried by the conveyor may be dumped into the conveyor 26 and returned by any suitable means to the hopper 16.

Referring now to Figure 2, there is provided the same general arrangement of moving backing, having the flight 30 adhesively coated from the squeeze rollers 31.

Below the flight 30 there is provided a mineral feeding conveyor 18a, receiving pulverulent material from the hopper 18a.

The conveyor 19a is mounted for movement toward and away from the flight 30 similar to the conveyor 19 and, therefore, this structure has not been shown in Figure 2.

As the mineral flows from the hopper 18a it does not always assume a smooth or even distribution on the conveyor 19a, and, therefore, it may be desirable to provide a pair of charged electrodes 32, one arranged above and one below the conveyor 19a, for the purpose of spreading the mineral evenly on the conveyor belt. The conveyor 19a in this instance may be non-porous.

When charged electrodes are put in this position they act in principle the same as the charged electrodes used for coating the mineral on the backing. An electrical charge or difference of potential is set up between the electrodes 32. The voltage or difference in potential between those electrodes is maintained great enough to produce a strong electrostatic field, but not so great as to break down the insulation between the plates which insulation may be the dielectric strength of the air or the dielectric strength

of the air plus the dielectric strength of any insulating material which may be used to wrap the electrodes.

As the mineral on the conveyor enters the static field between the plates the mineral particles take on the charge of the lower plate, and are repelled to the upper plate where they lose their charge and take on the opposite charge of the upper plate. At this point they are repelled to the lower plate. Since new mineral is being conveyed by the conveyor into the field continuously the static fields soon become supersaturated with mineral particles, and an equilibrium is reached where as many particles are thrown out of the static field as are brought in by the conveyor. By having a down-turned end 23a of the upper electrode the mineral particles that are thrown out of the static field are deflected evenly on the conveyor belt so that a smooth coating of abrasive grit is first placed on the conveyor.

The use of an electrostatic field for getting a smooth coating of mineral on the conveyor belt is not necessary to the invention but is an additional means of obtaining evenly distributed abrasive coatings, and is also a means for avoiding the use of any excess mineral on the conveyor. When the mineral is evenly coated on the conveyor at the time it is being coated, streaks, thin spots, etc., in the finished product are reduced.

At the same approximate point at which troughs 27 are provided in Figure 1 there are here provided electrically charged electrodes 33 and 34, the electrode 34 being located below the upper flight of the conveyor belt 18a and electrode 33 being disposed above the flight 30 of the backing. A sufficient difference of potential is maintained at electrodes 33 and 34 to produce a strong electrostatic field, similarly to that referred to above. This electrostatic field moves the mineral from the belt 18a to the underside, which is the adhesive coated surface of the flight 30.

As the mineral enters the electrostatic field between the electrodes 33 and 34 it becomes charged with the charge of the lower plate, and is here propelled to the upper plate 33.

It will be observed that in this method of coating the mineral is applied by a force other than gravity. In all other methods of coating sandpaper, known to me, the velocity of the particle is either in whole or part given to it by the force of gravity. In the case of this electrostatic coating the particles are oriented in the electrostatic field so that there is a tendency for the long dimension of the mineral to be perpendicular to the electrode plates, and also perpendicular to the web 30, which is being coated. The finished sandpaper product, therefore, contains a substantial percentage of the particles of mineral standing on end rather than laying flat, thereby increasing the cutting properties of the abrasive article.

Excess mineral is dumped onto the conveyor 35, whence it may be returned to the hopper 18a.

Referring now to the alternative form of the invention shown in Figure 3, there are provided the squeeze rollers 36 which apply adhesive to one surface of the moving paper web 37, and the adhesive coated surface thereof is presented downwardly in the flight 38.

In this instance there is provided a hopper 39, having a curved outlet spout 40 whose outlet 41 is presented below the moving web 38. The hopper may be provided with a bracket 42 whereby to receive a threaded member 43, said bracket engaging a guide post 44. In this manner, the hopper may be raised or lowered so as to vary the distance of the outlet 41 from the flight 38 of the backing. A suitable screen 46 may or may not be provided over the outlet so as to cause the distribution of the mineral contained in the hopper. In this instance, the mineral flows by gravity to the outlet 41, but does not pass from the outlet to the adhesive coated backing by gravity, but under the effect of the static charge established between the electrode 46 and the hopper or the screen 46 of said hopper.

The operation of the invention here is much like that of Figure 2, the screen 46 serving the purpose of distributing the mineral and at the same time preventing the large body of mineral in the hopper from forcing it against the coated surface of the backing.

Referring now to the form of the invention shown in Figure 4, there is provided the adhesive coating rollers 47, applying an adhesive coating to one surface of the moving web 48. This web 48 is trained over rollers 49 and 50 so that flight 51 thereof between said rollers is presented in a plane tangential to the surface of a conveyor drum 52 whose lineal velocity is sufficient to furnish the required amount of mineral. This drum is fed from a hopper 53 and forms one electrode of the electrostatic system. The other electrode is indicated at 54 and is disposed above the flight 51. As mineral issues from the gate 55 of the hopper, the drum rotating in the direction of the arrow A, the mineral is carried to a point adjacent to the flight 51, whereupon the electrostatic charge set up between the drum 52 and the electrode 54 will cause a projection of the mineral from the drum onto the coated surface of the flight 51.

Referring now to the alternative form of the invention shown in Figure 5, there is employed here electro-magnetic means or a permanent magnet means for moving the grits toward the adhesively coated web. The adhesively coated web is shown at 72 and is fed from a roll 73 over an adhesive coating roller 74. The horizontal flight of the web 72 passes beneath magnet 75 which may be either an electro-magnet upon which a variable voltage may be imposed or a permanent magnet.

Immediately below the magnet 75 and the flight 72 of the web, there is provided a source of supply for the mineral, that is, the abrasive material, indicated at 76. This source includes an outlet 77, and the distance between the outlet 77 and the moving web 72 may be varied as desired, or the intensity of the electro-magnet, where one is employed, may be varied for changing the thickness of the abrasive coating. The web passes over an idler 78 whence it is led to festoons not shown.

Referring now to the form of the invention shown in Figure 6, the moving web 86 is trained over a series of rollers similar to the arrangement shown in Figures 1 and 2 so that a horizontal flight 87 of the paper backing is provided, having an adhesive coating on the under side thereof. Squeeze rollers 88 engage the paper backing for applying an adhesive thereto.

In this form of the invention, a mechanical vibrating means is provided which serves to propel the mineral, that is, the grit, from the grit-feeding conveyor 90, which latter receives mineral from the hopper 89, having a gate 91. The conveyor 90 is trained over rollers 92 and 93

[fol. 634]

mounted in a suitable frame 94, which latter may be mounted for adjustment toward and away from the flight 87 similarly to the conveyor 19 of Figure 1. The conveyor 90 extends below and is separated from the flight 87 of the paper web and travels at substantially the same speed as the paper web.

The conveyor 90 passes between sets of pinch rollers, one above and one below the upper flight of the conveyor 90, as indicated by 95 and 96, and also beneath a pinch roller 97 which bears on the roller 93. The pinch rollers 96 and 96 tend to distribute the mineral evenly over the surface of the conveyor and are so spaced from the rollers 92 and 97 that the portion of the belt 90 between the rollers 95 and 96, and 92 and 97 is permitted to be slack, whereas the remaining part of the conveyor is substantially taut. This arrangement tends to limit the vibration of the conveyor belt to the zone of application of the mineral to the paper backing, as indicated at 98.

Beneath the portion 98 of the belt 90, there is provided a revolving batter 99 operating on a shaft carried in suitable bearings in the frame 94 and provided with a plurality of radial arms 78 which upon rotation rigidly strike the under side of the portion 98 of the belt, thus throwing or projecting the mineral content thereof against the under side of the adhesive coated paper backing, much in the manner in which the air stream blows the mineral or grit against the paper backing as shown in Figure 1. The batter 99 may be driven in any desired manner from a separate source of power or may be connected suitably with the rollers driving the belt 90, but geared to operate at a greater rate of speed. The rollers 96 and 96 and the roller 97 are separately driven from the belt 90 so as to produce the tautness in the belt, except the flight of the belt indicated at 98.

In Figure 7, there is illustrated an article made in accordance with the present invention. The backing is shown at 80 to which an adhesive coating 81 has been applied, and the grits, greatly enlarged, are indicated at 82, and it is noted that they stand on end in the adhesive coating, thus causing their sharper edges to project beyond the upper or outer surface of the coating, thereby enhancing the cutting ability and increasing the life of the abrasive article. While the article shown in Figure 7 is purely schematic, it will be understood that the mineral actually does take a position substantially normal to the backing and, while all of the grits may not take this position, a large number of the same do, and the cutting qualities of the abrasive article are thus greatly increased. Furthermore, by so disposing the grits, it permits of the application of an additional sizing coat or coats to the back and to the front or cutting face of the abrasive material without completely burying the grits and as a thicker coat of adhesive may thus be employed on the cutting face of the abrasive material, the engagement of the adhesive material with the abrasive material is greatly enhanced, thus further tending to increase the life of the abrasive article. Such a sizing coat is indicated at 83.

As previously pointed out, where the electrostatic or electro-magnetic methods are resorted to in some of the coarser grades of abrasive devices made, it may be found that the electrostatic or magnetic field into which the particles are conducted may not exert on each individual particle sufficient force to cause proper orientation of the particles, for the reason that the electrostatic effect is substantially proportional to the area of the particle, and the coarser the particle, the smaller the area of effect per weight. Therefore, as larger grits or sizes of particles are employed, increased force is required to move the particle, and for some purposes, insufficient increase in force results because of the reduced area per weight. Therefore, in such cases, a form of the invention, as shown in Figure 8, may be resorted to wherein the mineral is applied to the adhesively coated backing in part by gravity and in part by electrostatic or electro-magnetic means.

In view of the fact that the electrostatic and electro-magnetic means may for some purposes be alternatively employed, I have illustrated in Figure 8 merely the electrostatic elements, though it will be understood that the electro-magnetic means of Figure 5 may be employed in the same manner.

Referring in detail to Figure 8, I have illustrated a web of paper 84 coming off a roll 85 and passing through an adhesive coating device illustrated in general at 86. The web 84 is thence trained over rollers 87, 87a, so that it has a substantially horizontal flight 87b, which receives grits in the desired amount from an ordinary conveyor 88, said conveyor receiving grits from the hopper 89. The web of paper thence is carried downwardly to a horizontal flight 90 by the provision of rollers 91, 91, and adjacent one end of this flight, I provide the conveyor 92 receiving additional grits from the hopper 93, which may be adjustably mounted similar to the conveyors hereinabove described, said conveyor 92 passing beneath the flight 90 of the paper web. As the web passes over the rollers 87a and 91, a quantity of the mineral deposited from the conveyor 88 onto the web will drop off, and, for conveying away this excess mineral, I provide a transversely running conveyor 92a arranged between the flight 90 and the conveyor 92. Beneath the upper flight of the conveyor 92 and above the flight 90 of the web 84, I provide electrostatic electrodes 94 and 95, or may provide an electro-magnet similar to that shown in Figure 5 which will cause grit coming from the hopper 93 to be applied counter to the force of gravity onto the under surface of the flight 90. A conveyor 96a may be employed for carrying off the excess mineral from the conveyor 92.

In the operation of this form of the invention, it will be understood that a desired proportion of mineral applied by gravity to that applied by force other than gravity may be determined by actual operation so that the desired quantity of the abrasive grits is properly applied to the paper web.

It may be necessary in some of the very coarse grains to additionally apply grit to the moving web, and this may be done by providing an additional conveyor similar to that indicated at 92 and additional electrodes, or may be accomplished by additionally applying by gravity grits at the point indicated at 96, this arrangement being shown in Figure 8a and the grits being applied to an upper flight 97 of the paper web just before it passes on to the festoons.

Figure 9 illustrates the alternative forms suggested in connection with Figure 8, that is, wherein electrostatic or electro-magnetic means, or any other means counter to gravity, is employed for applying the grits, and in Figure 9 the paper web is indicated at 96a having a horizontal flight 97a disposed below a conveyor 98a. In this instance, the grits are deposited from the conveyor

98a by gravity, and the orientation of the grits is assisted by a plate electrode 96. The paper web may then be carried in position so as to provide a horizontal flight 99, and an electrostatic or electro-magnetic or other grit applying means for applying grit counter to gravity may be employed at one or more points as indicated at A and B, wherein the conveyors 100 and 101 convey grit from suitable hoppers 102 and 103, and electrodes 104, 104 and 105, 105 serve to apply the grit.

Referring now in detail to Figure 10, there is further illustrated there an apparatus for applying the grit to the adhesively coated backing by an electro-magnetic means. In this form of the invention a moving web is provided indicated at 106, this web being a flexible strip of paper which is suitably adhesively coated by a mechanism indicated generally at 107.

The moving web thus adhesively coated is carried over a roller 108, thence over a roller 109, said roller 109 being mounted on a shaft carried in a bearing arm or arms 110 pivotally mounted at 111, whereby the roller 109 may be raised and lowered in the substantially vertical plane of the arrows 112, thus permitting the lower flight 113 of the paper web to be elevated or depressed, as the case may be.

Mineral is deposited from a hopper 114 onto a conveyor 115 trained over rollers 116 and 116a, the upper flight 117 of said conveyor passing beneath the roller 109 and the moving web and conveying mineral, that is, the grit, to a point adjacent to the roller 109.

Preferably immediately below the axis of the roller 109 and below the upper flight 117 of the conveyor 115 I provide an electro-magnet 118 which is so mounted that its magnetic flux passes through the conveyor and causes the mineral particles to stand erect, as indicated at 119, as they move along with the upper flight of the conveyor. While the mineral particles are thus standing erect they come into contact with the adhesively coated side of the paper backing and are thus picked up by it and conveyed away, the backing being trained over rollers 120 and carried to the festoons similarly to the other forms of the invention. It will be observed that the angularity of the lower stretch 113 of the paper web is such that it lies upwardly to the conveyor 115. In this way the particles of grit adhering to the paper are not knocked down by other particles remaining on the conveyor, it being understood that the grit is fed somewhat in excess of the required amount so that an adequate amount will be deposited on the adhesively coated side of the backing. The excess mineral drops off the conveyor 117 and is carried to a collecting means by a conveyor 121.

It will be understood that by varying the amount of mineral fed from the hopper, the strength of the electro-magnet, that is, the strength of the flow current transferred, and the position of adjustment of the roller 109, the assembly may all be properly correlated for obtaining the desired grade of finished article.

It may be desirable that a certain amount of pressure be exerted on the erect particles of mineral so as to cause them to impinge upon the adhesively coated side of the paper and thus, by manipulation of the arms 110, an adjustment of the pressure of the roller 109 may be attained.

It will be understood that while the electrostatic and electro-magnetic means for exerting counter to gravity are illustrated in Figures 8 and 9, the mechanical means hereinabove described may be conveniently employed in these locations without departing from the spirit of the invention. However, the reason the electro-magnetic and electrostatic elements are particularly shown here is that the difficulty of counter coating successfully with the coarser grains is more likely to arise with these elements than with the vibrator or air blast heretofore described.

I wish to point out that where the expressions "electro-magnetic" and "electrostatic" are employed in the specification, I refer to the employment as well of a permanent magnet or some other form of static charge or magnetic charge which will perform the function.

Having thus described my invention and illustrated its use, what I claim as new and desire to secure by Letters Patent is:

1. The method of manufacturing an abrasive article having a backing and a grit layer, which includes as steps thereof applying an adhesive to one side of the backing, bringing the coated side of the backing into proximity to a quantity of grit, providing an electrical force acting on the grit for causing it to stand erect in relation to the backing material, and bringing the grit while thus erect into embedding contact with said adhesive by a differently applied mechanically embedding force.

2. In the method of making sandpaper or the like, the steps which comprise adhesively coating a web, directing said web with the adhesively coated surface downward and presenting the same adjacent a surface over which a layer of abrasive particles have been distributed, synchronizing the movement of the web and the distributed layer of abrasive and then transferring the abrasive to the adhesive.

3. In the method of making sandpaper or the like, the steps which comprise adhesively coating a web, directing said web with the adhesively coated surface downward and presenting the same adjacent a surface over which a layer of abrasive particles have been distributed, synchronizing the movement of the web and the distributed layer of abrasive and then transferring the abrasive to the adhesive by contacting the adhesive with the abrasive and removing the abrasively coated web from the zone of contact.

4. In the manufacture of granular coated webs, the method comprising positioning from a layer thereof in a deposition zone elongated granular particles upon an adhesive coated web with the major axes of the particles substantially uniformly oriented at an angle with respect to the surface of the web by moving the web into the deposition zone where said web is mounted in a position to face downwardly while in said zone, and supporting the freshly coated web with respect to the horizontal with the particle coated side down and in a position to have the particles thereof clear the layer in the deposition zone.

5. In the manufacture of granular coated webs, the method comprising positioning from a layer thereof in a deposition zone elongated granular particles upon an adhesive coated web, with the major axes of the particles substantially uniformly oriented at an angle with respect to the surface of the web by moving the web into the deposition zone where said web is mounted in a position to face downwardly while in said zone, orienting substantially all of the particles with their axes substantially in parallelism with each other and substantially normal with respect to the surface of the web and supporting the freshly

[fol. 636]

coated web with respect to the horizontal that the oriented particles hang vertically downward and in a position to have the particles thereof clear the layer in the deposition zone.

6. In the manufacture of abrasives upon a downwardly faced adhesive backing, the steps which include directing, depositing and orienting abrasive particles to form an abrading surface by subjecting the particles, during attachment thereof to the backing, to the combined actions of a contacting mechanical embedding force and an electrical force.

RICHARD PAUL CARLTON.

Certificate of Correction

Patent No. 2,376,342. May 22, 1945.

RICHARD PAUL CARLTON

It is hereby certified that errors appear in the printed specification of the above numbered patent requiring correction as follows: Page 1, first column, line 28, for "substance" read *substances*; line 33, for "cuttings" read *cutting*; page 2, second column, line 30, strike out "and" after "invention;" and insert the same after "apparatus;" in line 32; page 3, first column, line 7, for "into" read *onto*; line 12, for "whch" read *which*; and second column, line 30, after the syllable "pinge" strike out the comma; page 5, second column, line 4, for "gits" read *grits*; and that the said Letters Patent should be read with these corrections therein that the same may conform to the record of the case in the Patent Office.

Signed and sealed this 22nd day of October, A. D. 1946.

[SEAL]

LESLIE FRAZER,
First Assistant Commissioner of Patents.

[fol. 637]

IN UNITED STATES DISTRICT COURT
FOR THE SOUTHERN DISTRICT OF INDIANA,
INDIANAPOLIS DIVISION

Defendant's Exhibit 5A.

PAGE 10 OF APPLICANT'S AMENDMENT FILED JUNE 28, 1945.

It is submitted that the Darrah and Pugh patents cannot be properly aggregated to build up a hypothetical anticipation of claims 7, 8, 9, 31, and 32. The spray of Darrah is discharged from the nozzle 4 through the opening in an oppositely charged element 8. In Pugh, the spray from gun 45 passes through an opening in a similarly charged element 10. Obviously, the spray-surrounding element cannot be charged both oppositely to the spray, as in Darrah, and similarly to the spray, as in Pugh. If the hypothetical aggregation is to include both Darrah's electrode 8 and Pugh's booth-wall 10, will the booth-wall be at the same potential as the electrode, will it be at the same potential as the nozzle, or will its potential differ from both? And what of the articles to be coated—will their potential be that of the annular electrode, that of the nozzle, or different from both? The answers to such questions are not found in the references, and it is therefore not apparent how the aggregation is to be effected. In such circumstances, it is submitted that the rejection on Pugh and Darrah is not well founded and that claims 7, 8, 9, 31, and 32 are allowable.

In connection with the rejection of claims on Pugh and Darrah, it is to be noted that applicants' apparatus employs a single electrostatic field to perform two functions—the production of atomization and the propulsion of the atomized particles to the article being coated. Applicants are not claiming broadly any and all devices in which liquid is electrostatically atomized and then electrostatically propelled to and deposited upon an article to be coated.

[fol. 638]

PAGES 14 AND 29 OF APPLICANT'S BOARD OF APPEALS BRIEF FILED JANUARY 5, 1951.

(a) increased from 80 or 100 to 200 the number of panels coated per gallon of paint used;*

(b) resulted in a coating "noticeably better than that obtained" with air-atomized, electrostatically deposited paint; and

(c) could be performed "in the open factory building and without the necessity for an enclosing booth or any exhaust system" such as was necessary in the other process "to carry away the overspray."

Helmuth, Juvinall, and Simmons are, as shown by their respective affidavits, well qualified to determine and compare the efficiencies of various painting methods. Their affidavits testify that procedures employing the apparatus and method of this application are markedly more efficient than prior spray-painting procedures. The affidavits also establish that the high paint-utilization efficiencies attainable with applicants' method and apparatus permit the elimination of paint spray booths and air-exhaust systems.

The Essential Novelty of the Invention.

The heart of applicants' invention lies in the concept of employing a single electrostatic field which acts as the sole agent to atomize paint, disperse the particles formed by

---

* It is not contended by applicants that the increased paint-utilization efficiency obtained by Simmons is representative of what is to be expected in the coating of panels and similar articles. Nevertheless, his affidavit does reflect the experience of one independent user. Each of the panels coated by Simmons had a multiplicity of perforations; and it may be that the presence of those perforations explains the exceptional improvement in efficiency which he obtained.

atomization, and deposit those particles on the work. That concept is unquestionably novel. We have here no mere substitution of one old element or step for another, no mere change of proportion, size, or degree, producing only the expected and obvious result. Instead, we have an attack from an entirely new angle on a problem of long standing. The results obtained, by virtue of their very magnitude, are entitled to be considered unobvious and unexpected.**

[fol. 639] Claims 61 and 65 distinguish specifically from Huebner '194 by requiring the article and its support to move through a considerable distance in unvarying relationship, whereas in Huebner the paper support 16 or 116 never moves with the paper.

Claims 61, 65, 67, and 78 describe a construction in which the lines of force of the field sweep the surface of the article being coated, a requirement whose significance is brought out above in connection with method claim 76.

Patentability.

There can be no argument as to the novelty of the appealed claims. Their patentability, as the wording of the rejection indicates, hinges upon whether their subject matter involves invention.

The heart of applicants' invention lies in the spray-painting of articles of manufacture by the use of a single electrostatic field which will both atomize a liquid coating material, disperse the atomized particles, and then deposit those particles on the surface which is to be coated. The references of record can be searched in vain for any disclosure or suggestion of such a coating process. The Examiner points out how prior-art structures might be modified to render them anticipatory; but in so doing the Ex-

** Eibel Process Co. v. Minnesota etc., 261 U.S. 45, (20% increase in efficiency); Ex parte Alexander, 72 PQ 524; Ex parte Taussig, 50 PQ 394.

aminer is clearly exercising ex post facto wisdom. No suggestion of the proposed changes can be found within the four corners of any reference, where it must be found to negative patentability.

"Obviously," the Examiner states, "liquid coating material could be supplied through the tube 32 in Meston's Fig. 5 and through the pipes 71 in Figs. 18 and 19." But, bearing in mind that Meston was concerned entirely with the deposit of particled solid material which had to be supplied to the field by suspending it in a carrier gas stream, who would think of running liquid through Meston's pipes?

[fol. 640]

IN UNITED STATES DISTRICT COURT
FOR THE SOUTHERN DISTRICT OF INDIANA,
INDIANAPOLIS DIVISION

Defendant's Exhibit 5B.

AFFIDAVIT OF GILBERT ISGRIGG FILED MARCH 20, 1953.

STATE OF INDIANA,
COUNTY OF BARTHOLOMEW, } ss.:

Affidavit.

Gilbert Isgrigg, of Columbus, Indiana, being first duly sworn, deposes and says as follows:

I am an engineer in the employ of Hamilton Manufacturing Corporation, of Columbus, Indiana, manufacturer of the "Cosco" line of metal chairs, stools, step stools, and utility tables.

The utility tables manufactured by my employer have sheet-metal tops measuring either 16 x 22 inches or 17 x 24 inches, and each table is provided beneath the top with one or two shelves of corresponding size.

The tops and shelves of the tables mentioned are finished by painting them; and my duties for my employer include the selection and supervision of the equipment and methods used in painting the tops and shelves of utility tables.

For a period beginning in March, 1948, and continuing through the present, the tops and shelves of Cosco utility tables were painted with the use of electrostatic painting equipment under license from Ransburg Electro-Coating Corp. of Indianapolis, Indiana. Such equipment embodied a conveyor for conveying the tops and shelves through a coating zone between two fine-wire electrodes while spray guns of conventional type employing compressed air for paint-atomization directed sprays of paint into the space between each electrode and the articles moving past it. [fol. 641] High voltage equipment supplied by said Ransburg Electro-Coating Corp. maintained an electrostatic field between the electrodes and the work, and the paint sprays entered such field at an acute angle to the path followed by the articles.

On or about November, 1952, the aforesaid painting equipment was replaced by new equipment in which the work is conveyed past and in spaced relation to a number of atomizers maintained at an electrical potential of about 70,000 volts with respect to the work. Paint supplied at a controlled rate to such atomizers is electrostatically atomized therefrom in the form of a spray and electrostatically deposited on the work. No compressed air is used to atomize the paint or to carry it to the work. The atomizers are mounted in fixed position with respect to the path followed by the table tops and shelves, and the operation is substantially fully automatic. The atomizing devices and related equipment including the paint-supply means and the source of high voltage were supplied by said Ransburg Electro-Coating Corp.

The new equipment has resulted in a substantial saving of paint, the extent of the paint-saving depending to a degree on the color of the paint. The most commonly

used paint is red in color, and with that paint the number of tops and shelves covered per gallon of paint used is, with the new equipment, more than twice what it was with the electrostatic coating equipment previously used.

In addition to the paint saving represented by the increase in the number of tops and shelves coated per gallon of paint used, the following differences exist between painting as performed with the old electrostatic coating equipment and painting as performed with the electrostatic atomizing equipment presently in use:

[fol. 642] a. The new process results in a substantially improved distribution of paint, the distribution of paint obtained with the present equipment being substantially uniform.

b. The present equipment is able to deposit approximately twenty-five per cent more paint in a single pass of the articles through the coating zone, the conveyor speed being the same in both instances.

c. The former electrostatic process required two touch-up men operating manually directed spray guns to apply paint to areas insufficiently coated by the electrostatic coating equipment previously in use. With the present equipment, no touch-up men are needed.

d. The former electrostatic method required a water-washed spray booth and a relatively large-capacity air moving apparatus for entrapping oversprayed paint and ventilating the spray booth, whereas the present equipment requires only a low-capacity ventilating system for removing solvent-vapor and there is substantially no oversprayed paint to entrap.

e. With the former electrostatic coating equipment, an average of about eighteen man-hours were devoted nightly to the job of cleaning electrodes, the floor and walls of the booth, and the spray equipment and to removal of over-spray sediment in the

water-wash tanks. With the present equipment, nightly clean-up work has been reduced sixty-five to eighty per cent.

f. The present equipment, being dependent upon electric power alone, is less subject to interruption in operation than was the prior equipment, which was dependent upon electric power, compressed air, and water supply.

[fol. 643] g. The old electrostatic coating equipment required more frequent adjustment than does the present equipment to maintain adequate coverage and quality of finish.

GILBERT ISGRIGG.

Subscribed and sworn to before me this 10th day of March, 1953.

(SEAL) WALTER MILLER,
Notary Public.

My commission expires May 25, 1954.

AFFIDAVIT OF DONALD C. HOWARTH FILED MAR. 20, 1953.

State of Indiana
County of Marion } ss.:

Affidavit.

Donald C. Howarth, of Indianapolis, Indiana, being first duly sworn, deposes and says as follows:

I am, and for several years have been, employed by Ransburg Electro-Coating Corp. of Indianapolis, Indiana.

My employer owns patents and patent applications relating to methods and apparatus for electrostatic spray painting, licenses manufacturers to use such methods and apparatus, and provides many of its licensees with certain portions of the equipment employed in practicing the licensed methods.

For the last several years, my duties for my employer have involved supervision of the installation of licensed methods and apparatus and supervision of all billing to licensees.

Electrostatic spray painting methods licensed by my employer have been of two general types. In one type, [fol. 644] hereinafter referred to as the No. 1 method, articles to be painted are moved on a conveyor past a charged electrode, or between two spaced charged electrodes, while paint sprays formed by conventional spray guns employing compressed air have been discharged into the electrostatic field between the electrode or electrodes and the articles, such sprays being directed at an acute angle to the direction of article movement. In the other process, hereinafter referred to as the No. 2 process, articles to be coated are conveyed past and in spaced relation to one or more atomizers normally maintained at an electrical potential of about 70,000 volts with respect to the work, while paint supplied at a controlled rate to such atomizers is atomized and electrostatically deposited on the work without employment of any compressed air.

The aforesaid No. 1 method was in use, and was the subject of hundreds of licenses to manufacturers, for several years prior to the introduction of the No. 2 method. Although a few licenses to practice the No. 2 method had been granted prior to the third quarter of 1951, it was not until that time that Ransburg Electro-Coating Corp. published information as to that method or embarked on any intensive effort to exploit it commercially. Up to the present time, there are seventy-eight (78) manufacturers licensed to employ one hundred one (101) No. 2 units, and additional licenses to employ that method are being granted as rapidly as the Ransburg organization can handle engineering and supervision necessary to new installations.

Some of the companies which now employ the No. 2 process under license from my employer are:

Aluminum Goods Manufacturing Company
Arvin Industries, Inc.
E. I. DuPont de Nemours & Company

General Electric Company
Houdaille-Hershey Corporation
[fol. 645] Johns-Manville Corporation
Landers, Frary & Clark
Monroe Auto Equipment Company
Proctor Electric Company
Reo Motors, Inc.
Reynolds Metals Company
Speed Queen Corporation
The Studebaker Corporation
Taylor Wharton Iron & Steel Company
Thor Corporation
Whirlpool Corporation

Of the seventy-eight (78) companies licensed by my employer to use the No. 2 process, a substantial portion of them are employing it to replace the No. 1 process which my employer had previously licensed them to use.

Licenses to use the No. 2 process granted by my employer require the payment of an initial fee, varying from $5,000 to $40,000, depending upon the size and nature of the installation and the amount of equipment they ask my employer to supply, and also require the payment of subsequent monthly fees depending in amount upon the quantity of paint used.

As a result of my work, I believe I am familiar with all types of spray coating processes generally used in American industry. The aforesaid No. 2 process is the only spray coating process known to me which, in an industrial spray painting operation, can use substantially all the coating material sprayed.

DONALD C. HOWARTH.

Subscribed and sworn to before me this 12th day of March, 1953.

IRIS M. MCKENNA,
Notary Public.

My Commission expires Oct. 6, 1954

[fol. 646]

PAGE 15 OF APPLICANT'S BOARD OF APPEALS BRIEF
FILED MAY 25, 1953.

The Helmuth affidavit testifies to a paint loss of 40%-55% in the painting of refrigerator panels and cabinets with air-atomized paint, non-electrostatically deposited. The Juvinall affidavit states that in applicants' process work of the same type received 99% of the paint used, and that even on such "open" articles as automobile steering wheels 97% of the paint was deposited on the articles. Helmuth refers to the skilled labor and overspray-collecting equipment necessary in painting refrigerator cabinets by the conventional spray-gun technique.

Gilbert Isgrigg has had experience in painting metal-table tops and shelves by applicants' method and by a method employing electrostatic deposition of air-atomized paint. His affidavit establishes that applicants' method and apparatus doubles paint-utilization efficiency, provides a heavier and more uniform coating, removes the necessity for "touch-up" men, makes possible the elimination of paint-recovery equipment, is subject to less frequent interruption of operation, reduces maintenance labor, and requires less frequent adjustment.

The affidavit of Donald C. Howarth testifies to the wide acceptance and commercial success of applicants' invention on industrial production lines. At the date of the affidavit, 78 licensees including such companies as General Electric, Dupont, and Studebaker had paid substantial initial sums and were making continuing monthly payments for the right to use 101 production units embodying the invention.

The advantages and commercial success to which the affidavits testify establish that applicants' invention possesses real worth and constitute compelling evidence that what applicants have done would have been done much earlier had it required only mechanical skill.

[fol. 647] VI. The Prior Art.

The principal reference relied upon by the Examiner is the Formhals patent No. 2,187,306, which shows a process of making a composite thread by collecting fine fibres on a base thread and then rolling such fibres into contact with the base thread.

Page 5 of Board of Appeals Decision of December 18, 1953.

Appeal No. 372-08

The other patents relied on by the Examiner, Althouse and Gundelfinger, show that the use of belts for conveying thread is well known in the art. These patents require no detailed description.

The Examiner has taken claim 88 as illustrative of the method claims under consideration. He contends that the only distinguishing feature of this claim over Formhals lies in the statement that the liquid is dispersed and deposited while still in a liquid state, and he holds that "such a statement adds nothing patentable to the process of Formhals but merely states what are the results desired." With reference to claims 72, 89, 91, 96, 97, and 99, the Examiner points out that these claims omit the limitation contained in claim 88 to the effect that the particles as deposited are liquid.

In controverting the rejection of the claims, the appellants contend that they were the first: "to spray paint onto an article surface by electrostatically atomizing it into discrete particles, electrostatically dispersing those particles, and electrostatically depositing them while still liquid," thereby eliminating the necessity for atomizing air and attaining high paint-utilization efficiencies and other advantages testified to in the affidavits filed in the present case.

[fol. 648] We have examined these affidavits with care and we find that they establish beyond question that the spray-painting process to which the claims are directed has achieved commercial success.

The appellants further argue that:

"it is improper to regard Formhals' stream-shattering as 'atomization' or his long fibres as 'particles'; but even if that point be waived, Formhals' fibres are not discrete or dispersed, because they are continuous with the mother stream and connected with each other by virtue of that continuity."

[fol. 649]

Defendant's Exhibit 6

IN UNITED STATES DISTRICT COURT
FOR THE SOUTHERN DISTRICT OF INDIANA

INDIANAPOLIS DIVISION

Amendment C filed August 23, 1956

IN THE UNITED STATES PATENT OFFICE.

In re application of William A. Starkey *et al.* Serial No. 434,366 Filed June 4, 1954	Apparatus for Electrostatically Coating Articles. Division 25.

AMENDMENT "C".

Hon. Commissioner of Patents,
Washington, D.C.

Sir:

Please enter the following amendment:

In the specification:

Page 1, line 3, after "No." insert —2,685,536—; same line, after "granted" insert —August 3, 1954—.

Page 6, line 16, after "material." add — As illustrated in the drawings, the needles are sufficiently close together as to cause the coating material to bridge the spaces therebetween.

In the claims:

Cancel claims 1, 9, 12, 13, 15, 16, and 17 without prejudice.

Please insert the following new claim:

(4.) ~~9~~. ~~18~~. Apparatus for electrostatically spray-coating an article, comprising an atomizing head, means [fol. 650] for feeding liquid coating material to said head, means including said feeding means for distributing coating material to an extended atomizing zone where it is atomized from a plurality of spaced points, said points being sufficiently close together to permit the coating material to bridge the spaces therebetween, a support for

supporting an article to be coated in spaced relation to said atomizing zone, a means including a high-voltage

source for creating over the surface of the article on said support an electrostatic field capable of atomizing the coating material into finely divided, electrically charged particles and electrostatically depositing particles

atomized from said atomizing zone on the article while still

in liquid state, said atomizing head and support being so

relatively disposed as to provide between the article and

the atomizing zone a spacing great enough to permit substantial dispersion of the atomized particles by the electrostatic forces of the field.—

REMARKS.

Applicants' attorney desires to express his appreciation for the courtesies extended to him at the recent interview with the Examiner in charge of the application.

At the interview, the final rejection of the claims on the grounds stated in paper No. 9 were discussed at some length and a new claim (here submitted as claim 18) was also discussed.

[fol. 651] It was pointed out that one of the features of the suggested new claim is the provision of feeding means which distribute coating material to an extended atomizing zone from which zone it is atomized from a plurality of spaced points with the points being so close together as to permit the coating material to bridge the spaces therebetween. Such, of course, is not the system of Formhals as, regardless of the spacing of his nozzles, the coating material being contained within the nozzle could not bridge the space therebetween.

It was suggested by the Examiner that the obviously inherent bridging of the coating material at least in the apparatus illustrated in Figures 5 and 6 be pointed out in the specification and accordingly the specification has been amended to do so.

The unallowed claims remaining in the application are proposed to be cancelled with this amendment and it was believed at the interview that an action of this nature by applicants would place the case in condition for allowance.

Therefore, withdrawal of the final rejection, entry of the present amendment, and reconsideration and allowance of the application as now presented are respectfully requested.

Respectfully submitted,

SCHROEDER, HOFGREN, BRADY & WEGNER,
WILLIAM J. STEELMAN.

Chicago, Illinois,
August 21, 1956.

[fol. 652]

Defendant's Exhibit 21

April 12, 1932. E C SCHACHT 1,854,071

METHOD OF MANUFACTURING ABRASIVES

Filed July 14, 1930

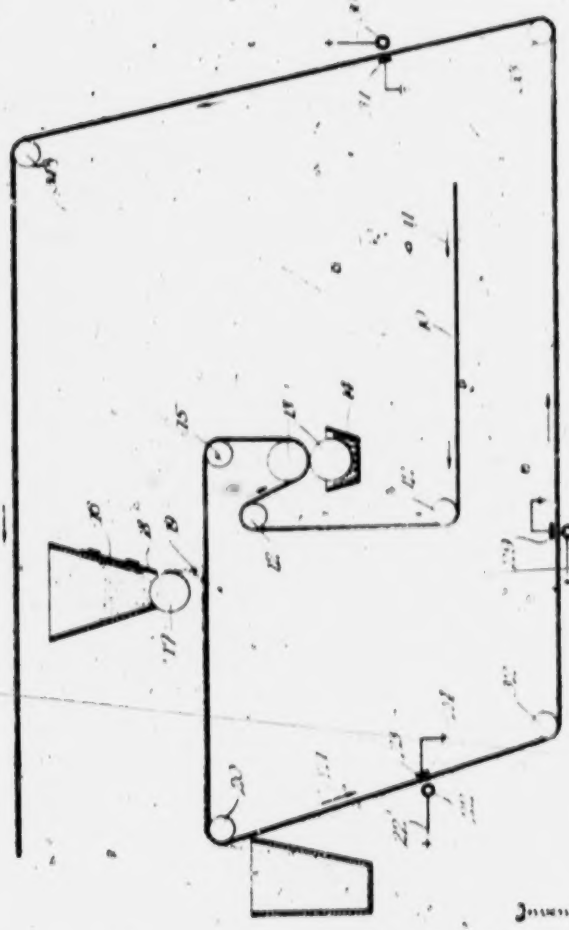

Inventor

Elmer C. Schacht

By Cushman Bryant & Darby

Attorneys

[fol. 653]

Patented Apr. 12, 1932

1,854,0

UNITED STATES PATENT OFFICE

ELMER C. SCHACHT, OF TROY, NEW YORK, ASSIGNOR, BY MESNE ASSIGNMENTS, TO BERR-MANNING CORPORATION, A CORPORATION OF MASSACHUSETTS

METHOD OF MANUFACTURING ABRASIVES

Application filed July 14, 1930. Serial No. 467,981.

The present invention relates to abrasives, and more particularly to an improved method of manufacturing abrasives, such as sand paper.

The invention has as an object a novel method for controlling the disposition of the abrasive particles on their carrier and thereby producing a sharper and more efficient abrasive surface.

The invention seeks to provide a method for positioning or orienting the individual abrasive particles which form the abrasive surface so that the sharpest portion of substantially each particle will be exposed.

The method will be described in connection with the manufacture of an abrasive material, such as sand paper, although it will be understood that the invention is applicable to any type of abrasive material.

Abrasive paper, by which is meant any abrasive sheet or strip material having a surface of abrasive material, such as sand, ordinarily consists of a backing or carrier of paper or fabric, or combined paper or fabric, upon which the abrasive particles are retained by an adhesive. Usually the adhesive is applied to one surface of the carrier and thereafter the abrasive or cutting material is deposited on the adhesive surface where it is retained by the latter. The commonly employed particles are of irregular formation and ordinarily have one axis of greater dimension than the other, as well as surfaces which are sharper than other surfaces and, therefore, more suited for abradent action. It is desirable that these sharper surfaces be exposed to provide a relatively more efficient abrasive material. Moreover, the broader surfaces afford a more effective area for adhesively anchoring the individual particles to the carrier.

The present invention provides a novel method for producing this result and for arranging the particles so that their sharper portions are exposed and their broader surfaces adhesively joined to the carrier.

The invention involves the use of an electrical charge, produced by an electrical field which is preferably of electrostatic character, arranged to influence the individual particles so that each particle has exposed sharpest and most effective portion.

In carrying out the method, a supply sand may be arranged in a hopper above adhesively surfaced carrier or backing. hopper may be provided with the usual and feed roll for controlling to a certain tent the showering of the sand upon the hesive surface to be coated, although the may be deposited upon the carrier in ex of the quantity desired. After the sand been deposited upon the carrier, and any cess particles which are not required forming the abrasive surface have been moved, the carrier is subjected to the act of an electrical field, preferably of elect static character. The electrical field is ployed while the adhesive is not fully and preferably before it is hardened to appreciable extent. If the adhesive has ha ened more than is desired it may be soften by the application of heat or by other me so that the action of the electrical field m produce the desired effect.

The electrical field is arranged so that positions of the individual particles changed to expose the sharpest portion each particle. The electrical field is utili by passing the abrasive surface therethrou and it has been found that there is obtained this manner the proper orientation of e individual particle so that its sharpest porti is exposed.

It is believed that the field causes e particle substantially to align itself so th its longitudinal axis is virtually parallel the lines of force of the field. The rate discharge of an electrostatic charge is dependent upon the surface characteristics the charged body and the longer the radi of curvature the slower the rate of discharg the sharper the point, the faster the rate discharge.

It is believed that this relation of the r of discharge and the surface characteristi of the charged body, e. g. sand grain with pointed abrasive portion, causes the sharpe points in the grains to be arranged so as discharge in the direction of the field. If t field is at one side of the carrier, it follo

[fol. 654]

that any particles which are embedded in the adhesive in such a way that the sharpest points are not exposed will be turned or repositioned to cause the sharpest points to be directed to the electrostatic field and away from the carrier surface. Consequently, the many particles which do not have their points exposed when deposited upon the carrier will be oriented or changed in position by the action of the electrical field which exerts, in effect, a leverage upon the particles.

The location of the field in practicing the method will be dependent upon the "setting" of the adhesive. Rapid drying adhesive, such as lacquer, sets almost instantly and the field should be very close to the point where the sand is applied. Glue, on the other hand, requires a longer time to set, and varnish a still longer period. Therefore, the position of the electrical field may be altered according to the type of adhesive employed.

Moreover, the character or power of the field may be modified by modifying the position and size of the electrode, or changing the voltage. This phase of the invention need not be described in detail, since it is disclosed in my copending application Serial No. 296,323, filed July 30, 1928 which relates to a somewhat different process, but covers the broad idea of utilizing an electrical field for orienting the abrasive particles.

For practicing the method, various forms of apparatus may be employed.

In the accompanying drawing there is shown somewhat diagrammatically a suitable apparatus.

10 indicates the carrier or paper sheet which may be fed in the direction of the arrows 11 by suitable means (not shown) over guide rolls 12 and between coating rolls 13 which deposit a suitable adhesive from an adhesive container 14 upon one surface of the carrier. The coated surface, after passing over a roll 15, travels beneath a sand hopper 16 having a feed roll 17 and an adjustable controlling gate 18 for regulating the supply of abrasive material such as sand particles 19 to the exposed surface.

As illustrated in the drawing, the sand may be supplied in excess of the quantity required and at a roll 20 the carrier may take a sharp turn to provide a vertical run, indicated by the arrow 21, for the purpose of causing removal by gravity of the excess sand which has not been adhesively retained upon the surface. As will be understood, it is not necessary that this excess abrasive be applied and to control accurately the application of the abrasive, the gate and feed roll of the hopper 16 may be adjusted and other controlling means such as an electrical field of the character disclosed in my copending application may be utilized adjacent the hopper.

After the excess abrasive, if any, has been removed, the abrasive surface may be subjected to an electrical field. This field changes the positions of the individual particles, particularly of those particles which do not have their sharpest portions exposed.

The change of position of the various particles occurs in several ways: First, the particles which do not have their sharpest portions exposed are oriented or turned by the lines of force so that the sharper surfaces of the abrasive coating are exposed. Secondly, the various particles upon the surface are stratified, with the result that the larger or more effective particles are carried to the surface. As will be understood, in the manufacture of sand paper of any particular grade, the particles vary in size and will include both under-grade and over-grade sizes. The electrostatic field tends to carry to the top surface the larger particles, that is, the particles having the larger areas of cutting surface. Consequently, the change of position results from both orientation, i. e., turning of the particles so that their longest axes are parallel to the lines of force and to stratification, which results in the carrying of the larger particles to the surface of the carrier. The electrical field, which is preferably of electrostatic character, may be formed by a discharge electrode 22 connected by a lead 22' to a source of high voltage (not shown). This electrode is disposed at the abrasive side of the carrier and cooperates with an electrode 23 grounded at 24 and disposed on the opposite side of the carrier for the purpose of forming a zero or ground potential side of the field. The field may be varied in intensity and extent as desired and it may be found desirable to vary these characteristics in accordance with the extent to which the particular adhesive employed has set and in accordance with different sizes or kinds of abrasive particles. It is possible, for example, to make a field of higher unit intensity by reducing the diameter of the tube 22, or a broader field, or one of lower unit intensity, by increasing the diameter of the tube. The proximity of the ground or zero electrode potential 22 affects the field.

As explained in my copending application, it has been found that by moving the tube 22, as by rotation, there will be produced a pronounced effect upon the character of the field.

At times it may be found desirable to subject the carrier repeatedly to the electrical field and for this purpose there may be provided a second electrical field produced by electrodes 28, 29 and a third field produced by electrodes 30 and 31 arranged in relation to the carrier in the same manner as the field first described. The carrier in passing through these fields for repeated subjection to electrical action traverses rolls 32, 33 and 34 and from the latter may be subjected to the usual finishing operations.

By the expression "adhesive action", and

"adhesively retaining" as used in the specification and claims with reference to the retention of the abrasive particles upon the carrier, is meant any means other than electrical for retaining the abrasive material on the carrier surface. By "abrasive" is meant any abrasive or coating material in fragmentary form; by "carrier" is meant any desired material or support on which the fragmentary or divided material may be imposed or deposited. Obviously, the method described in detail may be varied considerably without departing from the invention and apparatus considerably different from that illustrated and described may be employed for practicing the method, the essential characteristics of which are set forth in the following claims.

I claim:

1. In the manufacture of abrasives, the improved method which consists in providing a carrier having a surface of adhesive material adapted to retain abrasive material deposited thereon, applying finely divided abrasive material to said adhesive surface and after deposit of the abrasive, but while the adhesive is not fully set, changing the positions of the individual abrasive particles on said surface by progressively subjecting the abrasively coated surface to the action of an electrical field.

2. In the manufacture of abrasives, the improved method which consists in providing a carrier having a surface of adhesive material adapted to retain abrasive material deposited thereon, applying finely divided abrasive material to said adhesive surface and after deposit of the abrasive, but while the adhesive is not fully set, changing the positions of the individual abrasive particles on said surface by passing the abrasively coated carrier surface through an electrical field.

3. In the manufacture of abrasives, the improved method which consists in providing a carrier having a surface of adhesive material adapted to retain abrasive material deposited thereon, applying finely divided abrasive material to said adhesive surface and after deposit of the abrasive, but while the adhesive is not fully set, changing the positions of the individual abrasive particles on said surface by repeatedly subjecting the abrasively coated surface while the adhesive ly to electrical action.

4. In the manufacture of abrasives, the improved method which consists in providing a carrier having a surface of adhesive material adapted to retain abrasive material deposited thereon, depositing finely divided abrasive material on said surface in excess of the amount required to form the desired abrasive coating, removing the excess abrasive after depositing the same and then, while the adhesive is not fully set, changing the positions of the individual abrasive particles on said surface by progressively subjecting the abrasively coated surface to the action of an electrical field.

5. In the manufacture of abrasives, the improved method which consists in providing a carrier having a surface of adhesive material adapted to retain abrasive material deposited thereon, depositing finely divided abrasive material on said surfaces in excess of the amount required to form the desired abrasive coating, removing the excess abrasive after depositing the same and then, while the adhesive is not fully set, changing the positions of the individual abrasive particles on said surface by passing the abrasively coated carrier through an electrical field.

6. In the manufacture of abrasives, the improved method which consists in providing a carrier having a surface of adhesive material adapted to retain abrasive material deposited thereon, depositing finely divided abrasive material on said surface in excess of the amount required to form the desired abrasive coating, removing the excess abrasive after depositing the same and then, while the adhesive is not fully set, changing the positions of the individual abrasive particles on said surface by repeatedly subjecting the abrasively coated carrier to electrical action.

7. In the manufacture of abrasives, the improved method of treating a carrier having a surface coated with abrasive particles, adhesively retained on said surface, which consists in changing the positions of the particles by subjecting the surface while the adhesive is not fully set to the action of an electrical field at a point remote from the point of application of the abrasive.

8. In the manufacture of abrasives, the improved method of treating a carrier having a surface coated with abrasive particles, adhesively retained on said surface, which consists in changing the positions of the particles by repeatedly subjecting progressively the abrasively coated surface while the adhesive is not fully set to electrical action.

9. In the manufacture of abrasives, the improved method of treating a carrier having a surface coated with abrasive particles, adhesively retained on said surface, which consists in changing the positions of the particles by progressivley passing the abrasively coated surface through an electrical field.

10. In the manufacture of abrasives, the improved method of treating a carrier having a surface coated with abrasive particles, adhesively retained on said surface, which consists in changing the positions of the particles by repeatedly passing the abrasively coated surface through an electrical field.

In testimony whereof I have hereunto set my hand.

ELMER C. SCHACHT.

[fol. 656]

4

CERTIFICATE OF CORRECTION.

Patent No. 1,854,071. Granted April 12, 1932, to

ELMER C. SCHACHT.

It is hereby certified that error appears in the printed specification of the above numbered patent requiring correction as follows:- Page 3, line 52, claim 3, before the word "surface" insert the word carrier, and lines 52 and 53, same claim, strike out the words "while the adhesively" and insert the word progressively; and that the said Letters Patent should be read with these corrections therein that the same may conform to the record of the case in the Patent Office.

Signed and sealed this 21st day of June, A. D. 1932.

H. J. Moore,
(Seal) Acting Commissioner of Patents.

[fol. 657]

July 14, 1936. A. THODE 2,047,525

INSULATING METHOD FOR ELECTRIC AND THERMO-TECHNICAL PURPOSES, AND APPARATUS FOR ACCOMPLISHING THE SAME

Filed Sept. 19, 1932

Fig 1

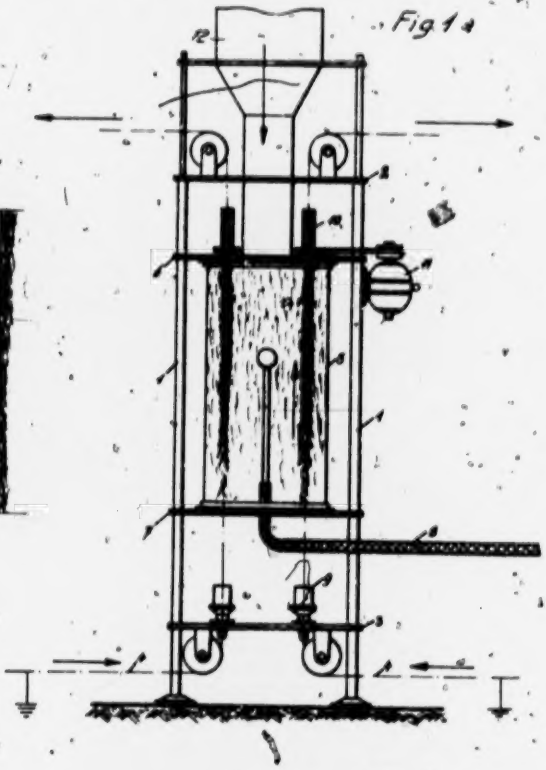

Fig 3

Fig 2

Fig 4

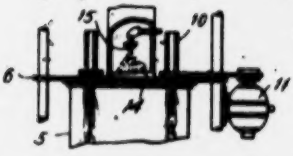

Inventor:

Adolf Thode

[fol. 658]

Patented July 14, 1936 2,047,525

UNITED STATES PATENT OFFICE

2,047,525

INSULATING METHOD FOR ELECTRIC AND THERMO-TECHNICAL PURPOSES, AND APPARATUS FOR ACCOMPLISHING THE SAME

Adolf Thede, Hamburg-Billbrook, Germany

Application September 19, 1933, Serial No. 689,835
In Germany September 18, 1931

24 Claims. (Cl. 91—13)

(Granted under the provisions of sec. 14, act of March 2, 1927; 357 O. G. 3)

For the insulation of electric conductors the whipping method has been hitherto applied, according to which the conductors are whipped with yarns, produced from textile materials, such as cotton, silk, asbestos and others. This method is very complicated and requires time, as from the textile material has first to be produced thread, or, if paper is to be used for insulation, a paper strip has first to be produced from the raw paper material.

To overcome this inconvenience, it has been proposed to use flaky, fibrous material which, with the aid of special devices, is applied on to the conductors as a di-electric or insulative coating. According to a proposed method the flaky material is moved in a continuous, uniform eddy by a circulating air current. The air current conveys the flaky material to cylinders which supply it to the wire to be insulated and which has been previously coated with gum. Owing to the gum, the flocks stick on the wire, distributed as uniformly as possible over the entire length and circumference of the same. The difficulty connected with this insulating method is that the flocks cannot be brought on to the conductors so uniformly that the diameter of the insulation is the same at all points of the wire surface. The speed at which the blowing on of the sticky conductor by an air current saturated with textile fibres takes place can be only limited as, if the speed of the gas or air is increased, the fibres which have already stuck on the wire might be torn away. This happens especially with fibres designed not to stick directly on the conductor but on fibres already covering the conductor, for instance if the thickness of the insulation has to be increased. The method according to the present invention avoids all the inconveniences of the commonly applied methods. It is based on the fact that bodies with similar electric charge (+ or −) repel one another, whereas bodies with opposite charge attract one another. The method is characterized chiefly by the use of high-voltage electric currents for opening and distributing insulating material of any kind.

These currents are further used for applying the insulating material on to the electric conductors. The individual fibres and particles of the material are electrically charged through the pole of a high voltage source so that they deposit on bodies, which are connected to the opposite pole of the high voltage source. The arrangement may be made so that the bodies to be insulated are grounded and that the other pole of the high voltage source is grounded also.

The insulating of the conductor according to this method is carried out much more rapidly (about 25 times as rapid) than the hitherto employed method, and it permits of the simultaneous insulating any desired number of conductors in one operation, which may all be of the same diameter or of different diameters. The insulating layer obtained in this manner is of uniform thickness on all points of the conductors, and it is possible to regulate the thickness of the insulating layer as desired, as the method is carried out in an undisturbed atmosphere, as will be hereinafter explained.

An apparatus employed for carrying out the new method is diagrammatically illustrated by way of example in the accompanying drawing, in which:—

Fig. 1 is a side elevation and

Fig. 2 a top plan view.

Fig. 3 shows a section of a conductor covered, fox-tail like, with insulating material, the covering being not yet smoothed.

Fig. 4 shows a fragmental vertical section of an upper portion of a modified form of the apparatus.

The apparatus consists of uprights 1 connected at the top end and near the lower end by transverse bars or plates 2 and 3, on which pulleys for changing the direction of the conductors 4 are mounted. The uprights 1 carry a cylindrical container 5, made of transparent, insulating material, preferably glass. This container 5 is closed at the top and bottom by cover plates 6 and 7. A sputtering electrode 8 projects from below into the container 5 and represents one pole of the high voltage source. The conductors 4 to be insulated pass through the container 5, and any number of conductors are grouped around the sputtering electrode 8 at a suitable distance from the same. On the lower transverse plate 3 containers 9, filled with adhesive are mounted, through which the conductors to be insulated are passed prior to passing through the container 5. Insulation smoothing devices 10 are mounted on the cover plate 6, one for each conductor 4, these being designed to smooth the insulating material adhering to the conductor as the conductor passes through the center bore thereof. The smoothing devices are rotatively driven from a motor 11. The loose fibrous material is fed to the container 5 through a charging funnel 12 mounted on the cover plate 6.

The method is carried out in that the covering material, for instance textile fibres or paper dust, loosened, for instance, by rapidly rotating brushes, flows through the funnel 12 into the transparent container 8. The insulating material in the container is electrically charged by the influence effect of sputtering electrode 9 connected to the high voltage source. This charging with electrons of similar polarity effects a further loosening of the insulating material as the individual particles repel one another, according to the law that bodies of similar electric charge repel one another. The electrically charged particles possess the tendency to move away from the sputtering electrode, the point of high potential, in outward direction towards the zone of low potential (phenomenon of the electric wind). This tendency is especially favorable for this method. The particles are thereby thrown against the adhesively coated conductors 4 to be insulated which are conducted through the container at a suitable distance from the sputtering electrode 9. These conductors, being grounded, or connected to the other pole of the high voltage source, attract with high velocity the ionized particles of insulating material. These particles, shot against the bare conductors, cover the same in foxtail-like formation. The foxtail-like coverings are then smoothed as they are drawn through the smoothers 10. The conductors are then perfectly insulated.

The conductors 4, before they enter into the container 8, are passed through the containers 9, so that they are coated with a suitable adhesive, whereby the adhesion of the particles of insulating material to the conductor is facilitated.

The coating of the conductors with adhesive may however be effected in that the adhesive is introduced in the form of mist 16 (Fig. 4) from a nozzle 18 into the container 8. The mist particles are then submitted to the same law as the fibre particles, that is, they are electrically charged and fly on to the conductors to be insulated. As the adhesive mist is also distributed between the particles of insulating material, the cover on the conductors consists of a mixture of adhesive and fibre particles. It is not absolutely necessary to coat the conductors with adhesive, as the particles of insulating material adhere well to the conductors when the current has been cut off, as, owing to the high speed at which they flow towards the conductors, they intermix and become matted so that they form a dense cover. The thickness of the insulating layer can be regulated very accurately and in a simple manner by varying the strength of the electrical potential, as with increasing potential also the force which separates the particles of the insulating material increases, and also the speed with which the particles flow towards the conductors. If the electrical potential decreases, the reverse condition occurs. A further possibility of regulation consists in altering the speed with which the conductors pass through the container 8 filled with electrically loaded fibres and along the sputtering electrode 9. At higher speed the layer of insulating material becomes thinner and it becomes thicker at lower speed. Another possibility of regulation is to regulate or alter the quantity of fibres fed into the container in a unit of time. Conductors of different thickness can be insulated at the same time, if for every conductor a drive is provided which can be regulated, as the speed with which the conductors are moved through the container 8 is different according to the thickness of the conductor and of the insulation to be produced. In order to attain a uniform distribution of the insulation over the entire circumference of conductors, that is also on the side of the same turned away from the sputtering electrode 9, driving gears of known type, not shown on the drawing, are provided, which effect the speed of rotation of the conductors. An advantage of the method not to be underestimated is, that the insulating material is completely used up, as the particles are whirled up continually as long as they remain ionised and as they give up their charge only when they come in contact with the conductor. Another chief advantage of the method is that the covering of the conductors with fibrous material is carried out in the closed container 8, in an undisturbed atmosphere.

The insulating speed can be increased as desired by increasing of the voltage.

According to this method not only wires or stranda, but also shaped elements of any form can be insulated.

High voltage direct current as well as alternating current can be used.

I claim:—

1. A method of electrically depositing particles of insulating material on an electrical conductor; consisting in disposing the conductor in the particles, charging the conductor at a certain potential, charging the particles at a different potential, and moving the charged particles to the conductor.

2. A method of coating an electrical conductor with particles of insulating material; consisting in disposing the conductor in the particles, applying a thin liquid, settable adhesive coat to the conductor, charging said conductor electrically at a certain potential, charging the particles at a different potential, and moving the charged particles on to the settable coat, so that the latter may dry to hold the particles in position.

3. A method of applying a coat of insulating particles to an electrical conductor; consisting in disposing the conductor in a mass of particles of insulating material and wet adhesive material, charging the conductor electrically at a low potential, charging the particles at a high potential, moving some of the insulating and adhesive charged particles into attached relation on the conductor, and removing the latter from the mass.

4. A method of applying a coat of insulating particles to an electrical conductor; consisting in disposing the conductor in a mass of the particles of insulating material and liquid adhesive material charging the conductor electrically at a low potential, charging the particles at a high potential, whereby sufficient of said particles may be attracted to the conductor to form a relatively large coat thereon, removing the coated conductor from the mass, so that the adhesive material may dry, and smoothing the attracted particles on the conductor as it leaves the mass whereby to provide a smooth surface on the coat.

5. A method of applying insulating particles to the surface of an electrical conductor; consisting in, rendering the surface adhesive, disposing the conductor in a mass of the particles, charging the conductor electrically at a certain potential, charging the particles at a different potential whereby some of the particles may fly to the conductor and form a coat on said surface, removing the conductor from the mass, and smoothing the surface of the coat.

[fol. 660]

6. An apparatus for coating movable electrical conductors comprising in combination a container of insulating material, the conductors being movable through the container in an annular series; means for delivering particles of fibrous coating material into the container around the conductors; said container having therein a central electrode which is adapted to deliver therefrom a high potential charge; means for delivering a thin adhesive covering to the conductors as they move into the container, said conductors adapted to be charged electrically at a low potential; so that as the charge is delivered from said electrode the particles may also be charged, whereby said particles may be attracted to the conductors to coat the latter, and means for smoothing the coated conductors as they leave the container.

7. An apparatus comprising means for charging, with high potential, small particles of insulating material; and means for charging an adhesive-coated wire conductor, near said particles, with lower potential.

8. An apparatus comprising means for providing a closed insulated space; means for supporting a conductor in said space; means for feeding, into said space, separated small particles of insulating material and a plurality of adhesive particles; means establishing a charge of high potential in the space; and means for charging said conductors with a lower potential.

9. An apparatus comprising means providing a laterally closed insulated space; means for holding a conductor in said space; means for simultaneously feeding into space a plurality of separated small particles of insulating material and adhesive particles separated in the form of a mist; means for establishing a charge of high potential in said space; means for charging said conductor with potential opposite in sign to that of said charge.

10. An apparatus comprising means for providing a laterally closed and insulated space; means for continually feeding a plurality of spaced conductors upwardly through said space; means for applying a settable adhesive to and around each conductor before it enters said space, means for feeding into said space a plurality of small particles of insulating material; means for establishing a charge of high potential in the midst of said space, whereby said particles are charged with charges of like sign, and are therefore further separated from each other and driven from said charge; means for charging said conductors with potential lower than that of said charge; whereby the particles are drawn at high speed strongly to said conductor and adhesive and permanently adhered to the adhesive and to each other, thereby distributing the particles around the conductors within a fox-tail-like formation; and means smoothing said formation around the conductor as latter passes from said space, thereby forming an effective insulating coating.

11. An apparatus comprising means for providing a laterally closed and insulated space; means for continually feeding a plurality of spaced wire conductors upwardly through said space; means for feeding into the top of said space a plurality of separated small particles of insulating material; means for introducing into said space, simultaneously with the particles, a plurality of adhesive particles separated in the form of a mist; means for establishing a charge of high potential in the midst of said space substantially equidistant from said conductors, whereby said particles are charged with charges of like sign, and are therefore further separated from each other and driven from said charge; means for charging said conductors with potential opposite in sign to that of said charge, whereby the particles are drawn at high speed strongly to said conductor and adhesive and are permanently and evenly adhered to the adhesive and to each other, thereby distributing the particles evenly around the conductors within a fox-tail-like formation; and means for smoothing said formation tangentially around each conductor as latter passes from said space, thereby forming an effective insulating coating.

12. A method comprising charging, with high potential, small particles of insulating material; and charging an adhesive-coated wire conductor near said particles with a lower potential.

13. A method comprising charging with high potential separated small particles of insulating and adhesive material; and charging a wire conductor, near said particles, with a lower potential.

14. A method comprising, providing a closed insulated space; supporting a conductor in said space; feeding, into said space, separated small particles of insulating material and a plurality of adhesive particles; establishing a charge of high potential in the space; and charging said conductors with a lower potential, thereby adhering the particles around the conductor without the necessity of first coating the conductor.

15. A method comprising continually feeding a plurality of spaced conductors of different diameters upwardly through a laterally insulated and closed space of quiet air; charging insulating particles in said space with high potential and the conductors with lower potential.

16. A method comprising; providing a laterally closed and insulated space; continually feeding a plurality of spaced wire conductors upwardly through said space; feeding into the top of said space a plurality of separated small particles of insulating material; introducing into said space, simultaneously with the particles, a plurality of adhesive particles separated in the form of a mist; establishing a charge of high potential in the midst of said space substantially equidistant from said conductors, whereby said particles are charged with charges of like sign, and are therefore further separated from each other and driven from said charge; charging said conductors with potential opposite in sign to that of said charge, whereby the particles are drawn at high speed strongly to said conductor and adhesive and are permanently and evenly adhered to the adhesive and to each other, thereby distributing the particles evenly around the conductors within a fox-tail-like formation; and smoothing said formation tangentially around each conductor as latter passes from said space, thereby forming an effective insulating coating.

17. A method comprising continually feeding a plurality of conductors upwardly through a laterally insulated and closed space of quiet air; applying a settable adhesive to the conductors before they leave said space; loosening, separating and feeding into the top of said space a plurality of small particles of fibrous insulating material, whereby said particles will sink into the space; establishing a charge of high potential in the midst of said space substantially equidistant from said conductors, whereby said particles are charged with charges of like sign and therefore further separate from each other and

driven by the charge from said charge; simultaneously, with the establishment of said charge, charging said conductors with a potential opposite in sign to that of said charge; whereby the particles are drawn at high speed strongly to said conductors entirely by the force of the charges and adhere to the adhesive.

18. A method as in claim 17 including the step of applying the suitable adhesive to and uniformly all around the conductor before it enters said space.

19. A method as in claim 17 including the step of smoothing said formation tangentially around the conductor as latter passes from said space, thereby forming an adhesive insulating coating.

20. A method as in claim 17 including the steps of regulating the thickness of said formation by regulating the voltage of the charge, the speed of feed of the conductors, and the rate of supply of the insulating particles; and continuing said method until all of the fed particles are adhered.

21. In the art of covering wire conductors with insulation, a method which comprises supporting a wire conductor; simultaneously applying adhesive and small particles of fibrous insulating material around the conductor; and matting and adhering together the fibrous particles around the conductor as they are applied.

22. In the art of covering wire conductors with insulation, a method which comprises supporting a wire conductor; simultaneously applying adhesive and a plurality of separated small particles of insulating material around the conductor; adhering together the particles around the conductor in a fastail like formation without first coating the conductor; and smoothing said material, thereby compacting said formation.

23. In the art of covering wire conductors with insulation, a method which comprises supporting a wire conductor; simultaneously feeding into space near said conductor, separated small particles of fibrous insulating material and a plurality of adhesive particles; establishing a charge of high potential in the space; and charging said conductors with a lower potential; thereby causing matting and adhering together the fibrous particles around the conductor without the necessity of coating the conductor.

24. In the art of covering wire conductors with insulation, a method which comprises providing a closed space; supporting a wire conductor in said space, feeding into said space, separated small particles of insulating material and a plurality of adhesive particles; establishing a charge of high potential in the space; and charging said conductors with a lower potential; thereby causing the adhering of the fibrous particles around the conductor in a fastail like formation; and smoothing said material, thereby compacting said formation.

ADOLF THEXE.

[fol. 662]

July 20, 1937. L. P. MILLER 2,087,2[illegible]0

HOMOGENEOUS FILED SURFACE

Filed April 18, 1935

Fig. 1.

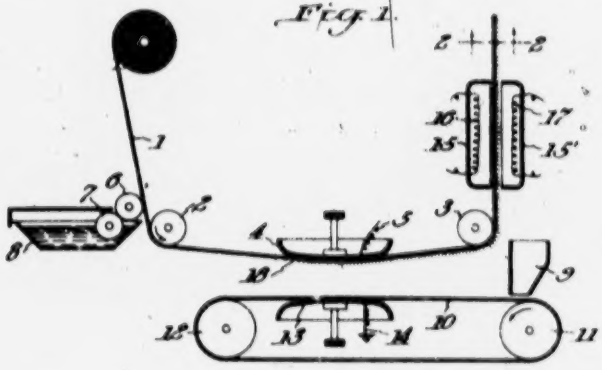

Fig. 2.

Inventor
Louis P. Miller

By Potter, Pierce & Schaffle.

Attorneys

[fol. 663]

Patented July 20, 1937

2,087,260

UNITED STATES PATENT OFFICE

2,087,260

HOMOGENEOUS PILED SURFACE

Louis P. Miller, Brooklyn, N. Y., assignor to Research Corporation, New York, N. Y., a corporation of New York

Application April 13, 1935, Serial No. 17,136

13 Claims. (Cl. 91—68)

This invention relates to piles and piled surfaces and their manufacture, and is directed particularly to a pile comprising attenuated elements and an indurated binding substance with which they are combined into a homogeneous structure, and to a method of making the same.

The invention is especially valuable when it is included in the method of piling surfaces comprising: coating the surface to be piled with adhesive, placing the coated surface in an electric field, and supplying fibers or other pile forming elements to the region of the electric field, that they may be oriented and deposited on the adhesive covered surface by the action of the electric field.

The principal object of the invention is to form a pile of attenuated particles, such as rayon fibers or "flocks", wherein one end of each fiber is incorporated into an indurated material and makes a homogeneous structure with it.

Another object of the invention is to incorporate one end of each of a group of fibers into an indurable binding material to form a pile by the use of a solvent common to fibers and binding material.

Another object of the invention is to so control the softening action of a solvent included in an indurable binding material on the fibers to be attached thereto in the forming of a pile that one end of each fiber will be amalgamated with the binding material to make a common substance with it.

A specific object of the invention is to make a pile of cellulose derivative fibers by fastening one end of each fiber into the pile structure with an adhesive, including a volatile solvent for the cellulose derivative, such as acetone, and then driving out the solvent and indurating the adhesive.

A further specific object is the production of a pile of attenuated elements upon a surface by coating the surface with an adhesive including a solvent for the elements, orienting the elements and projecting them endwise with an electric field into the adhesive, holding them in oriented position until the solvent has softened the imbedded ends of the elements and incorporated them into the adhesive to make a homogeneous structure with it, and then indurating the adhesive.

The products obtained from a realization of the above objects and such other objects as will be pointed out in the following exposition are characterized by the strong attachment between the individual fibers or elements and the common binding material. When very fine fibers, such as rayon flocks, are projected endwise, for instance under the influence of an electric field, into an adhesive, they do not penetrate deeply, as a rule, and are not always wetted sufficiently by an ordinary adhesive to produce a strong bond between adhesive and fiber. The result is a pile with an appreciable number of elements which will become dislodged when the pile is brushed or given other rigorous handling. An adhesive with a constituent that is a solvent for the fibers, on the other hand, definitely wets, and partially dissolves, each fiber that contacts it for any length of time, and the result is a blending or incorporating of fibers and adhesive into a homogeneous whole. Upon evaporation of the solvent or solvents and induration of the adhesive a very strongly bonded pile results.

In the following description of the invention reference is had to the appended drawing in which:

Fig. 1 is a diagrammatic view, in side elevation, of apparatus useful in practicing the method of the invention; and

Fig. 2 is a fragmentary cross-sectional view of the product made with the apparatus shown in Fig. 1 taken on line 2—2 of that figure.

In Fig. 1, numeral 1 identifies a sheet material, for example a sheet of closely woven cloth, a surface of which is to be piled. Sheet 1 is moved over rolls 2 and 3 in the direction indicated and in doing so passes under electrode 4 which is insulated from ground and maintained at a high potential with respect to ground by connecting it to a source (not shown) of high voltage, preferably unidirectional, current by conductor 5. A suitable adhesive is applied to the under surface of sheet 1 by rolls 6 and 7 in the manner readily appreciated by those familiar with the coating art. The adhesive is held in container 8, which has a close fitting top, except for the projecting area of roll 6, to minimize the losses of solvent by evaporation.

The attenuated elements, such as textile fibers, used in building the pile are distributed by means 9 upon belt 10 moving over rolls 11 and 12. Belt 10 may be of metal and held at ground potential, or it may be of semi-conducting or insulative material, in which case it is passed over an electrode 13, grounded at 14. In either case a strong electric field that terminates on electrode 4 exists adjacent the top of belt 10; and this electric field, which can be considered as existing between electrodes 4 and 13, lifts the fibers from the surface of belt 10 and di-

[fol. 664]

posits them on the coated surface of sheet 1 in oriented position perpendicular to that surface. Sheet 1 moves at a rate which permits the pile to form with the desired density. After deposition the piled surface is moved through a heating chamber 15, 15' containing electrical heating elements 16 and 7 wherein the solvents are driven from the adhesive, to be collected for reuse if economically advisable, and the adhesive hardened to the desired degree.

The several steps recommended in electrically depositing fibers are disclosed in detail in U. S. patent applications Serial No. 692,301, of A. F. Meston filed October 4, 1933, and Serial No. 699,456, of H. F. Wintermute filed Nov. 23, 1933.

Fig. 2 shows a portion of the product of the invention in which fabric 21 corresponds to sheet 1 of Fig. 1. A layer of binding material 22 is attached to the surface of cloth 21, and imbedded in or joined with the binding material are fibers 23. Binding material 22 had been applied to cloth 21 as a viscous adhesive composition and throughout the layer of adhesive a substance had been distributed which had a solvent or softening effect upon fibers 23. The solvent softened or partially dissolved the ends of the fibers projecting into or contacting the adhesive and brought about an intimate association of the materials comprising fibers and adhesive as shown at 24, with the result that upon driving out the solvent and indurating the adhesive the fibers were autogenously welded to the binding material in what may be termed a homogeneous whole.

I have obtained very satisfactory results with a solvent common to both binding material and fibers. For example, in depositing cellulose acetate rayon fibers, I have used acetone in an adhesive composition comprising cellulose acetate, a relatively high boiling point solvent, such as ethylene glycol mono-methyl ether ("Cellosolve") and a plasticiser. Deposition with this combination under conditions which controlled the evaporation of the acetone and the surface penetrativeness of the adhesive have produced piles with very strongly attached fibers. The deposition apparatus is preferably enclosed in a chamber when a highly volatile solvent, such as acetone, is used and it has been found advisable to control the gaseous contents of the chamber as to temperature and other vapor pressure conditions and to guard against possible explosive mixtures. The preferred viscosity and surface setting characteristics of the adhesive are readily discernible through trial and observation.

Other cellulose derivatives, such as the esters and ethers of cellulose, as well as other fibrous substances capable of being dissolved or softened by an ingredient of the adhesive composition, may be used in place of cellulose acetate.

While the invention has been particularly described for the purpose of illustration in connection with the production of a product including a fabric backing, other backings, such as sheets of preformed indurated material, may be used, or the fibers may be deposited on a layer of adhesive on a temporary backing, being later removed from the temporary backing and used as such or applied to a permanent backing.

It will be appreciated by those familiar with the characteristics of adhesives and textile and other fibers that many embodiments of my invention are possible. What I wish to emphasize as the broad conception of the invention is the breaking down of the surface of the fiber where it contacts the binding material so that the definite interface which ordinarily separates two such substances is, to an appreciable degree, eliminated and the fiber becomes integrally united with the binding material.

I claim:

1. A method of making pile-surfaced material which comprises depositing attenuated fibers of a cellulosic derivative in a layer of an adhesive composition including a substance having a solvent action on said cellulosic derivative, and indurating the adhesive layer.

2. A method of making pile-surfaced material which comprises depositing attenuated fibers of a cellulose ester in a layer of an adhesive composition including a substance having a solvent action on said cellulose ester, and indurating the adhesive layer.

3. A method of making pile-surfaced material which comprises depositing attenuated fibers of cellulose acetate in a layer of an adhesive composition including a substance having a solvent action on said cellulose acetate, and indurating the adhesive layer.

4. A method of making pile-surfaced material which comprises depositing attenuated fibers of a cellulosic derivative in a layer of an adhesive composition including a similar cellulosic derivative and a substance having a solvent action on said cellulosic derivative, and indurating the adhesive layer.

5. A method of making pile-surfaced material which comprises depositing attenuated fibers of a cellulosic derivative in a layer of an adhesive composition including cellulose acetate and a substance having a solvent action on said cellulosic derivative, and indurating the adhesive layer.

6. A method of making pile-surfaced material which comprises forming a layer of an adhesive composition comprising a cellulosic derivative, a volatile solvent therefor, a high boiling solvent, and a plasticiser, depositing thereon attenuated fibers of a similar cellulosic derivative and indurating the adhesive layer by removing the volatile solvent.

7. A method of making a pile-surfaced material which comprises forming a layer of an adhesive composition comprising cellulose acetate, acetone ethylene glycol mono-methyl ether and a plasticiser, depositing thereon attenuated fibers of cellulose acetate and indurating the adhesive layer by removing the acetone.

8. A pile-surfaced sheet material comprising a layer of indurated adhesive substance and a pile consisting of attenuated fibers embedded at one end in said layer and physically homogeneous therewith.

9. A pile-surfaced sheet material comprising a layer of indurated adhesive substance and a pile consisting of attenuated fibers embedded at one end in said layer and physically and chemically homogeneous therewith.

10. A pile-surfaced sheet material comprising a layer of indurated cellulosic substance and a pile consisting of attenuated fibers of a cellulose derivative embedded at one end in said layer and physically homogeneous therewith.

11. A pile-surfaced sheet material comprising a layer of indurated plastic composition including cellulose acetate and a pile consisting of attenuated fibers of cellulose acetate embedded at one end in said layer and physically homogeneous therewith.

12. A pile-surfaced sheet material comprising a backing, a layer of indurated adhesive substance thereon and a pile consisting of attenuated fibers embedded at one end in said layer and physically homogeneous therewith.

13. A pile-surfaced sheet material comprising a backing, a layer of indurated plastic composition including cellulose acetate thereon and a pile consisting of attenuated fibers of cellulose acetate embedded at one end in said layer and physically homogeneous therewith.

LOUIS P. MILLER.

[fol. 666]

March 28, 1939. A. F. MESTON ET AL 2,152,077

PRODUCTION OF FILED SURFACES IN PATTERN FORM

Filed Feb 6, 1935 4 Sheets-Sheet 1

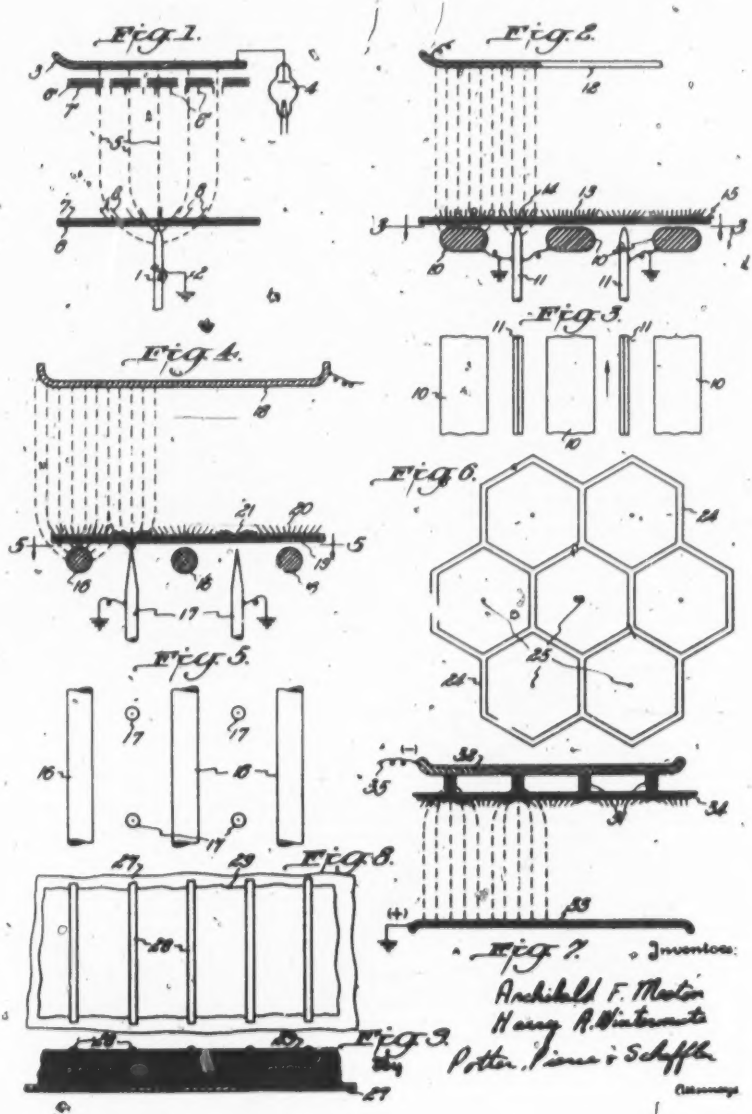

Inventors:
Archibald F. Meston
Henry A. Winternute
Potter, Pierce & Schaffle
Attorneys

March 28, 1939. A. F. MESTON ET AL 2,152,077

PRODUCTION OF PILED SURFACES IN PATTERN FORM

Filed Feb. 6, 1935. 4 Sheets-Sheet 2

Fig. 10.

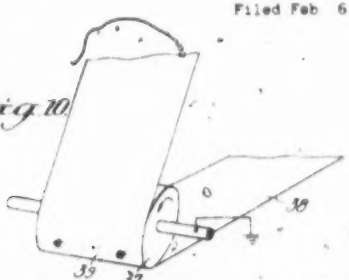

Fig. 11.

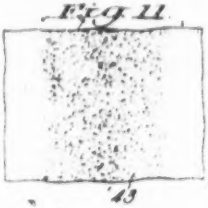

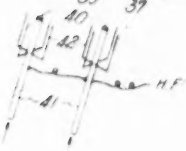

Fig. 12.

Fig. 13.

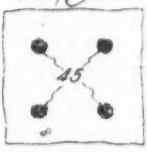

Fig. 14.

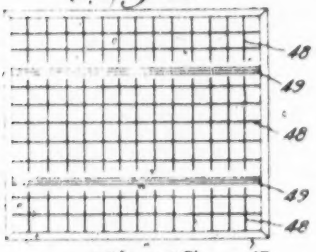

Fig. 15.

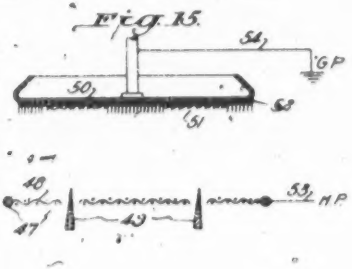

Fig. 16.

Fig. 17.

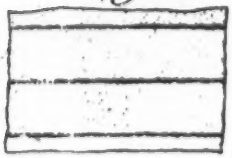

Fig. 18.

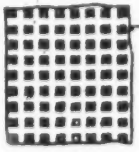

Inventors
Archibald F. Meston
Harry A. Wintermute

Potter, Pierce & Schaffer
Attorneys

[fol. 668]

March 28, 1939. A. F. MESTON ET AL 2,152,077

PRODUCTION OF FILED SURFACES IN PATTERN FORM

Filed Feb 6, 1935 4 Sheets-Sheet 3

Fig. 19.

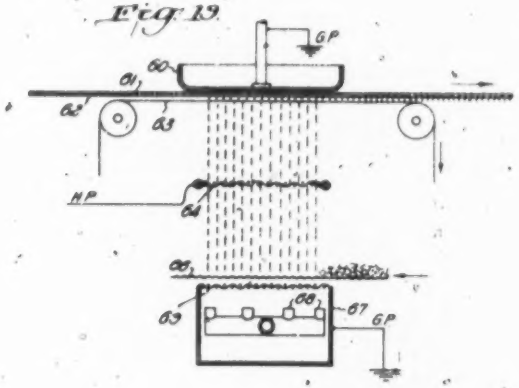

Fig. 20.

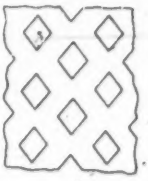

Fig. 21.

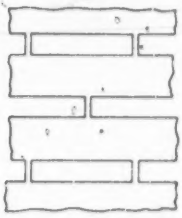

Fig. 23.

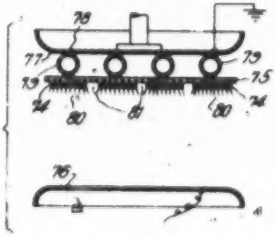

Fig. 22.

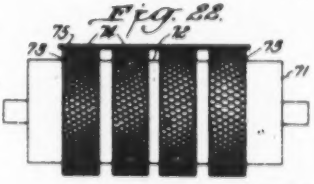

Inventors
Archibald F. Meston
Harry A. Wintermute
By Potter, Pierce & Schaffer
Attorneys

[fol. 669]

March 28, 1939. A. F. MESTON ET AL 2,152,077

PRODUCTION OF FILED SURFACES IN PATTERN FORM

Filed Feb. 6, 1935 4 Sheets-Sheet 4

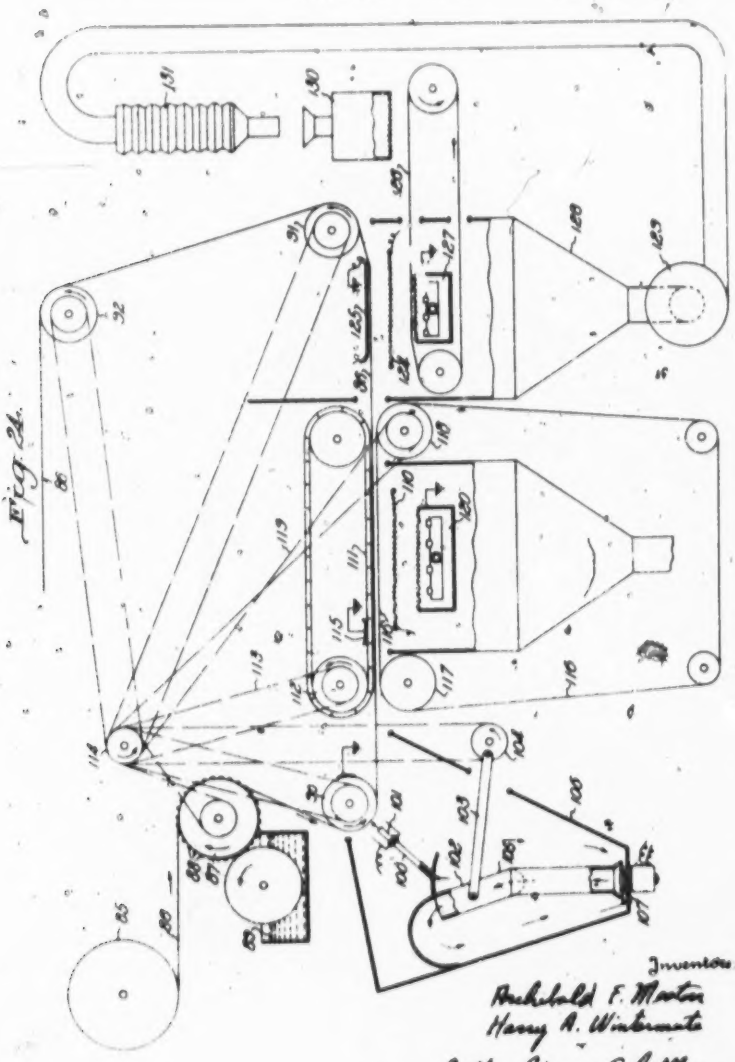

Fig. 24.

Inventors
Archibald F. Meston
Harry A. Winkemata
By Potter, Pierce & Schaffer
Attorneys

[fol. 670]

Patented Mar. 28, 1939 2,152,077

UNITED STATES PATENT OFFICE

2,152,077

PRODUCTION OF PILED SURFACES IN PATTERN FORM

Archibald F. Morton, Middlesex, and Harry A. Wintermute, Plainfield, N. J., assignors, by mesne assignments, to Bohr-Manning Corporation, a corporation of Massachusetts

Application February 6, 1936, Serial No. 5,[illegible]

15 Claims. (Cl. 41—30)

This invention relates to coating and/or decorating surfaces with simulated piles in pattern form. It has to do in particular with apparatus and methods for making and controlling a non-uniform electric field used in the deposition of elongated particles on adhesive covered surfaces for the purpose of effecting a topical arrangement of the particles on the surfaces, for example, in pleasing patterns.

Fibers, such as rayon flocks, can be deposited in oriented position upon an adhesive covered surface if the surface is positioned in an electric field and fibers are introduced into the electric field in unrestrained manner. The conditions required for satisfactory deposition of fibers in the piling of surfaces are described in expanding applications Serial No. 690,[illegible], L. P. Miller, filed Sept. 20, 1933; Serial No. 692,[illegible], A. F. Morton, filed Oct. 4, 1933; and Serial No. 690,[illegible], H. A. Wintermute, filed Nov. 22, 1933.

The piles made with the apparatus and methods used and described in the applications just mentioned are quite uniform in composition and appearance. Most of the fibers stand erect, perpendicular to the surface, making piles of monotonous evenness from a decorative standpoint. It has now been found that by suitable control of the electric field by means of which the fibers are deposited, and particularly by the use of a deliberately warped or discontinuous electric field, pleasing variations and definite patterns can be obtained in the pile.

Apparatus useful in carrying out the invention and several embodiments of the invention, including novel methods and products, are hereinafter described with particular reference to the appended drawings, in which:

Fig. 1 is a diagrammatic side view of complementary electrodes and an electric field therebetween in which fibers are being attached by the forces prevailing in a non-uniform portion of the field;

Fig. 2 is a fragmentary view in side elevation of an assembly of electrode elements as used in the deposition of fibers in accordance with the invention;

Fig. 3 is a fragmentary plan view of what is shown in Fig. 2 taken at 3—3;

Figs. 4 and 5 are fragmentary views comparable to Figs. 2 and 3, respectively, showing the utilization of somewhat different elements in the electrode structure used with the invention;

Fig. 6 is a plan view of another arrangement of electrode elements useful in setting up a non-uniform field in accordance with the invention;

Fig. 7 illustrates in side view the forming of a patterned pile on a base sheet with still another arrangement of electrodes;

Figs. 8 and 9 are fragmentary plan and side views, respectively, of another electrode assembly that can be used advantageously with the invention;

Fig. 10 indicates, perspectively, apparatus including air jets useful in applying fibers to surfaces in accordance with the invention;

Figs. 11, 12 and 13 show with plan views, the types of patterns which can be obtained with the apparatus illustrated in Fig. 10;

Fig. 14 is a plan view of a foraminous electrode, comprising corona forming elements, useful in practicing the invention;

Fig. 15 shows diagrammatically in end elevation, apparatus for utilizing the electrode shown in Fig. 14;

Figs. 16, 17 and 18 are views of fragmentary portions of products made with reticulated electrodes;

Fig. 19 shows diagrammatically, in side elevation, apparatus for depositing fibers in pattern formation, by utilizing a moving field stencil;

Figs. 20 and 21 show typical forms of field stencils used with the invention;

Fig. 22 illustrates, in side view, an adhesive applying roll with cut-away portions;

Fig. 23 shows, in sectional elevation, an electrode assembly useful in depositing fibers on a surface coated with the roll shown in Fig. 22; and

Fig. 24 is a diagrammatic view in side elevation of apparatus that permits the utilization of the various electrodes and other means illustrated in the various figures and the carrying out of the several methods of the invention to be hereinafter described.

In Fig. 1, numerals 1 and 3 identify electrodes between which an electric field has been established; electrode 1 is grounded as indicated at 2 and electrode 3 is insulated from ground and connected to a source of high potential constant polarity current represented by tube rectifier 4. The so-called lines of force of the electric field represented by lines 5 leave the electrodes perpendicular to the surface. Electrode 1 has a pointed or rounded top and the lines of force curve [illegible] out in the manner shown as they [illegible] area presented by the top of the [illegible] opposing or complementary electrode 3, [illegible] other hand, has a flat surface upon which the lines of force terminate and the lines

of force in the vicinity of this electrode are straight, parallel, and uniformly distributed.

When a non-conducting sheet 6 covered with adhesive 7 is positioned between electrodes 1 and 2 and short fibers are freely suspended in the electric field the fibers are oriented and attached to the adhesive covered sheet parallel to the lines of force passing through the sheet at the point of attachment. Once attached they maintain the position of original attachment and resist realignment by forces that may be applied subsequently. When the sheet to be piled with fibers is placed in the position marked 6', the fibers are attached in the positions 8', 8' and a uniform pile of upright fibers is obtained. But if a sheet is held against, or a short distance from, electrode 1, the fibers are attached at angles to the perpendicular as indicated at 8, 8 because of the inclined positions of the lines of force 9 in this region of the electric field. For instance, the field near a point causes the fibers to become arranged like the petals of a flower.

In Figs. 2 and 3, the electrode elements over which the adhesive covered sheet 16 is positioned while being piled comprises members 10 with a more or less extended top surface and members 11 with very restricted or edged top surfaces. The complementary electrode 12 is preferably flat or has an extended surface. The arrangement of the fibers in the pile made with the electric field between electrode elements 10 and 11 and electrode 12 is shown in Fig. 2. The fibers 13 over the extended portions 10 are deposited in erect position except perhaps over the edges of elements 10, while the fibers 14 over edges 11 are deposited in the inclined positions shown and provide a striped effect. This pattern can be made while the sheet is moving in the direction of the arrow in Fig. 3, but if it is desired to have the stripes extend crosswise of the sheet, the electrode elements 10 and 11 must move at the same speed as the sheet.

In Figs. 4 and 5 the electrode assembly which influences the deposition of the fibers is made up of bars 16 and pointed members 17. Complementary electrode 18 has a flat extended surface. The pile formed with these electrode elements, assembled as shown, comprises parallel stripes with spots between them, the stripes being formed of fibers 20 deposited over rods 16 perpendicular to sheet 19 except at the edges and the spots being formed of fibers 21 which are deposited over points 17 in inclined positions. The smaller the diameter of rods 16 and the closer these are to the sheet 19 being piled, the more the fibers at the edges of the stripes lean outward and set off the stripes, and the closer points 17 are to sheet 19 the more pronounced is the inclination of the fibers in points 21.

By varying the relative positions of the electrode elements in Figs. 4 and 5 the pattern formed will present various effects. The electrical connections can be varied also. It will be noted that while elements 10 in Fig. 2 are grounded, elements 16 in Fig. 4 are not connected to ground, but are allowed to electrically "float" on insulating supports (not shown) and to take the voltage resulting from their position in the electric field. If the sheet being piled is held stationary during the deposition of the fibers the pattern will comprise stripes with dots between, but if the sheet is moved during deposition the electrode elements, at least points 17, must move at the same speed as the sheet or streaks will result in the pattern over the points.

Fig. 8 is a plan view of an assembly of electrode elements not unlike the assembly shown in Fig. 5, but in Fig. 8 the bars (similar to those marked 16 in Fig. 5) making up member 24 have been joined together to form a single continuous element. Points 25, one of which is positioned in the center of each individual hexagon, have been found to alter the electric field in such manner that the pile deposited by it comprises hexagon figures of unusual interest. The fibers are inclined at various angles and when looking at the pile from first one and then another position the sheen changes, displaying many fragments of hexagons, some lustrous and some of which are dull. Of course, to provide a closed pattern like the one made with the electrode of Fig. 6, the electrode must participate in any movement undergone by the surface being piled, as will be described, for example, in connection with Fig. 24.

In Fig. 7, elements 31 are strips of insulating material, for instance, of hard rubber or phenol condensation products, attached to a conducting plate 32. Dielectric material with a specific inductive capacity several times that of air, examples of which are porcelain, mica or "Bakelite", when placed in an electric field, will locally concentrate the lines of force in the field in the vicinity of the pieces of dielectric. The arrangement shown in Fig. 7 has conducting plate 32 connected through conductor 35 to a source of unidirectional current at a potential of, say, 70,000 volts above ground. Complementary electrode 33 is positioned some 4 inches below member 32 and is maintained at ground potential. Elements 31 are, therefore, positioned in the strong electric field that exists between electrodes 32 and 33 and tend to concentrate the lines of force as they approach electrode 32.

Now if an adhesive covered surface, as sheet 34, that is not conducting, is placed just in front of elements 31 and fibers are suspended in the electric field above electrode 33, or distributed over the surface of electrode 33, many of the fibers will be raised and oriented by the electrical field and attracted to electrode 33. The fibers will move with their long axis parallel to the electric lines of force and become attached to the adhesive covered under surface of sheet 34 in the inclined positions shown. In this embodiment of the invention the electric field is warped by placing insulating members of sharp curvature or limited area before a conducting member, preferably a simple member of extended area, whereas in the apparatus illustrated in Figs. 1, 2, 4 and 6, warped fields are established by providing conducting elements of sharp curvature and limited area. The insulating strips 31 in Fig. 7 can be formed into geometrical figures, letters and the like, thus permitting a wide variety in the patterns formed.

Figs. 9 and 9 illustrate another electrode structure comprising insulating material used with certain embodiments of the invention. It is made up of a conducting base plate 37, conducting elements 38, here shown as narrow strips with rounded tops, and dielectric material 39 between the strips. Electrodes of this construction give very striking results. The sheet to be piled is placed parallel to the top surface of material 39 and touching or closely adjacent the top (exposed) edges of members 38 and a complementary electrode is positioned at a proper distance—

[fol. 672]

2 to 3 inches, depending upon conditions—above 20 as electrode 19 is positioned above members 16 in Fig. 2. The pile deposited when a strong electric field is established between the electrodes shows very pleasing shaded stripes, probably due to peculiar disturbances in the electric field produced at top of electrode 20 where they emerge from insulating material 24. The arrangement of the conductive members with relation to the insulating material has been found to have a considerable effect on the patterns produced. With the electrode shown in Figs. 6 and 8, very good patterns have been obtained with conductive edges 20 projecting about $\frac{1}{32}$ to $\frac{1}{16}$ inch above the surface of dielectric filler 24.

In these embodiments of the invention shown in Figs. 1 to 9, inclusive, the controlling electrode, that is the electrode influencing the pattern in the pile most greatly, is placed just back of the sheet or other member, the surface of which is to be piled. The adhesive coating is placed on the side of the sheet away from the controlling electrode and faces the complementary electrode which furnishes a surface upon which the other end of the electric field terminates. For example, in Fig. 4, elements 16 and 17 comprise the controlling electrode, member 18 is the complementary electrode, and 19 is the sheet being piled with the adhesive coating on the side of the sheet away from electrode 16, 17. Figs. 6, 8 and 9 show no complementary electrodes, but it is to be understood that in using the controlling electrodes shown in these figures, suitable opposing or complementary electrodes are also used. The electrodes can be positioned so that the fibers move downward to become attached to the coated surface, as in Fig. 2, or the electrodes can be arranged to cause the fibers to move upward as in Fig. 7. The latter arrangement, or an arrangement with vertically positioned surfaces, is advantageous because such arrangements make easy the jarring of loose and poorly attached fibers from the sheet during the piling operation.

The electrode farthest from the sheet is not of such contour, usually, that it influences the pattern in the pile and is often made as a simple, flat, non-discharging surface. But as will be explained hereinafter, the electrodes away from the sheet to be piled can greatly influence the deposition of the fibers comprising the pile.

The sheet to be piled in Fig. 10 is positioned adjacent an electrode of smooth contour, in this instance, a roll 27 and screen-forming complementary electrodes 28 are responsible for the pattern effect in the pile. It has been found that if the fibers to be electrically deposited are introduced through a tube about which corona discharges are present, desirable results in patterned piles can be obtained. In Fig. 10, sheet 29 travels about a grounded roll 27 which preferably turns to avoid friction and supports an adhesive covered surface 30 to electrodes 28, each made up of a tube 31 and discharge points 32. It has been found that if wire points 32 are bent at right angles and another fibers are blown through tubes 31 and the tubes are connected to a source of unidirectional high potential current, the fibers become positioned as they are deposited. Such a result is shown at 33 in Fig. 11. With points 32 attached to and arranged about high potential tubes 31, the fibers are concentrated locally as illustrated in Figs. 10 and 11. If sheet 29 moves while electrodes 28 are stationary, but continuously depositing fibers, stripes 34 are formed. If the fibers are deposited only while sheet 29 is stationary, or while it is moving at the same speed as electrodes 28 are caused to move, spots are formed such as those marked 35 in Fig. 12. Other factors controlling the pattern produced are the size of the tubes or nozzles, the velocity of the air stream, the emphasis given the corona emanating from the points as caused by variously positioning the points about the end of the tube, and the strength of the electric field.

The stripes or points deposited with the electrode assembly in Fig. 10 may be localized in themselves to form a pleasing pattern. Advantageously all of surface 30 is covered with adhesive, then spots are first deposited in one color in the manner just described, and then the sheet is moved into another part of the apparatus shown in Fig. 10 where the applied surface is covered with fibers of a different color. Not only can the fibers successively deposited be of different colors, but they can be of different length and/or luster, and by controlling the characteristics of the electric field and the length of treatment the spots or stripes can be made to have a very different appearance from the pile filled in between. The furs of certain animals, the silver fox, for instance, can be imitated by using the method just described.

It has been found desirable in the electrical attachment of fibers to form a pile to have the fibers approach the surface to be piled separately, not in clumps or "tufts" together. Screens may be used to break up grouped fibers as they are floated in air streams into the electric field and a simple manner of using a screen or other foraminous member for this purpose is to have it function as one of the electrodes. Figs. 14 and 15 show an electrode 47 that functions as a complementary electrode to grounded electrode 48. Electrode 47 of conducting material is insulated from ground and positioned about four inches below electrode 48 and is connected by conductor 49 to a source of unidirectional high potential current. It functions also to break up clumps of fibers blown by air jets 50 from supply means 51 that are not completely disintegrated by disintegrating means 52. It has been discovered that a foraminous electrode, positioned and used as is electrode 47 in Fig. 15, can be caused to influence the arrangement of fibers as they are electrically deposited on a surface,—as the surface of sheet 53, for example, as it is held adjacent 48. One way of altering the pile formed of the deposited fibers is to make foraminous electrode 47 with edges 46 projecting through surface 45 which is preferably of screen. The electric field adjacent edges 46 is so concentrated when a high voltage drop is impressed across electrodes 47 and 48 that corona discharges emanate from the edges and the fibers just over the edges deposit in other than even positions as indicated at 54. Improved piling effects are given the pile formed with electrodes 47 and 48. Of course, points or edges arranged in patterns could be substituted for edge members 46 in electrode 47.

Figs. 16, 17 and 18 are plan views of fragments of patterned piles which may be made with the controlling electrodes spaced from the surface being piled. The pattern shown in Fig. 16 is made with an electrode of wire mat of coarse mesh ($\frac{1}{16}$ to $\frac{1}{8}$") located in the position of electrode 47 in Fig. 15. A very strong electric field is used to deposit the fibers, but not strong enough to force the fibers down into the adhesive, such as results from spots desirable across discharges. The pile in Fig. 17 results from the use of an electrode

comprised of parallel wires and that shown in Fig. 18 may be made with a net of rather small mesh used as a controlling electrode and positioned several inches from the adhesive covered surface being piled. The piles shown in Figs. 16, 17 and 18 are characterized by having lines and/or dots standing out prominently as local concentrations of fibers.

Fig. 19 illustrates apparatus in which the field controlling member is supported in front of the surface being piled, but is preferably at the same or nearly the same potential as the electrode just back of the sheet with the surface being piled. Electrode 66 is preferably flat and is at ground potential. Electrode 64 is of reticulated construction or the like and is maintained at high potential. Sheet 61, the under side 62 of which is to be piled, is moved through the electric field between electrodes 66 and 64, preferably just under and touching electrode 66, as shown. A member 63, advantageously formed as a belt with stencil-like perforations such as the diamond design shown in Fig. 20 or the slots shown in Fig. 21, is moved parallel with and at the same speed as sheet 61. It is held a short distance, for example one-fourth inch, in front of adhesive covered surface 62. The fibers to be deposited are brought into the apparatus on a moving porous belt 65. When the fibers are carried by belt 66 over the top of wind box 67, compressed air issuing from nozzles 68 and passing through regulating means 69 blows through the interstices of belt 66 and blows the fibers up through electrode 64 and into the electric field for deposition on surface 62. Very definite patterns are made with the apparatus shown in Fig. 19 and they can be made very colorful if the sheet to be piled is passed through several partially shielded fields, each one depositing fibers of a different color.

Belt 63 can be made of wire or other attenuated members woven into a pattern and it will influence the deposition of the fibers comprising the pile by altering the electric field. The resulting patterns will be much like those shown in Figs. 16 and 17, but in more striking relief. Or belt 63 can be made up as a stencil and cause a pattern to be made by definitely covering portions of surface 62 and permitting flocks to be deposited only behind openings in the stencil. Besides the diamond pattern shown in Fig. 20, decorative designs, such as flowers, and commercial outlines comprising names, can be formed. Such stencil-like members affect the pattern not only mechanically but also affect it by locally altering the characteristics and intensity of the electric field and therefore they may be designated as "field stencils".

Figs. 22 and 23 illustrate apparatus adapted to apply adhesive locally to a surface and then to pile the adhesive covered portions in accordance with the invention. In Fig. 22, adhesive applying roll 71 has cut away portions 72 and raised portions 73. Only the raised portions carry adhesive to the surface to be piled and in the figure a transverse cross-section of a sheet 76 is shown with strips of adhesive 75 applied thereto by raised portions 73. Fig. 23 shows sheet 76 after having been locally coated with adhesive with roll 71 passing through a strong electric field between complementary electrodes 78 and 77. Electrode 77 comprises a conducting plate 79 on the bottom surface of which tubes 76, or other members of small surface area which may be but are not necessarily conducting, are attached. Tubes 76 are spaced to correspond with the spacing of raised portions 73 on applicating roll 71. Sheet 76 is positioned under and adjacent tubes 76 and, for continuous operation, is moved in a direction parallel to the tubes. The pile 80 deposited on adhesive strips 74, by action of the electric field in the manner previously described, is not uniformly erect, but leans outwardly at the edges and projects into unpiled spaces 81. The inclined positions of some of the fibers is due to the directions taken by the lines of force of the electric field approaching the surfaces of tubes 76. The effect of the inclined fibers partially covering spaces 84 is especially striking when the fibers are of one color and sheet 76 is of another color.

Fig. 24 is a diagrammatic view in side elevation of apparatus which may be used to successively applying the several embodiments of the invention which have been described. A sheet 86 of the material to be piled, for example, a light weight, flexible but closely woven textile, is unwound from supply roll 86, passed over an adhesive applying roll 87, over positioning and tensioning rolls 89, 91 and 92, and through means, not shown, for finishing and storing the piled product. Roll 87 is shown with raised portions 88 to apply the adhesive from vessel 89 to the surface of sheet 86 in restricted areas only as in that embodiment of the invention illustrated by Figs. 22 and 23. Where the surface of the sheet is to be completely piled, a smooth roll to spread adhesive over the entire surface of the sheet is used.

As the adhesive coated sheet goes over roll 92, it may be sprayed with fibers from one or more spray electrodes 101 in accordance with the practice described in connection with Figs. 10, 11, 12 and 13. If the spray electrodes 101 are operated continuously, lines of fibers are deposited upon sheet 86 as shown in Fig. 12, but if the spraying is done at intervals only, spaced patches such as the spots shown in Fig. 13 will be deposited. The fibers for sprays 101 are supplied through conduit 102 and this can be made to move away from the entrance of sprays 101 by reciprocating means, for instance, crank 107 acting, preferably with a quick return movement, through connecting rod 108 will make conduit 102 articulate at joint 109 at the chosen intervals when deposition of particles is to be interrupted. During the period of interruption the fibers blow out the end of conduit 102 and fall to the bottom of casing 103 to be lifted again by blower 101. If electrode 104 is maintained at high potential connecting tube 102 is made of insulating material.

Sheet 86 next passes through an electric field established between spray electrode 110 and control electrode 111 by means of a high voltage source not shown. The latter electrode can be in the form of any of the control electrodes shown in Figs. 1 to 9, inclusive, but is made tube or is attached to an endless band. If electrode 111 is to cause the fibers to deposit in a chosen pattern or one that intermittently varies, it must move at the same speed and in the same direction as sheet 86 while sheet 86 is moving through the electric field above electrode 110. This is accomplished by having pulley 112, over which electrode 111 passes, by a positive drive 113 such as a chain from a source of power 114 which also turns pulley 86 over which sheet 86 passes, in positive manner. Positive synchronous movement of belt and electrode can also be obtained by having spurs project from the edge of electrode 111 and engage perforations along the edges of sheet 86 in the manner known to the moving picture art.

[fol. 674]

A grounded shoe 118 contacts electrode 111 and maintains it at ground potential.

Underneath sheet 86 a belt 116 may be positioned by utilizing supporting pulley 117 and supporting and propelling pulley 118. Belt 116 may be perforated as a stencil and function as a field stencil in the manner of member 66 in Fig. 10. The stencilling belt might move at the same speed as sheet 86 and such movement is obtained through drive 119. Other field altering means, such as screens, can be used in place of stencilling means 116, and such means travelling at the speed of sheet 86 will give the pile on sheet 86 a woven appearance as indicated in Figs. 16 and 18. Although pattern control electrode 111 and stencilling or other field altering means 116 can be used at the same time, ordinarily this is not done. A flat stationary electrode may be used in place of special electrode 111 when a field stencil is being used in front of sheet 86. Fibers are supplied to the field between electrodes 110 and 111 by supply means 120 in which air jets are utilized to project the fibers up through electrode 110.

Electrodes 124 and 125 in Fig. 24 are energized and used to deposit fibers if portions of the surface of sheet 86 remain unpiled after the sheet passes through the processing steps described in the above. No special effort is sought in this last step. Both electrodes have, in general, flat surfaces and the uniform field that results from impressing a high voltage across electrodes 124 and 125 tends to deposit an erect uniform pile. The deposition of fibers in this step is usually for the purpose of completing the pile started with spray electrodes 101 and/or the pile deposited through field stencil 116 and this filling in often made with fibers of a different color from that used in the preceding steps.

Apparatus for satisfactorily supplying fibers to the field between electrodes 124 and 125 is shown diagrammatically under electrode 124. It comprises an endless foraminous conveying belt 126 upon which fibers are spread by a distributor 130, preferably agitated, and a blowing means 127 that distributes air under pressure under belt 126 and causes it to pass up through the belt and raise the fibers therefrom and blow them through screen electrode 124. Undeposited fibers are collected in hopper 128 and conveyed by an air stream set in motion by fan 129 to filter bag collector 131 and thence to distributor 130.

Fig. 24 illustrates apparatus with a wide range of usefulness in the forming of simulated piles on adhesive covered surfaces. It is illustrative of the wide variation in methods and means for obtaining useful patterns in the electrical deposition of pile forming materials by the local alteration of the characteristics of the electrical field effecting the deposition, so as to produce a definite typical non-uniformity therein. It is obviously subject to a very large degree of variation and may be provided with electrode rapping or agitating means and other devices and modifications.

We claim:

1. Apparatus for electrically depositing attenuated fibers upon an adhesive coated surface to form a pile thereon in pattern form, comprising complementary electrodes, means for maintaining a high potential difference between said electrodes to establish an electric field therebetween, one of said electrodes being formed to cause local variations in the concentration of the electric field between said electrodes, means for passing an adhesive-surfaced base material through the non-uniform portion of said field, means for moving said named electrode substantially synchronously with said base material, and means for supplying attenuated fibers to said field.

2. Apparatus for electrically depositing attenuated fibers upon an adhesive coated surface to form a pile thereon in pattern form comprising complementary electrodes, means for maintaining a high potential difference between said electrodes to establish an electric field therebetween, at least one of said electrodes comprising a plurality of elements of different electrical characteristics providing, when viewed from the complementary electrode, a surface locally varied to produce in the electric field between said electrodes local concentrations, means for positioning an adhesive-surfaced base material in the non-uniform portion of said field, and means for supplying attenuated fibers to said field.

3. Apparatus for electrically depositing attenuated fibers upon an adhesive coated surface to form a pile thereon in pattern form comprising complementary electrodes, means for maintaining a high potential difference between said electrodes to establish an electric field therebetween, at least one of said electrodes comprising a plurality of elements varying in radius of curvature to produce in the electric field between said electrodes local concentrations, means for positioning an adhesive-surfaced base material in the non-uniform portion of said field, and means for supplying attenuated fibers to said field.

4. Apparatus for electrically depositing attenuated fibers upon an adhesive coated surface to form a pile thereon in pattern form comprising complementary electrodes, means for maintaining a high potential difference between said electrodes to establish an electric field therebetween, at least one of said electrodes comprising a plurality of members of different specific inductive capacity producing in the electric field between said electrodes local concentrations, means for positioning an adhesive-surfaced base material in the non-uniform portion of said field, and means for supplying attenuated fibers to said field.

5. Apparatus for electrically depositing attenuated fibers upon an adhesive coated surface to form a pile thereon in pattern form comprising complementary electrodes, means for maintaining a high potential difference between said electrodes to establish an electric field therebetween, at least one of said electrodes comprising a plurality of members of small radius of curvature spaced from the complementary electrode and producing in the electric field between said electrodes local concentrations, means for positioning an adhesive-surfaced base material in the non-uniform portion of said field, and means for supplying attenuated fibers to said field.

6. Apparatus for electrically depositing attenuated fibers upon an adhesive coated surface to form a pile thereon in pattern form comprising complementary electrodes, means for maintaining a high potential difference between said electrodes to establish an electric field therebetween, at least one of said electrodes comprising a plurality of members of small radius of curvature spaced from the complementary electrode and producing in the electric field between said electrodes local concentrations, means for positioning an adhesive-surfaced base material in the non-uniform portion of said field, and at least

one of said electrodes comprising a conduit for supplying attenuated fibers to said field.

7. Apparatus for electrically depositing attenuated fibers upon an adhesive coated surface to form a pile thereon in pattern form comprising complementary electrodes, means for maintaining a high potential difference between said electrodes to establish an electric field therebetween, at least one of said electrodes comprising a plurality of members of small radius of curvature spaced from the complementary electrode and producing in the electric field between said electrodes local concentrations, means for positioning an adhesive-surfaced base material in the non-uniform portion of said field, and said electrode having members of small radius of curvature comprising a conduit for supplying attenuated fibers to said field.

8. Apparatus for electrically depositing attenuated fibers upon an adhesive coated surface to form a pile thereon in pattern form comprising complementary electrodes, means for maintaining a high potential difference between said electrodes to establish an electric field therebetween, at least one of said electrodes comprising a plurality of members of small radius of curvature spaced from the complementary electrode and producing in the electric field between said electrodes ionic streams, means for positioning an adhesive-surfaced base material in the portion of the field comprising said ionic streams, and means for supplying attenuated fibers to said field.

9. Apparatus for electrically depositing attenuated fibers upon an adhesive coated surface to form a pile thereon in pattern form comprising complementary electrodes, means for maintaining a high potential difference between said electrodes to establish an electric field therebetween, at least one of said electrodes comprising a plurality of members of small radius of curvature spaced from the complementary electrode and producing in the electric field between said electrodes localized ionic streams, means for positioning an adhesive-surfaced base material in the portion of the field comprising said ionic streams, and means for supplying attenuated fibers to said field.

10. Apparatus for electrically depositing attenuated fibers upon an adhesive coated surface to form a pile thereon in pattern form, comprising complementary electrodes, means for maintaining a high potential difference between said electrodes to establish an electric field therebetween, at least one of said electrodes having local variations in electrical characteristics of the material forming said electrode whereby the electric field between said electrodes is caused to comprise locally concentrated portions, means for positioning an adhesive-surfaced base material in the non-uniform portion of the field, and means for supplying attenuated fibers to said field.

11. Apparatus for electrically depositing attenuated fibers upon an adhesive coated surface to form a pile thereon in pattern form, comprising complementary electrodes, means for maintaining a high potential difference between said electrodes to establish an electric field therebetween, at least one of said electrodes having local variations in specific inductive capacity of the material forming said electrode whereby the electric field between said electrodes is caused to comprise locally concentrated portions, means for positioning an adhesive-surfaced base material in the non-uniform portion of the field, and means for supplying attenuated fibers to said field.

12. A method for electrically depositing attenuated fibers upon an adhesive coated surface to form a pile thereon in pattern form which comprises establishing an electric field having locally concentrated portions, positioning an adhesive-surfaced base material in the non-uniform portion of said field, and supplying attenuated fibers to said field thereby depositing the fibers on said base material in pattern form.

13. A method for electrically depositing attenuated fibers upon an adhesive coated surface to form a pile thereon in pattern form which comprises establishing an electric field having locally concentrated portions, positioning an adhesive-surfaced base material in the non-uniform portion of said field, supplying attenuated fibers to said field thereby depositing the fibers on said base material in pattern form, thereafter positioning said base material in a substantially uniform electric field, and supplying fibers of different appearance from said first deposited fibers to said field.

14. A method for electrically depositing attenuated fibers upon an adhesive coated surface to form a pile thereon in pattern form which comprises establishing an electric field having locally concentrated portions, passing an adhesive-surfaced base material through the non-uniform portion of said field, supplying attenuated fibers to said field thereby depositing the fibers on said base material in pattern form, thereafter passing said base material through a substantially uniform electric field, and supplying fibers of different appearance from said first deposited fibers to said field.

15. A method for electrically depositing attenuated fibers upon an adhesive coated surface to form a pile thereon in pattern form which comprises establishing an electric field having locally concentrated portions, passing an adhesive-surfaced base material through the non-uniform portion of said field, supplying attenuated fibers to said field thereby depositing the fibers of said base material in pattern form, thereafter passing said base material through a second field constituted differently from said first field, and supplying fibers of different appearance from said first deposited fibers to said field.

ARCHIBALD F. MENTON.
HARRY A. WINTERSMITH.

[fol. 676]

July 18, 1939. H. A. WINTERMUTE 2,166,385

DETERMINING ELECTRICAL CHARACTERISTICS

Filed April 10, 1937

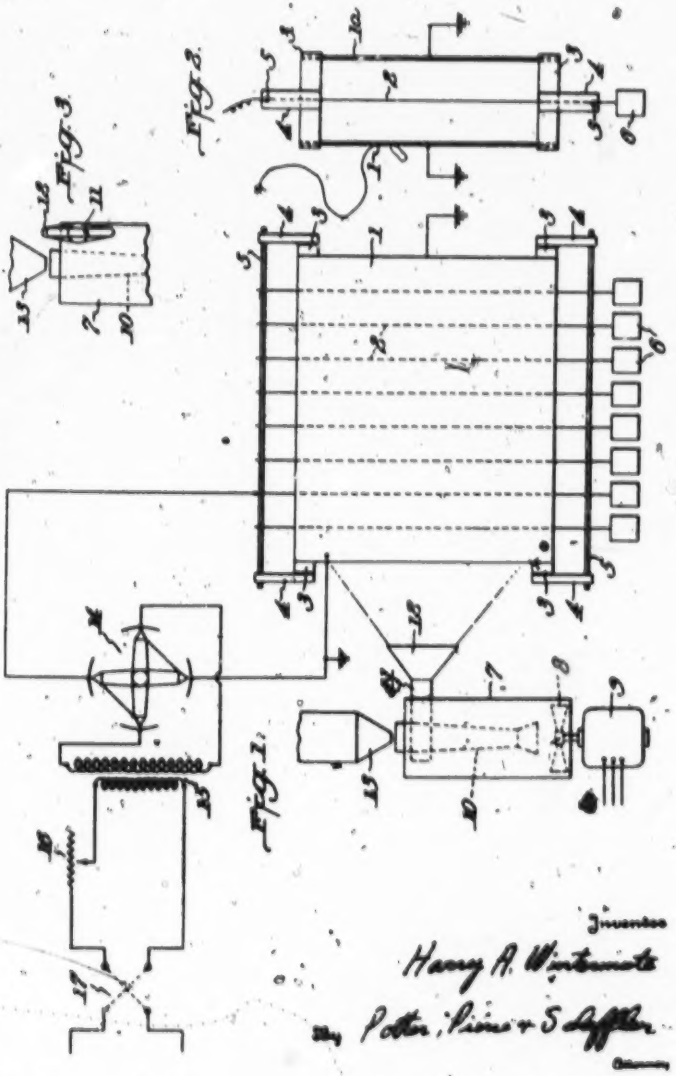

Fig. 2.

Fig. 3.

Fig. 1.

Inventor

Harry A. Wintermute

By Potter, Kline & Schaffer

Attorneys

Patented July 18, 1939

2,166,385

UNITED STATES PATENT OFFICE

2,166,385

DETERMINING ELECTRICAL CHARACTERISTICS

Harry A. Wintermute, Plainfield, N. J., assignor, by mesne assignments, to Bohr-Manning Corporation, a corporation of Massachusetts

Application April 10, 1937, Serial No. 136,232

9 Claims. (Cl. 175—183)

This invention relates to a method of determining the electrical characteristics of finely divided materials, particularly fibrous materials of relatively high electrical resistance, for example, rayon flock, cotton fibers and the like.

It is particularly desirable in the utilization of finely divided fibrous materials to form piled surfaces by electrical deposition of the fibrous materials on a surface, to be able to determine in advance the electrical characteristics of the materials to be deposited, or to be able to determine the conditions, for example of temperature and relative humidity at which a material exhibits the most favorable electrical characteristics for the purpose in hand.

A principal object of the invention is to provide a method for testing the electrical characteristics of finely divided materials.

A further object is to provide a method for the determination of the conditions under which the electrical characteristics of a material are at an optimum or have a predetermined value or are substantially equivalent to the electrical characteristics of a preselected standard material.

It has been found that these and other objects of the invention may be attained by causing a portion of the material to be tested to adhere to a surface under the influence of an electric charge imparted to the material and determining the rate at which the material loses the imparted charge.

An advantageous method of imparting a charge to the material comprises dispersing the material in air or other medium, and passing the dispersed material into an electrical field between a discharge member and a relatively extended surface whereby the material is deposited on the extended surface and a charge is imparted to the material.

The rate at which the imparted charge is lost may be determined by means of an electroscope or by determining the time required for the charge to fall to such a value that the deposited material will fall under the influence of gravity when the collecting surface is placed, for example, in a vertical position.

In the production of pile-surfaced materials by the deposition of finely divided fibrous materials, such as rayon flock, it has been found that in general the materials which exhibit a relatively high rate of leakage of the imparted charge are of particular value in the production of pile fabrics. It has also been found that materials showing similar rates of leakage are, in general, similar in their action in the production of piled surfaces. It has further been found that the rate of leakage and, correlative therewith, the satisfactoriness of deposition in the pile-forming process, may be varied by varying the condition of the material. The temperature and the relative humidity have been found to be of particular effect upon the rate of leakage of an imparted charge from finely divided material and the method of the invention provides an advantageous means for determining the optimum conditions, for example, of temperature and relative humidity under which the electrical deposition process may be carried out.

The invention will be more particularly described with reference to the accompanying drawing of an illustrative form of apparatus for use in practicing the invention.

In the drawing:

Fig. 1 is a partly diagrammatic elevation of apparatus suitable for practicing the invention;

Fig. 2 is an end elevation of the charging device of the apparatus of Fig. 1; and

Fig. 3 is a fragmentary end elevation of the dispersing device of the apparatus of Fig. 1.

In the figures, 1 and 1a are vertical plate electrodes of conducting or semi-conducting material supported by members 3, and 2 are attenuated discharge electrodes carried by supporting members 5 mounted on insulators 4. The discharge electrodes are steadied by weights 6. The electrodes are energized by high voltage unidirectional current from mechanical rectifier 14 connected with the secondary of transformer 15. 16 is a resistance for voltage control and for ballasting the circuit and 17 is a reversing switch for controlling polarity of the charge.

The material to be tested is dispersed in a disperser 7, having a fan 8, driven by motor 9, for forming a current of air or other gas. The material is supplied from hopper 13 into tube 10 which carries the material to the bottom of the dispersing chamber and also forms an inlet for the current of air. The air current carrying the dispersed material passes out of tangential outlet 11, through the fan shaped nozzle 12 into the space between plates 1 and 1a.

In operation, the finely divided materials to be tested are broken up into individual particles and dispersed in the gas stream by means of the disperser 7. The gas stream leaves the disperser via the tangential outlet 11, entering the fan shaped nozzle 12. The gas carrying the finely dispersed particles leaves the nozzle 12 in a relatively narrow stream and enters the space be-

[fol. 678]

tween the two plates 1 and 1a. Here the particles are subjected to the influence of the electric fields between the discharge electrodes 2 and the conducting plate members 1 and 1a.

As the particles travel through the space between plates 1 and 1a the particles are charged by the electric field in which they find themselves principally by the corona discharge emanating from the discharge electrodes. The particles as they are charged move to the plates to which they cling as long as the plates and wires are energized. Operation is continued until a mat of fibers has been deposited on each plate varying from a few mils up to a depth of an inch or more.

As long as the apparatus is energized, additional electric charge is supplied to the mat of fibers as fast as the charge on the fibers leaks off. However, as soon as the source of energy is disconnected the fibers begin to lose their charge by flow of current through the mat. The time required for the charge to leak off sufficiently for the mat to fall varies with the conductivity of the fibers. For high conductivity they may cling only a fraction of a second after the energy source is disconnected or for very low conductivity they may cling for several hours.

The charged particles attracted to the plate electrode are not repelled upon approaching the plate because the discharge from the discharge electrode furnishes additional charges of constant polarity to the particles as fast as the charges on the particles leak off to the plate. When the discharge electrode is disconnected from the source of energy, the particles will cling to the plate electrode for a long time if the paths over or through the particles and across their loose and limited contact with the surface of the plate are not sufficiently conducting to permit the charges on the particles to flow readily to the surface of the plate and be neutralized by the charges of opposite polarity thereon, and the rate at which a charge from the plate will flow out over the surfaces of the particles, bringing about a repelling action, will be very low when poorly conducting paths only are provided.

The opposing electrodes can be energized in numerous ways. However, for most cases satisfactory energization can be secured by means of a high voltage transformer and a synchronous mechanical rectifier connected between the transformer and the opposing electrodes.

Particles not charged are carried on through the dust and are not deposited on the plates. For best results, the gas carrying the finely divided material is fed into the space between the opposing electrodes in a stream relatively narrow with respect to the dust so that there will be no influence of the gas stream on the precipitated mat of fibers.

An illustrative example of a method of testing embodying the principles of the invention is as follows:

Forty grams of white cotanose rayon flock were dispersed in air at a dry bulb temperature of 100° F. and a relative humidity of 30%. The dispersion was passed between two flat vertical plates about 45 inches long and 30 inches high spaced 7¼ inches apart, having a plurality of wire discharge electrodes positioned midway between them. An electrical field was maintained by means of a unilateral potential of 30,000 volts impressed between the discharge electrodes and the plates. The voltage was maintained for several minutes after the material had deposited on the plates to insure uniformity of charging.

The time required for the deposited material to fall from the collecting plates was 72,840 seconds. When a further sample was deposited at the same temperature and at a relative humidity of 67%, the deposited material fell from the collecting plates in 420 seconds.

A sample of white viscose rayon tested at a dry bulb temperature of 86° F. and a relative humidity of 65% fell from the collecting plates in 1 second.

While the invention has been more particularly described for the purpose of illustration, with reference to the testing of fibrous materials for use in the production of pile-surfaced materials, it is not limited thereto but may, in general, be advantageously applied when it is desired to determine the electrical characteristics of other finely divided materials of relatively low conductivity.

This application is a continuation-in-part of my application Serial No. 51,719, filed November 26, 1935.

I claim:

1. Method of testing finely divided fibrous materials which comprises causing a sample of the material to adhere to a surface by means of an electrical charge impressed thereon and determining the time required for the material to fall from the surface under the influence of gravity.

2. Method of testing finely divided fibrous material which comprises electrically depositing a sample of the material on a surface and determining the time required for the material to fall from the surface under the action of gravity.

3. Method of testing finely divided fibrous material which comprises electrically depositing a sample of the material on a surface and determining the conditions under which the material will fall from the surface under the action of gravity in a predetermined length of time.

4. Method of testing the electrical conductivity of finely divided materials of relatively low conductivity which comprises dispersing a sample of the material in a gaseous medium, impressing an electrical charge on the dispersed material, and determining the rate at which the dispersed charge is lost.

5. Method of measuring the effect upon finely divided materials of humidity and temperature conditions which comprises subjecting a sample of the material to predetermined conditions of humidity and temperature, causing the sample to adhere to a surface by means of an electrical charge impressed upon the sample and determining the rate at which the charge is transferred from the sample to the surface.

6. Method of testing the electrical characteristics of finely divided material of relatively low conductivity which comprises dispersing the material in a gaseous medium, electrically depositing the material on a surface by the action of an electric field, discontinuing the electric field, and determining the time required for the material to fall from the surface under the action of gravity.

7. Method of testing the electrical characteristics of finely divided materials of low conductivity which comprises subjecting the materials to a corona discharge to impress an electrical charge thereon and determining the rate at which the impressed charge is lost.

8. Method of testing the electrical characteristics of finely divided materials of low conductivity which comprises subjecting the materials

to a corona discharge to impress an electrical charge thereon and determining the conditions of the atmosphere in contact therewith under which the impressed charge is lost at a predetermined rate.

9. Method of testing the electrical characteristics of finely divided materials of low conductivity which comprises subjecting said materials to a corona discharge in an electric field to cause the material to adhere to a surface, and determining the time required for adhesion of the material to the surface to be lost after discontinuance of the electric field.

HARRY A. WINTERMUTE.

[fol. 680]

Sept. 12, 1939. H. A. WINTERMUTE 2,173,032

PRODUCTION OF FILE SURFACED MATERIALS

Filed Nov. 23, 1933 3 Sheets-Sheet 1

Fig. 1.

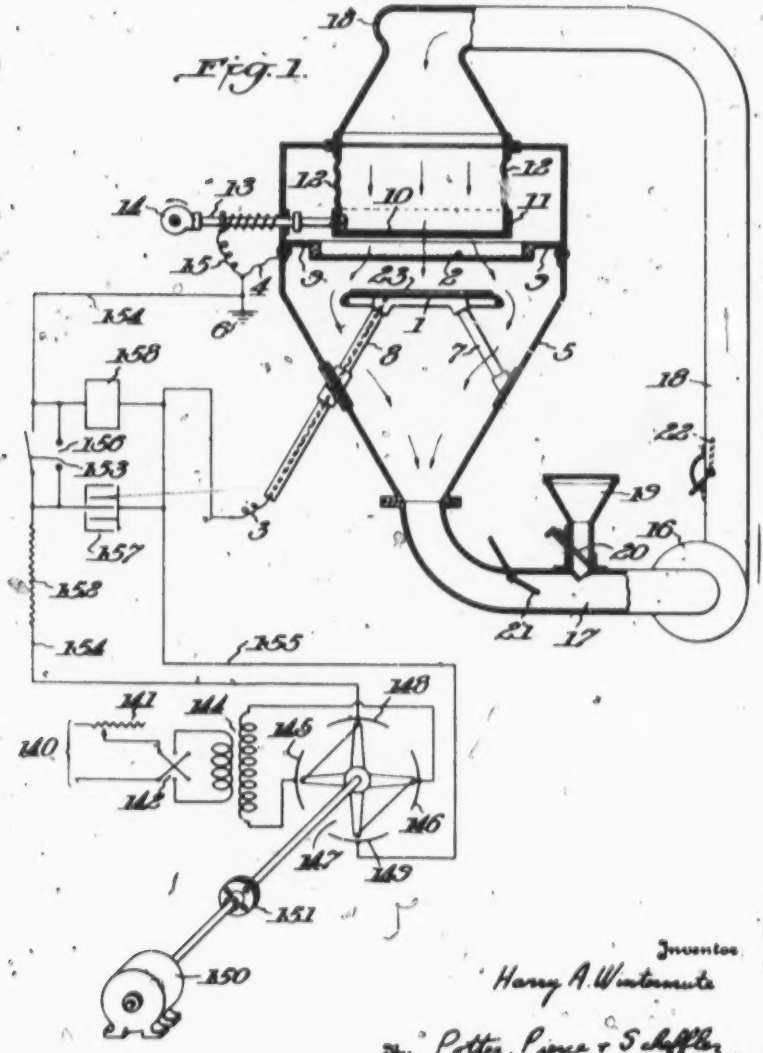

Inventor
Harry A. Wintermute
By Potter, Prince & Schaffer
Attorneys

[fol. 681]

Sept. 12, 1939. H. A. WINTERMUTE 2,173,032

PRODUCTION OF PILE SURFACED MATERIALS

Filed Nov. 23, 1933 3 Sheets-Sheet 2

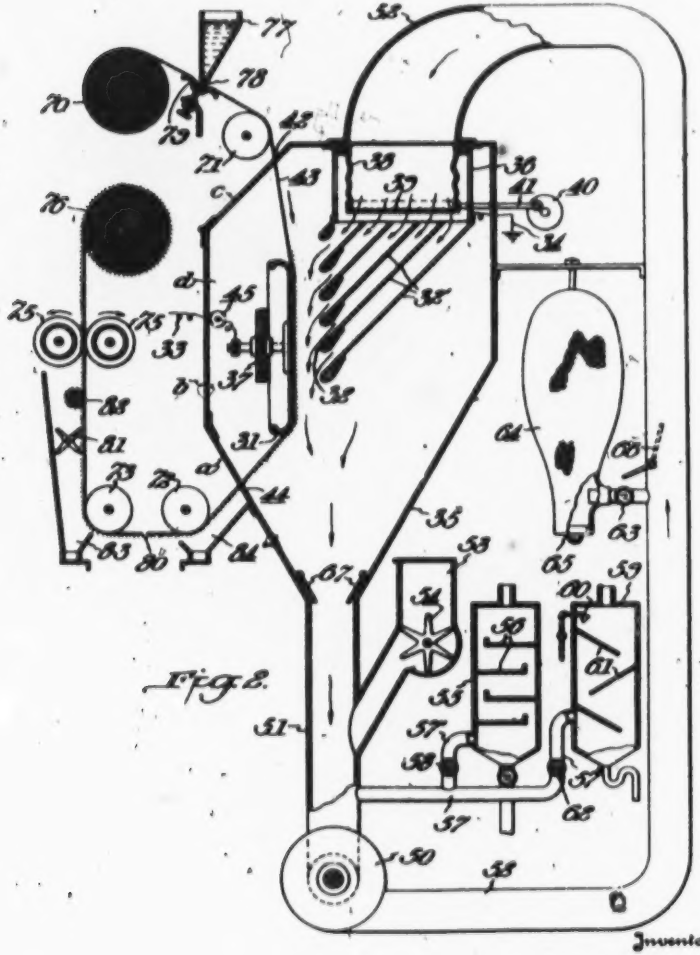

Fig. 2.

Inventor:
Harry A. Wintermute
By Potter, Pierce & Schaffer
Attorneys

[fol. 682]

Sept. 12, 1939. H. A. WINTERMUTE 2,173,032

PRODUCTION OF FILE SURFACED MATERIALS

Filed Nov. 23, 1933 3 Sheets-Sheet 3

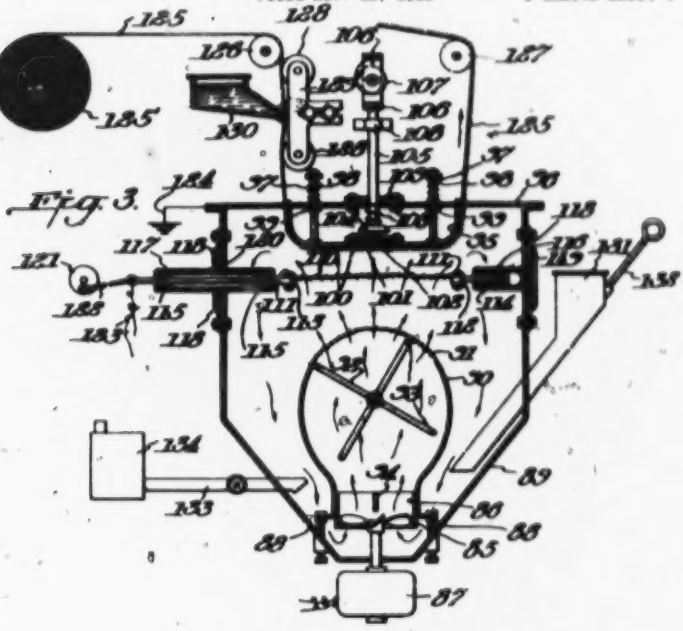

Fig. 3.

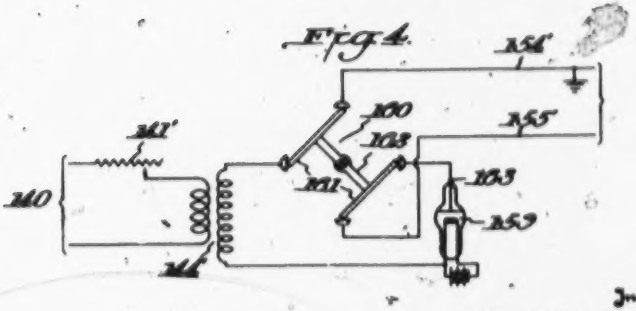

Fig. 4.

Inventor:
Harry A. Wintermute
By Potter, Paine & Schaffer
Attorneys

[fol. 683]

Patented Sept. 12, 1939 2,173,032

UNITED STATES PATENT OFFICE

2,173,032

PRODUCTION OF PILE-SURFACED MATERIALS

Harry A. Winkenwerder, Plainfield, N. J., assignor, by mesne assignments, to Behr-Manning Corporation, a corporation of Massachusetts

Application November 22, 1933, Serial No. 699,456

21 Claims. (Cl. 91—8)

This invention relates to the production of piled surfaces and pile surfaced materials and is particularly directed to apparatus and methods of operation adapted for the efficient production of such surfaces and surfaced materials by a process which involves positioning an adhesive-coated foundation material in an electric field and supplying pile-forming fibers thereto while in said field.

It has been found that the production of piled surfaces by electrically depositing fibers and the like by said process can be advantageously carried out by means of the apparatus and methods of operating which are to be described hereinafter.

Among the novel features and objects of the present invention are included the use of a stream of air or other gas to disentangle the pile forming fibers and to carry them as individual suspended particles into the electric field for deposition on the surface to be piled. Further objects of the invention are to use said stream of gas to prevent or break up the "treeing" of the fibers as they approach the surface to be piled, to return for representation fibers that are not attached when first presented for deposition, to supplement the force of gravity and the electrical forces available in moving the fibers towards the surface to be piled and to provide methods of controlling the relative humidity and other gas conditions within the apparatus in which the pile forming operations are carried on.

Other objects comprise the use of auxiliary electrodes to provide efficient, safe, and convenient control of the electrical forces and the use of special electrical circuits to prevent undesirable treeing and massing of the fibers and to provide advantageous conditions as will be hereinafter described.

The method of pile construction to which the present invention applies comprises, broadly, establishing an electric field of appreciable strength, for example, having a voltage drop of 45,000 volts between two relatively flat, parallel, electrodes three inches apart; placing a base material, e. g. cloth or paper, coated with an adhesive, within the electric field (preferably parallel and adjacent to one boundary of said field); and supplying pile-forming fibers to the region of the electric field. The fibers, initially carrying electric charges or becoming electrically charged by induction, move under the influence of the electric field and contact with the adhesive in oriented position, i. e. perpendicular to the base, whereby only one end of each fiber is attached to the base.

The manner in which these and other objects of the invention are realized will be described in what follows, reference being had for the purpose of illustration to the accompanying drawings, in which:

Fig. 1 is a diagrammatic view of a system comprising apparatus shown in sectional elevation and an electric circuit, which embodies certain principles of the invention;

Fig. 2 illustrates a system, shown more or less diagrammatically, but for the most part in sectional elevation, for practicing one embodiment of the invention;

Fig. 3 shows apparatus, in sectional elevation, for practicing the principles of the invention in somewhat different manner; and

Fig. 4 is a diagrammatical representation of a circuit which may be substituted in some cases for the circuit shown in Fig. 1.

Referring to Fig. 1, numeral 5 designates a more or less air tight casing in which are supported two electrodes, 1 and 2, respectively, between which may be set up a strong electric field. A source of energy, to be described later, is connected to electrode 1 by electrical conductor 3 and to electrode 2 by conductor 4, the latter electrode, and casing 5 also, being preferably connected to ground as shown at 6. Electrode 1 is insulated from casing 5 by insulating support 7 and tube 8. Tube 8 functions both as an insulating support and as an inlet bushing for conductor 3. Electrode 2, which is shown as a screen, is supported from the sides of casing 5 by imperforate plate-like members 9, 9. These are free from points or projecting edges, it being desirable that no corona discharge emanate from the apparatus while it is energized.

Above electrode 2 is a basket for sifting the fibers to be used in making piled surfaces. It comprises a screen 10, preferably of closer mesh than that of electrode 2, a reinforcing band 11, and a supporting sleeve 12 of flexible material, i. e. canvas, from which screen 10 depends. Shaking of screen 10 is accomplished by the reciprocal movement of rod 13 brought about in turn by the turning of cam 14 by means not shown. In this embodiment of the invention, screen 10 and connected parts are connected to ground by conductor 15.

The fibers are carried into the region of the electric field, that is, betwe electrodes 1 and 2, by air flotation; fan 16, conn ted to the bottom and top of casing 5 by flues and 18, respec-

[fol. 684]

tively, being used to move the air through the apparatus. The fibers, which may be flocks cut from rayon or other fibrous material, are fed into the apparatus from hopper 19 in amounts regulatable by damper 20. As the fiber inlet is on the inlet side of fan 16 the pressures within the system may be readily regulated by means of dampers 21 and 22 so that the pressure within hopper 19 is slightly below atmospheric thus facilitating the movement of the fibers from the hopper into the air stream passing in flue 17.

The manner in which the apparatus is operated in constructing piled surfaces is set forth in the following description. The material to be piled, say a sheet of paper, is coated with adhesive and placed upon electrode 1 with the adhesive facing upwards, as shown at 23. The electrodes are now energized, the circuit indicated, to be later described, being used for that purpose. Fan 16 is started and fibers are added from the hopper 19 to the air passing in flue 17. Many fibers come from storage rather densely packed together and disintegration is necessary before they can be introduced into the electric field for deposition on material 23. The agitation provided by the fan and by passage through the flues is sometimes sufficient to break up the masses of tangled fibers, but it has been found advantageous to supplement this action by further agitation on screen 18. Some of the fibers brought to screen 18 by the air stream passing in flue 18 immediately pass through screen 18 and electrode 2 and are deposited by action of the electric field existing between electrodes 1 and 2 upon the adhesive covered material 23. Some of the fibers reach screen 18 in clumps, however, and pass through only after they have been agitated upon the surface of the screen and blown with the passing air current.

In this particular embodiment of the invention the force of gravity and the kinetic energy furnished by the air stream both augment the electric forces in pushing or pulling the fibers down upon the surface of sheet 23. The air stream must turn at 90 degrees, however, as it approaches the surface of sheet 23 in order to pass around electrode 1, as indicated by the arrows, and enter flue 17 beneath it; but this seems to be more beneficial than otherwise. The fibers that have been properly separated, charged and oriented are pulled down, definitely, to the surface and adhere to it because of the predominance of the electric forces over any sidewise pull set up by the air stream. The fibers which tree or settle in knob masses over the surface of the pile are blown away by the air and carried into flue 17 to be again introduced, after further disintegration, for deposition. As pointed out above, the screen comprising electrode 2 is of coarser mesh than screen 18; for example, the former may have 4 openings to the linear inch while the latter may have 8 or more. This is to assure the ready passage of fibers through electrode 2. But sometimes long and rough fibers will build up on screen 2, necessitating the shaking or brushing of this electrode. It is to advantage to keep electrode 2 free from complications and auxiliary members and in careful alignment, parallel to electrode 1. This is best accomplished by supporting it as shown, but where shaking and the like must be resorted to, electrode 2 may be eliminated and the bottom surface of screen 18 can be made to function as the top boundary of the electric field.

Fig. 3 illustrates apparatus in which the surface to be piled is held in vertical position. This construction has been found to have advantages when the fibers tend to tree between the electrodes and/or become grouped in unattached masses over the uncompleted pile. Unattached fibers can be more positively blown from a vertical surface than from horizontal surfaces such as that shown in Fig. 1. The construction illustrated in Fig. 2 also makes possible the piling of surfaces while they are moving and permits of humidity control within the apparatus.

In Fig. 2, numeral 31 designates the electrode over which material 42, which may be a flexible sheet of fabric, is caused to pass while a pile is built upon the surface thereof. Electrode 31 is maintained, preferably, at high potential and is supported by insulating means as indicated by member 37. Electrode 31 is opposed by electrode 32, made up of members 32' extending transversely and, in general, parallel to the surface of electrode 31. Members 32' are positioned from one-half to one and one-half inches apart, depending upon electrical conditions, the velocity of the air passing, and other conditions. The lower edges of members 32', the edges nearest to electrode 31, are bent back or otherwise rounded to prevent corona discharge therefrom. With the edges thus rounded and spaced and carefully aligned so as to be at an equal distance from the surface of electrode 31, members 32' comprise a boundary for any electric field established between electrodes 31 and 32 that is not essentially different in its characteristics from that to be had with a flat plate. Electrode members 32' are supported, by means not shown, so their upper edges are in alignment with the bottom, and open end, of wind box 36; and air leaving the wind box is directed, in an oblique direction, by members 32' towards the surface of electrode 31. Within wind box 36 is a fiber sifting device made up of flexible sleeve 38, screen 39 dependent therefrom, and an agitating device indicated by crank 40 and connecting rod 41.

The electrodes and supports just described are enclosed in a chamber or casing 35. Casing 35 is preferably substantially air tight, but as it is difficult, although not impossible, to handle material 42 within the casing, slots are made at 42 and 44 for the entrance and exit of the material. Casing 35 is ordinarily made of electric conducting material, grounded by conductor 34, but it is advisable in some cases to make it of non-conducting material, especially that part enclosing high potential electrode 31 as indicated at a, b, c and d. Side b can be built as a door through which electrode 31 can be inspected and positioned and the insulation thereabouts can be cleaned. Electric conductor 33 connects electrode 31 to energizing means outside the casing, such as that indicated in Figs. 1 and 4. It is held in insulated relationship with wall d of casing 35 by bushing 43.

Air, or any suitable gas, is circulated through casing 35 by fan 50, connections to the fan being made by flues 51 and 52. Fibers are added to the air stream through hopper 53, the amounts added being controlled by measuring wheel 54. The characteristics of the circulating air, especially as regards humidity conditions, are controlled by adding conditioned air and releasing surplus air. Air drier than that of the atmosphere can be obtained by drawing air through drying chamber 55 which is connected to flue 51 by flues 57 and 57', control being secured by valve 58. Dehydration of the air is brought about by spreading cal-

cium chloride over trays 58 and causing the air to pass over the chloride. The air in the system may be too dry in cold weather. Humidification can be secured by drawing air into the system through spray chamber 59, water provided by spray 60 being evaporated as the air passes over baffles 61. Valve 62 permits close regulation of the humidified air admitted. Conditioned air admitted for humidity correction replaces air already in the system and this is released through valve 63. The released air carries fibers in common with the other air in circulation and these are collected in bag filter 64, removed through closure 65, and returned to hopper 56. It has been found advantageous to so regulate valves 53 and 58 (or 62) and dampers 66 and 67 that the pressure in casing 35 is held at or very slightly above atmospheric pressure. If the pressure is slightly above that of the atmosphere, air passes out slots 42 and 44, whereas at lower pressures it would enter through them. Of course, by suitable control means, gases for special purposes can be introduced into the system. If the adhesive on material 43 is accompanied by solvents having vapors which may form explosive mixtures with air, such mixtures can be avoided by adding carbon dioxide or other non-supporter of combustion in appreciable quantity. While ordinarily sparks are not present in the apparatus, improper control may cause the inadvertent presence of sparks and explosive mixtures of air and vapors are to be avoided.

The material upon the surface of which a pile is to be constructed may be a fabric ordinarily supplied in roll form as indicated by roll 70. It is stretched over guide rolls 71, 72 and 73 and over electrode 31 and slowly moved by suitable means such as rolls 75, 76 which have raised and corrugated bands at the ends thereof to grasp the sheet 43 at the edges and draw it over the other rolls and permit it to be re-rolled as indicated at roll 76. The adhesive may be put on by various methods. The method illustrated consists of the use of trough 77 with spreading edge 78 which presses upon or projects towards the fabric as it is stretched over adjustable member 79. The fibers are attached, in positions perpendicular to the surface of the fabric, for the most part, as the fabric moves over electrode 31. The piled material is then finished as may be necessary or desired. Driers and/or vulcanizers, not shown, may be provided at location 80. A beater 81 and brush 82 remove non-attached or poorly attached fibers after the adhesive has become dry. Hoppers 83 and 84 collect loose fibers that may otherwise become scattered about the operating room.

In operating the apparatus shown in Fig. 2 it is important that the fibers be separately floated in the air stream and be conducted into the electric field in this condition for deposition on the surface to be piled. The aggregates of fibers introduced through hopper 56 are broken up to a considerable extent by fan 58 which includes a wheel with paddles of simple type that is made to revolve at relatively high speed. Further disintegration is obtained with sifting screen 30 operating in the passing air stream. The air stream and burden of suspended fibers, after passing through screen 30, is divided and deflected by members 32' and is made to enter the electric field between electrodes 31 and 32 at an acute angle with the surface of material 43. The individual fibers move across the electric field too rapidly to be followed with the eye, but the result is easily ascertained. Many of the fibers reach the adhesive covered surface in oriented position; that is, perpendicular to the surface, and become fastened at one end to that surface. Some of the fibers approach the surface sidewise for lack of sufficient electric charge or some other reason, or become attracted to other fibers and tend to "tree" between the electrodes. If these unattached fibers remain over the uncompleted pile, further deposition of oriented fibers ceases; but by controlling the velocity of the air stream, a removal of such fibers is realized and deposition of fibers continues until they are so thickly packed upon the surface of the material that the material is completely hidden and a pile of appreciable mechanical stiffness results. The air velocity required to blow off unattached fibers need not be high. If blower 58 provides pressures of from one to four inches of water it is satisfactory. Too high a velocity of air in the electric field will move the charged fibers in a different direction from the direction the electric field tends to move them. But it can be readily appreciated that a stream of air moving at a properly chosen velocity and preferably at an angle which causes the air stream to augment the force of gravity will keep the region of the electric field free of uncharged and massed fibers and permit the separated and charged fibers to be deposited individually into the pile.

The control of humidity has been mentioned above. The fibers commonly used in making piles, for example, fibers of rayon, silk, and cotton and animal hairs such as those comprising wool and rabbit fur, are of small diameter and have great surface area as compared with their mass. They are, therefore, quickly and positively influenced by the moisture content of the medium in which they are suspended. The conductivity, at least the surface conductivity, of the fibers is increased by the sorbed moisture and this alters the rate of distribution of the charges upon the fibers and the manner in which they are moved and oriented in the electric field. It has been found that when the relative humidity of the air carrying the fibers is below 40 percent the fibers are noticeably slower in depositing and forming a pile. A relative humidity above 80 percent, on the other hand, tends to cause rapid deposition, but not in an orderly manner; treeing and undesirable massing of the fibers result. With the means illustrated broadly in Fig. 2 and described above, the air can readily be maintained with humidity values between 45 and 75 percent of saturation, a humidity range in which deposition is quite satisfactory.

In the embodiment of the invention shown in Fig. 3, the fibers are suspended in an air stream, projected upwards into an electric field, further moved upwards by action of the electric field, and deposited on an adhesive covered surface. Fan 85 for moving the air is rotated by motor 87 within a short tube 86 which is supported by adjustable members 88, 89, within casing 90. Supported upon and above tube 86 is a hood 90 with a top 91 of metal screen or other suitable open mesh material. Within hood 90 is a scraping mechanism 92 comprising a plurality of contact members 93 which, upon rotation of mechanism 92, by means preferably outside casing 90 and not shown, pass in rubbing contact over the inner surface of screen 91. A transverse plate 94 within tube 86 is for the purpose of preventing rotation of the air stream leaving tube 86.

An electrode 95 is suspended from cover 96

of casing 99 by members 97 which are mounted on springs 98. Electrode 95 can be moved downwards if sufficient force is exerted upon it to overcome springs 98, but it cannot move upwards because of stops 99. An anvil 100 with a transversely extending slot 101 is mounted on electrode 95. Within slot 101 is rapping member 102 which is dependent from rod 103 which is in turn dependent from yoke 104 which rides on cam 107. Rod 103 is vertically movable in bearings 105 and 106 and when yoke 104 drops off the high point of cam 107, spring 108 causes hammer member 104, which is positively attached to rod 103, to strike strongly upon anvil 100 and suddenly move and vibrate electrode 95.

An electric field for the depositing of fibers can be established between screen 91 and electrode 95 if either of these members is properly insulated. But it has been found more convenient and more efficient and in general safer to introduce an intermediate member 110 between the members mentioned. Member 110 is shown as a screen, preferably of one-quarter inch or coarser mesh, although closer mesh can be used if the screen is effectively shaken. Screen 110 is bounded by a rounded band 111 and this is supported by a plurality of members 112 and 113 which can reciprocate in bearings 114 and 115 within insulating supports 116 and 117, respectively. The insulators 116 and 117 are fastened by clamping members 118 as closures over holes 119 and 120, respectively, in the walls of casing 98. Member 113 passes completely through insulator 117 and so functions as an inlet conductor for electric current supplied through conductor 122 and as a connection to the agitating mechanism designated by numeral 121. A connecting link 122 of insulating material is inserted between member 113 and agitating mechanism 121 so the latter may be maintained at ground potential.

The apparatus shown in Fig. 3 is commonly used to build piles upon the surfaces of paper and textile fabrics. Roll 123 indicates a supply of cloth that is guided by rolls 126 and 127 to and from the under surface of electrode 95. Rolls 128, 129, in adjustable carriage 130, position travelling cloth sheet 126 as it is coated with adhesive from a spreading device 132 similar to those used in coating so-called oil cloth. The fibers or other pile forming elements are introduced into the apparatus through supply bin 131, a plunger with handle 133 being used to force the fibers downwards when necessary. Air, or gases for conditioning the air or other gaseous medium within the apparatus, can be brought in through pipe 135 from any suitable supply as indicated by chamber 136.

In operating the apparatus shown in Fig. 3, the high potential side of a source of unidirectional current is connected to conductor 123, the other side being connected to conductor 124 and to ground. The devices, not shown, for drawing sheet 126 through the apparatus, are set in motion and adhesive is applied to said sheet by spreader 130. Motor 97 is started and fibers are fed into the air current set up by fan 98. Scraper 92 is made to revolve. The volume and velocity of air passing through screen 91 is regulated by altering the speed of motor 97 and by altering the air inlet to the fan by raising or lowering sleeve 96 with adjustable supports 98, 99. It should be pointed out that when the fibers are easily disentangled and separated by the fan, screen 91 and scraper 92 are not needed and can be removed, a funnel a few inches high on top of sleeve 96 being then used to direct the fibers towards the electrodes above.

Adjustments in the position of screen electrode 110 can be made through clamps 118, but in general the position of electrode 110 is definitely fixed at from two and one-half to three and one-half inches below, and parallel to, electrode 95. Changes in the strength of the electric field can be made by controlling the electric circuit conditions. The voltage difference impressed between the electrodes, as described, is from 25,000 to 50,000 volts and the screen electrode 110 is commonly made negative except where it is advisable to alternate the polarity of the field.

As the fibers begin to deposit on sheet 126, the means, not shown, for rotating cam 107 is set in motion to turn cam 107 at from 20 to 80 R. P. M. This causes sheet 126 to be rapped rigorously by member 102 where it passes under slot 101 and imparts a more gentle vibration to all of that portion of sheet 126 which is held against the under side of electrode 95. Any fibers not attached to sheet 126 by the adhesive are thus jarred away from the pile to be recirculated. In the use of this construction and with this method of operation it is an easy matter to cause the unattached fibers to leave the pile because the force of gravity pulls directly away from the pile surface and the horizontal components of the air stream forces sweep the fibers along to the sides of the apparatus, down which they are carried to the fan inlet.

It is an important object in the present invention to energize the electrodes comprised in the apparatus described above in effective manner. An electric circuit for such purpose is diagrammatically illustrated in Fig. 1. A low voltage alternating current source 140, say at 220 volts and 60 cycles, is connected through a voltage control resistance 141 and a double throw reversing switch 142 to a step up transformer 144. The high potential terminals of the transformer are connected to stationary shoes 145 and 146, respectively, of mechanical rectifying switch 147. The switch is turned by synchronous motor 150 in synchronism with the supply current, with the result that stationary shoes 148 and 149 of the rectifier are always connected to the high potential current supply at constant polarity, that is, one shoe is always positive and the other is always negative. Shoe 148 is shown connected through conductor 156 and dampening or loading resistance 152 and shunting switch 153 to ground 6 and the grounded parts of the pile forming apparatus through conductors 4 and 16. Shoe 146 is shown connected to insulated electrode 1 through conductors 155 and 3. Fibers can be most effectively charged, oriented, and deposited with an electric field of constant polarity and a direct or rectified current source is preferably utilized, therefore, in energizing the electrodes. But it has been discovered that, in the use of a constantly applied electric field, certain undesirable conditions become emphasized. Treeing of fibers, once begun, tends to continue and makes it necessary to operate the securing air streams and rapping devices with great diligence. Also with a constantly applied potential a sheet of insulating material being piled becomes very strongly attracted to the electrode over which it is passing. It has been found that these tendencies can be checked if the polarity of the electric field is occasionally reversed. This is done in the circuit of Fig. 1, for example, by operating reversing switch 142 with an automatic device,

not shown, that causes the grounded side of the circuit, connected to shoe 188, to be alternately negative, for example, for two to five seconds and then positive for one-half to two seconds. The high voltage electrode 1 is at opposite polarity to that of electrode 2 during the same periods, of course.

Very rapid reversals, in synchronism with the alternating current source, have been found advantageous at times. This condition is obtained by shifting rectifier 167 with relation to the revolving field of synchronous motor 166 by clamping adjustable coupling 151 in a different circumferential position. In this manner electrode 1 can be maintained, say, positive and at high potential, for most of the half cycle and negative and at lower voltage for a short part of the cycle. In other words, through what might be called a poor setting of the rectifier, rectification is not complete and a short energization at opposite polarity follows or precedes each half wave of given polarity. "Stoss" or steep wave front impulses have also been used with good effect in some depositions. This condition is obtained by opening switch 183 and inserting a condenser 187 and a spark gap 186 into the circuit as shown. The Stoss circuit will be more effective if a load 188 requiring considerable current is placed across leads 184 and 185.

Vacuum tube or hot cathode rectifiers can be used instead of a mechanical rectifier. Fig. 4 shows the use of a single hot cathode rectifier 190 which will permit half wave energization at constant polarity. To effect reversal of polarity with this type of rectifier in the circuit, the reversing means must be placed on the high potential side of the transformer as illustrated by the use of switch 180. Switch 180, made up of conducting members 181 supported by insulating member 182, will, upon rotation or upon oscillation through 90 mechanical degrees, alternately connect terminal 183 of rectifier 190, which is always negative, with high potential lead 185 and with ground. In oscillating switch 180, a longer pause is made at one set of connections than at the other, thus permitting energization at one polarity for longer periods than at the other polarity. This asymmetrical timing of polarity reversals is not necessary, but has been found advantageous in connection with the present invention.

The apparatus and methods described above have been found to be particularly advantageous in handling pile-forming fibers of relatively great length, for example, from ⅛ to ¼ inch in length and longer.

I claim:

1. Apparatus for forming a pile upon a surface by affixing attenuated materials thereto comprising opposed electrode means insulated from each other, one of said electrodes being foraminous, means for establishing an electric field between said electrodes, means for establishing a gas stream through said foraminous electrode and into the electric field between said electrodes, and means for introducing pile forming material into said gas stream.

2. Apparatus for forming a pile upon a surface by affixing attenuated materials thereto comprising superposed electrode means insulated from each other, one of said electrodes being foraminous, means for establishing an electric field between said electrodes, means for establishing a gas stream through said foraminous electrode and into the electric field between said electrodes, and means for introducing pile forming material into said gas stream.

3. Apparatus for forming a pile upon a surface by affixing attenuated materials thereto comprising superposed electrode means insulated from each other, the upper of said electrodes being foraminous, means for establishing an electric field between said electrodes, means for establishing a gas stream through said foraminous electrode and into the electric field between said electrodes, and means for introducing pile forming material into said gas stream.

4. Apparatus for forming a pile upon a surface by affixing attenuated materials thereto comprising superposed electrode means insulated from each other, the lower of said electrodes being foraminous, means for establishing an electric field between said electrodes, means for establishing a gas stream through said foraminous electrode and into the electric field between said electrodes, and means for introducing pile forming material into said gas stream.

5. Apparatus for forming a pile upon a surface by affixing attenuated materials thereto comprising opposed electrodes insulated from one another, means for establishing an electric field between said electrodes, means for passing a web of foundation material through said field adjacent one of said electrodes, means constituting a conduit for directing a gas stream between said electrodes, means for imparting motion to the gas stream in said conduit, means for introducing pile forming material into said gas stream and means in said conduit for breaking up clumps of the pile forming material.

6. Apparatus for forming a pile upon a surface by affixing attenuated materials thereto comprising superposed electrode means insulated from each other, the lower of said electrodes being foraminous, means for establishing an electric field between said electrodes, means for agitating the foraminous electrode, means for establishing a gas stream through said foraminous electrode and into the electric field between said electrodes, and means for introducing pile forming material into said gas stream.

7. Apparatus for forming a pile upon a surface by affixing attenuated materials thereto comprising opposed electrode means insulated from each other, one of said electrodes being foraminous, means for establishing an electric field between said electrodes, means for passing a web of foundation material through said electric field adjacent the electrode opposing the foraminous electrode, means for establishing a gas stream through said foraminous electrode and into the electric field between said electrodes, and means for introducing pile forming material into said gas stream.

8. A method of forming pile-surfaced materials, which comprises establishing an electric field between opposed electrode structures, positioning an adhesive-surfaced foundation material between said electrodes, suspending masses of pile forming materials in a gas stream, disintegrating said masses of pile forming material in said gas stream, and directing the gas stream containing the suspended material into the region of the electric field.

9. A method of forming pile-surfaced materials, which comprises establishing an electric field between opposed electrode structures, positioning an adhesive-surfaced foundation material between said electrodes, suspending masses of pile forming materials in a gas stream, disin-

[fol. 688]

tegrating said masses of pile forming materials by passing said gas stream through a foraminous member, and directing the gas stream containing the suspended material into the region of the electric field.

10. A method of forming pile-surfaced materials, which comprises establishing an electric field between opposed electrode structures, positioning an adhesive-surfaced foundation material between said electrodes, suspending masses of pile forming materials in a gas stream, disintegrating said masses of pile forming materials by passing said gas stream through a foraminous member while agitating the foraminous member, and directing the gas stream containing the suspended material into the region of the electric field.

11. A method of forming pile-surfaced materials, which comprises establishing an electric field between opposed electrode structures, positioning an adhesive-surfaced foundation material between said electrodes, suspending pile forming materials in a gas stream, directing the gas stream containing the suspended material into the region of the electric field, and periodically alternating the polarity of the electric field with periods of constant polarity of at least about one-half second.

12. A method of forming pile-surfaced materials, which comprises establishing an electric field between opposed electrode structures, positioning an adhesive-surfaced foundation material between said electrodes, suspending pile forming materials in a gas stream, directing the gas stream containing the suspended material into the region of the electric field, and periodically alternating the polarity of the electric field with a period substantially greater than that of commercial alternating current.

13. A method of forming pile-surfaced materials, which comprises establishing an electric field between opposed electrode structures, positioning an adhesive-surfaced foundation material between said electrodes, suspending pile forming materials in a gas stream, and directing the gas stream containing the suspended material through one of said electrode structures into the region of the electric field while agitating the electrode through which the gas stream passes.

14. A method of forming pile-surfaced materials, which comprises establishing an electric field between opposed electrode structures, positioning an adhesive-surfaced foundation material between said electrodes, suspending pile forming materials in a gas stream, directing the gas stream containing the suspended material through one of said electrode structures into the region of the electric field while agitating the electrode through which the gas stream passes, and periodically alternating the polarity of the electric field with periods of constant polarity of at least about one-half second.

15. In the production of piled surfaces by passing a stream of gas containing pile forming material adjacent an adhesive-surfaced foundation material positioned in an electric field, the step comprising adding a conditioning medium to the stream of gas whereby the conductivity of the pile forming material is altered.

16. In the production of piled surfaces by passing a stream of gas containing pile forming material adjacent an adhesive-surfaced foundation material positioned in an electric field, the step comprising regulating the humidity of the gas stream to a predetermined degree.

17. In the production of piled surfaces by passing a stream of gas containing pile forming material adjacent an adhesive-surfaced foundation material positioned in an electric field, the step comprising adding gaseous medium of predetermined humidity to said gas stream.

18. In the production of pile surfaces by passing a stream of gas containing pile forming material adjacent an adhesive-surfaced foundation material positioned in an electric field, the step comprising maintaining the humidity of the gas stream at a predetermined degree between about 40 percent and about 90 percent relative humidity.

19. A method of forming piled surfaced materials, comprising establishing an electric field between opposed electrode structures, bringing pile forming fibers into said electric field adjacent an adhesive-surfaced foundation material, and controlling the electrical deposition of the fibers by controlling the surface conductivity of the fibers.

20. In the production of piled surfaces by passing a stream of gas containing electrically charged pile forming material adjacent an adhesive-surfaced foundation material positioned in an electric field, the step comprising regulating the humidity of the gas stream to a predetermined degree.

21. Apparatus for forming a pile upon a surface by affixing attenuated materials thereto comprising opposed electrode means insulated from each other, one of said electrodes being foraminous, means for establishing an electric field between said electrodes, means for establishing a gas stream through said foraminous electrode and into the electric field between said electrodes, means for introducing pile forming material into said gas stream, said foraminous electrode having openings adapted to break clumps of said pile forming material into individual fibers.

22. Apparatus for forming a pile upon a surface by affixing attenuated materials thereto comprising opposed electrode means insulated from each other, one of said electrodes being foraminous, means for establishing an electric field between said electrodes, means for establishing a gas stream through said foraminous electrode and into the electric field between said electrodes, means for introducing pile forming material into said gas stream, and means cooperating with said foraminous electrode for breaking clumps of said pile forming material into individual fibers.

23. Apparatus for forming a pile upon a surface by affixing attenuated materials thereto comprising opposed electrodes insulated from one another, means for establishing an electric field between said electrodes, means constituting a conduit for directing a gas stream between said electrodes, means for imparting motion to the gas stream in said conduit, means for introducing pile forming material into said gas stream and beating means in said conduit for breaking up clumps of the pile forming material.

24. A method of forming pile-surfaced materials which comprises establishing an electric field between opposed electrode structures, positioning an adhesive-surfaced foundation material between said electrodes, bringing pile-forming fibers into the electric field and periodically alternating the polarity of the electric field with periods of constant polarity of at least about one-half second.

25. A method of forming pile-surfaced materials, comprising establishing an electric field be-

tween opposed electrode structures, bringing pile-forming fibers into said electric field adjacent an adhesive-surfaced foundation material, and controlling the electrical deposition of the fibers by controlling the conductivity of the fibers.

26. A method of forming pile-surfaced material, comprising establishing an electric field between opposed electrode structures, bringing pile-forming fibers into said electric field adjacent an adhesive-surfaced foundation material, and controlling the electrical deposition of the fibers by controlling the moisture content of the fibers.

27. A method of forming pile-surfaced materials which comprises establishing an electric field between opposed electrode structures, positioning an adhesive-surfaced foundation material between said electrodes, bringing pile-forming fibers into the electric field and periodically alternating the polarity of the electric field with potentials of substantially different voltage in periods of alternate polarity.

28. A method of forming pile-surfaced material which comprises establishing an electric field of periodically alternating polarity, positioning an adhesive-surfaced foundation material in said field and bringing comminuted fibrous material into the field in condition to be deposited thereon, thereby to produce a uniform pile surface having the fibers oriented in endwise position on the adhesive surfaced material.

29. In the production of pile-surfaced material, the method which comprises feeding along a predetermined path an adhesive-coated foundation material creating an electrostatic field of alternating polarity intersecting said path and feeding comminuted fibrous material into said field in condition to be deposited thereby to produce a uniform pile surface having the fibers oriented in endwise position on the adhesive surface on the foundation material in said field.

30. Apparatus for forming pile-surfaced material comprising means for establishing an electric field of periodically alternating polarity, means for continuously introducing into said field adhesive-surfaced foundation material and means for introducing pile-forming fibers into said field.

31. Apparatus for forming pile-surfaced material comprising means for feeding along a predetermined path a foundation material, means for coating the foundation material with adhesive, means for creating an electric field of alternating potential intersecting said path and means for introducing pile-forming fibers into said field.

HARRY A. WINTERMUTE.

[fol. 690]

Sept. 12, 1939. A. F. MESTON 2,173,078

PRODUCTION OF PILE SURFACES

Filed Oct. 4, 1933 2 Sheets-Sheet 1

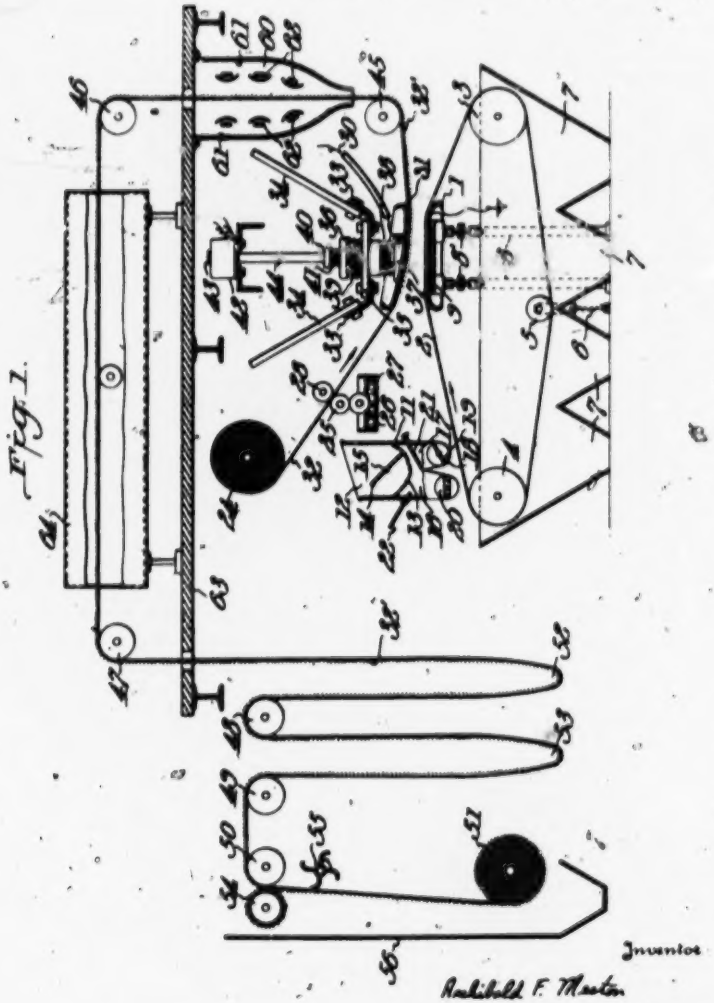

Fig. 1.

Inventor

Archibald F. Meston

By Potter, Pierce & Schiffer

Attorneys

[fol. 691]

Sept. 12, 1939. A F MESTON 2,173,078

PRODUCTION OF FILE SURFACES

Filed Oct 4, 1933 2 Sheets-Sheet 2

Fig. 2.

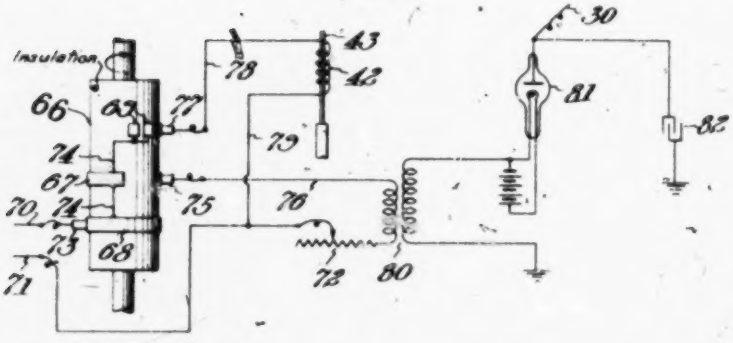

Fig. 3.

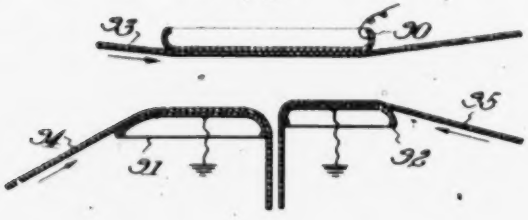

Inventor

Archibald F. Meston

By Potter, Pierce & Schaffer

Attorneys

[fol. 692]

Patented Sept. 12, 1939 2,173,078

UNITED STATES PATENT OFFICE

2,173,078

PRODUCTION OF PILE SURFACES

Archibald F. Maston, Middlesex Borough, N. J., assignor, by mesne assignments, to Baer-Manning Corporation, a corporation of Massachusetts

Application October 4, 1933, Serial No. 692,201

24 Claims. (Cl. 91—8)

This invention relates to the production of pile-surfaced materials and is particularly directed to apparatus and methods for operation adapted for the efficient production of such materials involves positioning an adhesive coated foundation material in an electric field and supplying pile-forming fibers thereto while in said field. It has been found that improvements in the effectiveness of the production of pile-surfaced materials by said process may be obtained by the use of novel forms of apparatus and methods of operation which will be more particularly described hereinafter.

Among the novel features and objects of the present invention are included the use of a unidirectional electric field, the provision of electrodes adapted to provide an electric field substantially free of corona discharge, the disposition of the electrodes whereby the surface to be piled is positioned above the pile-forming material so that the material is moved upward against gravity in depositing it on the surface, the provision of means for continuously or intermittently agitating the upper electrode and/or object being coated to effect the removal of surplus pile-forming material and prevention of tossing of the material, the provision of one or more traveling belts or the like for bringing the pile-forming material into the electric field, and the intermittent application of potential between the electrodes, which is advantageous in causing agglomerated or flocculated masses of fibers to break up.

These and other features and objects of the invention will be more particularly described for the purpose of illustration with reference to the accompanying drawings, in which:

Fig. 1 is a diagrammatic sectional elevation of a system of apparatus embodying the principles of the invention;

Fig. 2 is a diagrammatic plan of an electrical circuit adapted for practicing the invention; and

Fig. 3 is a fragmentary section of a modified form of the invention providing a plurality of fiber supplying means.

In Fig. 1 the electric field which causes the deposition of the pile-forming fibers is set up between the two electrodes 1 and 31. These electrodes, as shown, are formed with relatively smooth, flat surfaces and rounded edges in order that a strong field of, for example, 4,000 to 50,000 volts (peak) per inch can be set up between them without the formation of corona discharge. The avoidance of corona discharge results in an improved uniformity of deposition. For purposes of convenience electrode 1 is preferably held at ground potential, while electrode 31, insulated from ground as will be later described, is continuously maintained at, or is intermittently brought to high potential by connecting it to a high potential current source through conductor 30. The electric field set up is unidirectional, the upper electrode preferably being negative with relation to the bottom electrode.

The sheet material 32 upon which the pile is to be formed is shown passing over the bottom surface of electrode 31. Sheet 32 need not actually touch electrode 31, but it is convenient to have it pass across the surface of that electrode with sliding contact, as shown. A belt 2, is used to carry the pile-forming fibers into the electric field. This passes over electrode 1 around pulleys 3 and 4 and under a tightening idler 5 which is held against the inner surface of the belt by springs 6. A driving mechanism, not shown, such as a variable speed motor and reduction gear, turns pulley 3 at a speed which moves the belt through the electric field at the desired rate. The speed of travel of the feed belt may be widely varied. Increasing its speed relative to the speed of web 32 increases the heaviness of the pile formed on the latter. Excess material which is not attracted to and deposited upon sheet 32 falls into hoppers 7 to be reused later. Straddling the hoppers are uprights, two of which are shown at the far side at 8, supporting a transverse member 9 upon which electrode 1 rests. Uprights 8 include jackscrews 8' which make possible any desired adjustment of the distance between the electrodes and their relative position.

It is desirable that the pile-forming material, for example rayon flocks, be spread evenly over belt 2 which carries it into the electric field. Belt 2 is preferably an electrical conductor but it may be of canvas or other poorly conducting material. It passes under apparatus 11 consisting of a supply hopper 12 with a bottom of wire screen 13 of relatively coarse mesh and with a scraping device 14 which revolves around rod 15, scraping screen 13 twice in each revolution, and two dependent smaller hoppers 16 and 17, each of which has a screen bottom and an agitator or scraper. Hopper 17 is shown with end cover removed to illustrate the construction, the screen being indicated at 18 and the scraper at 19. Ordinarily a cover is over the end of hopper 17 similar to that shown at 20 which covers the end of hopper 16. Sliding plates 21 and 22 permit the closing of hopper 16 or 17, respectively,

when there is need for removing an end cover to remove unreasonable masses of material that have collected. In operation hopper 12 is filled evenly from end to end with pile-forming material. Scraper 14 is turned either manually or by a power device so that the material is scraped through 13 in semi-broken up condition and falls into hoppers 16 and 17. Scraper 19 in hopper 17 and a similar scraper in hopper 16 work the material through the fine screens in the bottom of these hoppers and it is disseminated evenly over moving belt 2.

The sheet to be coated is usually supplied in a roll as shown at 24. This roll is suspended in an elevated position so that the sheet, before entering the electric field between electrodes 1 and 31, can be coated with adhesive by such apparatus as that shown, comprising an applying roll 26 which is coated with adhesive by a supply roll 26 which is rotated partly submerged in liquid or semi-liquid adhesive in trough 27. Other suitable means may be used for coating the surface of the sheet, but the above has been found very satisfactory for several common types of adhesive. A roll 28 assists in supporting sheet 22 as adhesive applying roll 26 presses against it.

Electrode 31 is supported at one or more points depending upon its width. When treating material 2 to 3 feet wide two supports are ordinarily necessary. These supports depend from angles 33 which extend transversely to but above sheet 22. The angles in turn depend from insulating means 34 which may be rods or bars of Bakelite composition or other insulating material having appreciable tensile strength. The support itself consists of a flange or yoke 35 in which there is suspended a member 36 which in turn is fastened to boss 37 attached to the back surface of electrode 31. Springs 38 and 39 hold member 36 in a yielding position within flange 35. A hole extends part way through member 36 and inserted into this hole to within say ¼" of the bottom thereof is a member 40 which is utilized as a hammer when it is desirable to shake or vibrate 31. Spring 41 is of such length and stiffness that it supports the weight of member 40 and keeps it from resting on the bottom of the hole within member 36. Hammer 40 is operated by a solenoid 42 which, when energized, pulls down on core 43 which in turn pushes down on insulating rod 44 compressing spring 41 and causing the bottom of hammer member 40 to strike the bottom of the hole within 36.

Sheet 22, after being drawn between the electrodes and having a pile deposited on it, passes as 22' over rolls 45, 46, 47, 48, 49 and 50 and is rolled upon mandrel 51 or is otherwise disposed of. Some or all of these rolls are mechanically rotated. By using appropriate controls known to the arts, but not shown in the figure, the rotating means can be operated interdependently with the result that the sheet is kept taut where desired and caused to sag, as at 52, 53, where desired. Between roll 49 and mandrel 51 are positioned the auxiliary means for drying and combing the piled sheet. The specifications and arrangement of the necessary equipment will vary with the adhesive used and other factors. In short cases a dryer immediately follows the depositing means and this may take the form of a chamber 60 with inner walls 61 comprising radiating surfaces which receive and reflect heat furnished by electric resistance units 62. If valuable solvents are evaporated from the adhesive while the sheet is passing through chamber 60, suitable condensing or absorbing equipment can be provided to collect them, but ordinarily the vapors evolved are conducted to atmosphere by simple ventilating means. If the adhesive is of the nature of rubber latex it is desirable to vulcanise it after drying. Apparatus suitable for this purpose can be placed on a platform 63 above the depositing apparatus, as indicated by numeral 64. After cooling, provided by movement through loops 52, 53, the pile is combed or brushed by means of 54, the loose fibers are shaken off by rotating rapping device 56, and any other finishing operations, not indicated, such as shearing, are performed. In rolling or folding the finished product care is taken to not damage the pile, and to this end spacing strips are inserted and other precautions known to the velvet trade are taken.

Electrodes 1 and 31 may be flat and parallel, but advantages have been found in so shaping and positioning the electrodes that they are farther apart at the side where the pile material enters than on the opposite side. This causes the fabric being formed to be subjected to a progressively stronger field as it passes along and is being built up with additional fibers. A very strong field in the initial stage of deposition is more apt to cause the fibers to flatten against the adhesive or the sheet than is a weak field; while a strong field at the final stage of deposition is advantageous in that it forces additional fibers down into an already built up pile.

Certain difficulties in operation may be encountered when a strong electric field exists constantly between electrodes 1 and 31. Some of the fibers mat together and others string out or "tree" between the electrodes if the field is maintained continuously, and the desired result of keeping the fibers in parallel arrangement and projecting one end of each fiber into the adhesive may not be obtained. It has been found advantageous to lower the potential at which the upper electrode is held, or to reduce it to ground potential intermittently, for example, every few seconds. While the electric field is weak, the upper electrode is advantageously vibrated or shaken to remove unattached or loosely held fibers. A satisfactory cycle consists of from two to ten seconds with a strong field and one to three seconds with a weak field or no field at all. An electric circuit for furnishing such conditions is shown in Fig. 2.

Fig. 2 illustrates an electric circuit and control which may be used in energizing the apparatus shown in Fig. 1. Alternating current at low potential (110 or 220 volts) is supplied through leads 70 and 71. Lead 71 is connected through a voltage control resistance 72 to one end of the low voltage winding of step up transformer 68. It is also connected through a shunt lead 73 to one end of solenoid 42. Lead 70 contacts through brush 73 with a slip ring 66 on drum 65. Connected to ring 66 by conductor 74 are other rings or surfaces 67 and 69 for making contact with brush 75 and brush 77 which connect through leads 76 and 78, respectively, to transformer 69 and solenoid 42. When drum 65 is rotated, transformer 69 is intermittently energized as is solenoid 42. It is not difficult to arrange the contacts on drum 65 and rotate it at such speed that transformer 69 is energized for say four seconds and then de-energized for one second while solenoid 42 is being intermittently energized to rap electrode 31 two or more times.

A steady pull on the fibers while they are being deposited or attached is desirable and the energy impulses set up by transformer 69 are rectified by

[fol. 694]

any practical means before they reach electrode 31. A Lemp type mechanical rectifying switch has given satisfactory results, but in Fig. 2 a hot cathode type of rectifying tube 81 is shown for this purpose. It is known that two tubes with a double winding on the transformer or four tubes properly connected will permit the use of both sides of the voltage wave, but tests have shown that satisfactory results can be obtained with one tube through which one side only of the voltage wave passes if electrode 31 is well insulated. Electrodes 1 and 31 and the air between make up a condenser which tends to even out the current supply, and rectifying tube 81 prevents any of the current from returning to the transformer and so reducing the voltage impressed across the electrodes. Where it is desirable to reduce the voltage across the electrodes frequently, say by grounding electrode 31, the disposal of a high capacity charge is an inconvenience and in such cases condenser 82 is not provided. Instead, a grounding switch actuated by, or, at least, in synchronism with, drum 66 is connected to line 30.

Fig. 3 illustrates a modification of the invention whereby the pile-forming fibers may be supplied in two separate successive portions. Electrode 96 and web 93 correspond to electrode 31 and web 32, respectively, of Fig. 1. The corresponding lower electrode 1 of Fig. 1 is represented in Fig. 3 by two separate electrodes 91 and 92, each cooperating with separate supply belts 94 and 95 to supply pile-forming materials in successive portions. When desirable one of the belts may be positioned to supply the fibers with closer spacing to the surface to be coated than to the other. Through the greater flexibility of operation made possible by the modification of the invention shown in Fig. 3 it is possible to obtain pile surfaces of increased thickness of pile and uniformity.

Non-uniformity of pile may not be objectionable or may be desirable in some instances and the results obtained from electrodes which have not been carefully shaped and positioned to prevent corona discharge and local highly stressed electric fields may be satisfactory. But carefully conducted experiments made to determine the shape of electrodes best suited for the production of evenly formed piles have shown that distinct advantages reside in those just described.

I claim:

1. Apparatus for the production of pile-surfaced materials comprising a plurality of electrode means, circuit elements connecting said electrode means to provide an electric field therebetween, the opposing faces of said electrode means being free from elements of small radius of curvature, means for positioning an adhesive-coated web of foundation material in said field adjacent one of said electrode means, and means for supplying pile-forming fibers adjacent the other of said electrode means.

2. Apparatus for the production of pile-surfaced materials comprising a plurality of electrode means, circuit elements connecting said electrode means to provide an electric field therebetween, the radii of curvature of the elements of the opposing faces of said electrode means being so large that no corona discharge is developed at potential differences of from 4,000 to 50,000 volts per inch, means for positioning an adhesive-coated web of foundation material in said field adjacent one of said electrode means, and means for supplying pile-forming fibers adjacent the other of said electrode means.

3. Apparatus for the production of pile-surfaced materials comprising a plurality of electrode means, circuit elements connecting said electrode means to provide an electric field therebetween, the opposing faces of said electrode means being positioned at an acute angle to each other, means for positioning an adhesive-coated web of foundation material in said field adjacent one of said electrode means, and means for supplying pile-forming fibers adjacent the other of said electrode means.

4. Apparatus for the production of pile-surfaced materials comprising a plurality of electrode means, circuit elements connecting said electrode means to provide an electric field therebetween, the opposing faces of said electrode means being positioned at an acute angle to each other, means for passing an adhesive-coated web of foundation material through said field adjacent one of said electrode means and in the direction of the apex of the angle formed by the electrode means, and means for supplying pile-forming fibers adjacent the other of said electrode means.

5. Apparatus for the production of pile-surfaced materials comprising superposed electrode means, circuit elements connecting said electrode means to provide an electric field therebetween, the lower of said electrode means comprising a plurality of electrode members positioned at different distances from said upper electrode means, means for positioning an adhesive-coated web of foundation material in said field adjacent the upper electrode means, and means for supplying pile-forming fibers adjacent each of said lower electrode members.

6. In an apparatus for the production of pile-surfaced materials by electrostatic deposition including opposed electrode members, means for impressing an intermittent unidirectional potential across said electrode members.

7. In an apparatus for the production of pile-surfaced materials by electrostatic deposition, opposed electrode members, and electrical connections therebetween including automatic means for impressing a unidirectional potential of intermittently varying strength across said electrode members.

8. In an apparatus for the production of pile-surfaced materials by electrostatic deposition, opposed electrode members, and means associated therewith for agitating one of said electrode members.

9. In an apparatus for the production of pile-surfaced materials by electrostatic deposition including opposed electrode members, means for impressing a unidirectional potential of intermittently varying strength across said electrode members, and means for agitating one of said electrode members during the intervals of decreased potential.

10. In an apparatus for the production of pile-surfaced materials by electrostatic deposition including superposed electrode members, rapping means for agitating the upper of said electrode members.

11. In an apparatus for the production of pile-surfaced materials by electrostatic deposition including superposed electrode members, electrically actuated rapping means for intermittently agitating the upper of said electrode members.

12. A process for the production of pile-surfaced materials which comprises positioning an adhesive-coated web of foundation material between superposed electrodes and adjacent the upper of said electrodes, supplying pile-forming

fibers adjacent the upper surface of the lower of said electrodes, and intermittently impressing a unidirectional electric potential across said electrodes.

13. A process for the production of pile-surfaced materials which comprises positioning an adhesive-coated web of foundation material between superposed electrodes and adjacent the upper of said electrodes, supplying pile-forming fibers adjacent the upper surface of the lower of said electrodes, impressing an electric potential across said electrodes and subjecting said web to agitation.

14. A process for the production of pile-surfaced materials which comprises positioning an adhesive-coated web of foundation material between superposed electrodes and adjacent the upper of said electrodes, supplying pile-forming fibers adjacent the upper surface of the lower of said electrodes, impressing an electric potential across said electrodes and subjecting said web to intermittent agitation.

15. A process for the production of pile-surfaced materials which comprises positioning an adhesive-coated web of foundation material between superposed electrodes and adjacent the upper of said electrodes, supplying pile-forming fibers adjacent the upper surface of the lower of said electrodes, and impressing an electric potential of intermittently varying strength across said electrodes.

16. A process for the production of pile-surfaced materials which comprises positioning an adhesive-coated web of foundation material between superposed electrodes and adjacent the upper of said electrodes, supplying pile-forming fibers adjacent the upper surface of the lower of said electrodes, impressing an electric potential of intermittently varying strength across said electrodes and subjecting said web to agitation in the intervals of decreased potential.

17. In a process for the production of pile-surfaced material, the step comprising establishing an electrical field extending in a substantially vertical direction, coating a surface to be piled with adhesive and positioning in it the upper portion of said electric field with the coated surface directed downwardly, supplying pile-forming elements to the electric field below said surface and jarring from the surface pile-forming elements electrostatically raised to the surface but not firmly attached thereto.

18. Apparatus for forming pile surfaces comprising electrode means insulated from each other, means for establishing an electric field between said electrodes including a source of current and means for converting said current into periodically varying impulses of different electrical characteristics from said current and means for introducing pile-forming material into said electric field.

19. Apparatus for forming pile surfaces comprising electrode means insulated from each other, means for establishing an electric field between said electrodes including a source of alternating current and means for converting said alternating current into periodically varying impulses of different electrical characteristics from said alternating current and means for introducing pile-forming material into said electric field.

20. The method of producing pile-surfaced sheet material which comprises providing an electrical field of intermittently varying strength, positioning an adhesive-surfaced foundation material in said field and supplying pile-surface forming fibers to said field.

21. The method of producing pile-surfaced sheet material which comprises providing an electrical field of intermittently varying strength, passing an adhesive-surfaced foundation material through said field and supplying pile-surface-forming fibers to said field.

22. A process for the production of pile-surfaced materials which comprises establishing an electrical field between spaced electrodes, conducting an adhesive-coated web of foundation material betwen said electrodes, supplying to said field pile-forming fibers of a character which tend to tree therein, while impressing an electrical potential across the electrodes, and subjecting the web to agitation as it is conducted through the field, whereby treeing is minimized.

23. In an apparatus for the production of pile-surfaced material by electrostatic deposition, opposed electrode members, means for establishing an electrical field between said members, means for positioning an adhesive-coated web of foundation material between said electrode members, means for supplying to said field between said electrode members pile forming fibers which tend to tree therein, and means for agitating the web of foundation material while it is positioned within said field, whereby treeing is minimized.

24. The method of producing pile-surfaced sheet material which comprises providing an electrical field of intermittently varying strength, positioning an adhesive-surfaced foundation material in said field, supplying pile-surface forming fibers to said field, and agitating the foundation material while in said field.

ARCHIBALD F. MERTON.

[fol. 696]

5

CERTIFICATE OF CORRECTION.

Patent No. 2,173,078. September 12, 1939.

ARCHIBALD F. CRESTON.

It is hereby certified that error appears in the printed specification of the above numbered patent requiring correction as follows: Page 1, first column, line 5, before the word "involves" insert by a process which; and second column, line 32, for "member 8" read member 9; and that the said Letters Patent should be read with this correction therein that the same may conform to the record of the case in the Patent Office.

Signed and sealed this 21st day of November, A. D. 1939.

(Seal)

Henry Van Arsdale,
Acting Commissioner of Patents.

[fol. 697]

Sept. 26, 1939. A. F. MESTON ET AL. 2,174,328

FILED SURFACE IN PATTERN FORM

Original Filed Feb. 6, 1935 2 Sheets-Sheet 1

Fig. 1.

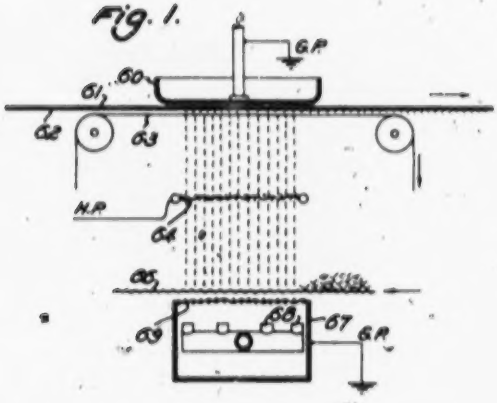

Fig. 2.

Fig. 3.

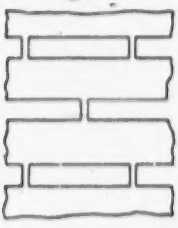

Inventors:
Archibald F. Meston
Harry A. Wintermute
By Potter, Pierce & Scheffler
Attorneys

[fol. 698]

Sept. 26, 1939. A. F. MESTON ET AL. 2,174,328

FILED SURFACE IN PATTERN FORM

Original Filed Feb. 6, 1935 2 Sheets-Sheet 2

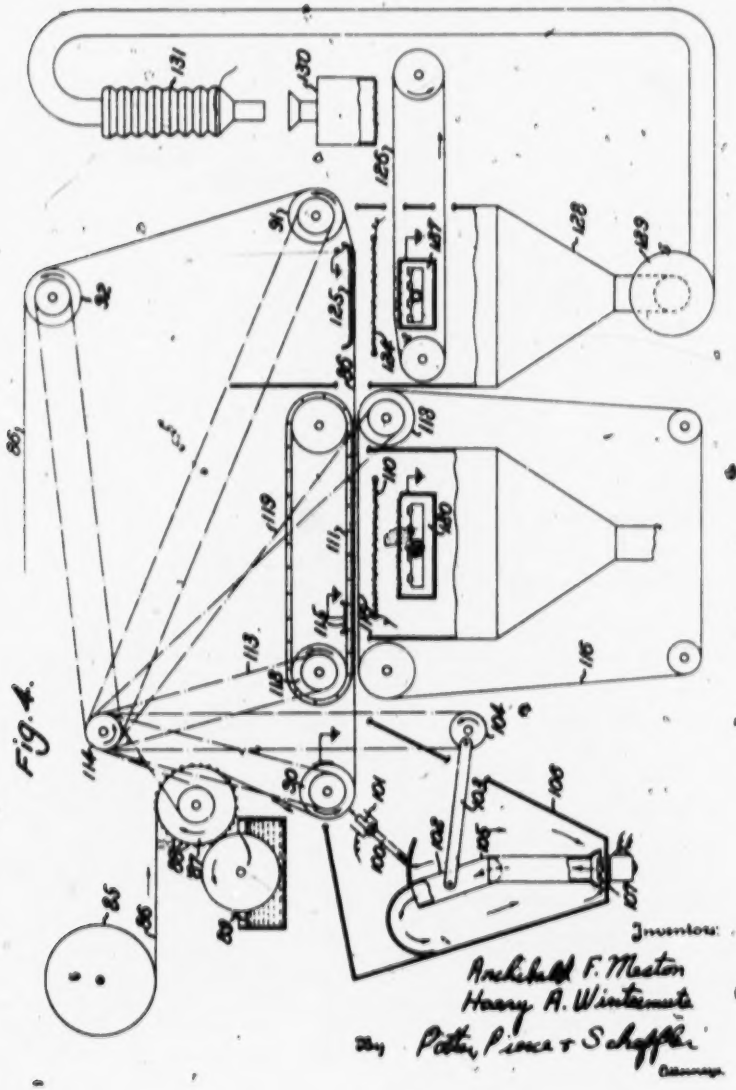

Fig. 4.

Patented Sept. 26, 1939

2,174,328

UNITED STATES PATENT OFFICE

2,174,328

PILED SURFACE IN PATTERN FORM

Archibald F. Meston, Round Brook, and Harry A. Wintermute, Plainfield, N. J., assignors, by mesne assignments, to Behr-Manning Corporation, a corporation of Massachusetts

Original application February 6, 1935, Serial No. 5,288. Divided and this application March 28, 1937, Serial No. 132,170

5 Claims. (Cl. 91—8)

This invention relates to coating and/or decorating surfaces with simulated piles in pattern form. It has to do in particular with apparatus and methods for making and controlling a non-uniform electric field used in the deposition of elongated particles on adhesive covered surfaces for the purpose of effecting a topical arrangement of the particles on the surfaces, for example, in pleasing patterns.

Fibers, such as rayon flocks, can be deposited in oriented position upon an adhesive covered surface if the surface is positioned in an electric field and fibers are introduced into the electric field in unrestrained manner. The conditions required for satisfactory deposition of fibers in the piling of surfaces are described in copending applications Serial No. 692,201, A. F. Meston, filed October 4, 1933; and Serial No. 699,456, H. A. Wintermute, filed November 23, 1933.

The piles made with the apparatus and methods used and described in the applications just mentioned are quite uniform in composition and appearance. Most of the fibers stand erect, perpendicular to the surface, making piles of monotonous evenness from a decorative standpoint. It has now been found that by suitable control of the electric field by means of which the fibers are deposited, and particularly by the use of a deliberately warped or discontinuous electric field, pleasing variations and definite patterns can be obtained in the pile.

Apparatus useful in carrying out the invention and several embodiments of the invention, including novel methods and products, are hereinafter described with particular reference to the appended drawings, in which:

Fig. 1 is a diagrammatic view, in side elevation, of apparatus for depositing fibers in pattern formation by utilizing a moving field stencil;

Figs. 2 and 3 show typical forms of field stencils used with the invention; and

Fig. 4 is a diagrammatic view in side elevation of apparatus for the production of material having a piled surface in pattern form, including the features of the present invention together with features more particularly described and claimed in our application Serial No. 5,288, filed February 6, 1935, of which the present application is a division.

In the apparatus of Fig. 1 a field controlling member is supported in an electric field established between a high potential electrode and a ground electrode. The field control or field stencil member is positioned in front of the surface being piled and is preferably at the same or nearly the same potential as the electrode just back of the sheet with the surface being piled. In the figure electrode 66 is preferably flat and is at ground potential. Electrode 64 is of reticulated construction or the like and is maintained at a high potential. Sheet 61, the under side 62 of which is to be piled, is moved through the electric field between electrodes 66 and 64, preferably just under and touching electrode 66, as shown. A member 63, advantageously formed as a belt with stencil-like perforations such as the diamond design shown in Fig. 2 or the slots shown in Fig. 3, is moved parallel with and at the same speed as sheet 61. It is held a short distance, for example, one-fourth inch, in front of adhesive covered surface 62. The fibers to be deposited are brought into the apparatus on a moving porous belt 60. When the fibers are carried by belt 60 over the top of wind box 67, compressed air issuing from nozzles 68 and passing through regulating means 69 blows through the interstices of belt 60 and blows the fibers up through electrode 64 and into the electric field for deposition on surface 62. Very definite patterns are made with the apparatus shown in Fig. 1 and they can be made very colorful if the sheet to be piled is passed through several partially shielded fields, each one depositing fibers of a different color.

Belt 63 can be made of wire or other attenuated members woven into a pattern and it will influence the deposition of the fibers comprising the pile by altering the electric field. Or belt 63 can be made up as a stencil and cause a pattern to be made by definitely covering portions of surface 62 and permitting flocks to be deposited only behind openings in the stencil. Besides the diamond pattern shown in Fig. 2, decorative designs, such as flowers, and commercial outlines comprising names, can be formed. Such stencil-like members effect the pattern not only mechanically but also effect it by locally altering the characteristics and intensity of the electric field and therefore they may be designated as "field stencils."

Fig. 4 is a diagrammatic view in side elevation of apparatus which may be used in successively applying the several embodiments of the invention which have been described in this application and our application Serial No. 5,288, filed February 6, 1935. A sheet 86 of the material to be piled, for example, a light weight, flexible but closely woven textile, is unwound from supply roll 88, passed over an adhesive applying roll 81, over positioning and tensioning rolls 90, 91

[fol. 700]

and 87, and through means, not shown, for finishing and storing the piled product. Roll 87 is shown with raised portions 88 to apply the adhesive from vessel 89 to the surface of sheet 86 in restricted areas only. Where the surface of the sheet is to be completely piled, a smooth roll to spread adhesive over the entire surface of the sheet is used.

As the adhesive coated sheet goes over roll 88, it may be sprayed with fibers from one or more spray electrodes 101 in accordance with the practice described in application Serial No. 5,288. The fibers for sprays 101 are supplied through conduit 102 and this can be made to move away from the entrance of sprays 101 by reciprocating means, for instance, crank 104 acting, preferably with a quick return movement, through connecting-rod 103, will make conduit 102 articulate at joint 105 at the chosen intervals when deposition of particles is to be interrupted. During the period of interruption the fibers blow out the end of conduit 102 and fall to the bottom of casing 100 to be lifted again by blower 101. If electrode 101 is maintained at high potential connecting tube 100 is made of insulating material.

Sheet 86 next passes through an electric field established between screen electrode 110 and control electrode 111. The latter electrode can be in the form of any of the control electrodes shown in application Serial No. 5,288, but is made into or is attached to an endless band. If electrode 111 is to cause the fibers to deposit in a closed pattern or one with transverse marks, it must move at the same speed and in the same direction, as sheet 86 while sheet 86 is moving through the electric field above electrode 110. This is accomplished by turning pulley 112, over which electrode 111 passes, by a positive drive 113 such as a chain from a source of power 114 which also turns pulley 90 over which sheet 86 passes, in positive manner. Positive synchronous movement of belt and electrode can also be obtained by having spurs project from the edge of electrode 111 and engage perforations along the edges of sheet 86 in the manner known to the moving picture art. A grounded shoe 115 contacts electrode 111 and maintains it at ground potential.

Underneath sheet 86 a belt 116 may be positioned by utilizing supporting pulley 117 and supporting and propelling pulley 118. Belt 116 may be perforated as a stencil and function as a field stencil in the manner of member 93 in Fig. 1. The stenciling belt must move at the same speed as sheet 86 and such movement is obtained through drive 119. Other field altering means, such as screens, can be used in place of stenciling means 116, and such means travelling at the speed of sheet 86 will give the pile on sheet 86 a woven appearance. Although pattern control electrode 111 and stenciling or other field altering means 116 can be used at the same time, ordinarily this is not done. A flat stationary electrode may be used in place of special electrode 111 when a field stencil is being used in front of sheet 86. Fibers are supplied to the field between electrodes 110 and 111 by supply means 120 in which air jets are utilized to project the fibers up through electrode 110.

Electrodes 124 and 126 in Fig. 4 are energized and used to deposit fibers if portions of the surface of sheet 86 remain unpiled after the sheet passes through the processing steps described in the above. No special effect is sought in this last step. Both electrodes have, in general, flat surfaces and the uniform field that results from impressing a high voltage across electrodes 124 and 126 tends to deposit an erect uniform pile. The deposition of fibers in this step is usually for the purpose of completing the pile started with spray electrodes 101 and/or the pile deposited through field stencil 116 and this filling is often made with fibers of a different color from that used in the preceding steps.

Apparatus for satisfactorily supplying fibers to the field between electrodes 124 and 126 is shown diagrammatically under electrode 124. It comprises an endless foraminous conveying belt 129 upon which fibers are spread by a distributor 130, preferably agitated, and a blowing means 127 that distributes air under pressure under belt 129 and causes it to pass up through the belt and raise the fibers therefrom and blow them through screen electrode 124. Unutilized fibers are collected in hopper 128 and conveyed by an air stream set in motion by fan 129 to filter bag collector 131 and thence to distributor 130.

Fig. 4 illustrates apparatus with a wide range of usefulness in the forming of artificial piles on adhesive covered surfaces. It is illustrative of the wide variation in methods and means for obtaining useful patterns in the electrical deposition of pile forming materials by the local alteration of the characteristics of the electrical field effecting the deposition, so as to produce a definite typical non-uniformity therein. It is obviously subject to a very large degree of variation and may be provided with electrode rapping or agitating means and other devices and modifications.

This application is a division of our application Serial No. 5,288, filed February 6, 1935, now Patent 2,152,077.

We claim:

1. Apparatus for electrically depositing attenuated fibers upon an adhesive coated surface to form a pile thereon in pattern form, comprising complementary electrode means for maintaining a high potential difference between said electrodes to establish an electric field therebetween whereby attenuated fibers introduced into said field are caused to be projected towards one of said electrodes, means positioned between the electrodes for causing local concentrations of the electric field between said electrodes, means for positioning an adhesive-surfaced base material in the non-uniform portion of said field, and means for supplying attenuated fibers to said field between said field concentrating means and the other electrode.

2. Apparatus for electrically depositing attenuated fibers upon an adhesive coated surface to form a pile thereon in pattern form, comprising complementary electrodes, means for maintaining a high potential difference between said electrodes to establish an electric field therebetween whereby attenuated fibers introduced into said field are caused to be projected towards one of said electrodes, a member positioned in the field between said electrodes having perforations extending therethrough in the direction of the lines of force of said field, means for passing an adhesive-surfaced base material through the electric field between said member and said electrode, and means for supplying attenuated fibers to said field between said member and the other electrode.

3. Apparatus for electrically depositing at-

tenuated fibers upon an adhesive coated surface to form a pile thereon in pattern form, comprising complementary electrodes, means for maintaining a high potential difference between said electrodes to establish an electric field therebetween whereby attenuated fibers introduced into said field are caused to be projected towards one of said electrodes, a member positioned in the field between said electrodes having perforations extending therethrough in the direction of the lines of force of said field, means for passing an adhesive-surfaced base material through the electric field between said member and said electrode, means for moving said member substantially synchronously with said base material, and means for supplying attenuated fibers to said field between said member and the other electrode.

4. Apparatus for electrically depositing fibers upon an adhesive coated surface to form a pile thereon in pattern form, comprising opposed complementary electrodes, means for impressing a high potential difference between said electrodes to establish an electric field therebetween whereby attenuated fibers introduced into said field are caused to be projected towards one of said electrodes, means for positioning an adhesive-surfaced base material in the electric field adjacent the electrode toward which the fibers are projected by the field, a member positioned in the field between said base material and the other of said electrodes having perforations extending therethrough in the direction of the lines of force of said field, and means for supplying attenuated fibers to said field between said member and said other electrode.

5. Apparatus for electrically depositing fibers upon an adhesive coated surface to form a pile thereon in pattern form, comprising opposed complementary electrodes at least one of which presents an extended substantially plane surface to the opposing electrode, means for impressing a high potential difference between said electrodes to establish an electric field therebetween whereby attenuated fibers introduced into said field are caused to be projected towards an extended surface electrode, means for positioning an adhesive-surfaced base material in the electric field adjacent the electrode toward which the fibers are projected by the field, a member extending through said field in substantially parallel relation to said extended surface electrode between said base material and the other of said electrodes having perforations extending therethrough in the direction of the lines of force of said field, and means for supplying attenuated fibers to said field between said member and said other electrode.

ARCHIBALD F. MERTON.
HARRY A. WINTERMUTE.

[fol. 702]

Oct. 8, 1940. A. F. MESTON ET AL 2,217,126

FILED SURFACE IN PATTERN FORM

Original Filed Feb. 6, 1935 4 Sheets-Sheet 1

Fig. 1.

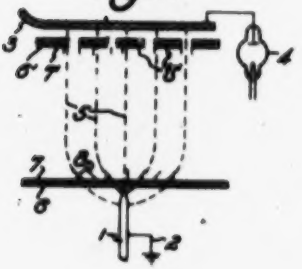

Fig. 2.

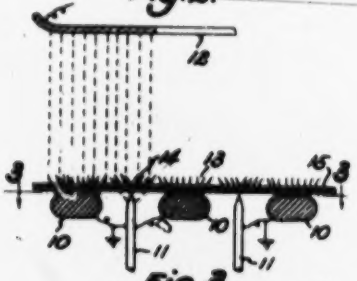

Fig. 3.

Fig. 4.

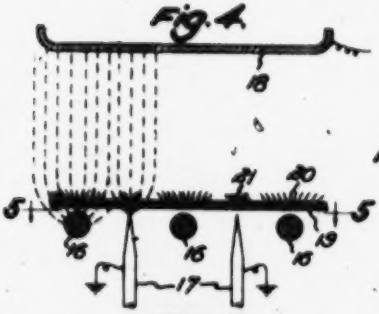

Fig. 5.

Fig. 6.

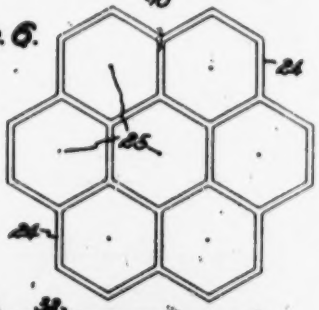

Fig. 7.

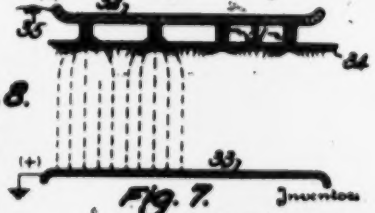

Fig. 8.

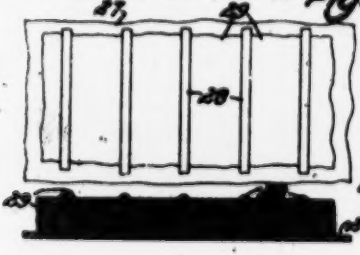

Fig. 9.

Inventors

Archibald F. Meston

Henry A. Wintermute

Potter, Prince & Schaffer

Attorneys

[fol. 703]

Oct. 8, 1940. A. F. MESTON ET AL 2,217,126

FILED SURFACE IN PATTERN FORM

Original Filed Feb. 6, 1936 6 Sheets-Sheet 2

Fig. 10.

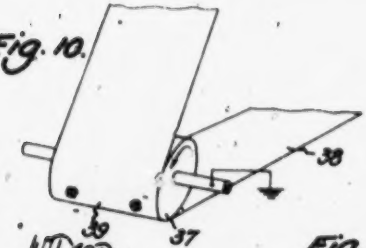

Fig. 11.

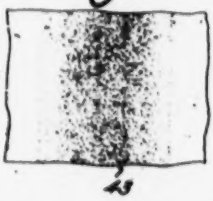

Fig. 12.

Fig. 13.

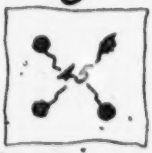

Fig. 14.

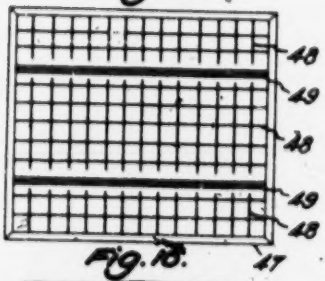

Fig. 15.

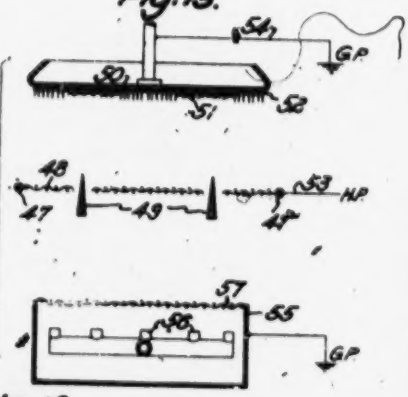

Fig. 16.

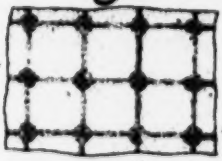

Fig. 17.

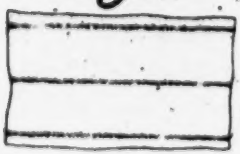

Fig. 18.

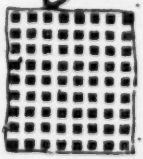

Inventors
Archibald F. Meston
Harry A. Winternute
By Potter, Pierce & Scheffler
Attorneys

[fol. 704]

Oct. 8, 1940. A. F. MESTON ET AL 2,217,126

FILED SURFACE IN PATTERN FORM

Original Filed Feb. 6, 1936 4 Sheets-Sheet 3

Fig. 19.

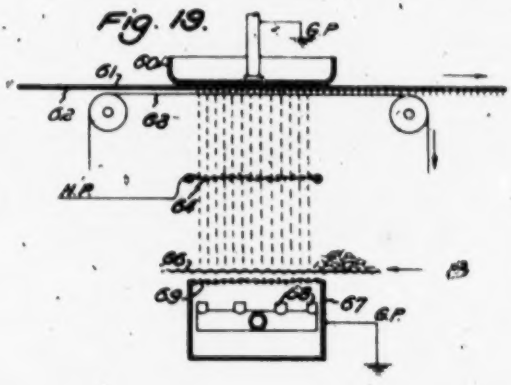

Fig. 20.

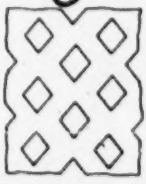

Fig. 21.

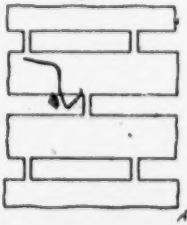

Fig. 23.

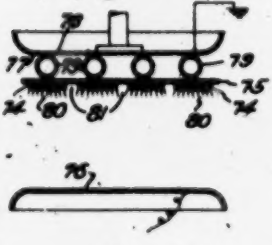

Fig. 22.

Inventors:
Archibald F. Meston
Harry A. Wintermute
By Potter, Pierce & Scheffler
Attorneys

[fol. 705]

Oct. 8, 1940. A. F. MESTON ET AL 2,217,126

FILED SURFACE IN PATTERN FORM

Original Filed Feb. 6, 1936 4 Sheets-Sheet 4.

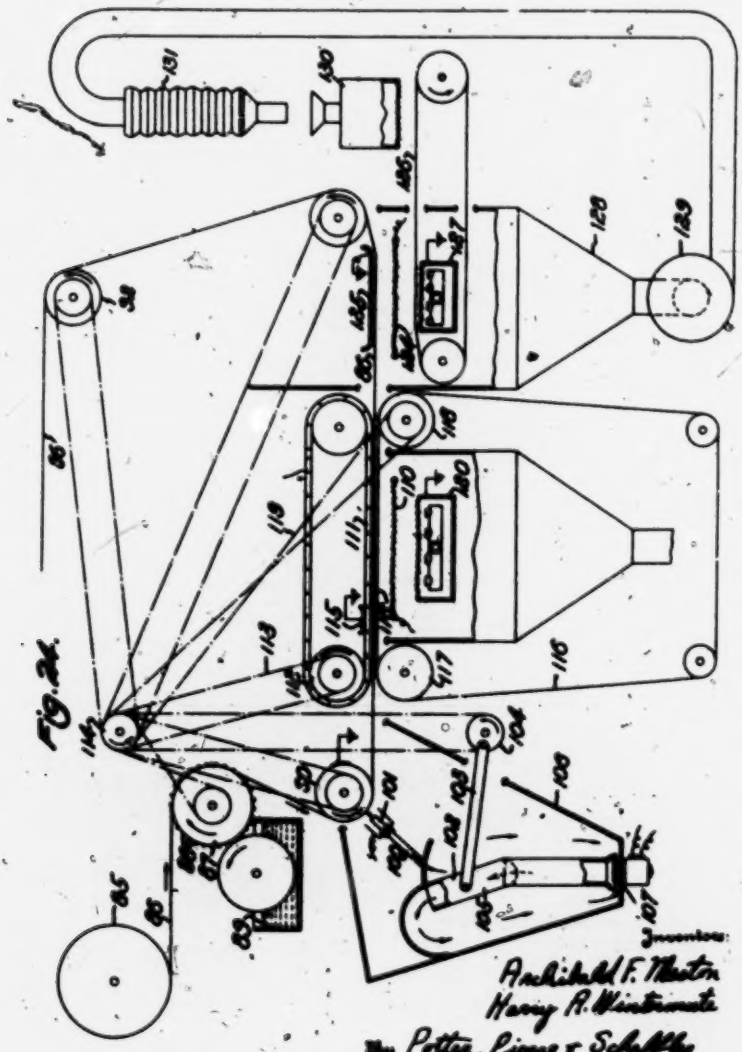

Fig. 24.

Inventors:
Archibald F. Meston
Harry R. Wintermute
By Potter, Pierce & Schaffner
Attorneys

Patented Oct. 8, 1940 2,217,126

UNITED STATES PATENT OFFICE

2,217,126

PILED SURFACE IN PATTERN FORM

Archibald F. Meston, Bound Brook, and Harry A. Wintermute, Plainfield, N. J., assignors, by mesne assignments, to Bohr-Manning Corporation, a corporation of Massachusetts

Original application February 6, 1935, Serial No. 5,366. Divided and this application March 20, 1937, Serial No. 132,169

3 Claims. (Cl. 41—36)

This invention relates to coating and decorating surfaces with simulated piles in pattern form and is particularly directed to the novel pile surfaced material thereby produced.

Fibers, such as rayon flocks, can be deposited in oriented position upon an adhesive covered surface if the surface is positioned in an electric field and fibers are introduced into the electric field in unrestrained manner. The conditions required for satisfactory deposition of fibers in the piling of surfaces are described in expending applications Serial No. 692,201, A. F. Meston, filed October 4, 1933, and Serial No. 699,456, H. A. Wintermute, filed November 23, 1933.

The piles made with the apparatus and methods used and described in the applications just mentioned are quite uniform in composition and appearance. Most of the fibers stand erect, perpendicular to the surface, making piles of monotonous evenness from a decorative standpoint. It has now been found that by suitable control of the electric field by means of which the fibers are deposited, and particularly by the use of a deliberately warped or discontinuous electric field, pleasing variations and definite patterns can be obtained in the pile.

A principal purpose of the invention is the production of pile surfaced material comprising a foundation web having a binder in its surface and fibers attached to the web by the binder which vary topically in concentration or inclination or both to form a pattern.

Apparatus useful in carrying out the invention and several embodiments of the invention, including novel methods and products, are hereinafter described with particular reference to the appended drawings, in which:

Fig. 1 is a diagrammatic side view of complementary electrodes and an electric field therebetween in which fibers are being attached by the forces prevailing in a non-uniform portion of the field;

Fig. 2 is a fragmentary view in side elevation of an assembly of electrode elements as used in the deposition of fibers in accordance with the invention;

Fig. 3 is a fragmentary plan view of what is shown in Fig. 2 taken at 3—3;

Figs. 4 and 5 are fragmentary views comparable to Figs. 2 and 3, respectively, showing the utilization of somewhat different elements in the electrode structure used with the invention;

Fig. 6 is a plan view of another arrangement of electrode elements useful in setting up a non-uniform field in accordance with the invention;

Fig. 7 illustrates in side view the forming of a patterned pile on a base sheet, with still another arrangement of electrodes;

Figs. 8 and 9 are fragmentary plan and side views, respectively, of another electrode assembly that can be used advantageously with the invention;

Fig. 10 indicates, perspectively, apparatus including air jets useful in applying fibers to surfaces in accordance with the invention;

Figs. 11, 12 and 13 show with plan views, the types of patterns which can be obtained with the apparatus illustrated in Fig. 10;

Fig. 14 is a plan view of a foraminous electrode comprising corona forming elements, useful in practicing the invention;

Fig. 15 shows diagrammatically in end elevation, apparatus for utilizing the electrode shown in Fig. 14;

Figs. 16, 17 and 18 are views of fragmentary portions of products made with reticulated electrodes;

Fig. 19 shows diagrammatically, in side elevation, apparatus for depositing fibers in pattern formation, by utilizing a moving field-stencil;

Figs. 20 and 21 show typical forms of field stencils used with the invention;

Fig. 22 illustrates, in side view, an adhesive applying roll with cut-away portions;

Fig. 23 shows, in sectional elevation, an electrode assembly useful in depositing fibers on a surface coated with the roll shown in Fig. 22; and

Fig. 24 is a diagrammatic view in side elevation of apparatus that permits the utilization of the various electrodes and other means illustrated in the various figures and the carrying out of the several methods of the invention to be hereinafter described.

In Fig. 1, numerals 1 and 3 identify electrodes between which an electric field has been established; electrode 1 is grounded as indicated at 2 and electrode 3 is insulated from ground and connected to a source of high potential constant polarity current represented by tube rectifier 4. The so-called lines of force of the electric field represented by lines 5 leave the electrodes perpendicular to the surface. Electrode 1 has a pointed or rounded top and the lines of force curve and spread out in the manner shown as they leave the small area presented by the top of the electrode. Opposing or complementary electrode 3, on the other hand, has a flat surface upon which the lines of force terminate and the

lines of force in the vicinity of this electrode are straight, parallel, and uniformly distributed.

When a non-conducting sheet 6 covered with adhesive 7 is positioned between electrodes 1 and 3 and short fibers are freely suspended in the electric field the fibers are oriented and attached to the adhesive covered sheet parallel to the lines of force passing through the sheet at the point of attachment. Once attached they maintain the position of original attachment and resist re-alinement by forces that may be applied subsequently. When the sheet to be piled with fibers is placed in the position marked 5', the fibers are attached in the positions 8', 9' and a uniform pile of upright fibers is obtained. But if a sheet is held against, or a short distance from, electrode 1, the fibers are attached at angles to the perpendicular as indicated at 8, 9 because of the inclined positions of the lines of force 5 in this region of the electric field. For instance, the field near a point causes the fibers to become arranged like the petals of a flower.

In Figs. 2 and 3, the electrode elements over which the adhesive covered sheet 16 is positioned while being piled comprises members 10 with a more or less extended top surface and members 11 with very restricted or ...ped top surfaces. The complementary electrode 12 is preferably flat or has an extended surface. The arrangement of the fibers in the pile made with the electric field between electrode elements 10 and 11 and electrode 12 is shown in Fig. 2. The fibers 13 over the extended positions 10 are deposited in erect position except perhaps over the edges of elements 10, while the fibers 14 over edges 11 are deposited in the inclined positions shown and provide a striped effect. This pattern can be made while the sheet is moving in the direction of the arrow in Fig. 2, but if it is desired to have the stripes extend crosswise of the sheet, the electrode elements 10 and 11 must move at the same speed as the sheet.

In Figs. 4 and 5 the electrode assembly which influences the deposition of the fibers is made up of bars 16 and pointed members 17. Complementary electrode 18 has a flat extended surface. The pile formed with these electrode elements, assembled as shown, comprises parallel stripes with spots between them, the stripes being formed of fibers 20 deposited over rods 16 perpendicular to sheet 19 except at the edges and the spots being formed of fibers 21 which are deposited over points 17 in inclined positions. The smaller the diameter of rods 16 and the closer these are to the sheet 19 being piled, the more the fibers at the edges of the stripes lean outward and set off the stripes, and the closer points 17 are to sheet 19 the more pronounced is the inclination of the fibers in points 21.

By varying the relative positions of the electrode elements in Figs. 4 and 5 the pattern formed will present various effects. The electrical connections can be varied also. It will be noted that while elements 10 in Fig. 2 are grounded, elements 16 in Fig. 4 are not connected to ground, but are allowed to electrically "float" on insulating supports (not shown) and to take the voltage resulting from their position in the electric field. If the sheet being piled is held stationary during the deposition of the fibers the pattern will comprise stripes with dots between, but if the sheet is moved during deposition the electrode elements, at least points 17, must move at the same speed as the sheet or streaks will result in the pattern over the points.

Fig. 6 is a plan view of an assembly of electrode elements not unlike the assembly shown in Fig. 5, but in Fig. 6 the bars (similar to those marked 16 in Fig. 5) making up member 24 have been joined together to form a single continuous element. Points 25, one of which is positioned in the center of each individual hexagon, have been found to alter the electric field in such manner that the pile deposited t... comprises hexagon figures of unusual interes... The fibers are inclined at various angles and when looking at the pile from first one and then another position the sheen changes, displaying many fragments of hexagons, some lustrous and some of which are dull. Of course, to provide a closed pattern like the one made with the electrode of Fig. 6, the electrode must participate in any movement undergone by the surface being piled, as will be described, for example, in connection with Fig. 24.

In Fig. 7, elements 31 are strips of insulating material, for instance, of hard rubber or phenol condensation products, attached to a conducting plate 32. Dielectric material with a specific inductive capacity several times that of air, examples of which are porcelain, mica or "Bakelite," when placed in an electric field, will locally concentrate the lines of force in the field in the vicinity of the pieces of dielectric. The arrangement shown in Fig. 7 has conducting plate 32 connected through conductor 36 to a source of unidirectional current at a potential of, say, 70,000 volts above ground. Complementary electrode 33 is positioned some 4 inches below member 32 and is maintained at ground potential. Elements 31 are, therefore, positioned in the strong electric field that exists between electrodes 32 and 33 and tend to concentrate the lines of force as they approach electrode 32.

Now if an adhesive covered surface, as sheet 34, that is not conducting, is placed just in front of elements 31 and fibers are suspended in the electric field above electrode 33, or distributed over the surface of electrode 33, many of the fibers will be raised and oriented by the electrical field and attracted to electrode 32. The fibers will move with their long axis parallel to the electric lines of force and become attached to the adhesive covered under surface of sheet 34 in the inclined positions shown. In this embodiment of the invention the electric field is warped by placing insulating members of sharp curvature or limited area before a conducting member, preferably a simple member of extended area, whereas in the apparatus illustrated in Figs. 1, 2, 4 and 6, warped fields are established by providing conducting elements of sharp curvature and limited area. The insulating strips 31 in Fig. 7 can be formed into geometrical figures, letters and the like, thus permitting a wide variety in the patterns formed.

Figs. 8 and 9 illustrate another electrode structure comprising insulating material used with certain embodiments of the invention. It is made up of a conducting base plate 27, conducting elements 28, here shown as narrow strips with rounded tops, and dielectric material 29 between the strips. Electrodes of this construction give very striking results. The sheet to be piled is placed parallel to the top surface of material 29 and touching or closely adjacent the top (exposed) edges of members 28 and a complementary electrode is positioned at a proper distance —2 to 5 inches, depending upon conditions— above 29 as electrode 12 is positioned above mem-

[fol. 708]

bers 16 in Fig. 2. The pile deposited when a strong electric field is established between the electrodes shows very pleasing shaded stripes, probably due to peculiar distortions in the electric field produced at top of elements 28 where they emerge from insulating material 29. The arrangement of the conductive members with relation to the insulating material has been found to have a considerable effect on the patterns produced. With the electrode shown in Figs. 8 and 9, very good patterns have been obtained with conducting edges 28 projecting about 1/8 to 1/4 inch above the surface of dielectric filler 29.

In those embodiments of the invention shown in Figs. 1 to 9, inclusive, the controlling electrode, that is the electrode influencing the pattern in the pile most greatly, is placed just back of the sheet or other member, the surface of which is to be piled. The adhesive coating is placed on the side of the sheet away from the controlling electrode and faces the complementary electrode which furnishes a surface upon which the other end of the electric field terminates. For example, in Fig. 4, elements 16 and 17 comprise the controlling electrode, member 16 is the complementary electrode, and 19 is the sheet being piled with the adhesive coating on the side of the sheet away from electrode 16, 17. Figs. 6, 8 and 9 show no complementary electrodes, but it is to be understood that in using the controlling electrodes shown in these figures, suitable opposing or complementary electrodes are also used. The electrodes can be positioned so that the fibers move downward to become attached to the coated surface, as in Fig. 2, or the electrodes can be arranged to cause the fibers to move upward as in Fig. 7. The latter arrangement, or an arrangement with vertically positioned surfaces, is advantageous because such arrangements make easy the jarring of loose and poorly attached fibers from the sheet during the piling operation.

The electrode farthest from the sheet is not of such contour, usually, that it influences the pattern in the pile and is often made as a simple, flat, non-discharging surface. But as will be explained hereinafter, the electrodes away from the sheet to be piled can greatly influence the deposition of the fibers comprising the pile.

The sheet to be piled in Fig. 10 is positioned adjacent an electrode of smooth contour, in this instance, a roll 37 and corona-forming, complementary electrodes 40 are responsible for the pattern effect in the pile. It has been found that if the fibers to be electrically deposited are introduced through a tube about which corona discharges are present, desirable results in patterned piles can be obtained. In Fig. 10, sheet 38 travels about a grounded roll 37 which preferably turns to avoid friction and exposes an adhesive covered surface 39 to electrodes 40, each made up of a tube 41 and discharge points 42. It has been found that if wire points 43 are left off when rayon flocks or similar fibers are blown through tubes 41 and the tubes are connected to a source of unidirectional high potential current, the flocks become scattered as they are deposited. Such a result is shown at 43 in Fig. 11. With points 42 attached to and arranged about high potential tubes 41, the flocks are concentrated locally as illustrated in Figs. 12 and 13. If sheet 38 moves while electrodes 40 are stationary, but continuously depositing fibers, stripes 44 are formed. If the fibers are deposited only while sheet 38 is stationary, or while it is moving at the same speed as electrodes 40 are caused to move, spots are formed such as those marked 45 in Fig. 13. Other factors controlling the pattern produced are the size of the tubes or nozzles, the velocity of the air stream, the emphasis given the corona emanating from the points as caused by variously positioning the points about the end of the tube, and the strength of the electric field.

The stripes or points deposited with the electrode assembly in Fig. 10 may be insufficient in themselves to form a pleasing pattern. Advantageously all of surface 39 is covered with adhesive, then spots are first deposited in one color in the manner just described, and then the sheet is moved into another part of the apparatus shown in Fig. 24 where the unpiled surface is covered with fibers of a different color. Not only can the fibers successively deposited be of different colors, but they can be of different length and/or luster, and by controlling the characteristics of the electric field and the length of treatment the spots or stripes can be made to have a very different appearance from the pile filled in between. The furs of certain animals, the silver fox, for instance, can be imitated by using the method just described.

It has been found desirable in the electrical attachment of fibers to form a pile to have the fibers approach the surface to be piled separately, not in clumps or "treed" together. Screens may be used to break up grouped fibers as they are floated in air streams into the electric field and a simple manner of using a screen or other foraminous member for this purpose is to have it function as one of the electrodes. Figs. 14 and 15 show an electrode 47 that functions as a complementary electrode to grounded electrode 38. Electrode 47 of conducting material is insulated from ground and positioned about four inches below electrode 38 and is connected by conductor 53 to a source of unidirectional high potential current. It functions also to break up clumps of fibers blown by air jets 56 from supply means 55 that are not completely disintegrated by disintegrating means 57. It has been discovered that a foraminous electrode, positioned and used as is electrode 47 in Figs. 15, can be caused to influence the arrangement of fibers as they are electrically deposited on a surface,—on the surface of sheet 52, for example, as it is held adjacent 38. One way of altering the pile formed of the deposited fibers is to make foraminous electrode 47 with edges 48 projecting through surface 48 which is preferably of screen. The electric field adjacent edges 48 is so concentrated when a high voltage drop is impressed across electrodes 47 and 38 that corona discharges emanate from the edges and the fibers just over the edges deposit in other than erect positions as indicated at 51. Depressed stripe effects are given the pile formed with electrodes 47 and 38. Of course, points or edges arranged in patterns could be substituted for edge members 48 in electrode 47.

Figs. 16, 17 and 18 are plan views of fragments of patterned piles which may be made with the controlling electrodes spaced from the surface being piled. The pattern shown in Fig. 16 is made with an electrode of wire net of coarse mesh (1/2 to 3/4") located in the position of electrode 47 in Fig. 15. A very strong electric field is used to deposit the fibers, but not strong enough to force the fibers down into the adhesive, such as results from quite definite corona discharges. The pile in Fig. 17 results from the use of an electrode comprised of parallel wires and that shown in Fig. 18 may be made with a net of

rather small mesh used as a controlling electrode and positioned several inches from the adhesive covered surface being piled. The piles shown in Figs. 16, 17 and 18 are characterized by having lines and/or dots standing out prominently as local concentrations of fibers.

Fig. 19 illustrates apparatus in which the field controlling member is supported in front of the surface being piled, but is preferably at the same or nearly the same potential as the electrode just back of the sheet with the surface being piled. Electrode 66 is preferably flat and is at ground potential. Electrode 64 is of reticulated construction or the like and is maintained at high potential. Sheet 61, the under side 62 of which is to be piled, is moved through the electric field between electrodes 66 and 64, preferably just under and touching electrode 66, as shown. A member 63, advantageously formed as a belt with stencil-like perforations such as the diamond design shown in Fig. 20 or the slots shown in Fig. 21, is moved parallel with and at the same speed as sheet 61. It is held a short distance, for example one-fourth inch, in front of adhesive covered surface 62. The fibers to be deposited are brought into the apparatus on a moving porous belt 68. When the fibers are carried by belt 68 over the top of wind box 67, compressed air issuing from nozzle 69 and passing through regulating means 69 blows through the interstices of belt 68 and blows the fibers up through electrode 64 and into the electric field for deposition on surface 62. Very definite patterns are made with the apparatus shown in Fig. 19 and they can be made very colorful if the sheet to be piled is passed through several partially shielded fields, each one depositing fibers of a different color.

Belt 63 can be made of wire or other attenuated members woven into a pattern and it will influence the deposition of the fibers comprising the pile by altering the electric field. The resulting patterns will be much like those shown in Figs. 16 and 17, but in more striking relief. Or belt 63 can be made up as a stencil and cause a pattern to be made by definitely covering portions of surface 62 and permitting flocks to be deposited only behind openings in the stencil. Besides the diamond pattern shown in Fig. 20, decorative designs, such as flowers, and commercial outlines, comprising names, can be formed. Such stencil-like members effect the pattern not only mechanically but also effect it by locally altering the characteristics and intensity of the electric field and therefore they may be designated as "field stencils."

Figs. 22 and 23 illustrate apparatus adapted to apply adhesive locally to a surface and then to pile the adhesive covered portions in accordance with the invention. In Fig. 22, adhesive applying roll 71 has cut away portions 72 and raised portions 73. Only the raised portions carry adhesive to the surface to be piled and in the figure a transverse cross-section of a sheet 76 is shown with stripe of adhesive 74 applied thereto by raised portions 73. Fig. 23 shows sheet 76 after having been locally coated with adhesive with roll 71 passing through a strong electric field between complementary electrodes 76 and 77. Electrode 77 comprises a conducting plate 78 on the bottom surface of which tubes 79, or other members of small surface area which may be but are not necessarily conducting, are attached. Tubes 79 are spaced to correspond with the spacing of raised portions 73 on applicating roll 71. Sheet 76 is positioned under and adjacent tubes 79 and, for continuous operation, is moved in a direction parallel to the tubes. The pile 80 deposited on adhesive stripe 74, by action of the electric field in the manner previously described, is not uniformly erect, but leans outwardly at the edges and projects into unpiled spaces 81. The inclined positions of some of the fibers is due to the directions taken by the lines of force of the electric field approaching the surfaces of tubes 79. The effect of the inclined fibers partially covering spaces 81 is especially striking when the fibers are of one color and sheet 76 is of another color.

Fig. 24 is a diagrammatic view in side elevation of apparatus which may be used in successively applying the several embodiments of the invention which have been described. A sheet 86 of the material to be piled, for example, a light weight, flexible but closely woven textile, is unwound from supply roll 83, passed over an adhesive applying roll 87, over positioning and tensioning rolls 88, 81 and 82, and through means, not shown, for finishing and storing the piled product. Roll 87 is shown with raised portions 88 to apply the adhesive from vessel 89 to the surface of sheet 86 in restricted areas only as in that embodiment of the invention illustrated by Figs. 22 and 23. Where the surface of the sheet is to be completely piled, a smooth roll to spread adhesive over the entire surface of the sheet is used.

As the adhesive coated sheet goes over roll 88, it may be sprayed with fibers from one or more spray electrodes 101 in accordance with the practice described in connection with Figs. 10, 11, 12 and 13. If the spray electrodes 101 are operated continuously, lines of fibers are deposited upon sheet 86 as shown in Fig. 13, but if the spraying is done at intervals only, spaced patches such as the spots shown in Fig. 13 will be deposited. The fibers for sprays 101 are supplied through conduit 102 and this can be made to move away from the entrands of sprays 101 by reciprocating means, for instance, crank 104 acting, preferably with a quick return movement, through connecting rod 105 will make conduit 102 articulate at joint 103 at the chosen intervals when deposition of particles is to be interrupted. During the period of interruption the fibers blow out the end of conduit 102 and fall to the bottom of casing 100 to be lifted again by blower 107. If electrode 101 is maintained at high potential connecting tube 106 is made of insulating material.

Sheet 86 next passes through an electric field established between spray electrode 110 and control electrode 111. The latter electrode can be in the form of any of the control electrodes shown in Figs. 1 to 9 inclusive, but is made into or is attached to an endless band. If electrode 111 is to cause the fibers to deposit in a closed pattern or one with transverse marks, it must move at the same speed and in the same direction as sheet 86 while sheet 86 is moving through the electric field above electrode 110. This is accomplished by turning pulley 112, over which electrode 111 passes, by a positive drive 113 such as a chain from a source of power 114 which also turns pulley 85 over which sheet 86 passes, in positive manner. Positive synchronous movement of belt and electrode can also be obtained by having spurs project from the edge of electrode 111 and engage perforations along the edges of sheet 86 in the manner known to the moving picture art. A grounded shoe 115 con-

tacts electrode 111 and maintains it at ground potential.

Underneath sheet 86 a belt 116 may be positioned by utilizing supporting pulley 117 and supporting and propelling pulley 118. Belt 116 may be perforated as a stencil and function as a field stencil in the manner of member 63 in Fig. 19. The stencilling belt must move at the same speed as sheet 86 and such movement is obtained through drive 119. Other field altering means, such as screens, can be used in place of stencilling means 116, and such means travelling at the speed of sheet 86 will give the pile on sheet 86 a woven appearance as indicated in Figs. 16 and 18. Although pattern control electrode 111 and stencilling or other field altering means 116 can be used at the same time, ordinarily this is not done. A flat stationary electrode may be used in place of special electrode 111 when a field stencil is being used in front of sheet 86. Fibers are supplied to the field between electrodes 110 and 111 by supply means 120 in which air jets are utilized to project the fibers up through electrode 110.

Electrodes 124 and 125 in Fig. 24 are energized and used to deposit fibers if portions of the surface of sheet 86 remain unpiled after the sheet passes through the processing steps described in the above. No special effect is sought in this last step. Both electrodes have, in general, flat surfaces and the uniform field that results from impressing a high voltage across electrodes 124 and 125 tends to deposit an erect uniform pile. The deposition of fibers in this step is usually for the purpose of completing the pile started with spray electrodes 101 and/or the pile deposited through field stencil 116 and this filling is often made with fibers of a different color from that used in the preceding steps.

Apparatus for satisfactorily supplying fibers to the field between electrodes 124 and 125 is shown diagrammatically under electrode 124. It comprises an endless foraminous conveying belt 126 upon which fibers are spread by a distributor 130, preferably agitated, and a blowing means 127 that distributes air under pressure under belt 126 and causes it to pass up through the belt and raise the fibers therefrom and blow them through screen electrode 124. Undeposited fibers are collected in hopper 128 and conveyed by an air stream set in motion by fan 129 to filter bag collector 131 and thence to distributor 130.

Fig. 24 illustrates apparatus with a wide range of usefulness in the forming of simulated piles on adhesive covered surfaces. It is illustrative of the wide variation in methods and means for obtaining useful patterns in the electrical deposition of pile forming materials by the local alteration of the characteristics of the electrical field effecting the deposition, so as to produce a definite topical non-uniformity therein. It is obviously subject to a very large degree of variation and may be provided with electrode rapping or agitating means and other devices and modifications.

This application is a division of our application Serial No. 5,288, filed February 6, 1935.

We claim:

1. A patterned pile-surfaced material comprising a base material, a continuous layer of binder material thereon and a substantially continuous coating of fibers having one end embedded in said binder material and the fibers in adjacent areas of said coating having different angles of inclination whereby a design of predetermined pattern is formed by the varying reflection of light.

2. A patterned pile-surfaced material comprising a base material, a continuous layer of binder material thereon and a substantially continuous coating of fibers having one end embedded in said binder material and the fibers in said coating locally varying in angle of inclination whereby a design of predetermined pattern is formed by the varying reflection of light.

3. A pile surface material comprising a continuous layer of binder material having fibers embedded therein at one end thereof, said fibers being disposed at locally varying angles of inclination to form a design of predetermined pattern by the varying reflection of light.

ARCHIBALD F. MESTON.
HARRY A. WINTERMUTE.

[fol. 711]

Oct. 15, 1940. H. A. WINTERMUTE 2,218,445

PRODUCTION OF FILE SURFACE MATERIALS

Filed Sept. 24, 1936 2 Sheets-Sheet 1

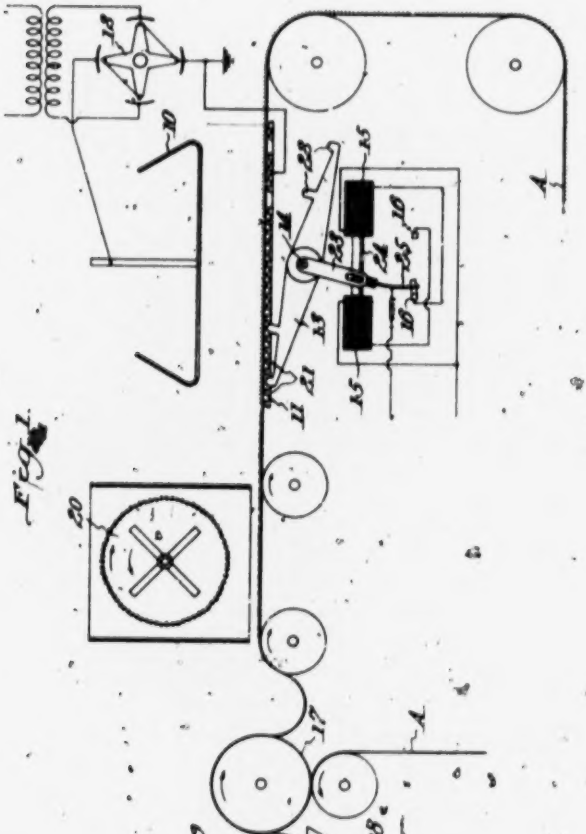

Fig. 1.

Inventor:
Harry A. Wintermute
By Potter, Pierce & Scheffler
Attorneys

[fol. 712]

Oct. 15, 1940. H. A. WINTERMUTE 2,218,445

PRODUCTION OF PILE SURFACE MATERIALS

Filed Sept. 24, 1936 2 Sheets-Sheet 2

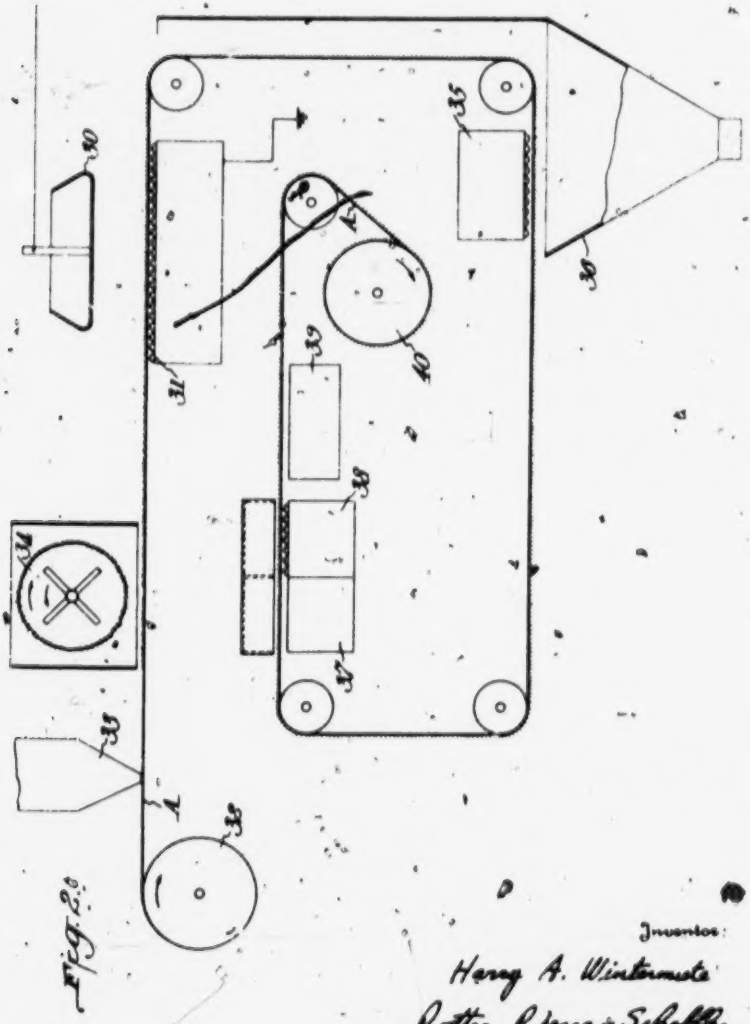

Fig. 2.

Inventor:
Harry A. Wintermute
By Potter, Pierce & Schaffer
Attorneys

[fol. 713]

Patented Oct. 15, 1940

2,218,445

UNITED STATES PATENT OFFICE

2,218,445

PRODUCTION OF PILE SURFACE MATERIALS

Harry A. Wintermute, Plainfield, N. J., assignor, by mesne assignments, to Raybestos-Manhattan Corporation, a corporation of Massachusetts

Application September 24, 1938, Serial No. 231,326

2 Claims. (Cl. 91—70)

This invention relates to the production of pile-surfaced material and is particularly directed to a process and apparatus for the utilization of the combined effects of electrical and mechanical forces to produce artificially piled surfaces having a high degree of uniformity of appearance and an enhanced durability.

In the production of pile-surfaced materials by the deposition of pile-forming material, such as rayon flock, for example, upon adhesive coated bases, it has been found very difficult to obtain piles having a satisfactory uniformity of appearance and a satisfactory durability. Uniformity of appearance requires that the pile-forming material be uniformly distributed and also positioned at uniform angles. It has also been difficult to obtain artificial products having satisfactory resistance to wear.

It has now been found that pile-surfaced products of highly satisfactory durability and uniformity may be obtained by the method of the invention which comprises depositing pile-forming material upon an adhesive-surfaced backing, and subjecting the deposited pile material, before the adhesive is fully hardened, to a shaking or vibratory action while bringing within the orienting influence of a strong electric field, either alternating or unidirectional.

This method makes possible the production of a thicker pile than can be obtained by mechanical methods alone, while for a given thickness of pile the adherence of the fibers is greatly increased and the time required for the production of the pile is substantially shortened. The fibers stand more nearly normal to the surface, are more uniformly distributed, and are more uniformly oriented than when mechanical forces alone are used. The method of the invention is far less sensitive to air conditions, such as temperature and humidity, than methods involving the use of electric fields alone for depositing and orienting the fibers. Moreover, the fibers are more firmly fixed in the adhesive surface by the method of the invention than by the use of either the electric field or mechanical forces alone.

Various modifications of the method have been found to be advantageous for certain purposes. For example, a more durable bonding of the fibers may be obtained by subjecting the piled material to a subsequent conditioning whereby the adhesive is somewhat softened, for example, by heating. The further treatment may also advantageously include subjecting the material while in the conditioned state to mechanical vibration. The conditioning of the material by softening the adhesive after the depositing of the fibers, causes the fibers to be more firmly gripped by the adhesive and this effect is furthered by a concomitant vibration.

The method and apparatus of the invention will be more particularly described with reference to the illustrative embodiments shown in the accompanying drawings in which

Fig. 1 illustrates one form of method and apparatus embodying the principles of the invention; and

Fig. 2 represents a modified form of the invention.

In Fig. 1, 10 represents a high potential electrode and 11 a grounded electrode. The electrodes are supplied with unidirectional high potential current by means of mechanical rectifier 12. Electrode 11 comprises a plurality of fixed bars 21, preferably curved on their upper sides, and a number of movable striking bars 22 carried on rocker arm 13. Arm 13 is rocked about pivot 14 by means of lever arm 23 and armature 24 of electromagnets 15 which are energized in alternation by means of reversing switches 16 operated by extension 25 on lever arm 23.

A web A, for example, of fabric material, is passed over roller 17, where it is coated with adhesive from container 18 by means of dip roll 19. Suitable fibrous material, such as rayon flock, is shown in predetermined amount on the adhesive-coated surface of the web by means of the rotating sifter 20. The web carrying the fibers on its adhesive-coated surface is then passed between electrodes 10 and 11, although lower electrode 11 where it is subjected to the combined effects of the strong electrical field between the electrodes and the vibration of rapper 13. The combined action of the electrical and mechanical forces causes the flock to be vertical endwise into the adhesive. The electrical field tends to orient the fibers in a direction perpendicular to the field and at the same time cooperates with the vibration in tending to force the flock further into the adhesive, while the vibration tends to make the fibers more responsive to the orienting effect of the electrical field.

In Fig. 2, 30 is a high potential electrode corresponding, as shown in connection with electrode 10 in Fig. 1, while 31 is a grounded electrode provided with vibrator mechanism, for example, of the type shown in connection with electrode 11 in Fig. 1.

Web A is led from roll 32 under center 33 which provides a coating of adhesive on the upper surface of the web, and then under sifter 34 as

[fol. 714]

which sprinkles a desired quantity of flock on the web. The web then passes between electrodes 30 and 31, where it is subjected to the combined effects of a high potential electrical field and mechanical vibration as in Fig. 1.

The pile-surfaced web is then passed under a vibrator 36 which may be of the same type as shown in connection with electrode 11 in Fig. 1, where excess fiber is shaken off and falls into hopper 38. The web is then led into heater 37 wherein the adhesive is softened. While the adhesive is in the softened condition it is subjected to further vibration by vibrator 36 in order to more firmly position the fibers in the adhesive. The web is then subjected to conditions for finally indurating the adhesive, for example, by means of drier 39, and the finished material is rolled up on roll 40.

The adhesive used in the practice of the invention should be sufficiently viscous to avoid a tendency to pull off or string in the electrical field, and also to prevent the fibers laid thereon from penetrating too far into the adhesive prior to passage into the electrical field. The adhesive may well be more viscous than when electrical forces alone are used for the deposition as the combination of mechanical and electrical forces will force the fibers into a more viscous adhesive.

The method and apparatus of the invention are particularly valuable for the deposition of fibers of short length and for operating under conditions such that the fibers have very low conductivity. The method is very flexible as to conditions of operation, type and size of fiber, character of adhesive, nature of base material and the like and permits of a wide variation in these and other factors.

I claim:

1. A method of making pile surfaces comprising forming a mat of pile-forming fibers on an adhesive-coated surface and then subjecting the surface and the pile-forming fibers to the conjoint action of a strong electrical field and mechanical vibration and thereafter softening the adhesive temporarily and subjecting the material to mechanical vibration while the adhesive is in softened condition.

2. In the production of pile-surfaced materials by the deposition of pile-forming fibers upon an adhesive-coated surface, the improvement which comprises subjecting the adhesive having pile-forming fibers imbedded therein to softening conditions and mechanically vibrating the material while the adhesive is in softened condition.

HARRY A. WINTERMUTE.

[fol. 715]

Nov. 19, 1940. A. F. MESTON 2,222,539

METHOD OF AND APPARATUS FOR MAKING PILE SURFACED SHEETS

Filed Dec 11, 1934 2 Sheets-Sheet 1

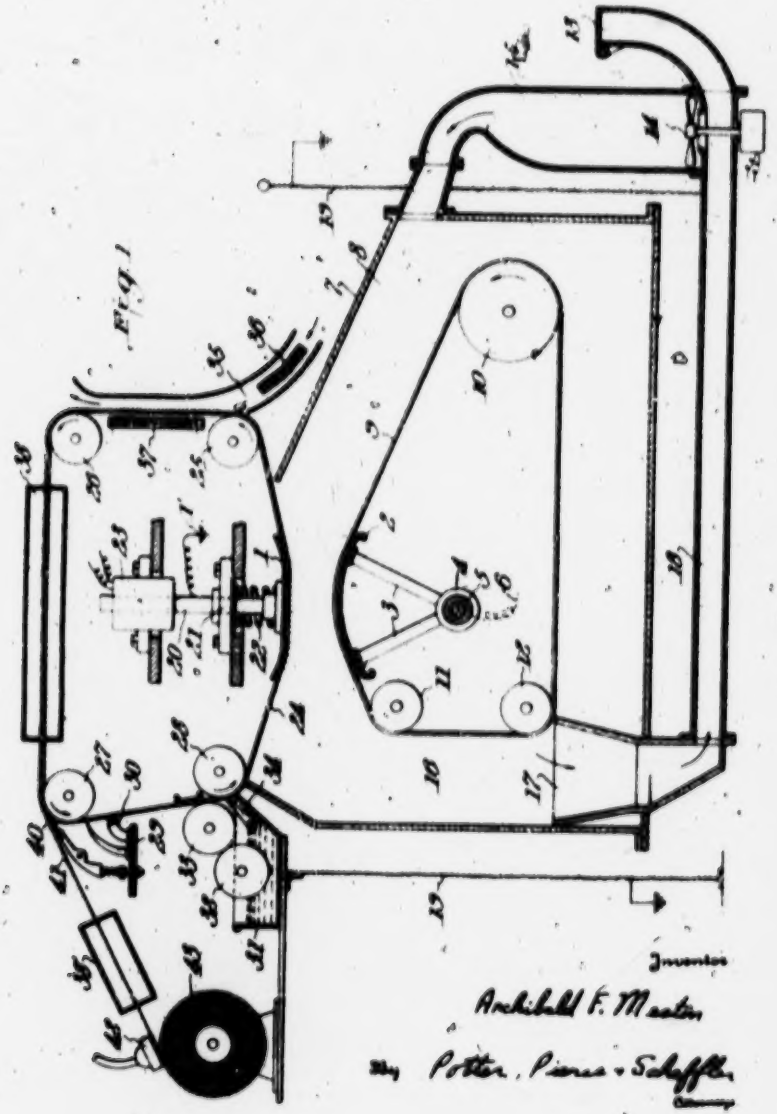

Fig. 1

Inventor
Archibald F. Meston
By Potter, Pierce & Schaffer
Attorneys

[fol. 716]

Nov. 19, 1940. A. F. MESTON 2,222,539

METHOD OF AND APPARATUS FOR MAKING PILE SURFACED SHEETS

Filed Dec. 11, 1934 2 Sheets-Sheet 1

Fig. 2.

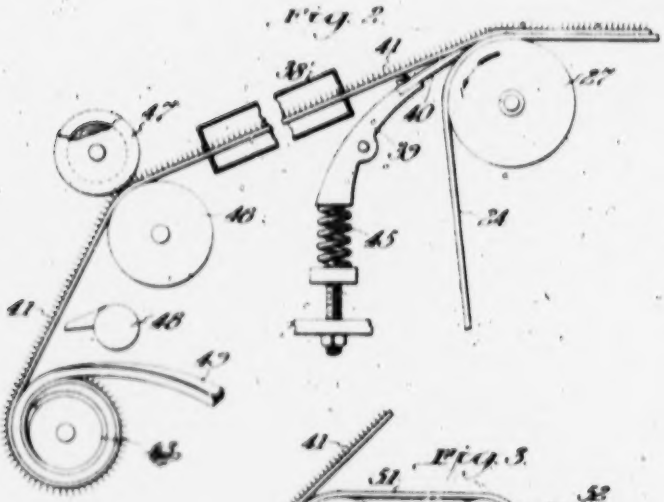

Fig. 3.

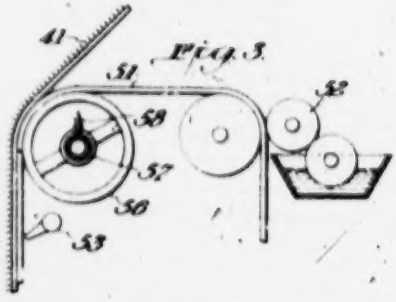

Fig. 4.

Fig. 5.

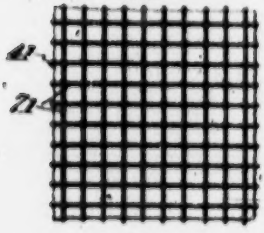

Fig. 6.

Inventor

Archibald F. Meston

By Potter, Pierce & Schaffer

Attorneys

Patented Nov. 19, 1940

2,222,539

UNITED STATES PATENT OFFICE

2,222,539

METHOD OF AND APPARATUS FOR MAKING PILE-SURFACED SHEETS

Archibald F. Meston, Middlesex, N. J., assignor, by mesne assignments, to Bohr-Manning Corporation, a corporation of Massachusetts

Application December 11, 1934, Serial No. 757,[illegible]

15 Claims. (Cl. 154—2)

This invention relates to material in sheet form characterized by having particles of small size integrally associated with a surface of the material. More in particular the invention has to do with a sheet comprised of relatively thin, flexible material and a simulated pile of attenuated fibers integrally attached to the flexible material, and a method of making the piled sheet.

Apparatus and methods have been invented for producing simulated pile fabrics wherein an adhesive covered surface is placed in an electric field and attenuated fibers such as rayon flocks are carried into the electric field and electrically deposited in oriented position on the adhesive covered surface. Heretofore, in making simulated piled fabric materials, the adhesive is spread over a base of fabric, paper or other material and this base becomes a constituent of the products. Products thus formed and constituted have proven too heavy or stiff for some of the purposes for which they have been intended. The addition of a base element to the product has added appreciably to the cost, also.

In the present invention, the adhesive is spread over the surface of a base member only during periods of attaching the fibers and drying and/or toughening the adhesive. The dried adhesive is then removed from the base member as a thin sheet with fibers attached, as a pile, on a surface of the sheet. The base member is again coated with adhesive for making additional product. Adhesives with different characteristics can be variously applied to the base surface and the products will differ correspondingly as to weight, flexibility, transparency and other properties. The preferred product is a thin, flexible, sheet of appreciable tensile strength which is piled with the density of fibers desired and which can be readily attached to surfaces with well known adhesives.

An object of the invention is to produce material as a homogeneous or integral sheet with a piled surface, and having the valuable decorative and constructive properties of velvet type fabrics.

Another object is to produce a thin, tough, flexible sheet with a piled surface which can be attached by adhesives or otherwise to the surfaces of walls and other objects for the purpose of decorating the surfaces.

Another object is to produce, at low cost, a piled surface with a very light backing that can be attached to simple fabrics and similar materials thereby giving such materials a rich appearance, added strength, and other desirable properties without adding greatly to the weight or cost of the materials or appreciably decreasing their flexibility.

Still another object is to produce a thin water proof and water tight sheet material that simulates fabrics in appearance and/or other physical properties.

A further object is to provide a method for forming a sheet product of the type described, stripping the sheet material from the surface upon which it was made and immediately attaching it to another surface.

The apparatus and procedure used in realizing the above mentioned and other objects will be more particularly described with reference to the accompanying partially diagrammatic drawings in which:

Fig. 1 is a side view, in sectional elevation, of apparatus for carrying out the method and making the product of the invention;

Fig. 2 is a side elevational view of apparatus for stripping the product from the carrier surface upon which it is formed and preparing it for storage;

Fig. 3 is a side view, in elevation, of apparatus for applying the product as a coating immediately after it is stripped from the carrier surface;

Fig. 4 is a perspective view of a fragmentary portion of the product to illustrate the deposition of the particles comprising the pile;

Fig. 5 is a plan view of the back of a portion of the product when reinforced by open mesh fabric; and

Fig. 6 is a side view of the object shown in Fig. 5.

In Fig. 1, member 1 is an electrode, grounded at 1', upon which terminate the lines of force of the electric field that deposits the fibers constituting the pile of the product. The opposing or complementary electrode upon which the other end of the field terminates is shown at 2. Electrode 2 is supported by members 3, 4 and 5 and insulating members, not shown, so that it can be maintained at high potential, with respect to ground, when connected to a source of high potential power by means of conductor 6. The just described assembly is positioned in any enclosure or casing 7, preferably made, at least in part, of transparent insulating material such as glass. The horizontal supporting member 5, suitably insulated, passes through wall 8 of casing 7 and one end of member 5 is connected to a source of high potential power as diagrammatically indicated at 9.

An endless belt 9 passing over electrode 2, and further positioned by pulleys 10, 11 and 12, is used

to move the attenuated particles for forming the pile of the product into the electrical field.

The flocks or other particles are introduced at controlled opening 13 and are blown by fan 14 through passage 15 into the space above pulley 10. Most of the particles fall on belt 9 but some may be carried into the electric field in suspension in the gas stream which is kept in motion by fan 14, especially if the gas velocity set up by the fan is high. The particles are lifted from belt 9 when under electrode 1 by the electric forces acting between electrodes 1 and 2. Particles which are not lifted from belt 9 or which fall back on the belt are carried over to passage 16 and fall into hopper 17 from whence they are returned by the gas stream flowing in passages 15 and 15 set up by fan 14 to be again subjected to the electric forces. A protective grounded screen 19 may be placed around the high potential parts of the apparatus.

Electrode 1 is mounted on rod 20 which is guided and positioned by bearing 21 and solenoid member 23. A spring 22 holds the electrode down on movable carrier 24 thus tensioning the latter. Solenoid 23 periodically reciprocates rod 20 to give a hammer motion to electrode 1 and bring about a jarring of belt 24. Belt 24 is the carrier upon which the product is formed. It is preferably an endless belt of conducting material, although it need not be, and is held in position and moved by pulleys 25, 26, 27 and 28. When of metal or other electrically conducting material, the face of the carrier is, of course, at the same potential as electrode 1 over which it passes and really constitutes the electrode upon which the lines of force terminate. It is convenient, however, to call member 1 the electrode and refer to member 24 as a surface positioned adjacent the electrode.

Preparatory to coating the carrier with the adhesive that comprises the product the carrier is cleaned of adhering matter by scraper 29 and moved under applicator 30 to receive a lubricant or other separating coating to make the separation or stripping steps, to be later described, easy of accomplishment.

Basin 31 holds the material, commonly an air drying plastic with the properties of an adhesive, that comprises an important part of the product and rolls 32 and 33 apply this material to carrier 24 in the manner well known in the coating art. Doctor knife 34 is set to control the final depth of material before it enters the electric field between electrodes 1 and 2 for deposition of pile. Heater 37 applies heat to the coated carrier from the back of the carrier and chamber 38 directs air heated by element 39 across the face of the product thereby evaporating and carrying off solvents from the adhesive material. Chamber 38 is another heating or conditioning device for further drying, polymerizing or otherwise toughening the piled coating on carrier 24. At roll 27, a separating knife 40 separates the product from the surface of carrier 24. The separated product as indicated at 41 is assembled as a roll 42 or otherwise disposed of, but it has been found advantageous before storing or using the product to gently agitate and brush it of poorly attached fibers. A vacuum cleaner unit as indicated at 43 is very useful for this purpose.

Where the stripped off product 41 is to be applied immediately to a surface in the manner illustrated in Fig. 3, for instance, the under surface (not piled) can be left slightly moist and sticky; but where the product is to be rolled or stacked upon itself for later use, the under surface that has just been exposed by separator 40 is preferably dried further by drier 38'.

In Fig. 3, edge 40 is for assuring the separation of product 41 from carrier 24 as the latter turns on pulley 27. Edge 40 is preferably a flexible member that extends across the face of carrier 24 and is supported against the surface of the carrier by a plurality of lever means 36, only one of which is indicated, a spring 46 exerting a controllable pressure on each lever 36. A drying chamber 38' to supplement drier 38 has been found useful and sometimes necessary when the adhesive contains slow drying plasticizers. The under (unpiled) side of the product is seldom dried sufficiently when it is separated from carrier belt 24 especially if the latter is impervious and does not permit solvent vapors to pass from the product through the belt. Drier 38' is adapted to dry the newly exposed under side of the product. The unpiled surface may be dusted with soapstone, bentonite dust, starch, or some other powdered material as a precaution against this surface retaining a sticky condition and means 48 comprises a duster for this purpose.

Referring further to Fig. 2, rolls 46 and 47 are provided in order that the product may be pulled evenly from the carrier belt 24 as shown. Pulley 46 has a flat surface that contacts the product 41 over its entire width but pulley 47 is cut away between the ends so that only the selvages are gripped between rolls 47 and 46 and the fibers of the pile can extend up into the recess in pulley 47 in upright position. Ordinarily the surface contact of pulley 46 is sufficient to provide the necessary tension in strip 41 but if the product does slip on pulley 46, pulley 47 is pressed down upon the selvages of the material to provide a positive grip thereon. The finished product is wound upon itself as shown at 43, spacing strips 49 being preferably wound into the roll at the selvages to prevent crushing of the pile. The several pulleys and rolls comprising the apparatus, especially members 27, 46 and 43 are turned in proper relationship in the manner known in the coating and other processing arts so that the tension in the various belts and strips is suitable for carrying out the method herein described.

Fig. 3 illustrates apparatus that has been found useful in attaching the product immediately after it is formed to sheet surfaces. The product shown as a piled sheet 41 immediately after it is stripped from carrier 24 as shown in Figs. 1 and 2 is connected with another sheet indicated at 51. When necessary, the sheet to be coated with product 41 is spread with adhesive, applicator 52 being used for the purpose, but I have found that the product can be removed from carrier 24 with the under side retaining a tacky, adhesive character and that it can be attached to other surfaces without additional adhesive. Especially good results are obtained when sheet 51 is run over a heated pulley while being pressed against sheet 41. Pulley 53 utilizes a perforated pipe 57 as a shaft, the hollow shaft functioning as a gas burner with many small jets 58. Extended space for air cooling need not be provided if means such as air jets 59 are used to cool the composite product leaving heated pulley 53. Very good results are obtained with thermo-plastic adhesives with this embodiment of the invention; and with an extension of the heating period, rubber cements are satisfactorily vulcanized in this manner.

The step just described has been found of great value in coating open work fabrics. To di-

rectly coat a fabric with a pile in the manner heretofore described, it is usually necessary to surface coat the fabric with a filler before the adhesive that is to hold the pile is applied. If this is not done, a very great amount of adhesive is taken up by the fabric and the resulting product is apt to be heavy, stiff and expensive. With the present invention, the pile is first incorporated into a thin, flexible, relatively inexpensive base and this product in dried or semi-dried condition is applied directly to the fabric to be given a piled surface, for instance, to a woolen cloth to be used in the manufacture of rain coats.

A particular characteristic of the product of the invention is the strength given the adhesive upon drying by the flock or other fibers used in forming the desired pile. In Fig. 4, a portion of product 41 is shown in an exaggerated manner. The adhesive is represented at 42, fibers in reclining position are shown at 43 and upright fibers are shown at 44. It is difficult to make all the fibers deposited upon an adhesive covered surface by electrical means stand erect. The first fibers to touch the adhesive usually bend over and become embedded more or less lengthwise in the adhesive as indicated at 43. If the electric field is very strong and especially if a corona discharge is present, quite a few of the fibers lie flatwise on the surface of the adhesive while the first few are being deposited perpendicular to the surface as indicated at 44. The reclining fibers do not make for a satisfactory pile per se, but they do reinforce and strengthen the adhesive as it dries and make for a desirable product of the kind herein described. From about one to ten percent of the fibers recline, depending upon the strength of the electric field, and other more or less controllable conditions of deposition, and these fibers are well hidden by the erect fibers constituting the pile proper. So advantage is taken of the strengthening effect of the reclining fibers without incurring loss in the appearance of the product.

Reinforcing fibers may be separately deposited, either electrically or mechanically, on either side of the adhesive layer before electrically depositing the pile-forming flock, or reinforcing fibers may be added to the adhesive substance before it is formed into a layer, for example by admixing fibers with the adhesive in container 31.

Figs. 5 and 6 illustrate the product as reinforced in strength by having a net or open fabric 71 attached to the unpiled surface. The net adds but little to the cost and detracts but little from the flexibility of the product, but it does add appreciably to the strength of the sheet.

The reinforcing net may be associated with the adhesive layer, for example by feeding a web of net material between roll 33 and carrier 24 in the apparatus of Fig. 1, or it may be associated with the adhesive layer after stripping from carrier 24, similarly to the application of backing layer 51 in Fig. 3.

Two sheets of the product can be joined back to back giving a material having a pile on both surfaces. Walls can be "papered" with the sheeted material described and when made with stretchable material it can be pulled tightly over irregular surfaces while being applied. Where a surface can be maintained at constant potential, as grounded, the sheeted product can be applied to that surface by placing an electrode energized from a high voltage direct current source in front of the sheet. The sheet will take up a charge of electricity and be attracted to the surface to be covered. Many other uses and applications of the product of the invention will be obvious to those skilled in the art from the foregoing description of the invention.

The following is an illustrative example of the method of operation of this invention. Electrodes 1 and 2 are separated from 2½ to 4 inches and electrode 2 is connected to a source of unidirectional current at from 20 to 40 kilovolts, the voltage to be regulated so that there is no likelihood of sparking between the electrodes. Belt 24 of smooth brass which has been cleaned thoroughly is put in motion by pulleys 25 and 27, coated with a thin film of gelatine by applicator 30, then spread with coating wheel 33 with an adhesive made up of cellulose derivatives, plasticizers, and solvents (for example, a coating material used for forming artificial leather), and this is smoothed out by doctor knife 34 to a depth of .03 inch. The speed of belt 24 may be from 1 to 6 feet per minute depending on conditions and the mass of pile desired. Belt 9 is made to revolve at a speed several times faster than belt 24, fan 14 is started and rayon flocks approximately ¼ inch in length are introduced at 13. Heaters 36 and 37 are put in operation as is the blower, not shown, which forces air through duct 35. Heaters 38 and 38' are put in operation in due time as required. The other operations for completing the formation of the product are as previously described.

A wide range of adhesive substances may be used as the base of the pile-surfaced sheet of the invention; for example, compositions which harden by drying or evaporation, such as solutions of cellulose derivatives, natural and synthetic resins, and other plastic materials in organic or aqueous solvents; compositions which harden by the action of heat, such as those containing the heat reactive phenol-formaldehyde and glycerol-phthalic anhydride resins; compositions which harden by cooling, such as those containing vinyl resins; compositions which harden by absorption of oxygen, such as those containing air-drying oils; compositions which harden upon chemical treatment, such as viscose; and compositions which may be hardened by vulcanization, such as those containing rubber.

The terms "indurating" and "indurated" are used herein to denote broadly the various hardening, toughening, drying, setting or curing processes used in the arts.

I claim:

1. A method of making a sheet material having a piled surface which comprises forming a layer of an adhesive substance upon a supporting surface, electrically depositing attenuated particles in erect position on said layer, indurating said layer and stripping the layer from the supporting surface.

2. A method of making a sheet material which comprises forming a layer of a hardenable plastic composition upon a supporting surface, depositing attenuated particles on said layer by means of an electrical field, indurating said layer and stripping the layer from the supporting surface.

3. A method of making a sheet material which comprises forming a layer of a hardenable plastic composition upon a supporting surface, depositing attenuated particles on said layer by means of an electrical field, indurating said layer, stripping the layer from the supporting surface and

[fol. 720]

attaching said layer to a layer of backing material.

4. A method of making a sheet material which comprises forming a layer of a hardenable cellulosic composition upon a supporting surface, depositing attenuated particles on said layer by means of an electrical field, indurating said layer and stripping the layer from the supporting surface.

5. A method of making a sheet material which comprises forming a layer of a hardenable plastic composition upon a supporting surface, depositing textile fibers on said layer by means of an electrical field, indurating said layer and stripping the layer from the supporting surface.

6. A method of making a sheet material which comprises forming a layer of a hardenable cellulosic composition upon a supporting surface, depositing rayon flock on said layer by means of an electrical field, indurating said layer and stripping the layer from the supporting surface.

7. A method of making sheet material having a piled surface which comprises forming a layer of an adhesive substance upon a supporting surface, electrically depositing attenuated particles in erect position on said layer, indurating said layer sufficiently to permit stripping of said layer from said surface, stripping said layer from said surface and further indurating the layer.

8. A method of making a sheet material having a piled surface which comprises forming a layer of an adhesive substance upon a supporting surface, electrically depositing attenuated particles in erect position on said layer, indurating said layer sufficiently to permit stripping of said layer from said surface, stripping said layer from said surface, associating a reinforcing material with said layer and further indurating the product thus formed.

9. A method of making an extended strip of sheet material having a piled surface which comprises continuously forming a layer of an adhesive substance upon a supporting surface, electrically depositing attenuated particles in erect position on said layer, indurating said layer and removing the layer from the supporting surface in a continuous strip of extended length.

10. A method of making an extended strip of sheet material having a piled surface which comprises continuously forming a layer of a hardenable plastic composition upon a supporting surface, electrically depositing attenuated particles in erect position on said layer, indurating said layer and removing the layer from the supporting surface in a continuous strip of extended length.

11. A method of making a sheet material having a piled surface which comprises forming a layer of an adhesive substance upon a movable supporting surface, passing said surface through an electrical field while supplying pile-forming fibers into said field, indurating the adhesive layer and stripping the indurated layer from the supporting surface.

12. Apparatus for making sheet material having a pile surface, comprising a pair of opposed electrode members, means for maintaining an electrical field between said electrode members, supporting surface members movable through said electrical field adjacent each of said electrode members, means for supplying a layer of adhesive composition upon one of said supporting surface members, means for moving both of said supporting surface members through said electrical field and means for supplying pile-forming materials to said electrical field.

13. Apparatus for making sheet material having a pile surface, comprising a pair of opposed electrode members, means for maintaining an electrical field between said electrode members, supporting surface members movable through said electrical field adjacent each of said electrode members, means for applying a layer of adhesive composition to one of said supporting surface members before it passes into the electrical field, means for indurating said adhesive layer after it leaves the electrical field, means for stripping the indurated adhesive layer from the supporting member, and means for supplying pile-forming materials to the electrical field.

14. Apparatus for making sheet material having a pile surface, comprising a pair of opposed electrode members, means for maintaining an electrical field between said electrode members, supporting surface members movable through said electrical field adjacent each of said electrode members, means for applying a layer of adhesive composition to one of said supporting surface members before it passes into the electrical field, means for indurating said adhesive layer after it leaves the electrical field, means for stripping the indurated adhesive layer from the supporting member, means for further indurating said adhesive layer after stripping, and means for supplying pile-forming materials to the electrical field.

15. A method of making an extended strip of sheet material having a piled surface which comprises continuously forming a layer of an adhesive substance upon a supporting surface, electrically depositing reinforcing fibers upon said layer, electrically depositing pile-forming fibers in erect position on said layer, indurating said layer and removing the layer from the supporting surface in a continuous strip of extended length.

ARCHIBALD P. MESTON.

[fol. 721]

Dec. 3, 1940. J. O. AMSTUZ 2,223,476

METHOD FOR MAKING PILE FABRIC

Filed Nov. 2, 1936 2 Sheets-Sheet 1

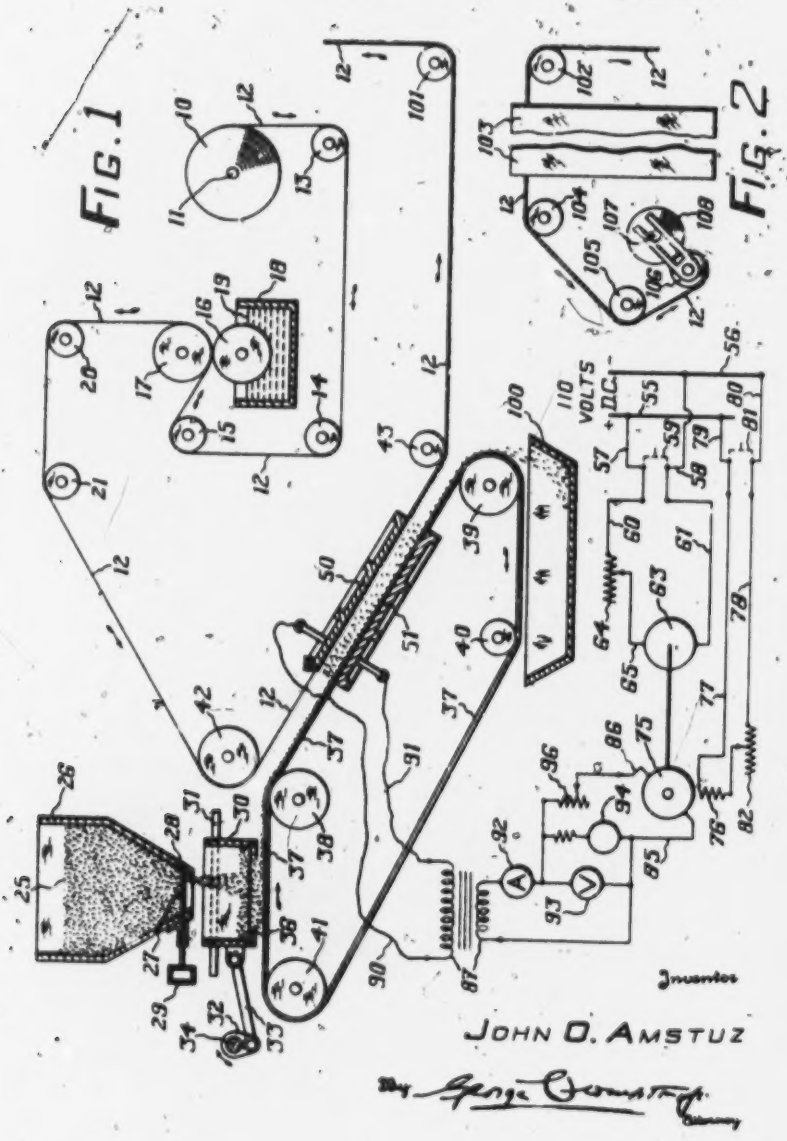

Inventor

JOHN O. AMSTUZ

By George Amstutz

[fol. 722]

Dec. 3, 1940. J. O. AMSTUZ 2,223,476

METHOD FOR MAKING PILE FABRIC

Filed Nov. 2, 1936 2 Sheets-Sheet 2

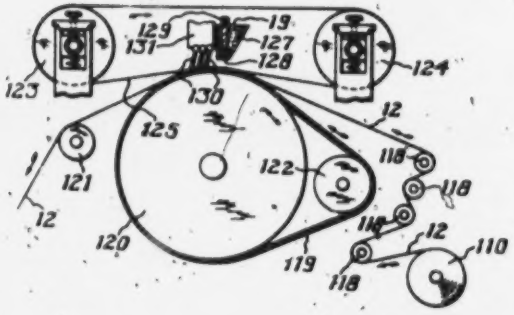

FIG. 5

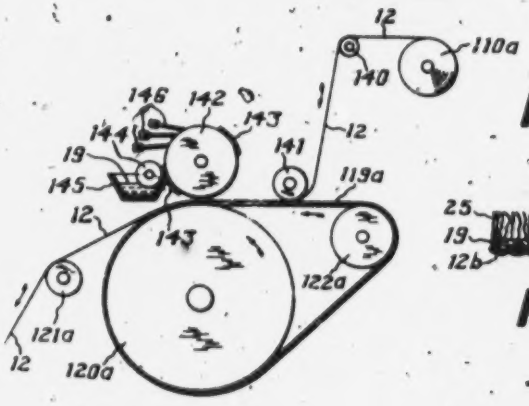

FIG. 6

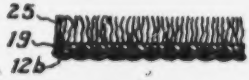

FIG. 4

FIG. 3

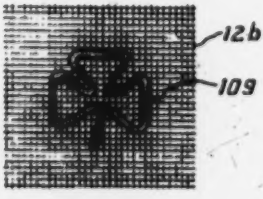

FIG. 7

Inventor

JOHN O. AMSTUZ

By George Crompton

Attorney

[fol. 723]

Patented Dec. 3, 1940

2,223,476

UNITED STATES PATENT OFFICE

2,223,476

METHOD FOR MAKING PILE FABRIC

John O. Amptan, Troy, N. Y.

Application November 2, 1936, Serial No. 108,704

12 Claims. (Cl. 91—68)

The invention relates to the manufacture of pile fabric.

One object of the invention is to provide a new type of pile fabric which can be produced at low cost. Another object of the invention is to form a pile fabric with a paper backing. Another object of the invention is to provide a rapid method for the manufacture of a pile fabric in an unlimited number of designs. Another object of the invention is to deposit flock upon a sheet surface in a fine coating with the fibres arranged in parallelism. Another object of the invention is to provide a textile article coated with flock in which the fibres are laid normal to the plane of the textile material. Other objects will be in part obvious or in part pointed out hereinafter.

The invention accordingly consists in the features of construction, combinations of elements, arrangements of parts, and in the several steps and relation and order of each of said steps to one or more of the others thereof, all as will be illustratively described herein, and the scope of the application of which will be indicated in the following claims.

In the accompanying drawings illustrating the mechanical features of this invention,

Figure 1 is a diagrammatic view illustrating apparatus for the manufacture of a pile fabric in which the pile is continuous and attached to a backing of paper or cloth.

Figure 2 is the representation of a drying room and take-up device.

Figure 3 is a greatly magnified cross sectional view of a sheet of the pile fabric constructed in accordance with the invention in which the backing is paper.

Figure 4 is a view similar to Figure 3 illustrating a pile fabric of the invention in which the backing is cloth.

Figure 5 is a diagrammatic view of stenciling apparatus which may be substituted for the adhesive coating apparatus of Figure 1 in order to put the pile on to the fabric in the form of a design.

Figure 6 is a diagrammatic view of printing apparatus utilizing an engraved roll which may be substituted for the apparatus of Figure 5 or the adhesive applying apparatus of Figure 1.

Figure 7 is an illustration of a pile fabric incorporating a design manufactured according to the invention.

Referring first to Figure 1, I provide a roll of sheet material 10. This may be paper or it may be cloth. If cloth is used preferably a fairly close weave will be employed but I may use a relatively inexpensive grade of cloth. Cotton sheeting is a good example of the cloth that may be employed and desirably is dyed the same color as that of the pile that is to be applied.

The roll of sheet material 10 is wound on a roller 11 which is mounted in any suitable manner as is well known in the textile finishing art and a suitable friction brake may be applied if desired. The sheet material 12 passes down around a roller 13 and up around a roller 14 and around a roller 15. It then passes between an adhesive applying roller 16 and a pressure roller 17. The roller 16 revolves in a trough 18 filled with adhesive 19 and suitable apparatus may be provided for heating the adhesive. The sheet material 12 then passes upwardly to a roller 20 then over a roller 21 whence it is delivered to that portion of the apparatus which applies the pile. Some or all of the rollers 13, 14, 15, 16, 17, 20, and 21 are positively rotated and preferably all of them are rotated in synchronized relation at a given peripheral velocity, but the drive means for the rollers has not been illustrated as such is well understood.

Any suitable adhesive 19 may be used. As an illustrative example I mention the various glues. I may use a printing glue, for example the relatively flexible glue described in Dickinson Patent No. 982,896 or a glue which is particularly suitable for textile printing such as described in Mills Patent No. 969,113. For certain purposes and to achieve certain results I may tan the glue with formaldehyde in order to resist the action of water. In mentioning glue as the adhesive I wish it to be understood that the invention is not limited to the use thereof and in mentioning particular types of glue it should be understood that I may use other types, the examples given being merely examples of practical ways to carry out the invention.

I provide a quantity of flock 22 which I may place in a hopper 24. The term flock is usually applied to the shearings from woolen cloth produced in the finishing mill. These shearings comprise separated fibres of substantially uniform length. Preferably I use fibres of as uniform length as possible, but I may use fibres of materials other than wool, for example fibres of silk, cotton, or rayon.

The hopper 24 has a suitable sliding gate 27 controlling the bottom opening 28 thereof and the gate has a handle 29 by means of which the operator can cause flock to be delivered as desired.

[fol. 724]

I find that better results are achieved if the flock is well broken up prior to the application thereof, as will be described. Furthermore, it should preferably be fairly well distributed laterally of the machine. I therefore provide a box 29 to receive the flock from the hopper 26, the box being mounted on slideways 31 to move rectilineally and a crank 32 and pitman 33 being provided to vibrate the box 29. The crank 32 is mounted on a suitable shaft 34 driven from any suitable source of power at a speed of for example 400 R. P. M. In the bottom of the box 29 is a screen 36 through which the flock passes on to a traveling belt 37.

The traveling belt 37 is preferably slightly wider than the sheet material 12 and travels at a variable speed, being driven by a variable speed motor, not shown. The belt 37 passes around rollers 38, 39, 40, and 41, one of which is positively driven by the variable speed motor. The purpose of varying the speed of the belt is to find for each different condition by quick empiricism the best speed to deliver the right amount of flock to the apparatus. The speed range should be both above and below that of the sheet material 12. The belt speed is varied in connection with the gate opening 28 and the particular mesh of the screen 36. Various modifications of the means to deliver flock may be adopted, for example an electric vibrator with rheostat control may be substituted for the crank 32 and pitman 33 and it is also desirable to provide an electric or pneumatic vibrator to vibrate the hopper 26 to eliminate packing of flock in the hopper itself. Electric and pneumatic vibrators are now well known and are regular commercial products which can be procured in a variety of sizes. Conditions vary widely with particular specifications of the ultimate fabric that is being produced but with variable controls such as have been described, only a few minutes' variation of the adjustments herein described will readily determine the correct setting for all thereof in a given apparatus.

Preferably the belt 37 passes downwardly between the rollers 39 and 40 at an incline determined by the following considerations: It is desired that sheet material 12, which after leaving the roller 41 passes between rollers 42 and 43 in a course parallel to that of the belt 37, shall sag as little as possible. The vertical condition is the condition of least sag. On the other hand, it is not desired that the flock shall move on the belt 37 by reason of the force of gravity. The limiting factor here is the point where the coefficient of friction of the flock is equal to its component along the downward path due to gravity. Satisfactory results can be achieved with a pitch about as shown in Figure 1 and somewhat steeper inclinations may be employed.

I provide an upper electrode 50 and a lower electrode 51. These may be made of metal, for example of aluminum for lightness, and may be of ribbed construction as shown, for the same reason. They may be covered with insulating material, such as resinoid or hard rubber, which is an advantage if the coating is done with higher voltages or when the flock is too conductive and may facilitate the forming or sustaining of an arc between the electrodes. The surfaces of the electrodes 50 and 51 that face each other are plane surfaces and preferably as nearly as possible they are in contact respectively with the back side of the sheet material 12 and the under side of the belt 37. The belt 37 is preferably fairly thin and may be made of a suitable grade of denim cotton cloth so that the flock will be very close to the electrode 51.

For energizing the electrodes 50 and 51 to produce an electrostatic field between them, I provide high voltage alternating current variable frequency apparatus which may be as in the following illustrative example:

Still referring to Figure 1, I provide any suitable source of direct current connected to main power lines 56, 56. The voltage may be as desired, for example 110 volts. The conductor mains 56, 56 are connected by conductors 57 and 58 and a knife switch 59 to conductors 60 and 61. The conductor 61 leads to a terminal of a D. C. motor 63. The conductor 60 is connected to a rheostat 64 which is in turn connected by means of a conductor 65 to the other terminal of the motor 63. The motor 63 may be series or shunt wound, as desired, and the rheostat 64 may be in the outside conductor or may be in the shunt circuit for the field winding, as desired, or any other suitable variation may be adopted. The motor 63 is therefore a variable speed motor and for it may be substituted any other variable drive subject to control by fine increments of speed change, for example any form of variable speed friction gear drive apparatus may be used, many types thereof being now well known.

The motor 63 is coupled to a single phase A. C. generator 70. The field 76 of the generator 70 may be excited by current from the D. C. line 56, 56, conductors 77, 78, 79, 80, and a knife switch 81 being provided for this purpose. I preferably provide a further rheostat 82 for controlling the voltage of the generator 70.

The conductors 99, 99 from the generator 70 are connected to the primary of a step-up transformer 87. The secondary of the transformer 87 is connected by conductors 88 and 91 to the electrodes 50 and 51 respectively. In the conductor line 88 is preferably located an ammeter 92 and across the conductors 88 and 88 is preferably connected a volt meter 93. I further provide connected between the conductors 88 and 88 a frequency or cycle meter 94. Furthermore, in circuit in the conductor 88 I place a rheostat 98.

I am enabled by this apparatus to achieve a voltage across the electrodes 50 and 51 of the order of one hundred thousand volts which I can vary between five thousand volts and one hundred thousand volts. The gap between the belt 37 and the sheet material 12 may be varied but I have found that a gap of one inch to two inches works well in actual practice. By driving the motor 63 at varying speeds of rotation between 600 R. P. M. and 1800 R. P. M., I am enabled to change the frequency between ten cycles and thirty cycles, using a generator 70 which is the equivalent of a two-pole generator.

I have discovered that comminuted textile material such as flock may be separated and oriented by means of an alternating current electrostatic field of high voltage of a given frequency for certain given conditions involving the gap distance of the field, the voltage strength, and the particular type of flock employed. When the electrodes 50 and 51 are impressed with opposite sign voltages, the flock simply bridges the gap between the sheet material 12 and the belt 37 in string formation and produces a short circuit and is ineffective for coating the sheet material 12. When the sign of each electrode changes with a frequency of the order indicated, the flock

tends to dance with the alternations of the current. Flock of a given particle size has a natural frequency between electrodes spaced by a given gap. By selecting the electric frequency to correspond with the flock frequency, the flock particles are broken up and prevented from producing string formation. As the frequency of the electric current nears the frequency of the flock, the flock is raised higher and higher until a regular cloud of flock between the electrodes is produced. In other words, the propulsive impulses of the alternating current in opposite directions tend to propel the flock first toward and then from the adhesively coated backing material, as the direction of current flow and the potential in the field alternate. Under the influence of a particular voltage in the field, it takes a particular flock particle a predetermined length of time to move across the field, from a plane adjacent the lower electrode to the plane of the adhesively coated sheet, depending upon the characteristics of the flock and, of course, the space between the electrodes. Flock reaching the surface 12 which has been, as described, coated with glue or other adhesive, is retained there. All particles of flock orient themselves normal to the surface of the material 12 and the result is a depositing of pile upon the material 12 in evenly spaced condition. If the flock particles are not retained after they are projected toward the adhesive by a propulsive impulse in one direction, they will be projected away from the adhesively coated sheet during the other half of the alternating current cycle, whereupon their direction of movement will immediately be reversed, during the next cycle and they will be again projected toward the sheet. As stated above, the frequency of the alternating current cycle is adjusted to correspond to this frequency of movement of the flock material so that the current impulses in opposite directions last for the correct duration of time to cause the particles to fluctuate back and forth between the belt 37 and the sheet material 12. The expression "frequency of comminuted material" in the claims means the natural characteristics of the material under the influences referred to above.

If the delivery of flock from the screen 30 is of the right amount, practically all of it will be deposited upon the sheet material 12. Excess flock over a certain amount simply drops back as it finds no more adhesive to attach to. Preferably more flock is delivered than is needed so there will be certain to be enough and the excess falls into a collecting pan 103.

From the roller 63 the now surfaced material passes to a roller 101 whence it is directed upwardly around a roller 102 into a drying room 103 where the material may be festooned then out around a roller 104 and roller 105 to a constant speed take up roller 106 by means of which it is wound on a roll 107 of the self-winding variety. The roller 105 is positively driven and preferably so also are the rollers 101, 102 and 104. The drying room 103 and the apparatus shown in Figure 2 may be located on a floor above the apparatus shown in Figure 1. By the particular arrangement of apparatus shown I avoid touching the coated side of the material with anything until it is ultimately wound into the roll of finished material 106 but even this may be dispensed with as the material may be cut off into sheets as it is delivered.

Considering now the product formed, Figures 3 and 4 respectively illustrate it, Figure 3 showing the pile fabric of the invention with a paper back 12a and Figure 4 showing the pile fabric of the invention with a cloth back 12b. In each case a layer of adhesive 10 unites the individual fibres of flock or other material 26 to the backing 12a and 12b respectively. It will be noted that the fibres of material 26 stand parallel to each other and normal to the backing and this result is achieved in actual practice with the use of the apparatus described. The individual fibres of material 26 have like charges of electricity and so repel each other which is why they stand parallel to each other and the repulsion also spaces them evenly on the backing. Although I have particularly mentioned flock, other comminuted fibrous material may be employed, for example rabbit's fur such as is used in the manufacture of hats.

The article of the invention simulates billiard cloth and, with a paper backing may be used for decorative purposes where permanency and durability are not important qualities. For example it may be effectively employed as a table covering in restaurants and the like intended to be discarded after a single use. When embodied in material having a cloth backing 12b it resists tearing more readily and has a somewhat more permanent character especially if formaldehyde has been used to tan the glue. It then may be used for many decorative purposes and as a substitute for woven pile fabrics. Either form can be used for wall paper or the like.

The apparatus already described produces a pile fabric with a continuous or solid coating. It may be desired to coat the paper or cloth with fibres according to the invention in the form of a design. As shown in Figure 7 I may produce a textile fabric comprising a backing 12b with figures 108 of pile fabric formation and in any desired design. Such material may be used for a wide variety of purposes, in fact wherever cloth is used, as the design may be small or large and cover a small or a large area and the backing 12b may be previously printed if desired.

Two modifications for applying the pile in the form of a design are illustrated in Figures 5 and 6. Referring first to Figure 6, I have illustrated a stencilling apparatus of the general type disclosed in patent to Hanington No. 1,546,834. I provide a roll 110 of paper or cloth 12 which is conducted around small rollers 110 and then over a blanket 110 and a drum 120 to a roller 121 whence it is delivered to the roller 62 and the rest of the apparatus shown in Figure 1. The blanket 110 extends also around a roller 122 as shown. Between rollers 123 and 124 suitably journalled as shown and as also described in the patent to Hanington referred to, extends a stencil 125. The stencil 125 may be of the type described in the patent to Hanington referred to or may be of other well known varieties, for example it may be of sheet metal with openings therein in the form of a design. The patent to Hanington referred to describes a stencil which is of open mesh material with many of the meshes blocked off or filled. The advantage of this particular stencil is that a design in the form of a closed design without any break may be achieved.

The stencilling apparatus may further include a container 127 for adhesive 10 which extends throughout the width of the machine and which container has a restricted opening 128 in the bottom thereof and a slide 129 arranged for controlling the flow of adhesive. Three pressers 130 are provided and held by a member 131 which is

supported by the machine. These pressers otherwise known as doctor scrapers may be made of brass or steel or rubber and they act to force the adhesive through the openings in the stencil and at the same time prevent an excess of adhesive from being carried forward on the stencil.

Referring now to Figure 6, I may provide printing apparatus as therein illustrated. The roll 116a of paper or cloth 12 passes over a roller 140 and then downwardly under a roller 141 into contact with a blanket 118a which extends around a drum 120a and a roller 122a. An engraved printing roller 142 has an engraved surface 143. This may be a copper or steel engraving. In contact with the engraved surface 143 is a roller 144 revolving in a trough 145 containing the adhesive 19. Adhesive is transferred to surface 143 and a plurality of doctor blades 146 press the adhesive into the depressions and scrape it from the elevated surfaces. The adhesive is then transferred to the sheet 12 where the sheet passes between the surface 143 and the blanket 118a. The sheet 12 then passes over a roller 121a and thence to the roller 42 and the rest of the apparatus from that point on shown in Figure 1 and ultimately to the drying and take up apparatus of Figure 2.

Different types of designs will be respectively applied by the different types of apparatus herein illustrated as the stencil type is better adapted for coating where there are large areas of design 100 and the engraved roller apparatus is preferable where the designs 100 are relatively small in area. Other types of apparatus for coating sheet material 12 with adhesive in the form of a design whereby comminuted fibrous material may be applied thereto as hereinbefore disclosed may be used.

It will thus be seen that there has been provided by this invention a method and apparatus and an article in which the various objects hereinbefore set forth together with many thoroughly practical advantages are successfully achieved. As various possible embodiments might be made of the mechanical features of the above invention and as the art herein described might be varied in various parts, all without departing from the scope of the invention, it is to be understood that all matter hereinbefore set forth or shown in the accompanying drawings is to be interpreted as illustrative and not in a limiting sense.

I claim:

1. In the art of coating sheet material with fibrous comminuted material, the improvement which consists in feeding the sheet material and the comminuted material into an electrostatic field of alternating potential, and controlling the cycle of alternations to make the positive and negative fluctuations equal in duration and potential.

2. In the art of producing pile surface sheet material, the process which comprises establishing an electrostatic field alternating in a cycle in which the positive and negative fluctuations are equal in duration and potential, introducing adhesively coated sheet material into said field and introducing comminuted pile surface forming material into the field, whereby the comminuted material is propelled toward and from said surface until it becomes adhesively united thereto.

3. In the art of producing pile surface sheet material, the process which comprises establishing an alternating electrostatic field, controlling the cycle of alternations to make the positive and negative fluctuations equal in duration and potential, controlling the frequency of alternations between ten and thirty cycles per second, introducing adhesively coated sheet material into the field and introducing comminuted pile surface forming material into the field.

4. In the art of producing pile surface sheet material, the process which comprises establishing an electrostatic field alternating in a cycle in which the positive and negative fluctuations are equal in duration and potential, the frequency of said field being not less than ten cycles, and introducing adhesively coated sheet material and comminuted pile surface forming material into the field in spaced relation, whereby the comminuted material is propelled toward and from said surface until it becomes adhesively united thereto.

5. In the art of producing pile surface sheet material, the process which comprises establishing an electrostatic field alternating in a cycle in which the positive and negative fluctuations are equal in duration and potential, introducing adhesively coated sheet material and comminuted pile surface forming material into the field in spaced relation, whereby the comminuted material is propelled toward and from said surface until it becomes adhesively united thereto, and adjusting the frequency of alternations in said cycle to substantially correspond to the frequency of the comminuted material to effect maximum propulsion of the material toward and from the sheet.

6. In the art of producing pile surface sheet material, the process which comprises establishing an electrostatic field alternating in a cycle in which the current fluctuations in opposite directions are equal in duration and potential, introducing adhesively coated sheet material and comminuted pile surface forming material into the field in spaced relation, whereby said fluctuations in opposite directions tend to propel the material toward and from the sheet, and adjusting the cycle of fluctuations to correspond to the frequency of the material and time required to move the material through said space under the potential existing in the field.

7. In the art of producing pile surface sheet material, the process which comprises conducting an adhesively coated backing sheet between spaced electrodes, conducting comminuted pile surface forming material between said electrodes in spaced relation to the sheet, establishing between said electrodes an electrostatic field alternating in a cycle in which the current fluctuations in opposite directions are equal in duration and potential, thereby propelling the material in the field toward and from the backing sheet at a speed determined by the potential in the field, and adjusting the frequency of the cycle of alternations to make each propulsive impulse of each cycle substantially correspond in time to the time required to move a particle of material in one direction through the electrostatic field.

8. In the art of producing pile surface sheet material, the process which comprises conducting a backing sheet having its undersurface adhesively coated between spaced electrodes, conducting comminuted pile surface forming material between said electrodes in spaced relation below the sheet, establishing between said electrodes an electrostatic field alternating in a cycle in which

[fol. 727]

the current fluctuations in opposite directions are equal in duration and potential, thereby propelling the material upwardly and downwardly in the field toward and from the backing sheet at a speed determined by the potential in the field, and adjusting the frequency of the cycle of alternations to make each upwardly directed propulsive impulse of each cycle substantially correspond in time to the time required to lift a particle of material through said space to the adhesively coated backing sheet.

9. In the art of producing pile surface sheet material, the process which comprises establishing an electrostatic field alternating in a cycle in which the current fluctuations in opposite directions are equal in duration and potential, introducing adhesively coated sheet material and comminuted pile surface forming material into the field in spaced relation, whereby said fluctuations in opposite directions propel the material in the field toward and from the backing sheet at a speed determined by the potential in the field, and adjusting the frequency of the cycle of alternations and the potential of the fluctuations to make each propulsive impulse of each cycle correspond in potential and time to the propulsive force and time required to move an article of material through said space to said backing sheet.

10. In the art of producing pile surface sheet material, the process which comprises establishing an electrostatic field alternating in a cycle in which the current fluctuations in opposite directions are substantially equal in duration and potential, introducing adhesively coated sheet material and comminuted pile surface forming material into the field in spaced relation, whereby said fluctuations in opposite directions propel the material in the field toward and from the backing sheet at a speed determined by the potential in the field, and adjusting the potential in the field to make each propulsive impulse of each cycle have the force required to move a particle of material through said space to the backing sheet during the time in the cycle that said impulse is effective.

11. In the art of producing pile surface sheet material in continuous lengths, the process which comprises providing, between spaced upper and lower electrodes, an electrostatic field of alternating potential energized by alternating current, the duration and amplitude of the negative and positive impulses of which are substantially equal, introducing adhesive surface sheet material into said field adjacent the upper electrode with the adhesive facing downwardly, bringing comminuted pile surface forming material into the field adjacent the lower electrode and below said surface of the sheet material, and electrically propelling the comminuted material in a direction counter to gravity and into the adhesive, whereby a dense pile surface coating is obtained in which the long axes of the comminuted material are substantially perpendicular to the plane of the adhesive, and whereby the excess of comminuted material not embedded in the adhesive is readily removed from the pile coated surface.

12. In the art of producing pile surface sheet material, the process which comprises conducting an adhesively coated backing sheet between spaced electrodes with the coated surface facing downwardly, conducting comminuted pile surface forming material between said electrodes in spaced relation below said sheet, establishing between said electrodes an electrostatic field alternating in a cycle in which the current fluctuations in opposite directions are substantially equal in duration and potential, utilizing the fluctuations in one direction to propel the material in the field upwardly toward the backing sheet to produce a dense pile surface coating on the sheet in which the long axes of the comminuted material are substantially perpendicular to the plane of the adhesive, and utilizing the fluctuations in the opposite direction to remove the excess of comminuted material not embedded in the adhesive from the pile coated surface.

JOHN C. AMSTUZ.

CERTIFICATE OF CORRECTION.

Patent No. 2,223,476. December 3, 1940.

JOHN C. AMSTUZ.

It is hereby certified that error appears in the printed specification of the above numbered patent requiring correction as follows: Page 5, first column, line 40, claim 10, for the word "spaced" read --speed--; and that the said Letters Patent should be read with this correction therein that the same may conform to the record of the case in the Patent Office.

Signed and sealed this 4th day of February, A. D. 1941.

(Seal)

Henry Van Arsdale,
Acting Commissioner of Patents.

[fol. 728]

Feb. 11, 1941. G. CROMPTON, JR 2,231,324

APPARATUS FOR AND METHOD OF MAKING HAT BATS

Filed May 4, 1938

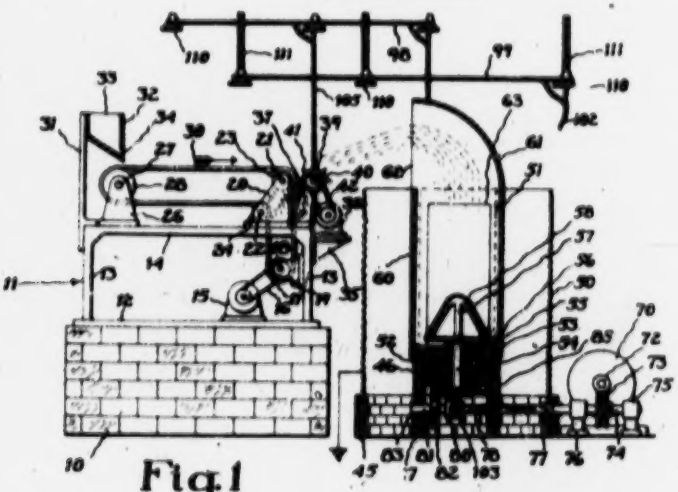

Fig. 1

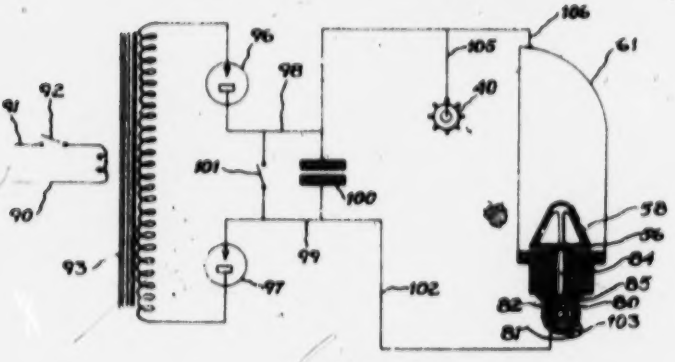

Fig. 2

Fig 3

Inventor

George Crompton Jr.

[fol. 729]

Patented Feb. 11, 1941

2,231,324

UNITED STATES PATENT OFFICE

2,231,324

APPARATUS FOR AND METHOD OF MAKING HAT BATS

George Crompton, Jr., Worcester, Mass., assignor to Hat-Blocking Corporation, Troy, N. Y., a corporation of Massachusetts

Application May 4, 1938, Serial No. 206,016

6 Claims. (Cl. 19—144)

The invention relates to apparatus for and a method of making hat bats.

One object of the invention is to provide a method of making hat bats which shall greatly reduce the time necessary to shrink the fur. Another object of the invention is to provide a method and apparatus greatly speeding up the production of bats. Another object of the invention is to make a superior felt. Another object of the invention is to standardize hat bodies so that the ultimate size of the hat with a given amount of fur and size of forming cone can be predicted with more certainty. Another object of the invention is to permit the use of a substantial amount of filler fur yet without any loss of time in the shrinking of the hat body. Another object of the invention is to standardize the shrinking of hat bodies. Another object of the invention is to permit the use of smaller forming cones. Another object of the invention is to reduce the amount of shrinking in the felting of the fur between the starting operation and the final sizing operation. Another object of the invention is to so form a hat bat that a smaller bat may be usable to make a given sized hat. Another object of the invention is to permit the use of shaped cones for the formation of hat bats. Other objects will be in part obvious or in part pointed out hereinafter.

The invention accordingly consists in the features of construction, combinations of elements, arrangements of parts, and in the several steps and relation or order of each of said steps to one or more of the others thereof, all as will be illustratively described herein, and the scope of the application of which will be indicated in the following claims.

In the accompanying drawing showing one of the many possible embodiments of the mechanical features of this invention—

Figure 1 is a view partly in side elevation and partly in vertical section showing an apparatus constructed in accordance with the invention.

Figure 2 is a wiring diagram.

Figure 3 is a side elevation of a forming cone of special shape which may be used in accordance with the present invention.

Referring first to Figure 1, I provide a base 10. This base 10 is preferably made of porcelain bricks put together without any mortar. As there are no great mechanical strains or stresses in the apparatus to be mounted on the base 10 the bricks may be merely laid together without any danger of the base falling to pieces.

Upon the base 10 I mount a cast iron frame 11 comprising a bottom portion 12, legs 13 and a table portion 14. On the bottom portion 12 is a slow speed electric motor 15 connected by a belt 16 to a roller 17 or a pulley connected thereto, the shaft 18 of the pulley and roller being journalled in a pair of brackets 19 attached to the legs 13.

A pair of glass brackets 20 support shaft 21 and 22 supporting rollers 23 and 24. The brackets 20 are attached to the table 14. A pair of brackets 26 also attached to the table 14 support a shaft 27 which supports a roller 28. A rubber conveyor belt 29 passes around the rollers 17, 23, 24 and 28 as shown. At the front of the machine is an upstanding bracket 31 holding a hopper 32 which has a large opening 33 at the top and a small opening 34 at the bottom which will direct fur onto the moving belt 29 which moves in the direction of the arrow.

I provide an angle bracket 36 on the right-hand end of the base 11 which supports a motor 38. Supported by the table 14 are a pair of glass plates 37. These glass plates 37 like the brackets 20 have insulated metal bearings, not shown, supporting a shaft 39 upon which is mounted a picker or wind roller 40 having the usual projections 41. This picker or wind roller 40 is made of metal and may be made of sheet metal, for example sheet aluminum so that it shall be light, and the projections 41 which extend longitudinally of the roller, as usual, may be made of sheet material or made solid, as desired. A rubber belt 42 connects a pulley on the motor 38 with a pulley attached to the picker or wind roller 40 and thus the picker or wind roller 40 is rotated at a high speed.

I provide still another base 43 which may be made of porcelain segments laid together, the entire base constituting an annulus. I provide still another base comprising a pair of integral porcelain cylindrical pieces 45 and 47 one above the other. These may be dovetailed together if desired. Supported by the base 45 is a wire screen 50 constituting a Faraday cage. This has a door 51 for access to the interior thereof. On top of the upper porcelain cylinder 47 is a cylindrical piece of porcelain 52 of the shape indicated. Supported by the porcelain 52 is a metal bearing 53 which journals a vertical shaft 54. A shoulder 55 on the shaft constitutes a thrust bearing. A disk-like plate 56 is connected to the shaft 54 and supports a skeleton cone supporter 57. A removable cone 58 of the shape now well known for the formation of hat bats is mounted on the support 57. The cone 58, how-

[fol. 730]

over, is preferably smaller than the cones now in use.

Supported by the porcelain 52 is a metal cylinder 60 having a hooded or curved top portion 61 with a front opening 62. A door 63 is provided in the side of the metal cylinder 60.

I provide a motor 70 on the armature shaft of which is a worm 72 meshing with a worm wheel 73. The worm wheel is fastened to a shaft 74 journalled in bearing brackets 75 and 76 which may be attached to the floor. The shaft 74 extends through the base wall 46 where there is a coupling 77 connecting the shaft 74 with a glass rod or shaft 78. The glass rod 78 extends through an opening in the lower porcelain cylinder base member 47 to a coupling 80 which connects the glass shaft 78 to a short shaft 81 on which is mounted a bevel gear 82. The short shaft 81 is journalled in a journal 83 mounted in an opening in the porcelain 47. The bevel gear 82 meshes with a bevel gear 85 which is mounted on the lower end of the shaft 84. Thus when the motor 70 is energized the disk 86 is rotated at a slow rate of speed and thereby the cone 88 is also rotated. The cone 88 preferably has not the usual perforations. The Faraday cage 89 is preferably grounded as diagrammatically indicated in Figure 1.

As will be explained more in detail hereinafter, the cone 88 is charged with electricity and so also is the cylinder 60 and the picker or wind roller 48. Other parts of the machine are insulated. The charge on the picker or wind roller 48 is the same as that on the cylinder 60 and is opposite to the charge on the cone 88. The potential used is or may be around forty thousand volts but I do not desire to be limited to any particular potential. Preferably a potential of five thousand volts and up will be employed and desirably something under one hundred and fifty thousand volts will be employed.

In the manufacture of hats according to the present invention any usual or known fur may be employed. Many hats have been made out of wool and this may also be used in accordance with the present invention. Assuming, for example, that rabbit's fur is used, of the variety well known as B. C. B., this is carroted by the fur cutter in any usual or preferred manner, for example with the use of the carrot patented to Warren C. Mercier consisting of mercury nitrate with an excess of nitric acid and hydrogen peroxide. This carroting operation makes the fur to a limited extent conductive which contributes to the deposit of fur electrostatically according to the present invention. The pelts are then taken to the cutting machine and the fleeces cut therefrom. After that the usual blowing operation may be resorted to to separate the dirt and segregate the fur from the hairs. At that stage the fur may be used pure or filler fur may be introduced in any given amount if desired. Fur carroted as indicated will take a considerable amount of filler fur and the use of the apparatus and method of the present invention also renders it possible to use a large amount of filler fur so that I may use fifty per cent or even more of filler fur if desired according to the present invention.

The fur is fed by the operator into the hopper 35 in any usual or known manner. Mechanical feeders already known may be used if desired; or the operator may merely place the fur upon the traveling belt 36. In any of these cases fur is delivered in regular or irregular amounts to the revolving picker and wind roller 48. Desirably, for the formation of a given hat bat, a weighed amount of fur will be used.

The wind roller or picker 48 operates in the manner already known to throw the fur into the air and forwardly in the form of a cloud or storm of fur. The fur is directed to the opening 62 in the hood 61 of the cylinder 60 of the forming machine. The storm or cloud of fur is charged electrically by the metal picker or wind roller 48 with electricity of a given charge. However the entire cylinder 60 and hood 61 is metallic and is charged with the same charge. The fur is therefore repelled from the walls of the hood 61 and from the walls of the cylinder 60. As it descends in the cylinder 60, which it will do by reason of gravity, it is attracted to the cone 88. Accordingly the entire charge of fur, or substantially the entire charge of fur, is deposited upon the cone 88.

An outstanding difference between the manner of depositing fur upon the cone 88 according to the present invention and according to prior machines which use suction to deposit the fur, is that the fur particles are deposited, according to the present invention, normal to the surface of the cone 88. That is to say, considering any very small area of the surface of the cone 88 as a plane, the fur particles stand perpendicular to the surface; stating this in another way, the fur particles stand radial to the circle of the cone and stand perpendicular to elements of the cone. The top of the cone is not a geometrical cone but is more or less spherical. The fur particles on this portion of the cone 88 stand radial to the sphere.

Furthermore the individual fur particles are evenly spaced upon the cone 88 by reason of the fact that like charges of electricity repel each other and the fur particles as they approached the cone 88 were charged with like charges.

Considering now the electrical diagram of Figure 2, I provide any suitable source of alternating current in power lines 90 and 91. For example 550 volts commercial current may be used, selecting one phase of the three phase current. I provide a switch 92 and a transformer 93 the primary of which is connected to the lines 90 and 91.

The secondary of the transformer 93 is connected to rectifiers 96 and 97. The rectifiers are connected to lines 98 and 99. Lines 98 and 99 are connected by a condenser 100 and a switch 101. Line 99 is connected by a conductor 102 and brush 103 to the coupling 80 which, through the shaft 81 bevel gears 82 and 85 and shaft 84 is electrically connected to the disk 86 and the cone 88. Line 98 is connected by a conductor 105 to the picker or wind roller 48. Line 98 is connected by a conductor 106 to the hood 61.

The lines 98 and 99 may be supported by heavy porcelain insulators 110 and hangers 111 from the ceiling. The cone support 87 is well insulated from the cylinder 60 and the picker or wind roller 48 is well insulated from all parts of the apparatus. The various driving connections are well insulated so that charges of very high voltage can be imparted to the picker or wind roller 48, the hood 61 and cylinder 60, and the cone 88 as described.

A given grade and quantity of fur for the manufacture of hats having been provided, the operator places a weighed amount thereof in the hopper 35 or upon the belt 36. As previously stated, a feeding mechanism may also be employed. The fur is delivered by the belt 36 to

the revolving pick- and wind roller 46. The latter is charged with electricity and imparts a charge to the fur as the fur is blown upwardly in the trajectory entering the hood 61. With the use of mercury nitrate carrot, which has been commonly used in the hatting industry, or with the use of the Mercier carrot heretofore mentioned, a deposit of mercury is left in the fur particles. This makes them to a limited extent conductive and permits the imparting of a charge to them.

As the fur descends in the hood 61 and cylinder 60 it is repelled from the walls thereof and it is attracted to the cone 58. The fur is deposited upon the cone 58 but stands perpendicular thereto.

When the fur has become deposited upon the cone 58 the operator opens the switch 97 and closes the switch 101. The fur will not drop off the cone 58 when the switch 97 is opened because the cone is always wet from the continued application to it of wet cloths and immersion in water when it is on the sinking kettle. The latter will be done carefully because of the charge collected by the condenser 100. When the various parts of the apparatus have thus been discharged, the operator opens the doors 51 and 63 and places a wet cloth upon the cone 58 in the usual manner. He then places a second cone upon the cloth covering the cone 58 and transfers both of them to a sinking kettle in the usual manner. The cones may then be removed from the water and the hat bat taken off the cone 58 and then hardened, started and sized.

An outstanding characteristic of hat bats produced according to the present invention is that the fur is much more densely packed. I have observed that in the sizing of hats, statistically speaking, the fur fibres move outwardly. Since in the normal operation of making a hat the hat bat is a very tenuous body of large dimensions and the final hat body is a densely felted article quite thick but much smaller in area than the hat bat, it must be concluded that the fur, statistically speaking, moves outwardly; a mere interchange of fur fibres in the plane of the hat bat or hat body will not cause shrinking and sizing. By starting with a hat bat the fibres of which have been laid normal to the surface of the cone a much denser packing of the fur is achieved. It will be understood that the winding of the usual cloth over the deposited fur on the cone 58 will temporarily alter the position of the fibres normal to the cone but they are simply kept over and can more readily assume their given position. Furthermore the interfelting will leave them in all and sundry positions. Nevertheless the majority of the fibers are already started on the sizing or felting operation and therefore there is less sizing of the hat bat to be performed in the subsequent sizing operation and the hat bat is denser than previously known hat bats. This enables me to use a smaller cone 58 than has heretofore been used for a given size of hat. It also tends to standardize the amount of sizing or shrinking.

Referring now to Figure 3, a specially shaped "cone" 120 is therein shown more in the shape of a finished hat than the usual cone now provided. By reason of making a dense deposit of fur partially oriented in the formation of the bat and by reason of the lesser amount of shrinking in manufacturing hats according to my invention I can use a cone which is nearer to the final shape of the hat than has heretofore been used. Thereby the manufacture of hats is simplified.

The provision of the Faraday cage 58 is to provide an effective shield against a discharge of electricity from the cylinder 60 on to the operator and otherwise as a protection. In the foregoing description I have used the term "bat" accurately I believe to refer to the body formed by deposit of fur upon a cone and prior to the time when the shrinking is "started"; that is prior to the "starting operation." However the term "hat bat" and the term "hat body" should be interpreted broadly in the claims since the one proceeds out of the other.

It will thus be seen that there has been provided by this invention an article, a method and an apparatus in which the various objects hereinabove set forth together with many thoroughly practical advantages are successfully achieved. As many possible embodiments may be made of the above invention and as many changes might be made in the embodiment above set forth, it is to be understood that all matter hereinbefore set forth, or shown in the accompanying drawing, is to be interpreted as illustrative and not in a limiting sense.

I claim:

1. Method for forming hat bats by projecting fur in a storm from a wind roller to a forming cone which consists in establishing an electric field of high intensity between the wind roller and the forming cone.

2. Method according to claim 1 in which a given charge is impressed on the wind roller and an opposite charge upon the forming cone.

3. Method according to claim 1 in which a container is provided for the cone, a given charge is imparted to the container and the wind roller and an opposite charge is imparted to the forming cone.

4. Apparatus for forming hat bats comprising a forming cone, means to rotate said forming cone, means for delivering particles of fur above said forming cone, and means for creating an electrical field of high intensity having a total voltage difference of at least five thousand volts between said means for delivering fur and said forming cone whereby the fur is electrically directed to the forming cone and deposited thereon.

5. Apparatus for forming hat bats comprising a forming cone, means rotatably supporting said forming cone, insulating means for said forming cone, means to rotate said forming cone, a cylinder surrounding said forming cone, a picker roll positioned to direct fur into said cylinder, and means for creating an electrical field of at least five thousand volts potential difference between said picker and said forming cone.

6. Apparatus as claimed in claim 5 including also a Faraday cage around said cylinder and said forming cone for the protection of the operator.

GEORGE CROMPTON, Jr.

[fol. 732]

July 8, 1941. R. P. CARLTON ET AL 2,248,064

COATING, PARTICULARLY FOR MANUFACTURE OF ABRASIVES

Original Filed June 1, 1933 5 Sheets-Sheet 1

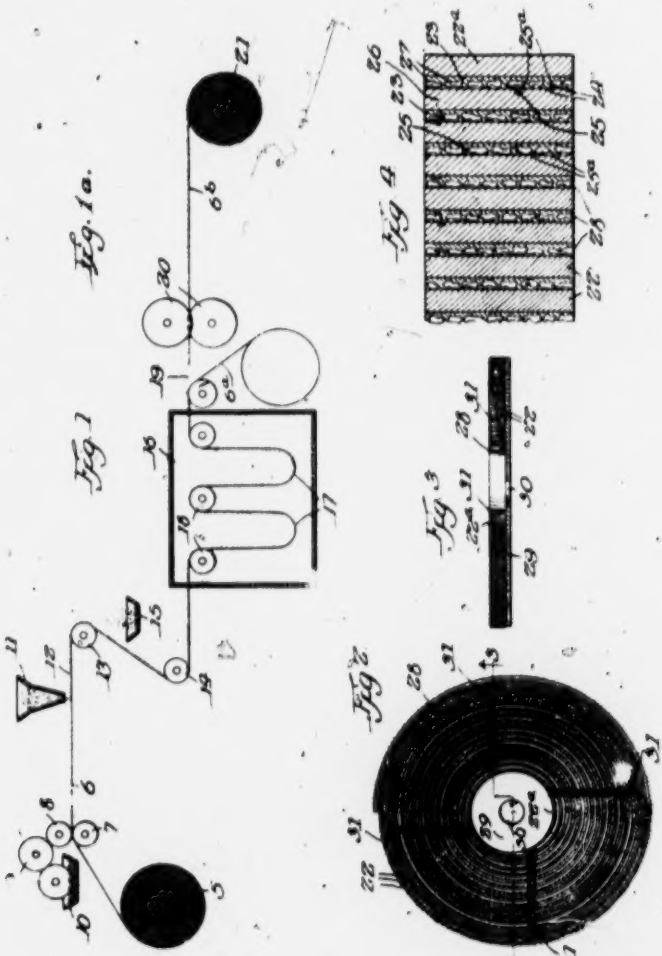

Witness:
R. B. Davison

Inventors:
Richard Paul Carlton &
Theodore Joseph Miller
By Paul Carlton
Atty

July 8, 1941. R. P. CARLTON ET AL. 2,248,064

COATING, PARTICULARLY FOR MANUFACTURE OF ABRASIVES

Original Filed June 1, 1933 5 Sheets-Sheet 2

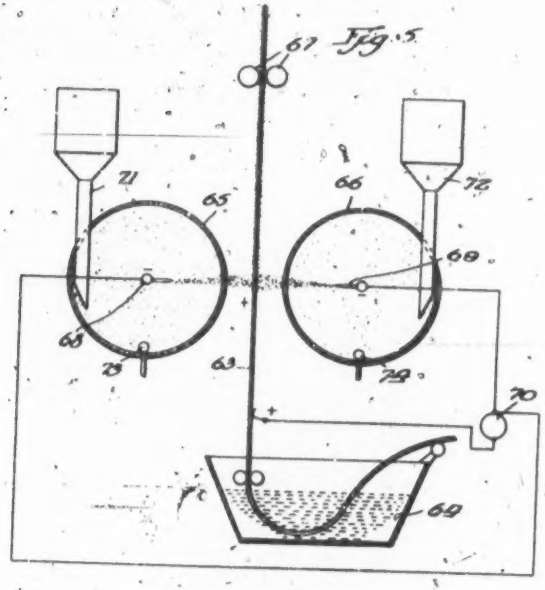

Fig. 5

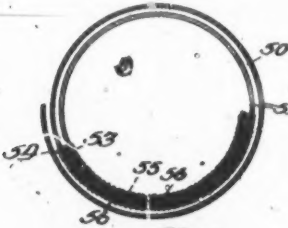

Fig. 6

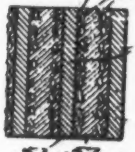

Fig. 7

Witness
R. B. Davison

Inventors
Richard Paul Carlton,
Theodore Joseph Miller
By Paul Carpenter
Atty

[fol. 734]

July 8, 1941. R. P. CARLTON ET AL 2,248,064

COATING, PARTICULARLY FOR MANUFACTURE OF ABRASIVES

Original Filed June 1, 1933 5 Sheets-Sheet 3

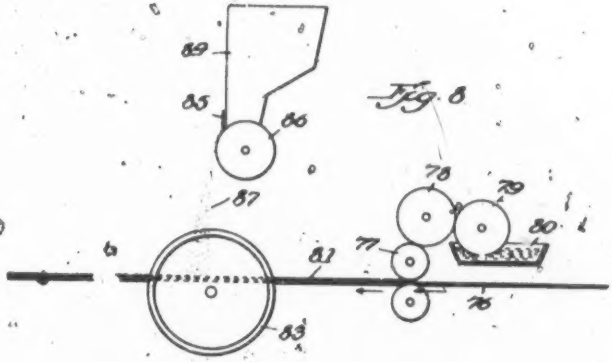

Fig. 8

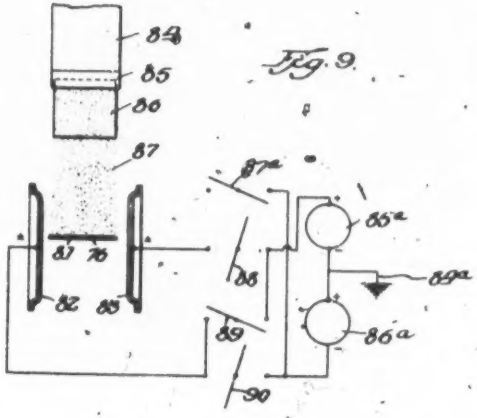

Fig. 9

Witness:
R. B. Davison

Inventors:
Richard Paul Carlton,
Theodore Joseph Miller
By James Carpenter
Atty.

732

[fol. 735]

July 8, 1941. R. P. CARLTON ET AL 2,248,064

COATING, PARTICULARLY FOR MANUFACTURE OF ABRASIVES

Original Filed June 1, 1933 5 Sheets-Sheet 4

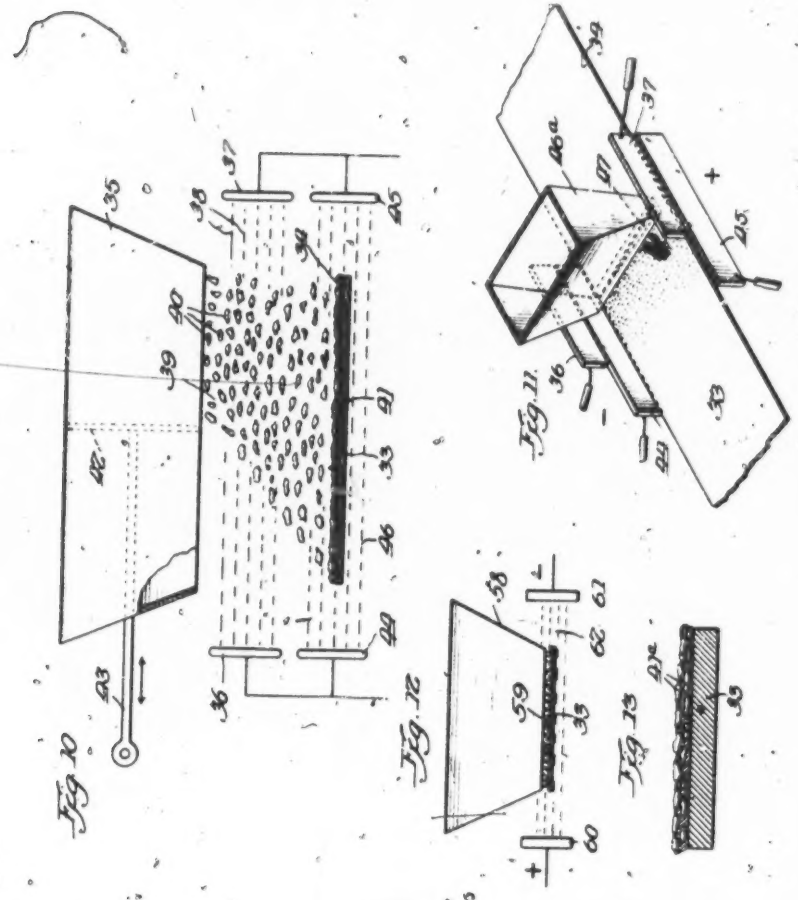

Witness:

Inventors:
Richard Paul Carlton &
Theodore Joseph Miller
By: Paul Carpenter
Atty.

[fol. 736]

July 8, 1941. R. P. CARLTON ET AL. 2,248,064

COATING, PARTICULARLY FOR MANUFACTURE OF ABRASIVES

Original Filed June 1, 1933 5 Sheets-Sheet 5

Fig. 14

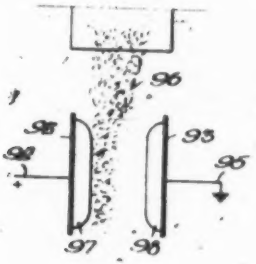

Fig. 15

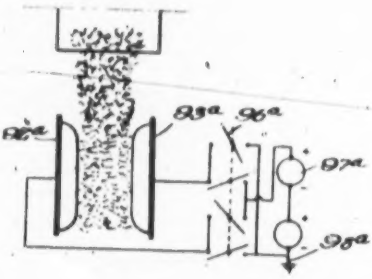

Fig. 16

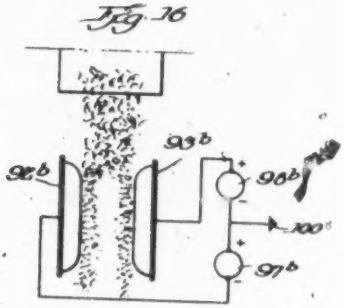

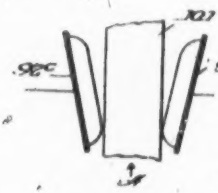

Fig. 17

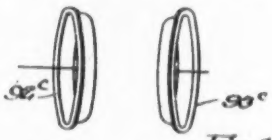

Fig. 17a

Fig. 18.

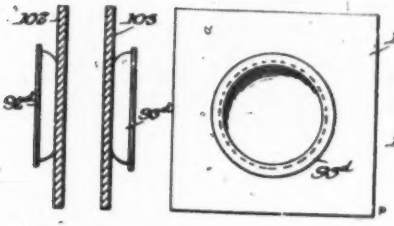

Fig. 18a

Fig. 19

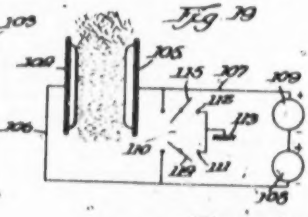

Witness:

Inventors:
Richard Paul Carlton
Theodore Joseph Miller
By
Attorney

[fol. 737]

Patented July 8, 1941

2,248,064

UNITED STATES PATENT OFFICE

2,248,064

COATING, PARTICULARLY FOR MANUFACTURE OF ABRASIVES

Richard Paul Carlton and Theodore Joseph Miller, St. Paul, Minn., assignors to Minnesota Mining & Manufacturing Company, St. Paul, Minn., a corporation of Delaware.

Application June 1, 1932, Serial No. 612,526
Renewed March 21, 1936

10 Claims. (Cl. 51—192)

This invention relates broadly to coating and coating materials especially in sheet form, such as in the manufacture of abrasives, and the present invention among other things finds utility in one of its phases in the manufacture of abrasive wheels or discs, and while the invention in one of its forms is illustrated as adapted for coating and forming an abrasive disc, it will be understood that certain other phases of the invention are of quite general application and may be adapted for other purposes, such, for example, as a method of coating roofing material with pulverulent mineral.

This invention, as will hereinafter appear, finds especial utility in the production of grinding discs wherein the abrading surface is on a side thereof rather than on the periphery; and the invention also finds utility in coating roofing material so that particles of mineral deposited thereon are caused to lie flat, that is to say, with their major dimensions substantially parallel with the surface of the backing.

The customary procedure generally resorted to in the manufacture of abrasive wheels, discs and the like generally includes the mixing of an abrasive grit, such as aluminum oxide, silicon carbide or emery, with a suitable bonding material and then placing the mixture in a mold. The final setting up of the bonding material is then effected by curing at a sufficient temperature to cause the bond to flow and take a firm grip of the abrasive grit. Several different forms of the adhesive or bonding material are used, the more common being that known as a vitrified or ceramic bond. In making such a wheel it is necessary to fire the wheel, that is to say, subject the mixture of bonding material and grit to a sufficiently high temperature to cause the bonding material to flow and thus, in effect, form a porcelain bond between the various particles of grit. Obviously, such a wheel or disc is inflexible, broadly, and will not stand shock or sudden thrusts.

It has been proposed to employ as substitute bonds for the vitrified or ceramic bond, materials such as rubber, shellac, sodium silicate, natural and synthetic resins and the like.

In producing an abrasive disc or wheel, aside from the problems of choice of bond, there is also the necessity of controlling the ratio of bonding material to abrasive material, and it is also highly desirable that, in certain forms of the abrasive wheel or disc structure, more or less porosity or voids in the wheel acting as clearances for the material being abraded be provided so that fast and continuous cutting, together with reduction in temperature of the wheel when engaging the work, should be attained. In obtaining these desiderata it is found that the porosity of the wheel in the case of a molded structure tends to weaken the disc or wheel and, due to the porosity, the structure does not have sufficient bond to firmly anchor the grit therein.

The principal objects and advantages of the present invention reside in the provision of an improved method of manufacturing an abrasive wheel, disc or the like having characteristics in its structure which increase the cutting ability, strength and durability of the device; the provision of an improved method of manufacturing an abrasive article such as a wheel or disc for abrading purposes, in which the cost of manufacture is considerably reduced, with the attendant accomplishment of the desired control of ratio or bond, that is to say, adhesive, to the mineral or grit, and to provide such an improved method in which the same may be carried out as a substantially continuous process, thus simplifying the manufacture and reducing the ultimate cost; the provision of an improved method of manufacturing abrasive wheels and discs in which a fabric such as paper, cloth or the like may be employed as a carrier for the bond and grit and in which the ultimate size of the abrading wheel or disc may be determined easily and by a substantially continuous method; the provision of an improved form of abrading wheel or disc wherein a controlled porosity of the structure is obtained and wherein the ratio of adhesive material to grit is substantially uniform throughout the entire wheel or disc; the provision of an improved abrasive article such as a wheel or disc wherein the grit particles are oriented so that their most effective cutting edges are presented at the abrading surface and thus are brought into contact with the work more efficiently; the provision of an improved method of manufacturing abrasive discs, wheels and the like in which the production of the abrasive article may be carried out on existing sandpaper type of equipment, with the subsequent convenience of shortening the required time for producing various sizes of abrasive wheels and discs.

A further advantage of this invention resides in that, as distinguished from the molding process of making abrasive discs and wheels, which requires that the abrasive grit and bonding material be mixed in the proper ratio, then molded, then heated, and therefore requiring each separate size of wheel or batch to be handled completely individually from the beginning to the end of the

entire fabrication process, the present invention permits of the carrying out of a substantially continuous process similar to the manufacture of sandpaper and that continuous lengths of the material may be stored in drums or rolls from which the desired width of strip may be cut which is to determine the ultimate thickness of the wheel, it being assured at all times that the ratio of abrasive material to bonding material will remain substantially uniform throughout the particular wheel or disc structure which it is desired to form.

The present invention also permits of the manufacture of the basic abrasive material on standard sandpaper equipment and that this material may, after having been prepared, be preserved in stabilized form for use in manufacturing wheels as desired, the process and the article thus permitting of the production of one or more wheels of a desired size and texture, that is to say, grit size or number, at less cost and more conveniently than is possible with the previous processes known to us.

It has also been suggested in the prior art that abrasive discs and wheels be made up of a series of superposed discs of ordinary sandpaper, emery paper or cloth or the like glued together and subjected to pressure and heat, but in such prior process and articles made therefrom known to me considerable waste occurs in that the discs must be cut from a standard made piece of sandpaper, and the portion thus made and not used must be thrown away. The present invention distinguishes from such process in that there is substantially no waste of abrasive material which is attendant upon any dising out process, hitherto suggested.

The present invention also has as one of its objects the provision of an improved method of producing a flexible abrasive article and the resultant article so that, as desired, the manufacturer may produce an abrasive article of the desider degree of flexibility, and, at the same time, have a substantially homogeneous structure with a substantially continuous abrading surface.

The present invention also contemplates the employment therein and for the production of the abrasive article of a new process of orienting the abrasive grains so that their sharper points will be presented at the abrading surface. In ordinary sandpaper the abrasive grains are deposited on the adhesive coated sheet by gravity and as a result lie in haphazard fashion in the adhesive.

In the present invention it is desirable that the abrasive grains be oriented so as to present the longitudinal axes of the individual particles in a position substantially parallel with the plane of the sheet and substantially perpendicular to the margins thereof so that when the abrasive article is formed from a sheet of abrasive material made according to this invention, to form an abrasive disc, the sharper points of the grains will be presented at the margins at each of the convolutions of the disc.

This orientation of the grains may be conveniently accomplished by the action of an electrical field, and it is therefore one of the further objects of this invention to provide an improved method of and apparatus for subjecting the abrasive grains to the action of an electrical field for the purpose of attaining the desired orientation of such particles; the invention further has as one of its objects the improved method of and apparatus for subjecting the abrasive grains during the flight by gravity to the sheet to the effect of an electrical field, preferably of the electrostatic type, for aligning the particles with the lines of force of the field, which for convenience lie substantially parallel with the surface of the abrasive sheet, thus orienting the grains in the proper desired manner as they are deposited thereon.

This invention also contemplates the improved method of incorporating the grit particles in an adhesive in plastic form, and while the same is deposited together with the grit on a flexible backing subjecting the incorporated grit and adhesive to the action of an electrical field for aligning the particles and orienting the same in the desired manner.

The method involved in the present invention may be carried out in a number of alternative steps, depending upon the form and characteristics as to flexibility and denseness which it is desired to impart to the finished article.

A preferred method of producing the abrasive article of this invention includes the selection of a fabric, preferably paper, of a desired and suitable weight, coating this paper with a bonding material and a suitable grit. For our purposes we prefer to employ a waterproof bond, and, for example, this may be any of the bonds described and claimed in the patents to Okie 1,565,027, 1,565,028, 1,636,801, Carlton 1,775,631, 1,736,964.

This paper thus coated with a waterproof bond and a suitable grit may be of the same characteristics as the waterproof sandpaper now known to the trade as "Wetordry."

The coated fabric, preferably paper, having the grit contained in the adhesive layer may be provided with a light or heavy sizing coat, depending on the use to which the material is to be applied, though in most instances a sizing coat may be omitted.

After the bond and adhesive or grit have been applied, the material is then festooned for a sufficient period of time to dry or partially solidify the adhesive. It is preferable that the adhesive be not set to its final condition at this time but to aid in handling the adhesive should be dried to a degree which will prevent accidental displacement of the grit.

The abrasive sheet thus formed may be rolled into what are known as Jumbo rolls and may be stored until required for slitting into suitable widths. When it is desired to complete a grinding disc with this material the same may be slit to any desired width which is to be the depth of the disc or wheel and then wound into rolls of the required diameter. Owing to the fact that the adhesive material is not entirely set when the sheet is wound into a roll, the disc or wheel thus formed may be placed in an oven for further drying and for completely setting up the bond.

By regulating the tension of the strip of abrasive material as it is wound into disc-like form the compactness and resultant flexibility of the final product may be desirably controlled.

It will be understood, of course, that the resultant flexibility of the article is more or less dependent upon the type of adhesive employed, and that by controlling the flexibility of the adhesive and the tension upon winding the ultimate flexibility of the article may be regulated. As to the waterproof qualities of the article, excellent results may be obtained by employing any of the binders disclosed in the patents mentioned herein.

In the actual finished disc material thus produced particularly where the strip of adhesive

material is relatively loosely wound to form a disc, the convolutions thereof will afford clearance spaces, though they may at numerous points be adhering together by virtue of the adjacent layers of the adhesive. In the actual finished article we thus are able to produce an abrading surface which has sufficient flexibility as to binder and composite to facilitate surface sanding, as it is called, and also to facilitate clearing of the wheel when it is in use.

We have found that in some cases of flexible discs or wheels it may be desirable to cement the layers or convolutions of the disc together, but this is not the preferred practice for the normal surface sanding job, and we have found that for such purposes merely winding the strip of material upon itself and then attaching it to a suitable backing, preferably flexible in nature, will produce a grinding wheel or disc giving a desirable flexibility and an efficient cutting surface.

In instances where it is desired to make a solid wheel, that is, a relatively inflexible wheel or disc, it may be desirable to cement the laminations, layers or convolutions, as they may be termed, and this may be accomplished by interposing a sizing coat as the strip is wound into the disc form. It also may be desirable in some instances to apply the sizing material in a relatively heavy coating and to subject the article to heat for causing the coating to flow, and thus relatively intimately connect adjacent layers of the abrasive material.

This operation may also be accomplished when the disc is wound by immersing the same in a bath of adhesive size to permit the adhesive material to flow by capillary action between the laminations or convolutions of the disc.

One of the important factors which effect flexibility when the disc is not of the solid type is the degree of tightness of winding, and thus by relatively loosely winding the strip of adhesive material it is possible ultimately to obtain a very flexible abrasive disc.

It is important in the production of a grinding or polishing disc or wheel of the character herein disclosed that the ratio of mineral grit to adhesive be controlled to produce the most desirable coating results and also that the uniformity of this ratio throughout the disc be maintained. By the abrasive article of this invention and the method of manufacturing the same, we are enabled to attain a high degree of efficiency in cutting operations of the disc and to give to the abrasive article a substantially uniform effective abrasive surface throughout, so that as the same becomes worn in service it yet renders the same efficient cutting and/or abrading or polishing functions.

It will be understood, of course that dependent upon the desired characteristics of the finished product, we may employ fine, medium or coarse grits and that, correspondingly, the thickness of paper and other fabric employed and the ratio of adhesive to grit or abrasive particles must be controlled in each instance to the desired degree. In certain instances we applied the adhesive and abrasive coatings to both sides of the backing.

In selecting an adhesive material, we have obtained excellent results with adhesives formed as composite materials from Bakelite, that is, phenol and formaldehyde and other synthetic resin binders, rubber, shellac and the like, it being understood that these materials may be made into a liquid adhesive and can be further molded or softened by subsequent flowing under heat in such manner that a thorough setting or curing of the adhesive is accomplished without detracting from the flexibility thereof.

One example of an adhesive which is suitable for our purpose is that substantially according to the following formula:

	Parts
Bakelite resin	4
Thinner (denatured alcohol)	1

This composition is agitated very thoroughly until a creamy fluid possessing some tackiness is produced. This adhesive is then applied to the sheet which then receives the abrasive material.

In the case of a Bakelite resinous material, the adhesive is dried after having received the mineral either on the racks or festoons or at some other point in the production of the abrasive strip, and we prefer to employ temperatures ranging from normal atmospheric room temperature to approximately 140 degrees Fahrenheit, depending on the length of time of drying. In this drying operation the temperature is maintained at such a point that the thinner or solvent only will be driven off and thus no appreciable hardening or solidifying reaction takes place in the resin at this time. When the strips are coated with this material together with a binder, heat treated as set out above and then wound into discs or wheels, they may be further subjected to heat which causes a flowing of the resinous binder and thus sufficiently unites the several convolutions or laminations of the wheel. Of course, if it is desired to make a substantially rigid wheel in this manner, the same may be tightly wound and also subjected to pressure as well as heat subsequently.

When employing a synthetic resinous material such as a Bakelite resin, the same is thinned with a suitable thinner and coated on the sheet in the same manner as that employed in conventionally forming sandpaper. The grit is then applied as quickly after the binder application as may be practicable. The thinners are evaporated at normal temperatures, and the bond thereupon solidifies to the consistency of a varnish partially dried but tack free.

The abrasive article in this condition may then be stored in large rolls and cut or slit into ribbon disc portions as required.

In order to insure flexibility of the abrasive article during handling, it is preferred that the rolls be stored in a humid atmosphere, so that the article will be possessed of flexibility during the heating operation.

After the abrasive material is cut and formed into ribbon discs, the bond may be toughened by further heat treatment at, say, 180 to 185 degrees Fahrenheit for approximately fifteen minutes, which produces a flexible consistency and is suitable for some purposes, or, we may employ temperatures ranging from 250 to 300 degrees Fahrenheit for a period of time of from fifteen minutes to one hour to produce a relatively hard bond in which there is substantially no flexibility in the binder coat itself. Where a flexible binding coat is desired, a proper regulation of the temperatures and employment of a suitable modifier in the Bakelite resin will give satisfactory results.

It will be understood that the preference in storing the abrasive in large rolls, jumbo rolls as they are called, is that sometimes it is difficult to synchronize the heating operation with the

[fol. 740]

737

drying festoons, and for some purposes it is preferred that the abrasive sheet as it is formed be pieced in jumbo rolls so that it may be slit to the desired widths as required.

In connection with the foregoing formula we have secured a flexible abrasive strip to be wound into a disc or wheel shape by employing a Bakelite material which does not produce a complete reaction to rigidity or by keeping the temperature below 212° F. and reducing the time of heat treatment.

For the purposes of this invention we prefer to employ a flexible binding material on the flexible backing, but it is to be understood that a satisfactory flexible wheel or disc may be produced employing a relatively less flexible binder by keeping the layers or laminations of the wheel separated.

We have made satisfactory abrasive wheels or discs by employing an adhesive of the varnish type such as is disclosed in the patents to Okie hereinabove referred to, and we have also employed as a binder the material disclosed in the application of Carlton and Oakes, S. N. 660,319.

Where rubber, shellac or synthetic resins other than Bakelite are employed, we also prefer to heat treat the same in the final setting or, if necessary, after first applying the binder to the strip which is to be later wound into the disc form. With rubber, sulphur is added in desired amount to the adhesive material so that the vulcanization of the binder takes place in the heating step.

Under some circumstances, in order to prevent starving of the bond between the grit and the sheet, it is desirable to apply sizing coat to the back of the sheet, and this may be done during the winding of the sheet or after the original process of making the sheet simultaneously with the application of the adhesive and grit.

The outstanding advantages of the present invention, particularly where the same is wound into a roll to form a disc or wheel, reside in that we are enabled to produce a laminated abrasive structure in which the abrading surface presents a more definite and more uniform porosity due to the laminations and due to the spot contacting of the adhesive on one layer with the adjacent layer, and thus producing a greater proportion of voids than is possible or obtainable where abrasive grit and a bond are molded even where equal ratios of bond to grit are employed. Our invention also produces a laminated abrasive structure having an increased strength due to the incorporation therein of the coated backing of fabric such as paper or cloth, which adds to the strength of the entire wheel making the same less brittle and more flexible and permitting of thinner wheels to be prepared than by any other prior method known to us.

Another distinct advantage of our invention resides in the fact that the mineral grits, owing to their elongated nature, may be oriented on the abrading device so that their sharp points are presented at the abrading surface. For some purposes it is desirable to deposit the abrasive grit by an electrical field or other electrical action, such as by an electrostatic field, in such a manner that the grits will become oriented with their major axes parallel to the surface of the sheet and perpendicular to the abrading surface, particularly where the grits are placed so that their major axes are perpendicular to the margins of the strip from which the wheel is wound. We shall describe such a process of deposition of the grits more fully hereinafter.

It will be understood, of course, that after the abrasive strip has been wound to the desired diameter and with the desired degree of tightness, a suitable disc backing may be affixed by a waterproof binder if desired on one surface of the resultant abrasive disc so that the disc may be mounted on a suitable shaft for imparting rotation thereto.

The several methods which may be employed in the manufacture of the abrasive article itself are illustrated in the accompanying drawings, in which—

Figure 1 is a schematic view of an apparatus which may be employed for producing the abrasive article of this invention.

Figure 1a is a schematic view of a slitting and winding apparatus which may be used with the apparatus shown in Figure 1.

Figure 2 is a plan view of an abrasive disc made according to this invention.

Figure 3 is a transverse sectional view taken on the line 3—3 of Figure 2 looking in the direction indicated by the arrows.

Figure 4 is an enlarged transverse sectional view taken on the line 3—3 of Figure 2 looking in the direction indicated by the arrows.

Figure 5 is a schematic view of apparatus for coating one or both sides of the abrasive article.

Figures 6 and 7 are fragmentary sectional views of an alternative form of an abrasive article made according to this invention.

Figure 8 is a schematic view of an alternative form of apparatus for securing orientation of the abrasive particles.

Figure 9 is a view showing the apparatus of Figure 8 from another aspect.

Figure 10 is an elevational schematic view illustrating alternative apparatus for carrying out the step of orientation of the abrasive particles.

Figure 11 is a perspective view of an alternative form of apparatus of this invention.

Figure 12 is an elevational view of a still further modified form of the invention.

Figure 13 is an enlarged sectional view of a sheet illustrating the alignment of the abrasive grains thereon.

Figures 14, 15, 16, 17, 17a, 18, 18a, and 19 are all diagrammatic views of alternative forms of the invention shown in Figures 8 and 9.

Referring now more particularly to the drawings, and first to Figure 1, there is shown a roll of fabric such as paper or cloth 6, from which the web 6 is unwound over an idler roller 7, to receive from a coating roll 9 a layer of the adhesive material delivered by the series of feed rolls 9 from a tank 10. The web 6 is fed beneath a hopper 11 from which is supplied a quantity of comminuted abrasive material 12 by gravity, which may be suitably regulated in any desired manner to determine the thickness of the grid layer. The sheet or web 6 is then trained over a roll 13 and reflexively bent upon itself by a roll 14, some of the grit in excess of that desired being removed by falling by gravity into a container 15. The web 6 with the layer of grit secured thereto by an adhesive, waterproof if desired, is then fed into a drying room or oven 16, and arranged in festoons 17 by the provision of rolls 18 in said drying room.

The temperature of the drying room is maintained at a degree which will only partially set the adhesive sufficiently to permit handling of

the abrasive coated strip or sheet indicated at 6a as it leaves the drying room. At this point Figure 1 shows the sheet as broken, indicated at 10, inasmuch as it may be desired to store the resultant product of this point before continuing the same to the slitting apparatus. However, if it is desired to have a continuous working process, then the sheet or web is supplied to slitting apparatus represented by the cutting knives 12. These knives may be arranged at any convenient distance apart, depending on the width or thickness of the strip to be cut and ultimately wound into the abrasive discs.

From the slitting apparatus the several resultant strips of abrasive sheet material may be fed to a mandrel 21, on which they may be wound into the final abrasive disc elements producing this article such as shown in Figures 2, 3 and 4.

It will be understood that while the strip shown at 6b in Figure 1 is wound with the abrasive coated side outwardly, thus leaving an outer abrasive coated surface exposed at the last convolution, the disc may be as readily wound in the opposite direction so, that the abrasive coated surface of cloth lamination will be presented inwardly. Inasmuch as these discs are intended to grind on one of their side faces, and as a substantially continuous abrasive coated surface is thus afforded, the discs may be wound either way desired.

It is also to be understood that by pinching the strip 6b under more or less tension as desired, a tighter or looser wound disc may be obtained.

When the abrasive material is deposited by gravity as shown in Figure 1, it will be understood that the abrasive grains will be largely lying haphazard on the abrasive surface, though a large number of them will be oriented so that when the strip 6b is wound into a roll to form the disc the grains will be knocked down in such a manner that their sharper points will, as the disc is employed in grinding or polishing the surface, be brought against the surface of the work. However, to insure that the majority of the grits will be so oriented, we have provided methods and apparatus for so orienting the grains which will be described more fully hereinafter.

Figures 2, 3 and 4 illustrate a disc made according to this invention, wherein the disc is composed of a plurality of convolutions 20 of abrasive coated material affording a laminated abrasive structure. The laminations are held together by the adhesive material establishing contact on one convolution with the back surface of the adjacent convolution, so that a structure somewhat similar to Figure 4 will be obtained, the innermost convolution 20a having its coating 21 of adhesive material contacting at a plurality of points, indicated at 24—24 with the back surface 22 of the immediately adjacent convolution 20. Thus the abrasive grains indicated at 27 in the layer of adhesive 23 are substantially embedded therein with their major axes and thus their sharper cutting points presented toward the margins of the laminations. In this way a substantially continuous abrading surface indicated at 28 on the surface of the disc is thus provided. It will be understood that care must be exercised that the proper weight of paper with regard to abrasive and adhesive be selected.

The disc-like structure thus provided may be secured to a flexible backing 29 of paper or cloth or other suitable material having an axial opening 30 by which the same may be attached to the rotating shaft of a grinding machine.

It will be understood that the backing 29 should be connected to the disc by a flexible waterproof adhesive similar to that employed in the disc itself, or, if desired for some purposes, the backing 29 may be of a rigid material and the disc likewise connected thereto.

In Figure 4, it will be understood, of course, that the thicknesses of the convolutions and layers of grit and adhesive have been greatly exaggerated in size, although it is conceivable that one might produce an abrasive article having convolutions whose thicknesses are as great as those shown in Figure 4. However, in the ordinary form of the invention for employment in standard surface grinding the disc is made up of a sheet not substantially greater in thickness than a sheet of ordinary sandpaper, thus leading to the final product a desired degree of flexibility.

It will be observed that in some instances it may be desirable to provide grooves in the abrasive surface 28, these grooves being shown at 31 in Figures 2 and 3. It will also be noted that the grooves 31 are preferably of greater depth at their inner ends toward the axis of the disc than at their outer ends adjacent to the periphery of the disc. These grooves may be formed in the disc after the fabrication of the same inasmuch as forming the grooves in the strip prior to finally winding would require considerable care in aligning the notches in each convolution from which these grooves are formed.

The disc thus formed contains a number of voids which are afforded by virtue of the grit particles themselves holding the laminations apart acsdsly the vacant places indicated at 32 where the glue or other adhesive does not completely fill the spaces between the convolutions. Thus the abrasive article quickly cleans itself as it works and clogging or loading of the article is practically impossible.

We have found that a satisfactory grinding and polishing wheel may be constructed by methods disclosed herein, and in one form of the invention, which is illustrated in Figures 6 and 7, we apply a coating of adhesive material containing an abrasive to both sides of the strip forming the flexible abrasive article. This coating operation may be accomplished by the apparatus shown in Figure 5.

After making a double coated strip, it is then wound loosely into a configuration substantially like that shown in Figures 6 and 7. The thus wound material is then thoroughly cured and dried. After curing, the disc-like structure thus afforded is connected to the cloth backing in such a manner as to preserve the open or spaced convoluted structure as shown. The polishing compound, which may be according to the formula appearing below, is then forced into the spaces between the layers and when completely filled with polish the disc is then allowed to sit for sufficient time to solidify the polish here. This drying time, we find to give best results by subjecting the article to a drying temperature for approximately forty-eight hours.

A satisfactory formula which we have employed for the purpose of compounding the polishing material may be as follows:

	Grams
Nitro base thinned to 30% solids	200
Dibutyl phthalate	45
400 dc	68.5
Tripoli	102.5
Borax	11.5
Stralite	45

[fol. 742]

From the foregoing it will be observed that we produce a convoluted structure indicated generally at 58, composed of the laminations of the convolutions 51 of suitable fabric coated on both sides as indicated at 53 and 54 with adhesive 55 containing the comminuted abrasive material 56.

It will be noted that sufficient space is afforded between the layers 51 particularly as shown in Figure 7 to permit of the introduction of a comminuted polishing material indicated at 57. Thus the finished article possesses both grinding and polishing properties.

It will be understood that it is highly desirable that the comminuted abrasive material be disposed on the strip or sheet in such manner that the individual grits will have their major axes preferably lying parallel with the surface of the sheet, and, where the sheet is to be wound later to form a disc which marginally exposes an edge of the sheet for forming the abrasive surface, that the grits be perpendicular or substantially perpendicular to the longitudinal margins of the sheet.

While orientation of the grits with their major axes parallel with the surface of the sheet and substantially perpendicular to the edges thereof, may be more or less accomplished in simple gravity deposition of the grits on the adhesive coated sheet, a positive orientation of the individual grains may be accomplished by electrical action, that is to say, the grits may be deposited on the sheet in the presence of an electrical field, for example electrostatic, or if the grit particles are of a magnetically responsive nature then in the presence of an electro-magnetic field. Grits deposited in the presence of such an electrical field will be caused to align themselves with the lines of force of the electro-magnetic or electrostatic field as the case may be.

For most abrasive articles an electrostatic field will perform the function inasmuch as most of the grit particles commonly employed in the abrasive arts are of a non-magnetic character and are non-conductors and practically all will respond to the force of an electrostatic field.

Referring specifically to Figure 5, we provide a suitable backing for carrier strip 63 which receives coats of adhesive material on both sides thereof from a suitable tank 64, the strip being conducted upwardly between two chambers 65 and 66 and then conducted through edge guide rollers 67.

In the chambers 65 and 66 there are provided electrodes 68 and 69 of preferably negative polarity, the sheet being itself of a conductive nature and connected to the positive side of a source of electric motive force indicated at 70.

The apparatus receives grit from hoppers 71 and 72 which is agitated in the form of clouds within the chambers 65 and 66 by air blasts introduced at the nozzles 73 and 74.

The apparatus shown in Figure 5 is similar to that shown in the patent to Smyser 1,708,000, and serves to illustrate one apparatus for carrying out the double coating simultaneously. This form of the apparatus does not, however, produce orientation of the grit particles with their major axes parallel to the plane of the sheet, and reference will be made hereinafter to forms of the invention including apparatus for this purpose.

It will be understood that the sheet may be coated on both sides by running it twice through either a gravity coating apparatus or any of the apparatus shown in the other figures of the drawings.

As herein pointed out, it is desirable to orient the grit particles so that they will lie with their major axes substantially parallel to the surface to be coated, and they will thus present their sharp points at the edges of the strip as the same becomes worn in use as an abrading disc.

This orientation of the particles uniformly on the sheet is also of utility in the manufacture of mineral coated shingles wherein it is desirable that the particles of mineral, granules or the like, be deposited so that a minimum number of the mineral granules is required to cover a given area of the asphaltum sheet or other material from which the carrier or backing of the shingle is made.

We have illustrated herein a number of ways in which this may be accomplished which are all included in the disclosures of Figures 8 to 12, both inclusive, and Figures 14 to 18, both inclusive.

With reference first to Figures 8 and 9, we have employed a backing 76, of suitable material which receives a coating on the upper surface of the horizontal flight thereof shown in Figure 8, this coating being applied from a set of adhesive distributing or applying rollers 77, 78 and 79, the latter taking up adhesive from a tank 80. This adhesive layer is indicated at 81 and the backing is then propelled to the left as viewed in Figure 8 between electrodes forming an electrostatic field.

These electrodes, we have found, may conveniently comprise a pair of circular disc-like plates 82 and 83, between which the horizontal flight of paper 76 passes at desired rate of speed. Other forms of the plate electrodes may be employed, but we have found that this type produces a uniform field and highly satisfactory performance.

Above the flight 76, and at a distance sufficiently remote from the electrodes so as to be substantially unaffected thereby, we provide a hopper 84, which may contain abrasive grains of the desired size. We find that for our apparatus an abrasive grain or pulvule of a silvery character that is somewhat elongated, will give highly desirable results as to orientation, though it will be understood that it is not necessary that this type of pulverulent material be employed in order to attain the results of this invention. Practically all of the grits employed in the abrasive industry to-day are characterized by having a major and a minor axis so that they become responsive to the action of an electrical field when introduced into the presence of the same.

These grits are deposited by gravity from a hopper 84 having a suitable controlling gate 85 over a distributing roller 86 so that they fall in a substantially continuous stream 87 toward the adhesive surface 81, passing between the electrodes 82 and 83 in their path to the adhesive surface.

We have discovered that a static electrical field solely, that is to say, without outside influence, mechanical or otherwise, acting upon the grit particles, tends to deflect them toward one of the plates, and in order to correct this and produce a more uniform distribution and yet obtain orientation, we employ a pole changer, diagrammatically illustrated in Figure 9, through which the two electrodes 82 are connected to the source of electrical difference of potential.

A source of electromotive force, preferably of relatively high voltage, is provided. The voltage employed in one arrangement of the electrodes was about 165 kilovolts and in employing this voltage the plates or electrodes were spaced about 5.5 inches apart in air. This arrangement served to maintain a constant electrical potential gradient of approximately 19 kilovolts per inch between the electrodes.

In correcting for uneven distribution, one side of the source of difference of potential is grounded as indicated at 36c in Figure 9, and the source comprised of two units 36a and 36b is so connected through pole changing switches 37a, 38, 39 and 40 that the relative polarity of the two plates 32 and 33 forming the electrostatic field was changed at a desired frequency.

We have found that, for our purposes, with the plates spaced between 5 and 6 inches apart in air, the best results are obtained by the use of electrical potential gradients of the range of from 17 to 20 k. v. per inch. We also find that where reversal of polarity is resorted to, as in the disclosure in Figure 9, the optimum of frequency of polarity change or reversal should be in the vicinity of two cycles per second. However, we have found that ranges of from one cycle per second to four cycles per second produce satisfactory results and that little change was noted in thereby producing satisfactory distribution and orientation of grit particles on the sheet.

It will be understood that the foregoing disclosure of values as to voltages, rates of polarity change, and size of and distance between the plates is all subject to variation to suit the particular conditions and results to be attained thereby.

We have also found that with different types of abrasive grains different results were obtained. For example, with silicon carbide in some arrangements of the plates compensation had to be made for difficulty encountered due to the high conductivity of silicon carbide, whereas with certain other grit particles these difficulties were not found present, such, for example, as in the use of flint.

From the foregoing it will be understood that the electrostatic field established either constantly or intermittently together with reversal of polarity between the plates 32 and 33 affects the grit particles, as they enter the electrical field, to bring them into axial alignment with the lines of force of this field. No appreciable difficulty is found to exist by the presence of the backing material 76 in the field, which would ordinarily be assumed to occur due to the setting up of extraneous electrostatic fields between the two electrodes and the backing itself, this difficulty being eliminated by the form of the electrodes, so that the major value and resultant force of the electrical field is retained.

In the more convenient form of the invention shown in Figure 9, successful results will be obtained by employing disc-like electrodes 32 and 33 of a diameter of about 8 inches, and with the opposed faces of the electrodes substantially parallel to each other.

A further form of apparatus which we may employ for carrying out this method of deposition is illustrated in Figure 10 wherein the strip, sheet or web of Figure 1 is indicated at 23, the one side of said sheet being provided with a layer 24 of adhesive material, preferably waterproof in its characteristics, though, as will be obvious, this layer of adhesive may be of the ordinary glue head type employed in the sandpaper industry for non-waterproof abrasive articles.

The sheet 23 is caused to travel in a substantially horizontal plane below a hopper 38 and between the electrodes 32 and 33 on an electrical field, the electrodes 32 and 33 being connected to an appropriate source of electrical potential of the required value. In actual practice what are known as high voltages may be required, though it will be understood that the difference of potential to be employed is subject to variation as desired for accomplishing the ultimately desired action.

For the purpose of the present disclosure the electrodes 32 and 33 form part of an electrostatic field, that is to say, a field in which a constant stress is set up but in which relatively small currents flow. Such an electrical field will be established between the electrodes 32 and 33 indicated generally by the lines of force 35. This field is set up between the electrodes 32 and 33 above the sheet 23 and below the hopper 38, and the field strength is regulated to such an extent as to act upon the abrasive particles as they are fed from the hopper 38.

The abrasive particles are shown as a cloud 39 but some of them are shown enlarged at 40 depicting the approximate positions which they assume as they fall by gravity through the electrostatic field. It will be understood that should the electrostatic field be of great enough strength, the particles issuing from the right hand end as shown in Figure 10, would be caused to orient themselves with their major axes parallel with the lines of force of the electrostatic field and be projected by that field from one of the electrodes toward the other thereof. Therefore, by regulating the electrostatic field to the desired optimum the particles will be caused merely to flatten out, and while they may, [illegible] circumstances be caused to travel [illegible] force of the field, the force [illegible] overcome their flight [illegible] charged electrode and they will fall upon the layer of adhesive, assuming positions substantially as shown in Figure 10, and indicated at 41. This orientation is more uniformly accomplished, however, in the form of the apparatus shown in Figures 8 and 9.

Inasmuch as the particles of abrasive material as they leave the hopper adjacent to the electrode 38, may in a large number of instances never reach the sheet, due to their attraction to the other electrode, we provide a movable partition 42 in the hopper, which may be adjusted transversely of the longitudinal axis of the sheet so that sand or other grit particles issuing from the hopper can be caused to issue in larger quantities from one end than from the other. A suitable handle properly insulated indicated at 43 may be employed for reciprocating the partition 42 and for adjusting same to the desired position.

In some instances the particles of grit will take on charges which may tend to cause them to induce a charge in the sheet and thus the particles would land on the sheet substantially perpendicular to the plane of said sheet. In order to avoid this as much as possible and to counteract a tendency for the particles to assume positions perpendicular to the sheet, the electrodes 32 and 33 may be supplemented by auxiliary electrodes 44 and 45 which may have a voltage regulated to exert a sufficient electrostatic field effect or action to prevent the particles from taking undesirable positions just as they strike the glue. If desired, this auxiliary field whose lines of force

[fol. 744]

are indicated at 66, may be extended a desired distance beyond the point of actual deposition so that it will function for a period of time after the sheet has moved beyond the effect of the major electrostatic field.

Inasmuch as the poles or electrodes 36 and 44 and 37 and 46 are of like signs, there will be no tendency to set up extraneous electrostatic fields between these electrodes other than substantially ineffective electrostatic or electro-magnetic fields, as the case may be, due to difference in actual potential of the two fields 36 and 66. In any event, inasmuch as the electrostatic fields employed have their lines of force substantially parallel, the effect of any extraneous field set up between the electrodes 36 and 44 and 37 and 46 should be substantially negligible in disturbing the desired deposition and orientation of the particles on the sheet.

An illustration of one arrangement of the electrodes which will set up the desired electrical action is shown in Figure 11 in perspective. Of course in some instances it may be desired to eliminate the secondary electrostatic field 66 and by proper control of the moving partition 42 the desired results may be attained as to ultimate effect of the field on the grit particles.

Figure 11 serves to illustrate a further modified form of the hopper. In this form the hopper is of a general V-shape cross section and the bottom thereof being open is provided with a tapering slot indicated at 47. The slot is of greater dimensions at one end than at the other end so that by proper positioning of the hopper the particles of abrasive acted upon by one of the electrodes and tending to be projected toward the other thereof would be counteracted by the tapering slot in the hopper, thus preventing piling up of the abrasive grit at one margin of the sheet.

It will also be understood that by regulating the height of the hopper 46a from the sheet that different effects may be obtained to the point where the desired orientation and deposition of the grit is attained.

The electrodes 44 and 46 may be employed in Figure 11 as in Figure 10 if that be found necessary under the circumstances.

Referring now to Figure 12, the apparatus here shown discloses a hopper 56 into which the comminuted abrasive material and an adhesive material in plastic form are introduced. The hopper may be suitably heated to maintain the adhesive material in a liquid state so that it will flow from a suitable opening 60 provided in the bottom of the hopper.

As the incorporated grit and adhesive material flow from the hopper on to the sheet 23, the mass is subjected to the force of an electrostatic field 61 set up between the electrodes 62 and 64 thus orienting the particles of grit contained in the adhesive according to their electrical responsiveness to such a field, that is to say, the grits having major and minor axes, as hereinbefore pointed out, will under the influence of the electrostatic field become aligned with the lines of force 61 shown in Figure 12, while in the glue or other adhesive and thus be carried by the glue or adhesive on to the sheet where they will be deposited with their major axes substantially parallel with the plane of the sheet and substantially perpendicular to the margins thereof.

Figure 13 shows the sheet made according to the methods herein described and it will be observed that in many instances a plurality of layers of grit may be provided and for this reason a sheet such as that shown in Figure 13 is illustrated having two or more layers 41a of grit material and adhesive material deposited thereon.

In order to make clear to those skilled in the art the basic principles involved in employing the electrostatic field for the purposes of the present invention, Figures 14 to 18 have been incorporated in this case showing the various steps in development to obtain the optimum of results in deposition, distribution and orientation of the abrasive particles.

It will be understood that these Figures 14 to 18 all illustrate methods for producing deposition, distribution and orientation, but that some produce better results than others as will appear from the following description.

On reference to Figure 14, a pair of electrodes, preferably in the form of circular discs 92 and 93 are employed, one of these discs being connected to the positive side, such as at 94, of a source of difference of electrical potential and the other disc being connected to the negative side or ground as the case may be.

A relatively high difference of electrical potential was thus impressed on the two plates establishing an electrostatic field between them, into which abrasive particles 96 were introduced, either by gravity as shown in Figure 14, or by any other suitable means, so as to produce a stream of the particles as they enter the electrostatic field established between the plates 92 and 93.

This pair of substantially circular metal plates are made about 8 inches in diameter and provided with curved edges indicated at 97 and 98, thus preventing excessive concentration of the field at the edges of the plates thereby reducing the possibility of sparking between the plates.

These electrode plates were spaced about 5.5 inches apart in air and were connected to a source of electromotive force approximately 165 kilovolts, so that a substantially constant electrical potential range of about 19 kilovolts inch was maintained between them.

The mineral pulverized material (in one instance grade 80 silicon carbide) was deposited so as to fall in a stream between the two plates 92 and 93.

When either of the plates is grounded, the mineral stream which was originally at ground potential is deflected toward the ungrounded plate, so that if an adhesively coated strip was introduced between the plates 92 and 93, while orientation of the particles transversely of the strip was attained, yet deposit of mineral would take place in excess at one edge over that at another edge of the strip.

To overcome this uneven distribution of particles, the plates may be connected to the source of potential through a reversing switch or pole changer which alternately serves to connect each plate to ground and to high potential, in other words, supply an alternating voltage to said plates.

One manner of accomplishing this is disclosed in Figure 18, in which the plates 92a and 93a are connected through a pole changing apparatus 96a to a source of relatively high electrical potential, 97a.

The stream of mineral at low frequencies of reversal of polarity moved from one plate to the other following the reversals of polarity of electrical potential so that over a given period of time (say one electrical cycle) the air space be-

tween the electrodes 93a and 93c was substantially uniformly filled with mineral particles.

The source of electrical energy 97a is so arranged in this circuit that one side 98a thereof is connected to ground.

In the case of Figure 16, the plates 93b and 93d are so arranged in the circuit that one of them is connected to one of the sources of difference of potential indicated at 97b and the other to the other source indicated at 98b, the electrical centre of the sources indicated at Figure 16 being grounded as at 100. In this arrangement the main mineral stream becomes divided into two separate streams each of which tended to flow toward one of the plates thereby leaving a low mineral concentration in the space midway between the plates.

From the foregoing Figures 14, 15 and 16 it will be observed that we are enabled by adjustments and variations in the intensity of the electrical field and by its polarity and/or periodicity of change and by other adjustments, to regulate what will happen to the mineral grits as they are introduced into the electrical field. Thus where it is desirable that the grits be more heavily deposited at one portion of the adhesive coating backing than at another portion this can be regulated to a desired degree as required.

Should it be desired to prevent excess deposition of the grit in predetermined areas, then the form of the invention shown in Figure 9 and hereinabove described may be employed. For the purpose of manufacturing abrasive discs as disclosed herein this form of the invention finds utility.

In Figures 17 and 17a, a further alternative arrangement of the electrode plates is disclosed. Figure 17 being a plan view looking down on the plates, the backing element being indicated at 101 and the plates at 93c and 93c. Figure 17a is an end elevation looking inwardly in the direction indicated by the arrow A in Figure 17.

In Figures 17 and 17a we disclose the electrodes arranged in convergent planes so that the portions of the surfaces of the discs were closer together than other portions, the purpose being to further allow for adjustment in distribution of the grit particles.

The grit particles entering this electrostatic field are subjected to a variation in potential gradient from 17 k.v. inch to 34 k.v. inch, or any other variation of the electrical potential gradient, depending upon the voltages employed, size of plates, etc.

The stream of mineral is allowed to fall into the zone whose gradient is about 19 k.v. inch. There is in such circumstances apparently no tendency for the mineral particles to migrate toward the zone of high gradient, and the general dispersion and orientation of the particles is not materially interfered with and not materially different from that where the plates are substantially parallel, and the potential gradient therefore substantially uniform.

Successful results may be obtained with any of the foregoing arrangements, by the employment of an abrasive grit of a grade 1½ flint, preferably of a splintery nature.

We find that a higher electrical potential gradient may be maintained without disruptive discharge or so-called spark-over with flint, for example, than with other grits such as silicon carbide, inasmuch as in the same air space potential gradient and with the same relative quantity of grit introduced thereinto, the conductivity of silicon carbide, being higher than that of flint, tends to produce an increased tendency to spark-over or brush discharge, as it is sometimes termed, and care must in some cases be exercised to prevent the formation of a conducting path between the plates.

A method of overcoming this difficulty for certain purpose is shown in Figures 18 and 18a, wherein the two plates 93d and 93d' were arranged on opposite sides of insulating plates 102 and 103.

While the employment of these plates finds value with certain minerals, there is no marked difference in the action of the electrostatic field with other minerals, and we have found this arrangement of Figures 18 and 18a to be of value in increasing the activity of flint, but of much less perceptible value in increasing the activity of silicon carbide, inasmuch as spark-over or brush discharge sometimes occurs which causes the greater part of the applied voltage to be built up across the insulation.

The observed motion of the particles was substantially the same with or without the insulation, but, as pointed out in the case of some abrasive particles, an increased activity without a resultant brush discharge was observed. The plates also serve as a means to mechanically confine the activity of the particles to the area within the plates.

Referring now more particularly to the form of the invention shown in Figure 19, it will be observed that here may be provided a form of the apparatus wherein the electrode plates are alternately connected to ground. In this form of the invention the plates indicated at 104 and 105 are connected by conductors 106 and 107 to the negative and positive sides, respectively, of sources of electrical difference of potential 108 and 109, that is, sources of potential being connected in series as shown.

A grounding switch is provided indicated generally at 110 and has its terminals 111 and 112 thereof connected to ground as indicated at 113, switching members 114 and 115 serving to alternately connect the conductors 106 and 107 with ground.

It will be seen from the form of the invention disclosed in Figure 19 that by the alternative grounding of the plates 104 and 105, the orienting force exerted on the particle is uniformly maintained by virtue of the maintenance of a constant gradient between the plates. Dispersion of the particles thus uniformly obtained by the use of the switching arrangement prevents the bulk of the particles (which, it will be understood, are at ground potential when they pass into the zone of the plates) from being directed more to one plate than to the other.

The form of the invention shown in Figure 19 operates similarly to the form of the invention shown in Figure 9.

Reverting to the form of the invention disclosed in Figures 8 and 9, the structure there employed including a reversal of polarity does not include the insulating plates and these, under ordinary circumstances, are not required.

Under conditions shown in Figure 14 and without the use of insulation on the plates or between them, flint particles dropped into the field whose gradient was 18 k. v. inch were fairly well oriented on the sheet but the distribution is not entirely uniform.

An increase in gradient from 18 to 17.5 k. v. inch resulted in the production of a marked in-

[fol. 746]

cross in the degree of orientation, but as well increased the inequality of distribution.

With abrasive grains of silicon carbide a limitation of the potential gradient was required so as to prevent dielectric breakdown.

The use of insulation on the plates serves to cause the mineral to be more evenly distributed, but it will be understood that some slight amount of orientation must be sacrificed owing to the slight reduction in the potential gradient caused by the employment of the insulating plates.

From the foregoing it will be observed that by adjustment of the electrostatic field value and/or adjustment of the plates with respect to the air space between them and/or their singularity with respect to each other, and/or the periodicity of polarity reversal, we are enabled to produce desired effects in the orientation and distribution of the grit particles on the sheet.

Where the particles are deposited on shingle material for the purpose of roofing shingles and the like, it will be observed that by causing them to lie flat on the adhesively coated sheets, such as an asphaltum adhesive sheet or the like, the employment of a lesser number of particles to cover a given area of the shingles is required.

Certain phases of the features of our invention dealing with the process and apparatus are claimed in our application Serial No. 200,550, filed March 31, 1938. Another phase of the process of deposition is claimed in our application Serial No. 238,612, filed June 3, 1940.

Having thus described our invention and illustrated its use, what we claim as new and desire to secure by Letters Patent is:

1. An abrasive article comprising a plurality of convolute laminations of abrasive coated material having the edges of said laminations exposed to form a substantially continuous abrading surface, the individual particles of abrasive material being held between the laminations and oriented with their longitudinal axes substantially perpendicular to said abrading surface formed by edges of said laminations and abrasive particles held thereby.

2. An abrasive article including a body formed of a convolute preformed flexible strip of adhesively anchored abrasive material having at least one edge thereof exposed to afford a substantially continuous abrading surface, the individual convolutions of said article being in relatively spaced relation to render the abrading surface flexible edgewise.

3. An abrasive article including a body formed of a convolute preformed flexible strip of adhesively anchored abrasive material, the individual convolutions of which are slightly spaced to afford clearance at the abrading surface and to render the same flexible.

4. An abrasive article including a body formed of a convolute preformed flexible strip of abrasive material, the individual convolutions of which are slightly spaced but adhesively connected to afford clearance at the abrading surface and to render the same flexible.

5. In the manufacture of abrasives, the steps which include loosely winding a strip provided with a layer of adhesive containing a grit to form a plurality of slightly spaced convolutions while the adhesive is still plastic but partially dried so as to cause the individual convolutions to adhere flexibly together to thereby form a disk-like abrading surface and to prevent displacement of the grit.

6. In the manufacture of abrasives, the steps which include forming a strip provided with a layer of adhesive containing a grit into a partially solidified state of the adhesive to fix the position of the abrasive and loosely winding the strip to form a plurality of slightly spaced convolutions while the adhesive is still plastic so as to cause the individual convolutions to adhere flexibly together to thereby form a disk-like abrading surface, and then setting the adhesive.

7. In the manufacture of abrasives, the steps which include loosely winding a strip provided with a layer of waterproof and flexible adhesive containing a grit to form a plurality of slightly spaced convolutions and while the adhesive is still plastic but in a partially dry condition so as to cause the individual convolutions to adhere flexibly together to form a disk-like abrading surface and prevent displacement of the grit from a predetermined position.

8. In the manufacture of abrasives, the steps which include securing a layer of abrasive material to a sheet or strip by a waterproof and flexible adhesive material, drying the adhesive short of final setting but sufficiently to retain the abrasive material, then winding the sheet into a convolute form to cause the individual convolutions thereof to adhere loosely together, then introducing an anchoring adhesive between said convolutions to firmly secure them into a substantially homogeneous abrasive device, then setting the adhesive finally to a flexible and waterproof condition.

9. In the manufacture of abrasives, the steps which include securing a layer of abrasive material to a sheet or strip by a waterproof and flexible adhesive material, drying the adhesive short of final setting but sufficiently to retain the abrasive material, then winding the sheet into a convolute form to cause the individual convolutions thereof to adhere loosely together, then submerging the article in an adhesive to cause the same to flow between the convolutions thereof, then setting the adhesive finally to a flexible and waterproof condition.

10. In the manufacture of abrasives, the steps which include securing a layer of abrasive material to a sheet or strip by a waterproof and flexible adhesive material, drying the adhesive short of final setting but sufficiently to retain the abrasive material, applying a sizing adhesive to said strip, then winding the sheet into a convolute form to cause the individual convolutions thereof to adhere loosely together, then setting the adhesive finally to a flexible and waterproof condition.

11. In the manufacture of abrasives, the steps which include securing a layer of abrasive material to a sheet or strip by an adhesive material, then prior to final setting of the adhesive winding the sheet into a convolute form to afford a disk-like abrading surface and to cause the majority of the individual particles of grit to become oriented with their major axes substantially perpendicular to said surface.

12. As a new article of manufacture, an abrasive implement comprising a sheeted element having a cutting edge including abrasive particles having their major axes arranged in substantial parallelism with the plane of said element and substantially perpendicular to said edge.

13. A new article of manufacture including a plurality of laminated sheeted portions marginally exposed to form an abrading surface, said portions being in superposed relation and having

abrasive particles positioned relatively to one another by electric action, substantially all of the abrasive particles at the said abrading surface having major and minor axes and being responsive to electric action, and substantially all of the particles being positioned with their major axes substantially perpendicular to said abrading surface.

14. A new article of manufacture including a plurality of laminated sheeted portions marginally exposed to form an abrading surface, said portions being in superposed relation and having abrasive particles positioned relatively to one another by electric action, substantially all of the abrasive particles at the said abrading surface having major and minor axes and being responsive to electric action, and substantially all of the particles on one of said portions being positioned with their major axes parallel with the plane of said portion and substantially perpendicular to said abrading surface.

15. As a new article of manufacture, a granular coated product comprising a sheeted element having elongated abrasive particles adhered thereon with their major axes arranged in parallelism with each other and adhered to the sheet with the major axes of said particles perpendicular to an edge of the sheet.

16. A new article of manufacture, a sheet material comprising a backing sheet having a coating of elongated granular abrasive particles adhered thereon, substantially all of said granular particles being uniformly positioned with their major axes substantially parallel to each other and to the surface of said backing sheet.

17. A new article of manufacture, a sheet material comprising a backing sheet, a coating of adhesive on one surface of said backing sheet and a coating of elongated abrasive granular material bonded to said sheet by said adhesive coating, substantially all of said granular material being uniformly oriented so that the major axes of the particles thereof are substantially parallel to each other and to the surface of said backing sheet.

18. A new article of manufacture comprising a base member having a coating of irregularly shaped and elongated abrasive particles adhered thereon, substantially all of said particles being uniformly positioned with their major axes substantially parallel to each other and to the surface of said base member.

19. As a new article of manufacture, a granular coated product comprising a sheeted element having elongated abrasive particles adhered thereon, the adjacent particles all being arranged with their major axes substantially uniformly oriented in respect to each other substantially perpendicular to one edge of said sheeted element and in parallelism with the surface of the sheet.

RICHARD PAUL CARLTON.
THEODORE JOSEPH MILLER.

[fol. 748]

July 8, 1941. R. P. CARLTON ET AL 2,248,853

ABRASIVE ARTICLE AND METHOD OF MAKING SAME

Original Filed June 1, 1933 5 Sheets-Sheet 1

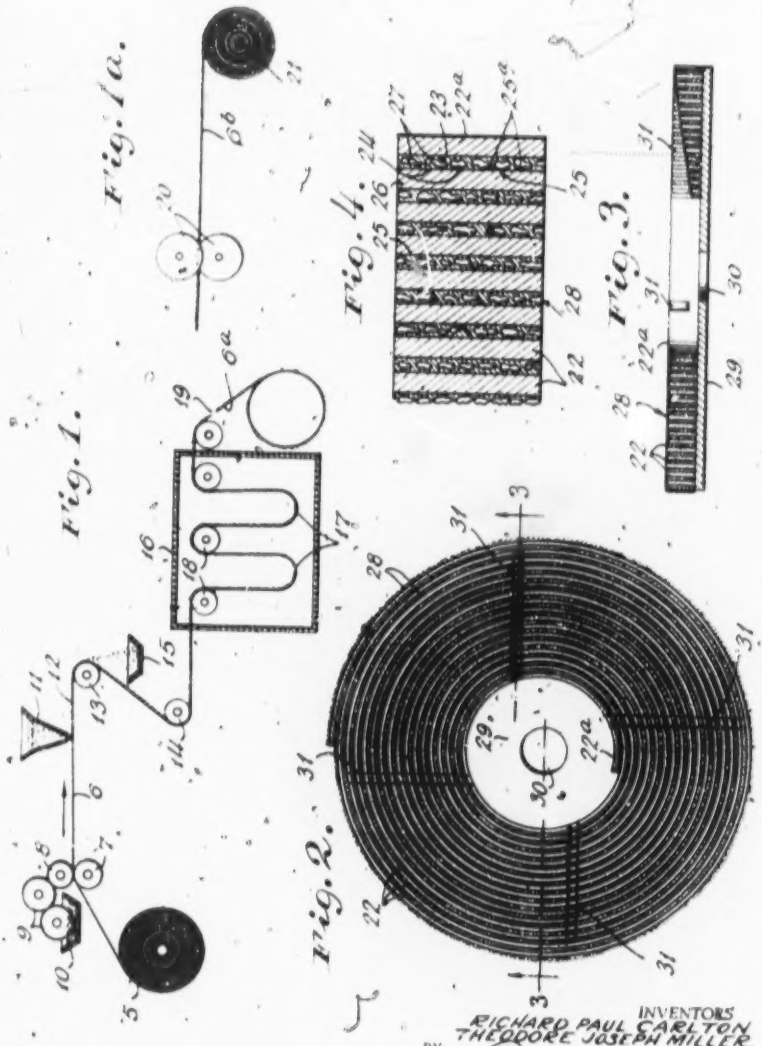

INVENTORS
RICHARD PAUL CARLTON
THEODORE JOSEPH MILLER
BY Paul Carpenter
their ATTORNEY

[fol. 749]

July 8, 1941. R. P. CARLTON ET AL 2,248,853

ABRASIVE ARTICLE AND METHOD OF MAKING SAME

Original Filed June 1, 1933 5 Sheets-Sheet 2

Fig. 5.

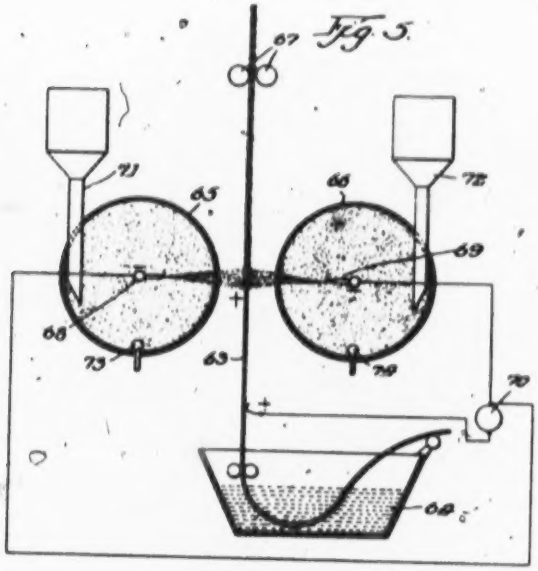

Fig. 6.

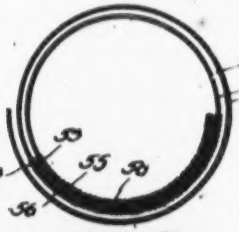

Fig. 7

Richard Paul Carlton
by Theodore Joseph Miller
By Paul Carpenter
Their Attorney.

[fol. 750]

July 8, 1941. R. P. CARLTON ET AL 2,248,853

ABRASIVE ARTICLE AND METHOD OF MAKING SAME

Original Filed June 1, 1933 5 Sheets-Sheet 3

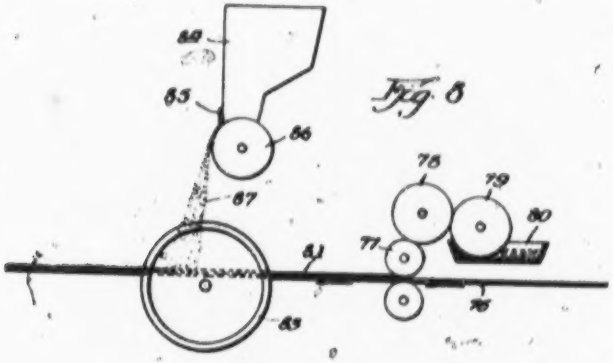

Fig. 8

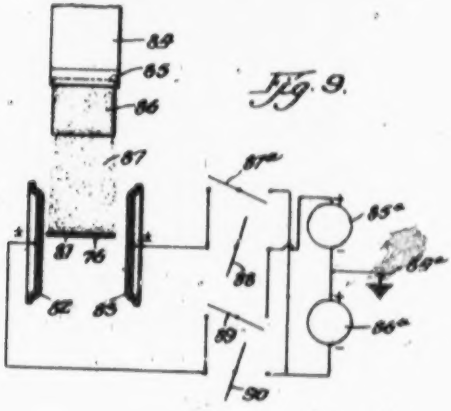

Fig. 9.

Richard Paul Carlton,
and Theodore Joseph Keller
By Paul Carpenter
Their Attorney.

[fol. 751]

July 8, 1941. R. P. CARLTON ET AL 2,248,853

ABRASIVE ARTICLE AND METHOD OF MAKING SAME

Original Filed June 1, 1933 5 Sheets-Sheet 4

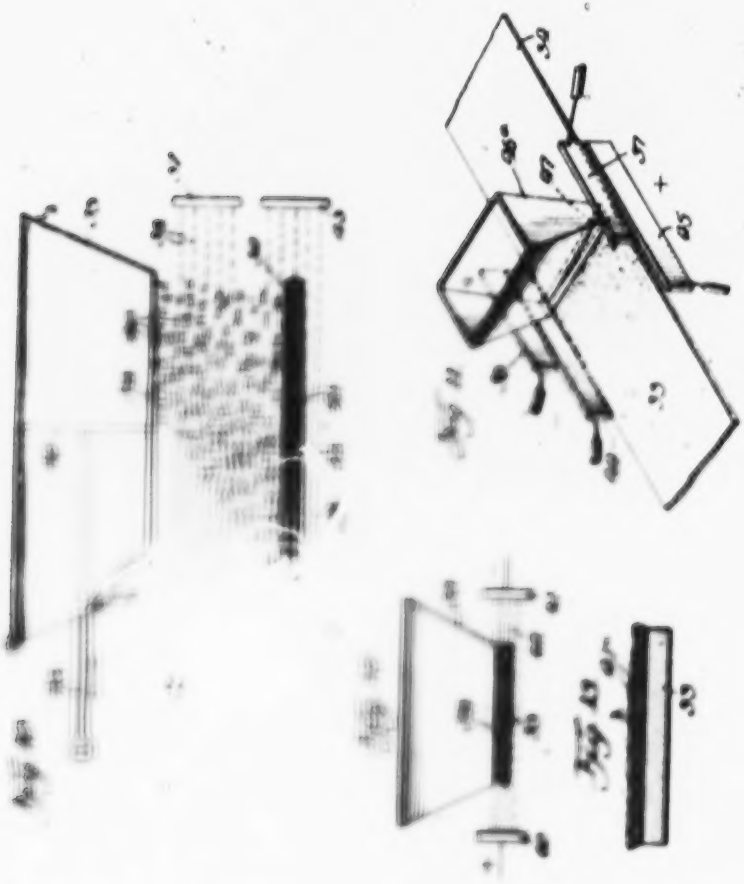

Richard Paul Carlton
and Theodore Joseph Keller
By Paul Carpenter
Their Attorney

[fol. 752]

July 8, 1941. R. P. CARLTON ET AL 2,248,853

ABRASIVE ARTICLE AND METHOD OF MAKING SAME

Original Filed June 1, 1933 5 Sheets-Sheet 5

Fig. 14

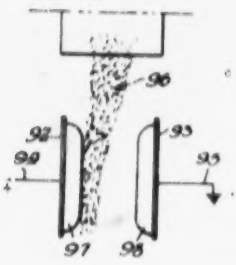

Fig. 15

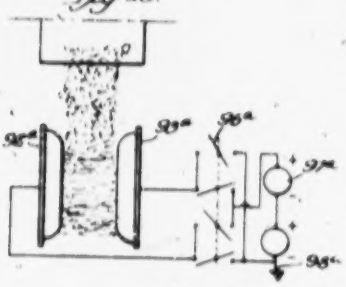

Fig. 16

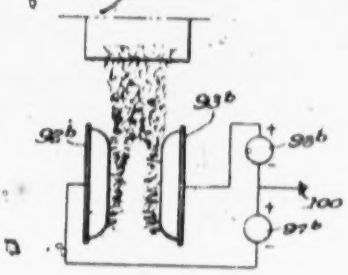

Fig. 17.

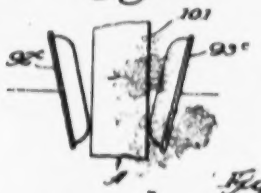

Fig. 17a

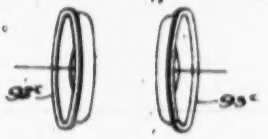

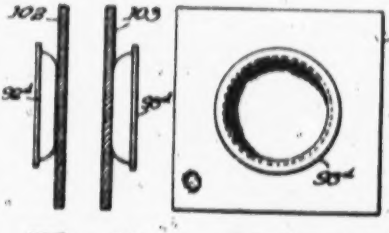

Fig. 18.

Fig. 18a.

Fig. 19

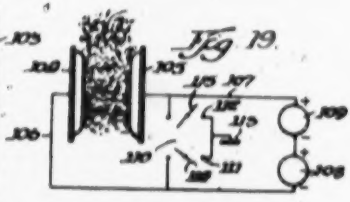

Richard Paul Carlton
and Theodore Joseph Miller
By Paul Carpenter
Their attorney

[fol. 753]

Patented July 8, 1941

2,248,853

UNITED STATES PATENT OFFICE

2,248,853

ABRASIVE ARTICLE AND METHOD OF MAKING SAME

Richard Paul Carlton and Theodore Joseph Miller, St. Paul, Minn., assignors to Minnesota Mining & Manufacturing Company, St. Paul, Minn., a corporation of Delaware

Original application June 1, 1933, Serial No. 673,806. Divided and this application June 3, 1940, Serial No. 338,613

3 Claims. (Cl. 51—290)

This invention relates broadly to coating and coating materials especially in sheet form, such as in the manufacture of abrasives, and the present invention among other things finds utility in one of its phases in the manufacture of abrasive wheels or discs, and while the invention in one of its forms is illustrated as adapted for coating and forming an abrasive disc, it will be understood that certain other phases of the invention are of quite general application and may be adapted for other purposes, such, for example, as a method of coating roofing material with pulverulent mineral.

This application is a division of our co-pending application, Serial No. 673,806 filed June 1, 1933.

This invention, as will hereinafter appear, finds especial utility in the production of grinding discs wherein the abrading surface is on a side thereof rather than on the periphery; and the invention also finds utility in coating roofing material so that particles of mineral deposited thereon are caused to lie flat, that is to say, with their major dimensions substantially parallel with the surface of the backing.

The customary procedure generally resorted to in the manufacture of abrasive wheels, discs and the like generally includes the mixing of an abrasive grit, such as aluminum oxide, silicon carbide or emery, with a suitable bonding material and then placing the mixture in a mold. The final setting up of the bonding material is then effected by curing at a sufficient temperature to cause the bond to flow and take a firm grip of the abrasive grit. Several different forms of the adhesive or bonding material are used, the more common being that known as a vitrified or ceramic bond. In making such a wheel it is necessary to fire the wheel, that is to say, subject the mixture of bonding material and grit to a sufficiently high temperature to cause the bonding material to flow and thus, in effect, form a porcelain bond between the various particles of grit. Obviously, such a wheel or disc is inflexible, broadly, and will not stand shock or sudden thrusts.

It has been proposed to employ as substitute bonds for the vitrified or ceramic bond, materials such as rubber, shellac, sodium silicate, natural and synthetic resins and the like.

In producing an abrasive disc or wheel, aside from the problems of choice of bond, there is also the necessity of controlling the ratio of bonding material to abrasive material, and it is also highly desirable that, in certain forms of the abrasive wheel or disc structure, more or less porosity or voids in the wheel acting as clearances for the material being abraded be provided so that fast and continuous cutting, together with reduction in temperature of the wheel when engaging the work, should be attained. In obtaining these desiderata it is found that the porosity of the wheel in the case of a molded structure tends to weaken the disc or wheel and, due to the porosity, the structure does not have sufficient bond to firmly anchor the grit therein.

The principal objects and advantages of the present invention reside in the provision of an improved method of manufacturing an abrasive wheel, disc or the like having characteristics in its structure which increase the cutting ability, strength and durability of the device; the provision of an improved method of manufacturing an abrasive article such as a wheel or disc for abrading purposes, in which the cost of manufacture is considerably reduced, with the attendant accomplishment of the desired control of ratio of bond, that is to say, adhesive, to the mineral or grit, and to provide such an improved method in which the same may be carried out as a substantially continuous process, thus simplifying the manufacture and reducing the ultimate costs; the provision of an improved method of manufacturing abrasive wheels and discs in which a fabric such as paper, cloth or the like may be employed as a carrier for the bond and grit and in which the ultimate size of the abrading wheel or disc may be determined easily and by a substantially continuous method; the provision of an improved form of abrading wheel or disc wherein a controlled porosity of the structure is obtained and wherein the ratio of adhesive material to grit is substantially uniform throughout the entire wheel or disc; the provision of an improved abrasive article such as a wheel or disc wherein the grit particles are oriented so that their most effective cutting edges are presented at the abrading surface and thus are brought into contact with the work more efficiently; the provision of an improved method of manufacturing abrasive discs, wheels and the like in which the production of the abrasive article may be carried out on existing sandpaper type of equipment, with the subsequent convenience of shortening the required time for producing various sizes of abrasive wheels and discs.

A further advantage of this invention resides in that, as distinguished from the molding process of making abrasive discs and wheels, which

[fol. 754]

requires that the abrasive grit and bonding material be mixed in the proper ratio, then molded, then heated, and therefore requiring each separate size of wheel or batch to be handled completely individually from the beginning to the end of the entire fabrication process, the present invention permits of the carrying out of a substantially continuous process similar to the manufacture of sandpaper and that continuous lengths of the material may be stored in drums or rolls from which the desired width of strip may be cut which is to determine the ultimate thickness of the wheel, it being observed at all times that the ratio of abrasive material to bonding material will remain substantially uniform throughout the particular wheel or disc structure which it is desired to form.

The present invention also permits of the manufacture of the basic abrasive material on standard sandpaper equipment and that this material may, after having been prepared, be preserved in stabilized form for use in manufacturing wheels as desired, the process and the article thus permitting of the production of one or more wheels of a desired size and texture, that is to say, grit size or number, at less cost and more conveniently than is possible with the previous processes known to us.

It has also been suggested in the prior art that abrasive discs and wheels be made up of a series of superposed sheets of ordinary sandpaper, emery paper or cloth, or the like glued together and subjected to pressure and heat, but in such prior proces and articles, quite inconvenient known to a considerable waste occurs in that the discs must be cut from a standard made piece of sandpaper, and the portion thus made and that used must be thrown away. The present invention distinguishes from such process in that there is substantially no waste of abrasive material which is abandoned upon any dising out process, hitherto experienced.

The present invention also has as one of its objects the provision of an improved method of producing a flexible abrasive article and the resultant article so that, as desired, the manufacturer may produce an abrasive article of the desired degree of flexibility, and, at the same time, have a substantially homogeneous structure with a substantially continuous abrading surface.

The present invention also contemplates the employment therein and for the production of the abrasive articles of a new process of orienting the abrasive grains so that their sharper points will be presented at the abrading surface. In ordinary sandpaper the abrasive grains are deposited on the adhesive coated sheet by gravity and as a result lie in haphazard fashion in the adhesive.

In the present invention it is desirable that the abrasive grains be oriented so as to present the longitudinal axes of the individual particles in a position substantially parallel with the plane of the sheet and substantially perpendicular to the margins thereof so that when the abrasive article is formed from a sheet of abrasive material made according to this invention, to form an abrasive disc, the sharper points of the grains will be presented at the margins at each of the coordinations of the disc.

This orientation of the grains may be conveniently accomplished by the action of an electrical field, and it is therefore one of the further objects of this invention to provide an improved method of and apparatus for subjecting the abrasive grains to the action of an electrical field for the purpose of obtaining the desired orientation of such particles; the invention further has as one of its objects the improved method of and apparatus for subjecting the abrasive grains during the flight by gravity to the sheet to the effect of an electrical field, preferably of the electrostatic type, for aligning the particles with the lines of force of the field, which for convenience is substantially parallel with the surface of the abrasive sheet, thus orienting the grains in the proper desired manner so they are deposited thereon.

This invention also contemplated the improved method of incorporating the grit particles in an adhesive in plastic form, and while the same is deposited together with the grit on a flexible backing, subjecting the incorporated grit and adhesive to the action of an electrical field for aligning the particles and orienting the same in the desired manner.

The method involved in the present invention may be carried out in a number of alternative steps, depending upon the form and characteristics as to flexibility and dampness which it is desired to impart to the finished article.

A preferred method of producing the abrasive article of this invention includes the selection of a fabric, preferably paper, of a desired and suitable weight, coating this paper with a bonding material and a suitable grit. For our purposes we prefer to employ a waterproof bond, and, for example, this may be any of the bonds described and claimed in the patents to Ohle 1,869,827, 1,869,828, 1,869,891, Carlton 1,778,831, 1,788,-884.

This paper then coated with a waterproof bond and a suitable grit may be of the same characteristics as the waterproof sandpaper now known to the trade as "Wetordry".

The coated fabric, preferably paper, having the grit contained in the adhesive layer may be provided with a light or heavy sizing coat, depending on the use to which the material is to be applied, though in most instances a sizing coat may be omitted.

After the bond and adhesive or grit have been applied, the material is then foreseen for a sufficient period of time to dry or partially solidify the adhesive. It is preferable that the adhesive be not set to its final condition at this time but to aid in handling the adhesive should be dried to a degree which will prevent accidental displacement of the grit.

The abrasive sheet thus formed may be rolled into what are known as Jumbo rolls and may be stored until required for slitting into suitable widths. When it is desired to complete a grinding disc with this material the same may be slit to any desired width which is to be the depth of the disc or wheel and then wound into rolls of the required diameter. Owing to the fact that the adhesive material is not entirely set when the sheet is wound into a roll, the disc or wheel then formed may be placed in an oven for further drying and for completely setting up the bond.

By regulating the tension of the strip of abrasive material as it is wound into disc-like form the compactness and resultant flexibility of the final product may be desirably controlled.

It will be understood, of course, that the resultant flexibility of the article is more or less dependent upon the type of adhesive employed, and that by controlling the flexibility of the adhesive and the tension upon winding the ultimate

flexibility of the article may be regulated. As to the waterproof qualities of the article, excellent results may be obtained by employing any of the binders disclosed in the patents mentioned herein.

In the actual finished disc material this produced particularly where the strip of adhesive material is relatively loosely wound to form a disc, the convolutions thereof will afford clearance spaces, though they may at numerous points be adhering together, by virtue of the adjacent layers of the adhesive. In the actual finished article we thus are able to produce an abrading surface which has sufficient flexibility as to binder and composite to facilitate surface sanding, as it is called, and also to facilitate clearing of the wheel when it is in use.

We have found that in some cases of flexible discs or wheels it may be desirable to cement the layers or convolutions of the disc together, but this is not the preferred practice for the normal surface sanding job, and we have found that for such purposes merely winding the strip of material upon itself and then attaching it to a suitable backing, preferably flexible in nature, will produce a grinding wheel or disc giving a desirable flexibility and an efficient cutting surface.

In instances where it is desired to make a solid wheel, that is, a relatively inflexible wheel or disc it may be desirable to cement the laminations, layers or convolutions, as they may be termed, and this may be accomplished by interposing a sizing coat as the strip is wound into the disc form. It also may be desirable in some instances to apply the sizing material in a relatively heavy coating and to subject the article to heat for causing the coating to flow, and thus relatively intimately connect adjacent layers of the abrasive material.

This operation may also be accomplished when the disc is wound by immersing the same in a bath of adhesive size to permit the adhesive material to flow by capillary action between the laminations or convolutions of the disc.

One of the important factors which effect flexibility when the disc is not of the solid type is the degree of tightness of winding, and thus by relatively loosely winding the strip of adhesive material it is possible ultimately to obtain a very flexible abrasive disc.

It is important in the production of a grinding or polishing disc or wheel of the character herein disclosed that the ratio of mineral grit to adhesive be controlled to produce the most desirable coating results and also that the uniformity of this ratio throughout the disc be maintained. By the abrasive article of this invention and the method of manufacturing the same, we are enabled to attain a high degree of efficiency in cutting operations of the disc and to give to the abrasive article a substantially uniform effective abrasive surface throughout, so that as the same becomes worn in service it yet renders the same efficient cutting and/or abrading or polishing functions.

It will be understood, of course, that dependent upon the desired characteristics of the finished product, we may employ fine, medium or coarse grits and that, correspondingly, the thickness of paper or other fabric employed and the ratio of adhesive to grit or abrasive particles must be controlled in each instance to the desired degree. In certain instances we applied the adhesive and abrasive coatings to both sides of the backing.

In selecting an adhesive material, we have obtained excellent results with adhesives formed as composite materials from Bakelite, that is, phenol and formaldehyde and other, synthetic resin binders, rubber, shellac and the like, it being understood that these materials may be made into a liquid adhesive and can be further molded or softened by subsequent flowing under heat in such manner that a thorough setting or curing of the adhesive is accomplished without detracting from the flexibility thereof.

One example of an adhesive which is suitable for our purpose is that substantially according to the following formula:

	Parts
Bakelite resin	4
Thinner (denatured alcohol)	1

This composition is agitated very thoroughly until a creamy fluid possessing some tackiness is produced. This adhesive is then applied to the sheet which then receives the abrasive material.

In the case of a Bakelite resinous material the adhesive is dried after having received the mineral either on the racks or festoons or at some other point in the production of the abrasive strip, and we prefer to employ temperatures ranging from normal atmospheric room temperature to approximately 140 degrees Fahrenheit, depending on the length of time of drying. In this drying operation the temperature is maintained at such a point that the thinner or solvent only will be driven off and thus no appreciable hardening or solidifying reaction takes place in the resin at this time. When the strips are coated with this material together with a binder, heat treated as set out above and then wound into discs or wheels, they may be further subjected to heat which causes a flowing of the resinous binder and thus sufficiently unites the several convolutions or laminations of the wheel. Of course, if it is desired to make a substantially rigid wheel in this manner, same may be tightly wound and also subjected to pressure as well as heat subsequently.

When employing a synthetic resinous material such as a Bakelite resin, the same is thinned with a suitable thinner and coated on the sheet in the same manner as that employed in conventionally forming sandpaper. The grit is then applied as quickly after the binder application as may be practicable. The thinners are evaporated at normal temperatures, and the bond thereupon solidifies to the consistency of a varnish partially dried but tack free.

The abrasive article in this condition may then be stored in large rolls and cut or slit into ribbon disc portions as required.

In order to insure flexibility of the abrasive article during handling, it is preferred that the rolls be stored in a humid atmosphere, so that the article will be possessed of flexibility during the heating operation.

After the abrasive material is cut and formed into ribbon discs, the bond may be toughened by further heat treatment at, say, 180 to 185 degrees Fahrenheit for approximately fifteen minutes, which produces a flexible consistency and is suitable for some purposes, or, we may employ temperatures ranging from 250 to 300 degrees Fahrenheit for a period of time of from fifteen minutes to one hour to produce a relatively hard bond in which there is substantially no flexibility in the binder coat itself. Where a

753

[fol. 756]

flexible binding coat is desired, a proper regulation of the temperatures and employment of suitable modifiers in the Bakelite resin will give satisfactory results.

It will be understood that the preference to storing the abrasive in large rolls, jumbo rolls, as they are called, is that sometimes it is difficult to synchronize the heating operation with the drying festoons, and for some purposes it is preferred that the abrasive sheet as it is formed be placed in jumbo rolls so that it may be slit to the desired widths as required.

In connection with the foregoing formula we have secured a flexible abrasive strip to be wound into a disc or wheel shape by employing a Bakelite material which does not produce a complete reaction to rigidity or by keeping the temperature below 212° F. and reducing the time of heat treatment.

For the purposes of this invention we prefer to employ a flexible binding material on the flexible backing, but it is to be understood that a satisfactory flexible wheel or disc may be produced employing a relatively less flexible binder by keeping the layers or laminations of the wheel separated.

We have made satisfactory abrasive wheels or discs by employing an adhesive of the varnish type such as is disclosed in the patents to Okie hereinabove referred to, and we have also employed as a binder the material disclosed in the application of Carlton and Okie, Serial No. 688,319.

Where rubber, shellac or synthetic resins other than Bakelite are employed, we also prefer to heat treat the same in the final setting or, if necessary after first applying the binder to the strip which is to be later wound into the disc form. With rubber, sulphur is added in desired amount to the adhesive material so that the vulcanization of the binder takes place in the heating step.

Under some circumstances, in order to prevent starving of the bond between the grit and the sheet, it is desirable to apply sizing coat to the back of the sheet, and this may be done during the winding of the sheet or after the original process of making the sheet simultaneously with the application of the adhesive and grit.

The outstanding advantages of the present invention, particularly where the same is wound into a roll to form a disc or wheel, reside in that we are enabled to produce a laminated abrasive structure in which the abrading surface presents a more definite and more uniform porosity due to the laminations and due to the spot contacting of the adhesive on one layer with the adjacent layer, and thus producing a greater proportion of voids than is possible or obtainable where abrasive grit and a bond are molded even where equal ratios of bond to grit are employed. Our invention also produces a laminated abrasive structure having an increased strength due to the incorporation therein of the coated backing of fabric such as paper or cloth, which adds to the strength of the entire wheel making the same less brittle and more flexible and permitting of thinner wheels to be prepared than by any other prior method known to us.

Another distinct advantage of our invention resides in the fact that the mineral grits, owing to their elongated nature, may be oriented on the abrading device so that their sharp points are presented at the abrading surface. For some purposes it is desirable to deposit the abrasive grit by an electrical field or other electrical action, such as by an electrostatic field, in such a manner that the grits will become oriented with their major axes parallel to the surface of the sheet and perpendicular to the abrading surface, particularly where the grits are placed so that their major axes are perpendicular to the margins of the strip from which the wheel is wound. We shall describe such a process of deposition of the grits more fully hereinafter.

It will be understood, of course, that after the abrasive strip has been wound to the desired diameter and with the desired degree of tightness, a suitable disc backing may be affixed by a waterproof binder if desired on one surface of the resultant abrasive disc so that the disc may be mounted on a suitable shaft for imparting rotation thereto.

The several methods which may be employed in the manufacture of the abrasive article itself are illustrated in the accompanying drawings, in which—

Figure 1 is a schematic view of an apparatus which may be employed for producing the abrasive article of this invention.

Figure 1a is a schematic view of a slitting and winding apparatus which may be used with the apparatus shown in Figure 1.

Figure 2 is a plan view of an abrasive disc made according to this invention.

Figure 3 is a transverse sectional view taken on the line 3—3 of Figure 2 looking in the direction indicated by the arrows.

Figure 4 is an enlarged transverse sectional view taken on the line 3—3 of Figure 2 looking in the direction indicated by the arrows.

Figure 5 is a schematic view of apparatus for coating one or both sides of the abrasive article.

Figures 6 and 7 are fragmentary sectional views of an alternative form of an abrasive article made according to this invention.

Figure 8 is a schematic view of an alternative form of apparatus for securing orientation of the abrasive particles.

Figure 9 is a view showing the apparatus of Figure 8 from another aspect.

Figure 10 is an elevational schematic view illustrating alternative apparatus for carrying out the step of orientation of the abrasive particles.

Figure 11 is a perspective view of an alternative form of apparatus of this invention.

Figure 12 is an elevational view of a still further modified form of the invention.

Figure 13 is an enlarged sectional view of a sheet illustrating the alignment of the abrasive grains thereon.

Figures 14, 15, 16, 17, 17a, 18, 18a and 19 are all diagrammatic views of alternative forms of the invention shown in Figures 8 and 9.

Referring now more particularly to the drawings, and first to Figure 1, there is shown a roll of fabric such as paper or cloth 6, from which the web 6 is unwound over an idler roller 7, to receive from a coating roll 8 a layer of the adhesive material delivered by the series of feed rolls 9 from a tank 10. The web 6 is fed beneath a hopper 11 from which is supplied a quantity of comminuted abrasive material 12 by gravity, which may be suitably regulated in any desired manner to determine the thickness of the grit layer. The positioning of the abrasive material may be controlled at this point by the use of electrical orienting apparatus as shown in Figure 8 and hereafter more fully described. The

sheet or web 6 is then trained over a roll 13 and reflexively bent upon itself by a roll 14, some of the grit in excess of that desired being removed by falling by gravity into a container 15. The web 6 with the layer of grit secured thereto by an adhesive, waterproof if desired, is then fed into a drying room or oven 16, and arranged in festoons 17 by the provision of rolls 18 in said drying room.

The temperature of the drying room is maintained at a degree which will only partially set the adhesive sufficiently to permit handling of the abrasive coated strip or sheet indicated at 6a as it leaves the drying room. At this point Figure 1 shows the sheet as broken, indicated at 19, inasmuch as it may be desired to store the resultant product at this point before continuing the same to the slitting apparatus. However, if it is desired to have a continuous making process, then the sheet or web is supplied to slitting apparatus represented by the cutting knives 20, as shown in Figure 1a. These knives may be arranged at any convenient distance apart, depending on the width or thickness of the strip to be cut and ultimately wound into the abrasive disc.

From the slitting apparatus the several resultant strips of abrasive sheet material may be fed to a mandril 21, on which they may be wound into the final abrasive disc elements producing the articles such as shown in Figures 2, 3 and 4.

It will be understood that while the strip shown at 6b in Figures 1 and 1a is wound with the abrasive coated side outwardly, thus leaving an outer abrasive coated surface exposed at the last convolution, the disc may be as readily wound in the opposite direction so that the abrasive coated surface of each lamination will be presented inwardly. Inasmuch as these discs are intended to grind on one of their side faces, and as a substantially continuous abrasive coated surface is thus afforded, the discs may be wound either way desired.

It is also to be understood that by placing the strip 6b under more or less tension as desired, a tighter or looser wound disc may be obtained.

When the abrasive material is deposited by gravity as shown in Figure 1, it will be understood that the abrasive grains will be largely lying haphazard on the abrasive surface, though a large number of them will be oriented by the contact of the freshly coated surface with the roll 14 so that when the strip 6b is wound into a roll to form the disc the grains will be knocked down in such a manner that their sharper points will, as the disc is employed in grinding or polishing the surface, be brought against the surface of the work. However, to insure that the majority of the grits will be so oriented, we have provided methods and apparatus for so orienting the grains which will be described more fully hereinafter.

Figures 2, 3 and 4 illustrate a disc made according to this invention, wherein the disc is composed of a plurality of convolutions 22 of abrasive coated material affording a laminated abrasive structure. The laminations are held together by the adhesive material establishing contact on one convolution with the back surface of the adjacent convolution so that a structure somewhat similar to Figure 4 will be obtained, the innermost convolution 22a having its coating 23 of adhesive material contacting at a plurality of points, indicated at 24—24 with the back surface 25 of the immediately adjacent convolution 26. Thus the abrasive grains indicated at 27 in the layer of adhesive 23 are substantially embedded therein with their major axes and thus their sharper cutting points presented toward the margins of the laminations. In this way a substantially continuous abrading surface indicated at 28 on the surface of the disc is thus provided. It will be understood that care must be exercised that the proper weight of paper with regard to abrasive and adhesive be selected.

The disc-like structure thus provided may be secured to a flexible backing 29 of paper or cloth or other suitable material having an axial opening 30 by which the same may be attached to the rotating shaft of a grinding machine.

It will be understood that the backing 29 should be cemented to the disc by a flexible waterproof adhesive similar to that employed in the disc itself, or, if desired for some purposes, the backing 29 may be of a rigid material and the disc likewise cemented thereto.

In Figure 4, it will be understood, of course, that the thicknesses of the convolutions and layers of grit and adhesive have been greatly exaggerated in size, although it is conceivable that one might produce an abrasive article having convolutions whose thicknesses are as great as those shown in Figure 4. However, in the ordinary form of the invention for employment in standard surface grinding the disc is made up of a sheet not substantially greater in thickness than a sheet of ordinary sandpaper, thus lending to the final product a desired degree of flexibility.

It will be observed that in some instances it may be desirable to provide grooves in the abrading surface 28, these grooves being shown at 31 in Figures 2 and 3. It will also be noted that the grooves 31 are preferably of greater depths at their inner ends toward the axis of the disc than at their outer ends adjacent to the periphery of the disc. These grooves may be formed in the disc after the fabrication of the same inasmuch as forming the grooves in the strip prior to finally winding would require considerable care in aligning the notches in each convolution from which these grooves are formed.

The disc thus formed contains a number of voids which are afforded by virtue of the grit particles themselves holding the laminations apart and by the vacant places indicated at 32a where the glue or other adhesive does not completely fill the spaces between the convolutions. Thus the abrasive article quickly cleans itself as it works and clogging or loading of the article is practically impossible.

We have found that a satisfactory grinding and polishing wheel may be constructed by methods disclosed herein, and in one form of the invention, which is illustrated in Figures 6 and 7, we apply a coating of adhesive material containing an abrasive to both sides of the strip forming the flexible abrasive article. This coating operation may be accomplished by the apparatus shown in Figure 5.

After making a double coated strip, it is then wound loosely into a configuration substantially like that shown in Figures 6 and 7. The thus wound material is then thoroughly cured and dried. After curing, the disc-like structure then afforded is cemented to the cloth backing in such a manner as to preserve the open or spaced convoluted structure as shown. The polishing compound, which may be according to the formula appearing below, is then forced into the

[fol. 758]

spaces between the layers and when completely filled with polish the disc is then allowed to set for sufficient time to solidify the polish base. This drying time, we find to give best results by subjecting the article to a drying temperature for approximately forty-eight hours.

A satisfactory formula which we have employed for the purpose of compounding the polishing material may be as follows:

	Grams
Nitro base thinned to 50% solids	200
Dibutyl phthalate	4.0
400 silicon carbide	40.0
Tripoli	150.0
Borax	16.0
Erkalin	4.0

From the foregoing it will be observed that we produce a convoluted structure indicated generally at 80, composed of the laminations of the convolutions 81 of suitable fabric coated on both sides as indicated at 83 and 84 with adhesive 85 containing the comminuted abrasive material 86. It will be noted that sufficient space is afforded between the layers 81 particularly as shown in Figure 7 to permit of the introduction of a comminuted polishing material indicated at 87. Thus the finished article possesses both grinding and polishing properties.

It will be understood that it is highly desirable that the comminuted abrasive material be disposed on the strip or sheet in such manner that the individual grits will have their major axes preferably lying parallel with the surface of the sheet, and, where the sheet is to be wound later to form a disc which marginally exposes an edge of the sheet for forming the abrasive surface, that the grits be perpendicular or substantially perpendicular to the longitudinal margins of the sheet.

While orientation of the grits with their major axes parallel with the surface of the sheet and substantially perpendicular to the edges thereof, may be more or less accomplished in simple gravity deposition of the grits on the adhesive coated sheet, a positive orientation of the individual grains may be accomplished by electrical action, that is to say, the grits may be deposited on the sheet in the presence of an electrical field, for example electrostatic, or if the grit particles are of a magnetically responsive nature then in the presence of an electro-magnetic field. Grits deposited in the presence of such an electrical field will be caused to align themselves with the lines of force of the electro-magnetic or electrostatic field as the case may be.

For most abrasive articles an electrostatic field will perform the function inasmuch as most of the grit particles commonly employed in the abrasive arts are of a non-magnetic character and are non-conductors and practically all will respond to the force of an electrostatic field.

Referring specifically to Figure 5, we provide a suitable backing for carrier strip 82 which receives coats of adhesive material on both sides thereof from a suitable tank 84, the strip being conducted upwardly between two chambers 85 and 86 and then conducted through edge guide rollers 87.

In the chambers 85 and 86 there are provided electrodes 88 and 89 of preferably negative polarity, the sheet being itself of a conductive nature and connected to the positive side of a source of electric motive force indicated at 70.

The apparatus receives grit from hoppers 71 and 72 which is agitated in the form of clouds within the chambers 85 and 86 by air blasts introduced at the nozzles 73 and 74.

The apparatus shown in Figure 5 is similar to that shown in the patent to Smyser 1,788,600, and serves to illustrate one apparatus for carrying out the double coating simultaneously. This form of the apparatus does not, however, produce orientation of the grit particles with their major axes parallel to the plane of the sheet, and reference will be made hereinafter to forms of the invention including apparatus for this purpose.

It will be understood that the sheet may be coated on both sides by running it twice through either a gravity coating apparatus or any of the apparatus shown in the other figures of the drawings.

As herein pointed out, it is desirable to orient the grit particles so that they will lie with their major axes substantially parallel to the surface to be coated, and they will thus present their sharp points at the edges of the strip as the same becomes worn in use as an abrading disc.

This orientation of the particles uniformly on the sheet is also of utility in the manufacture of mineral coated shingles wherein it is desirable that the particles of mineral, granules or the like, be deposited so that a minimum number of the mineral granules is required to cover a given area of the asphaltum sheet or other material from which the carrier or backing of the shingle is made.

We have illustrated herein a number of ways in which this may be accomplished which are all included in the disclosures of Figures 8 to 12, both inclusive, and Figures 14 to 16, both inclusive, it being understood that these electrical orienting devices are to be used in the general apparatus shown in Figures 1 and 1a at the point indicated by the hopper 11.

With reference first to Figures 8 and 9, we have employed a backing 76, of suitable material which receives a coating on the upper surface of the horizontal flight thereof, shown in Figure 8, this coating being applied from a set of adhesive distributing or applying rollers 77, 78 and 79, the latter taking up adhesive from a tank 80. This adhesive layer is indicated at 81 and the backing is then propelled to the left as viewed in Figure 8 between electrodes forming an electrostatic field.

These electrodes, we have found, may conveniently comprise a pair of circular disc-like plates 82 and 83, between which the horizontal flight of paper 76 passes at a desired rate of speed. Other forms of the plate electrodes may be employed, but we have found that this type produces a uniform field and highly satisfactory performance.

Above the flight 76, and at a distance sufficiently remote from the electrodes so as to be substantially unaffected thereby, we provide a hopper 84, which may contain abrasive grains of the desired size. We find that for our apparatus an abrasive grain or pulvule of a slivery character that is somewhat elongated, will give highly desirable results as to orientation, though it will be understood that it is not necessary that this type of pulverulent material be employed in order to attain the results of this invention. Practically all of the grits employed in the abrasive industry today are characterized by having a major and a minor axis so that they become responsive to the action of an electrical field when introduced into the presence of the same.

These grits are deposited by gravity from a

hopper 84 having a suitable controlling gate 85 over a distributing roller 86 so that they fall in a substantially continuous stream 87 toward the adhesive surface 81, passing between the electrodes 82 and 83 in their path to the adhesive surface.

We have discovered that a static electrical field solely, that is to say, without outside influence, mechanical or otherwise, acting upon the grit particles, tends to deflect them toward one of the plates, and in order to correct this and produce a more uniform distribution and yet obtain orientation, we employ a pole changer, diagrammatically illustrated in Figure 9, through which the two electrodes 82 and 83 are connected to the source of electrical difference of potential.

A source of electromotive force, preferably of relatively high voltage, is provided. The voltage employed in one arrangement of the electrodes was about 105 kilovolts and in employing this voltage the plates or electrodes were spaced about 5.5 inches apart in air. This arrangement served to maintain a constant electrical potential gradient of approximately 19 kilovolts per inch between the electrodes.

In correcting for uneven distribution, the electrical center of the source of difference of potential is grounded as indicated at 84a in Figure 9, and the source composed of two units 85a and 86a is so connected through pole changing switches 87a, 88, 89 and 90 that the relative polarity of the two plates 82 and 83 forming the electrostatic field was changed at a desired frequency.

We have found that, for our purposes, with the plates spaced between 5 and 6 inches apart in air, the best results are obtained by the use of electrical potential gradients of the range of from 17 to 20 k. v. per inch. We also find that where reversal of polarity is resorted to, as in the disclosure in Figure 9, the optimum of frequency of polarity change or reversal should be in the vicinity of two cycles per second. However, we have found that ranges of from one cycle per second to four cycles per second produce satisfactory results and that little change was noted in thereby producing satisfactory distribution and orientation of grit particles on the sheet.

It will be understood that the foregoing disclosure of values as to voltages, rates of polarity change, and size of and distance between the plates is all subject to variation to suit the particular conditions and results to be attained thereby.

We have also found that with different types of abrasive grains different results were obtained. For example, with silicon carbide in some arrangements of the plates compensation had to be made for difficulty encountered due to the high conductivity of silicon carbide, where as with certain other grit particles these difficulties were not found present, such, for example, as in the use of flint.

From the foregoing it will be understood that the electrostatic field established either constantly or intermittently together with reversal of polarity between the plates 82 and 83 affects the grit particles, as they enter the electrical field, to bring them into axial alignment with the lines of force of this field. No appreciable difficulty is found to exist by the presence of the backing material 76 in the field, which would ordinarily be assumed to occur due to the setting up of extraneous electrostatic fields between the two electrodes and the backing itself, this difficulty being eliminated by the form of the electrodes, so that the major value and resultant force of the electrical field is retained.

In the more convenient form of the invention shown in Figure 9, successful results will be obtained by employing disc-like electrodes 82 and 83 of a diameter of about 8 inches, and with the opposed faces of the electrodes substantially parallel to each other

A further form of apparatus which we may employ for carrying out this method of deposition is illustrated in Figure 10 wherein the strip, sheet or web of Figure 1 is indicated at 32, the one side of said sheet being provided with a layer 34 of adhesive material, preferably waterproof in its characteristics, though, as will be obvious, this layer of adhesive may be of the ordinary glue bond type employed in the sandpaper industry for non-waterproof abrasive articles.

The sheet 32 is caused to travel in a substantially horizontal plane below a hopper 35 and between the electrodes 36 and 37 of an electrical field, the electrodes 36 and 37 being connected to an appropriate source of electrical potential of the required value. In actual practice what are known as high voltages may be required, though it will be understood that the difference of potential to be employed is subject to variation as desired for accomplishing the ultimate desired action.

For the purpose of the present disclosure the electrodes 36 and 37 form part of an electrostatic field, that is to say, a field in which a constant stress is set up but in which relatively small currents flow. Such an electrical field will be established between the electrodes 36 and 37 indicated generally by the lines of force 38. This field is set up between the electrodes 36 and 37 above the sheet 32 and below the hopper 35, and the field strength is regulated to such an extent as to act upon the abrasive particles as they are fed from the hopper 35.

The abrasive particles are shown as a cloud 39 but some of them are shown enlarged at 40 depicting the approximate positions which they assume as they fall by gravity through the electrostatic field. It will be understood that should the electrostatic field be of great enough strength, the particles issuing from the right hand end as shown in Figure 10, would be caused to orient themselves with their major axes parallel with the lines of force of the electrostatic field and be projected by that field from one of the electrodes toward the other thereof. Therefore, by regulating the electrostatic field to the desired optimum the particles will be caused merely to flatten out, and while they may, under these circumstances be caused to travel along the lines of force of the field, the force of gravity will tend to overcome their flight toward the oppositely charged electrode and they will fall upon the layer of adhesive, assuming positions substantially as shown in Figure 10, and indicated at 41. This orientation is more uniformly accomplished, however, in the form of the apparatus shown in Figures 8 and 9.

Inasmuch as the particles of abrasive material as they leave the hopper adjacent to the electrode 36, may in a large number of instances never reach the sheet, due to their attraction to the other electrode, we provide a movable partition 42 in the hopper, which may be adjusted transversely of the longitudinal axis of the sheet

so that the length of the slot in the bottom of the hopper may be varied to cause the grit particles to issue through only a portion of said slot. A suitable handle properly insulated indicated at 43 may be employed for reciprocating the partition 42 and for adjusting same to the desired position.

In some instances the particles of grit will take on charges which may tend to cause them to induce a charge in the sheet and thus the particles would land on the sheet substantially perpendicular to the plane of said sheet. In order to avoid this as much as possible and to counteract a tendency for the particles to assume positions perpendicular to the sheet, the electrodes 36 and 37 may be supplemented by auxiliary electrodes 44 and 45 which may have voltage regulated (by means not shown) to exert a sufficient electrostatic field effect or action to prevent the particles from taking undesirable positions just as they strike the glue. If desired, this auxiliary field whose lines of force are indicated at 46, may be extended a desired distance beyond the point of actual deposition so that it will function for a period of time after the sheet has moved beyond the effect of the major electrostatic field.

Inasmuch as the poles or electrodes 36 and 44 and 37 and 45 are of like signs, there will be no tendency to set up extraneous electrostatic fields between these electrodes other than substantially ineffective electrostatic or electro-magnetic fields, as the case may be, due to difference in actual potential of the two fields 38 and 46. In any event, inasmuch as the electrostatic fields employed have their lines of force substantially parallel, the effect of any extraneous field set up between the electrodes 36 and 44 and 37 and 45 should be substantially negligible in disturbing the desired deposition and orientation of the particles on the sheet.

An illustration of one arrangement of the electrodes which will set up the desired electrical action is shown in Figure 11 in perspective. Of course in some instances it may be desired to eliminate the secondary electrostatic field 46 and by proper control of the moving partition 42 the desired results may be attained as to ultimate effect of the field on the grit particles.

Figure 11 serves to illustrate a further modified form of the hopper. In this form the hopper is of a general v-shape cross section and the bottom thereof being open is provided with a tapering slot indicated at 47. The slot is of greater dimensions at one end than at the other end so that by proper positioning of the hopper the particles of abrasive acted upon by one of the electrodes and tending to be projected toward the other thereof would be counteracted by the tapering slot in the hopper, thus preventing piling up of the abrasive grit at one margin of the sheet.

It will also be understood that by regulating the height of the hopper 48a from the sheet that different effects may be obtained to the point where the desired orientation and deposition of the grit is attained.

The electrodes 44 and 45 may be employed in Figure 11 as in Figure 10 if that be found necessary under the circumstances.

Referring now to Figure 12, the apparatus here shown discloses a hopper 58 into which the comminuted abrasive material and an adhesive material in plastic form are introduced. The hopper may be suitably heated to maintain the adhesive material in a liquid state so that it will flow from a suitable opening 59 provided in the bottom of the hopper.

As the incorporated grit and adhesive material flow from the hopper onto the sheet 33, the mass is subjected to the force of an electrostatic field 62 set up between the electrodes 60 and 61 thus orienting the particles of grit contained in the adhesive according to their electrical responsiveness to such a field, that is to say, the grits having major and minor axes, as hereinbefore pointed out, will under the influence of the electrostatic field become aligned with the lines of force 62 shown in Figure 12, while in the glue or other adhesive and thus be carried by the glue or adhesive on to the sheet where they will be deposited with their major axes substantially parallel with the plane of the sheet and substantially perpendicular to the margins thereof.

Figure 13 shows the sheet made according to the methods herein described and it will be observed that in many instanecs a plurality of layers of grit may be provided and for this reason a sheet such as that shown in Figure 13 is illustrated having two or more layers 61a of grit material and adhesive material deposited thereon.

In order to make clear to those skilled in the art the basic principles involved in employing the electrostatic field for the purposes of the present invention, Figures 14 to 18 have been incorporated in this disclosure showing the various steps in development to obtain the optimum of results in deposition, distribution and orientation of the abrasive particles.

It will be understood that these Figures 14 to 18 all illustrate methods for producing deposition, distribution and orientation, but that some produce better results than others as will appear from the following description.

On reference to Figure 14, a pair of electrodes, preferably in the form of circular discs 92 and 93 are employed, one of these discs being connected to the positive side, such as at 94, of a source of difference of electrical potential and the other disc being connected to the negative side or ground as the case may be.

A relatively high difference of electrical potential was thus impressed on the two plates establishing an electrostatic field between them, into which abrasive particles 96 were introduced, either by gravity as shown in Figure 14, or by any other suitable means, so as to produce a stream of the particles as they enter the electrostatic field established between the plates 92 and 93.

This pair of substantially circular metal plates are made about 8 inches in diameter and provided with curved edges indicated at 97 and 98, thus preventing excessive concentration of the field at the edges of the plates thereby reducing the possibility of sparking between the plates. These electrode plates were spaced about 5.5 inches apart in air and were connected to a source of electromotive force approximately 105 kilovolts, so that a substantially constant electrical potential range of about 19 kilovolts per inch was maintained between them.

The mineral pulverized material (in one instance grade 80 silicon carbide) was deposited so as to fall in a stream between the two plates 92 and 93.

When either of the plates is grounded, the mineral stream which was originally at ground potential is deflected toward the ungrounded plate, so that if an adhesively coated strip was introduced between the plates 92 and 93, while orientation of the particles transversely of the

strip was attained, yet deposit of mineral would take place in excess at one edge over that at another edge of the strip.

To overcome this uneven distribution of particles, the plates may be connected to the source of potential through a reversing switch or pole changer which alternately serves to connect each plate to ground and to high potential, in other words, supply an alternating voltage to said plates.

One manner of accomplishing this is disclosed in Figure 15, in which the plates 93a and 93c are connected through a pole changing apparatus 96a to a source of relatively high electrical potential, 97.

The stream of mineral at low frequencies of reversal of polarity moved from one plate to the other following the reversals of polarity of electrical potential so that over a given period of time (say one electrical cycle) the air space between the electrodes 93a and 93c was substantially uniformly filled with mineral particles.

The source of electrical energy 97a is so arranged in this circuit that one side 98a thereof is connected to ground.

In the case of Figure 16, the plates 93b and 93b are so arranged in the circuit that one of them is connected to one of the sources of difference of potential indicated at 97b and the other to the other source indicated at 98b, the electrical centre of the sources indicated at Figure 16 being grounded as at 100. In this arrangement the main mineral stream becomes divided into two separate streams each of which tended to flow toward one of the plates thereby leaving a low mineral concentration in the space midway between the plates.

From the foregoing Figures 14, 15 and 16 it will be observed that we are enabled by adjustments and variations in the intensity of the electrical field and by its polarity and/or periodicity of change and by other adjustments, to regulate what will happen to the mineral grits as they are introduced into the electrical field. Thus where it is desirable that the grits be more heavily deposited at one portion of the adhesive coating backing than at another portion this can be regulated to a desired degree as required.

Should it be desired to prevent excess deposition of the grit in predetermined areas, then the form of the invention shown in Figure 9 and hereinabove described may be employed. For the purpose of manufacturing abrasive discs as disclosed herein this form of the invention finds utility.

In Figures 17 and 17a, a further alternative arrangement of the electrode plates is disclosed, Figure 17 being a view looking down on the plates, the backing element being indicated at 101 and the plates at 93c and 93c. Figure 17a is a view looking inwardly in the direction indicated by the arrow A.

In Figures 17 and 17a we disclose the electrodes arranged in convergent planes so that some portions of the surfaces of the discs were closer together than other portions, the purpose being to further allow for adjustment in distribution of the grit particles.

The grit particles entering this electrostatic field are subjected to a variation in potential gradient from 17 k. v. per inch to 34 k. v. per inch, or any other variation of the electrical potential gradient, depending upon the voltages employed, size of plates, etc.

The stream of mineral is allowed to fall into the zone whose gradient is about 19 k. v. per inch. There is in such circumstances apparently no tendency for the mineral particles to migrate toward the zone of high gradient, and the general dispersion and orientation of the particles is not materially interfered with and not materially different from that where the plates are substantially parallel, and the potential gradient therefore substantially uniform.

Successful results may be obtained with any of the foregoing arrangements, by the employment of an abrasive grit of a grade 1½ flint, preferably of a splintery nature.

We find that a higher electrical potential gradient may be maintained without disruptive discharge or so-called spark-over with flint, for example, than with other grits such as silicon carbide, inasmuch as in the same air space potential gradient and with the same relative quantity of grit introduced thereinto, the conductivity of silicon carbide, being higher than that of flint, tends to produce an increased tendency to spark-over or brush discharge, as it is sometimes termed, and care must in some cases be exercised to prevent the formation of a conducting path between the plates.

A method of overcoming this difficulty for certain purposes is shown in Figures 18 and 18a, wherein the two plates 93d and 93d were arranged on opposite sides of insulating plates 102 and 103.

While the employment of these plates finds value with certain minerals, there is no marked difference in the action of the electrostatic field with other minerals, and we have found this arrangement of Figures 18 and 18a to be of value in increasing the activity of flint, but of much less perceptible value in increasing the activity of silicon carbide, inasmuch as spark-over or brush discharge sometimes occurs which causes the greater part of the applied voltage to be built up across the insulation.

The observed motion of the particles was substantially the same with or without the insulation, but, as pointed out in the case of some abrasive particles, an increased activity without a resultant brush discharge was observed. The plates also serve as a means to mechanically confine the activity of the particles to the area within the plates.

Referring now more particularly to the form of the invention shown in Figure 19, it will be observed that here may be provided a form of the apparatus wherein the electrode plates are alternately connected to ground. In this form of the invention the plates indicated at 104 and 105 are connected by conductors 106 and 107 to the negative and positive sides, respectively, of sources of electrical difference of potential 108 and 109, that is, sources of potential being connected in series as shown.

A grounding switch is provided indicated generally at 110 and has its terminals 111 and 112 thereof connected to ground as indicated at 113, switching members 114 and 115 serving to alternately connect the conductors 106 and 107 with ground.

It will be seen from the form of the invention disclosed in Figure 19 that by the alternative grounding of the plates 104 and 105, the orienting force exerted on the particle is uniformly maintained by virtue of the maintenance of a constant gradient between the plates. Dispersion of the particles thus uniformly obtained by the use of the switching arrangement prevents

[fol. 762]

the bulk of the particles (which, it will be understood, are at ground potential when they pass into the zone of the plates) from being directed more to one plate than to the other.

The form of the invention shown in Figure 19 operates similarly to the form of the invention shown in Figure 9.

Reverting to the form of the invention disclosed in Figures 8 and 9, the structure there employed including a reversal of polarity does not include the insulating plates and these, under ordinary circumstances, are not required.

Under conditions shown in Figure 14 and without the use of insulation on the plates or between them, flint particles dropped into the field whose gradient was 18 k. v. per inch were fairly well oriented on the sheet but the distribution is not entirely uniform.

An increase in gradient from 18 to 17.5 k. v. per inch resulted in the production of a marked increase in the degree of orientation, but as well increased the inequality of distribution.

With abrasive grains of silicon carbide a limitation of the potential gradient was required so as to prevent dielectric breakdown.

The use of insulation on the plates serves to cause the mineral to be more evenly distributed, but it will be understood that some slight amount of orientation must be sacrificed owing to the slight reduction in the potential gradient caused by the employment of the insulating plates.

From the foregoing it will be observed that by adjustment of the electrostatic field value and/or adjustment of the plates with respect to the air space between them and/or their angularity with respect to each other, and/or the periodicity of polarity reversal, we are enabled to produce desired effects in the orientation and distribution of the grit particles on the sheet.

Where the particles are deposited on shingle material for the purpose of roofing shingles and the like, it will be observed that by causing them to lie flat on the adhesively coated sheets, such as an asphaltum adhesive sheet or the like, the employment of a lesser number of particles to cover a given area of the shingles is required.

Certain phases of the features of our invention dealing with other embodiments of the process and the apparatus are claimed in our application Serial No. 200,850, filed March 31, 1938.

We claim:

1. In the manufacture of granular coated sheet material comprising a backing and elongated abrasive granular material adhered thereto by an adhesive, the step of controlling the deposition of said granular coating material on said sheet whereby the major axes of substantially all of the particles of said granular material are uniformly arranged in substantial parallelism with respect to each other and to the surface of said backing sheet.

2. The process of coating which includes as steps thereof feeding a substantially continuous and extended length of carrier or backing and applying an adhesive layer to a surface thereof, and depositing on said adhesive layer pulverulent abrasive grit particles of elongated nature in respect of their major axes under the influence of an electrical field whose lines of force extend substantially parallel to the plane of said backing and substantially at right angles to the longitudinal axis thereof for causing said grit particles to assume positions with their major axes substantially parallel with the plane of said backing and perpendicular to an edge thereof and substantially normal to the effective working surface of the article to be made.

3. The process of coating which includes as steps thereof feeding a carrier or backing and applying an adhesive layer to a surface thereof, and depositing on said adhesive layer a pulverulent abrasive grit while passing said backing edgewise through a non-uniform electrical field whereby the particles are subjected to a variation in potential gradient as the backing moves through the field, said field tapering in intensity from one edge to its opposite edge.

RICHARD PAUL CARLTON.
THEODORE JOSEPH MILLER.

May 5, 1942. B. S. CROSS 2,281,558

MANUFACTURE OF ABRASIVE ARTICLES AND APPARATUS THEREFOR

Filed March 6, 1933 3 Sheets-Sheet 1

Fig. 1.

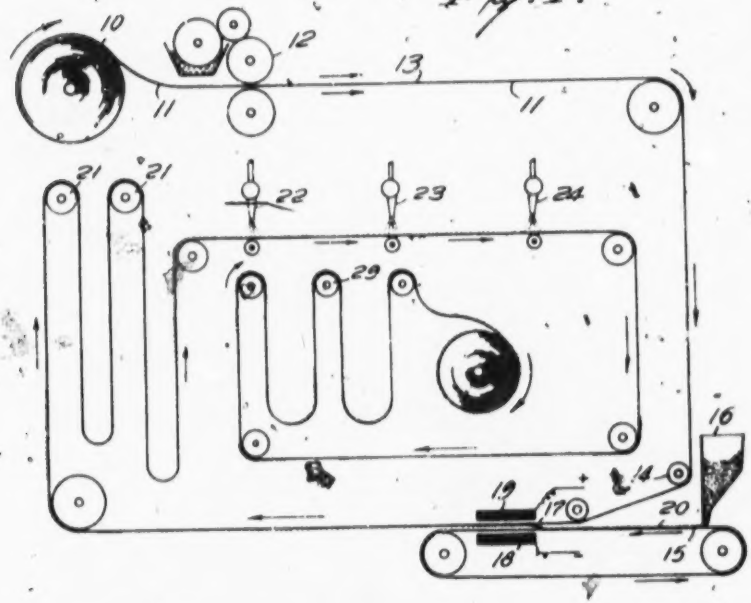

Fig. 2.

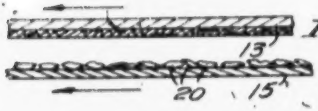

Fig. 3.

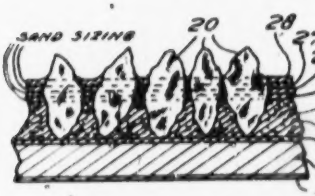

Fig. 4.

Inventor
Bert S Cross
By Paul Carpenter
Atty

[fol. 764]

May 5, 1942. B. S. CROSS 2,281,558

MANUFACTURE OF ABRASIVE ARTICLES AND APPARATUS THEREFOR

Filed March 6, 1933 3 Sheets-Sheet 2

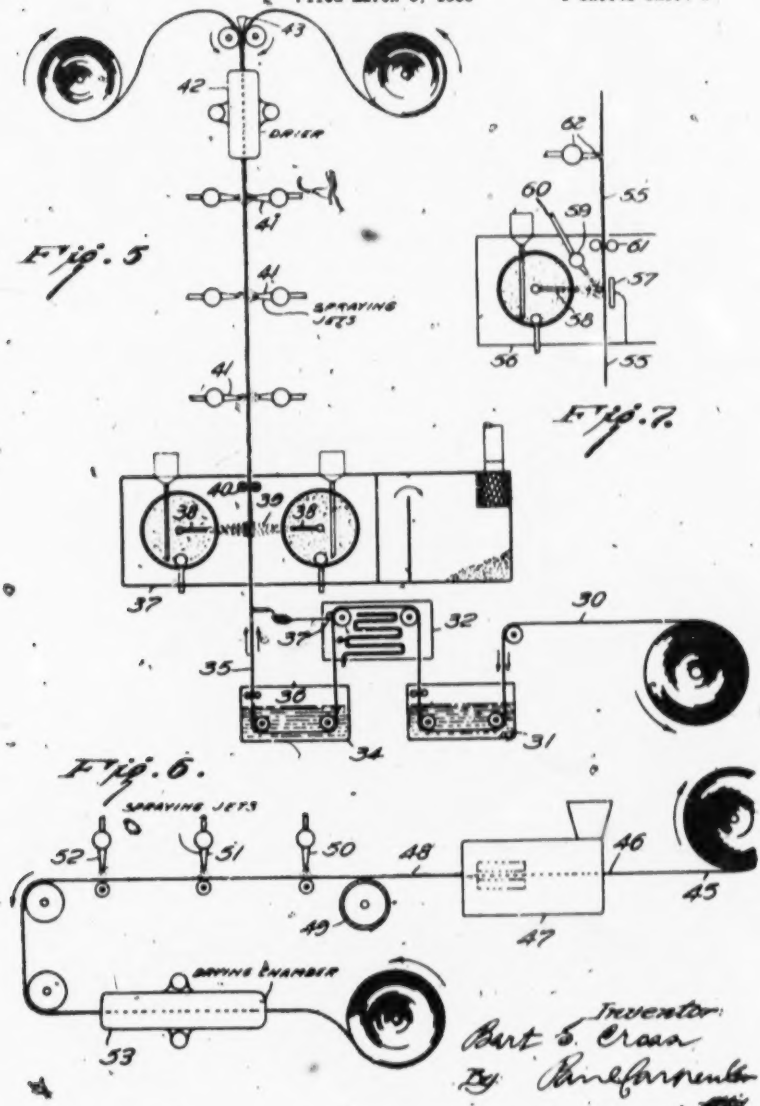

Fig. 5

Fig. 7.

Fig. 6.

Inventor
Bart S. Cross
By Paul Carpenter
Atty.

[fol. 765]

May 5, 1942. B. S. CROSS 2,281,558

MANUFACTURE OF ABRASIVE ARTICLES AND APPARATUS THEREFOR

Filed March 6, 1933 3 Sheets-Sheet 3

Fig. 8

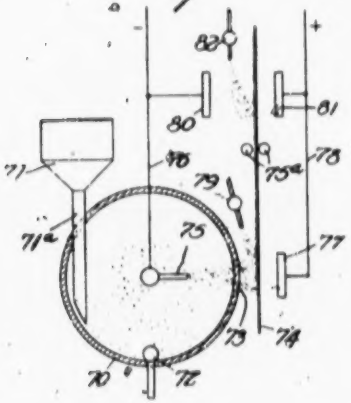

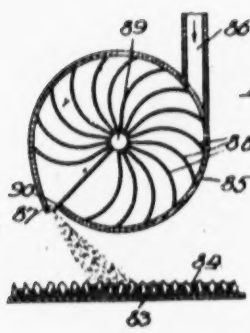

Fig. 9.

Inventor
Bert S. Cross
By: [illegible]
Atty

[fol. 766]

Patented May 5, 1942

2,281,558

UNITED STATES PATENT OFFICE

2,281,558

MANUFACTURE OF ABRASIVE ARTICLES AND APPARATUS THEREFOR

Bert S. Cross, St. Paul, Minn., assignor to Minnesota Mining & Manufacturing Company, St. Paul, Minn., a corporation of Delaware

Application March 6, 1933, Serial No. 630,353

11 Claims. (Cl. 91—68)

This invention relates to the manufacture of abrasives, to abrasive articles, and more particularly to such articles in the nature of sandpaper and the like.

It has been proposed to prepare abrasive articles in the nature of sandpaper by positioning the abrasive particles so that the abrading edges of maximum abrading efficiency are exposed by acting upon a carrier including a grit or layer of abrasive particles, with the abrasive particles in a mobile state, with an electrical field which orients, positions or deposits the abrasive particles so that a more efficient abrading surface is provided resulting from an arrangement of the abrasive particles with their longest axes more or less perpendicular to the plane of the carrier or backing material, thus exposing the sharpest edges of the abrasive particles. Such process, and the abrasive made in accordance with this method, are generally described in the applications of Carlton, Serial No. 432,965, filed Jan. 20, 1930, and the patent to Smyser, 1,788,600, and may be effectively used for my purposes, though other methods for more erectly positioning the abrasive particles are also suitable for my purposes.

The method of making abrasive articles in accordance with the above mentioned applications and patent, in the preferred practice as known to me, involves providing a carrier, such as a web of paper, cloth or the like with a surface coating of an adhesive material, and while the adhesive is in the active condition, depositing a grit or layer of abrasive particles, and simultaneously with the deposition, or subsequent to the deposition, subjecting the carrier and grit so deposited to the action of an electrical field, which more desirably positions the abrasive particles, or orients the same, so that the sharpest edges will be exposed at the abrading surface, and generally the particles will be positioned with the longest axes of the particles arranged more or less perpendicularly to the plane of the paper or carrier. Following this operation, the backing material or carrier, together with the binding coat and grit are exposed to finishing operations which set the binder coat partially or completely. Thereupon, the abrasive surface is given a sand sizing coat to seal any crevices which may be formed in the setting of the binder coat or to supplement any binder which may be lost due to the absorption or shrinkage of the binder, and furthermore, to more securely anchor the abrasive particles to the backing material.

The sand sizing operation, under the present process, may be flowed over the abrasive surface in relatively thin solution of the size coating material, by a doctoring or transfer roll operation, and the excess material is then wiped off, or otherwise removed, by passing the web through relatively flexible squeeze rolls or other wiping devices. The abrasive sheet so prepared is then matured, depending upon the character of adhesive material and sizing coat that is used.

While the aforementioned process produces desirable results, certain disadvantages are experienced in the care that must be exercised, affecting the speed of production, and under certain conditions of operation, having a tendency to disturb or alter the predetermined desirable position of the abrasive particles. Furthermore, where the binder coat is preliminarily applied to the backing material, such as the web of paper, cloth or the like, the thickness of this layer is calculated to be sufficient to fully anchor the abrasive particles, to properly hold the abrasive particles which are influenced electrically or electrostatically carrying the binder and grit, before submitting the same to an electrical field. This latter mentioned phase of the process may have a tendency to decrease the clearance angles of the abrasive edges, as well as to retard the speed of the orienting process.

By the aforementioned process for depositing or positioning the abrasive grit or particles, utilizing the influence of an electrical field, resulting in more or less erectly positioning the abrasive particles upon the surface of the web, the influence of the electrical field does not become instantaneously effective and an electrical charge may persist for a short period of time after passing from the influence of the electrical field, after which condition it is desirable that the abrasive grit or particles remain somewhat mobile, until the entire influence of the electrical field becomes dissipated, to desirably position the abrasive particles in a more or less erect position. Under such conditions of operation in depositing and forming the grit or layer of abrasive particles, a mobile condition of the abrasive particles is desirable and the finishing operation involving the increase of the binder coat and the application of the sand sizing coat or coats, if accomplished under the conditions of operation to maintain this mobile position of the abrasive particles and without a movement deterring or disturbing influence, facilitates the formation of a desirable abrasive article, as contemplated by me.

Furthermore, by prior methods of making sandpaper which involve flowing (or brushing)

or mechanically distributing one or more sand size coats upon gravitationally deposited grit or abrasive particles with the material necessary for forming the sand size coat in excess, no particular difficulty is encountered in wiping away or otherwise removing the excess material necessary for forming the sand size coat. However, when utilizing the hereinbefore processes for more erectly positioning the grit or abrasive particles by the influence of an electrical field, flowing of the sand size material in excess and then removing the excess material not only has a disturbing influence upon the position of the abrasive particles where the binder coat is unset, especially so where the binder coat has not been completely matured or set, but also the sand size coat or coats formed by this method increases the clogging tendency of the sandpaper with the erectly positioned particles by reason of the decreased clearance angle resulting from the deposition of the sand size coat material in excess and the difficulty in removal of this excess from the aforementioned positioned grit or abrasive particles.

It is contemplated by my present invention to materially increase the efficiency of sandpaper made in accordance with electrical deposition methods by combining therewith a method for applying a size coat or any number of size coats, which will be sufficient to finally anchor the abrasive particles in position, by applying the material forming the size coat or coats without disturbing the electrically or electro-statically deposited or oriented particles or submitting the particles to any stresses in applying the sizing coat, which may disturb the position of the abrasive particles upon the backing.

It is further contemplated by my invention to combine with existing methods for making an abrasive sheet which include preliminarily forming upon a backing material, including a binder and a grit or layer of abrasive particles, sizing coat or coats, a method for applying the sand sizing coat or coats which controls and limits the application of the sizing coat or coats and avoids the necessity for removing any excess by squeezing or wiping operations which may disturb the predetermined position of the abrasive particles.

It is a still further object of my invention to combine with methods heretofore used for forming an abrasive article in the nature of sandpaper, and the preliminary steps of anchoring a grit or layer of abrasive particles upon a web carrying a binding coat, a method for applying the requisite thickness of binder coat or sizing coat or coats by a spraying process which will permit the addition of the requisite thickness of binding coat or sizing coat or coats without excess, and without any tendency to disturb the predetermined position of the abrasive particles upon the backing material.

It is therefore, a still further object of my invention to provide a process which combines with the positioning of grit or abrasive particles upon a backing material or carrier operating under electrical influence, the application of a binder, sand size or plurality of sand size coats, while maintaining the mobile condition of the abrasive particles so that the effect of the electrical influence may be completely obtained and the sand size coat or coats be increased, without disturbing the particles or the influence of the electrical field upon the particles, until the requisite binder coat and auxiliary sand size coat or coats have been developed sufficiently, while in the finally matured article, results in an anchored abrasive material of proper abrasion resistance.

It is therefore still a further object of my invention to provide a method of depositing a size coat or coats upon an abrasive sheet including a binder coat having positioned thereon a grit or layer of abrasive particles more or less erectly positioned by the influence of an electrical field when the particles are in a mobile condition and building up the size coat or coats to the point sufficient to properly anchor the abrasive particles in the finally matured abrasive article, to resist the stresses in abrading operations and without excess which may objectionably increase the clogging tendency of the abrasive article, by atomizing or spraying the sand size coat or coats in extremely fine condition between the abrasive particles and upon the binder coat or underlying coats.

For the attainment of the aforementioned objects and such further objects as may appear herein or be hereinafter pointed out, and for a clearer understanding of the process herein involved, reference will be made to the accompanying drawings, forming a part hereof, in which—

Figure 1 is a diagrammatic illustration of one embodiment of my invention;

Figure 2 is an enlarged detail of a section of the web and belt before deposition of the abrasive particles;

Figure 3 is an enlarged detail of the same immediately after deposition;

Figure 4 is an enlarged detail in section, of a completed abrasive sheet as made in accordance with my process;

Figure 5 is a diagrammatic view of another embodiment of my invention;

Figure 6 is a diagrammatic view of a still further embodiment of my invention.

Figure 7 is a fragmentary diagrammatic view of a still further embodiment of my invention.

Figures 7 and 8 are fragmentary schematic views of alternative forms of a further embodiment of this invention, and Figure 9 is a sectional schematic view illustrating a still further alternative form of the invention.

Referring now to the drawings for purposes of illustrating one embodiment of my invention, 10 represents a roll of fabric material, such as paper, cloth or the like, which preferably has been given some sizing operation to waterproof the same. The web 11 then passes through applicating rolls 12, at which point a coating of binder material 13 is applied, of requisite thickness. Beyond this point, the web carrying the binder coat in a tacky condition is then reversely directed so that the adhesive surface 13 is downwardly disposed at 14, and passes above a traveling belt 15. This traveling belt is so formed as to receive a deposit or layer of abrasive particles from the hopper 16 containing the same. The traveling belt and web of paper are timed in synchronism and adjacent the point 17, when the web and traveling belt are in close proximity the web and belt pass between electrodes 18 and 19 respectively. These electrodes are connected to a suitable source of electrical energy of any desired voltage and thereby create an electrical field and cause the particles of grit 20 to be directed against the web 11, carrying the binder coat 13.

The exact form of the electro-deposition and the details of the apparatus therefor are not par-

[fol. 768]

ticularly herein claimed and no further detailed description will now be made, but it will be sufficient to point out that in my preferred method, a uniform distribution of the abrasive particles upon the backing is accomplished approaching more or less a single layer, though with the finer grits of 150 to 200 mesh, this method includes a deposition of multilayers.

Abrasive particles as supplied in the trade are of unequal dimensions, the axes of which are unequal and have abrading edges of different sharpness. The effect of the electrical field upon the abrasive particles as just described will serve to more desirably position the abrasive particles for abrading operations such as by having the sharpest edges exposed, or the longest axes of the particles arranged more or less perpendicular to the surface of the paper or web.

For purposes of convenience, this desirable positioning of the particles herein referred to as positioning the abrasive particles by an electrical field will be referred to as erectly positioned abrasive particles, and by this term I mean to include the effect produced in so arranging the particles that their most efficient abrading edges or points are away from the surface of the paper, whether the action is electro-static, electro-magnetic, or caused by any other method of orienting the particles with their most efficient abrading edges exposed in the final abrasive surface.

After depositing the grit or layer of abrasive particles by the electrical field, as described, the web of paper 11, carrying the adhesive surface 13 and the abrasive particles 20, are passed over festooning racks 21, to set the adhesive coating 13, and to assure that in the subsequent handling of the abrasive article thus far formed, the abrasive particles will hold their predetermined desirable position.

The web of paper, as it leaves the electrical deposition apparatus is guided over guide rolls to the festooning racks 21, as just described, so as to minimize any contact with the surface of the web carrying the abrasive. At such points where the surface of the web carries the abrasive, the guide rolls contact the web at the edge thereof.

The festooning racks as just described are particularly desirable in connection with a binder coat, using an adhesive material dissolved or dispersed in a volatile vehicle, such as, for example, a mixture of resin and drying oils, in a volatile solvent, such as a petroleum distillate, of which oleum spirits, naphtha are examples. The setting action may be accomplished by other means, depending upon the nature of the adhesive material, which will, for purposes of more fully illustrating applicant's invention, be hereinafter referred to and exemplified.

With an oil resin and solvent coating 13 and abrasive particles 20 as hereinbefore applied, the festooning operation may be continued for a period of about twenty-five minutes, or a period of time wherein the major proportion of the volatile solvent will be removed and the residuum become materially thickened, approaching a solid state. The nature of a binder of this character may be one made in accordance with the patent application of Okie, Serial No. 336,[illegible], filed February 6, 1929, and may further include sufficient heating or baking treatment to ensure sufficient setting of the adhesive material.

The web as thus far prepared or, if desired, before partial drying by the festooning racks, is then brought in proximity to spray jets 22, at which point a fine atomized spray of sizing material is deposited upon the web of paper carrying the abrasive particles. The plane of the paper at this point, in relation to the spray jets is such as to ensure the spray striking the web of paper substantially at right angles for the major area covered by the spray. The force of the spray is such as to give very little lateral action, or have any tendency to disturb the position of the abrasive particles, and to further ensure an even and uniform distribution of the sizing material between the particles of grit.

It will be understood that the spray jets shown at 22, 23 and 24 may be connected to a single source of supply of coating material or may be connected to different sources so as to deliver subject to suitable control sizing coating materials of different degrees of hardness or flexibility when dried in order to produce, if desired, an article having constituted adhesive coatings of different degrees of hardness and/or other characteristics when set.

The spray jets may be arranged as shown at 23 and 24, so as to increase the binding material between the grits to the requisite depth for properly anchoring the abrasive particles upon the web, with sufficient strength to resist displacement in abrading operations. The web may be passed beneath the spray jets to give any number of sizing coats, as more clearly illustrated in the enlarged detail shown in Figure 4, wherein 25, 26 and 27, and 28, show successively a plurality of sizing coats. The sizing coat or coats are applied to sufficiently anchor the abrasive particles upon the backing, to resist the stresses encountered in abrading operations, when the web is finally matured, but without excess, which may impair the clearance angles and abrading efficiency of the abrasive particles. This is accomplished by using an extremely finely atomized spray and the sizing material solidifying more or less in an extremely thin coat. This coating may be increased in number to require no removal of excess material. The web then passes to festooning racks or dryers 29 for maturing the web so prepared.

In another embodiment of my invention, as more particularly illustrated diagrammatically in Figure 5, the duplex web 30 of paper, cloth or the like, is fed into a vat 31, which contains a coating composition in which there is disposed electrical conducting material. This may be finely suspended graphite, a bronzing powder, a water solution of some electrolyte, such as salt, or similar material. The web is then conducted into a drying chamber 32, to set the preliminary coating and to take off any extraneous fluid. Adjacent the outlet of the drying chamber, the web makes contact with an electrode 33. From the drying chamber, the web is passed into a second vat 34, where the fabric is given a coating of adhesive material 35. The excess adhesive material is controlled by the excess rolls 36, which also adjust the thickness of the binder upon the web of material. The web then passes to the grit deposition chamber 37 of the character more particularly described in the patent to Smyser, No. 1,7[illegible].

In this embodiment of the invention, as the web with the adhesive still moist and tacky, passes between the electrodes 38, the electrostatic discharge bombards the binder coating with electrically charged particles of abrasive material 39. This operation serves to position

the particles of abrasive material upon the binder carried upon the surface of the web so that the most efficient abrading edges of the abrasive particles are exposed, and in general, the particles are oriented with their largest axes substantially perpendicular to the plane parallel to the surface of the paper. The speed of the movement of the web in relation to the points between the electrodes 38 determines, with a given size of abrasive particles, the character of coating. Though the coating may be one to provide plural layers of abrasive particles on the web of fabric, it is preferred by me to adjust the thickness of the adhesive layer, the speed of movement of the web in relation to the electrodes and the character of the particles of abrasive material so that substantially a single layer of abrasive particles is coated upon the web, to produce an article in the nature of sandpaper.

With a web thus prepared, and while the adhesive is still moist, the web is passed through edge guiding rolls 60. While the adhesive may be suitably set, in accordance with the prior embodiment, I may directly pass the web through a series of jets 61 arranged to spray the full width of the web of paper, at which point a finely atomized spray of sizing material is directed against the web coated with the abrasive surface. While the spray coat of sand size may be accomplished by a single spraying operation, it is preferred by me to apply successive coats of sizing material, to gradually increase the binding material between the particles of grit, until the size coatings are built up to properly anchor the abrasive grit or particles to the backing material, yet without excess which may interfere with the proper clearance angles and abrading efficiency of the abrasive particles. The web then passes through a drying chamber 62, to partially set the web thus prepared.

After the web passes through the drying chamber, it is conducted adjacent to a knife 63, wherein the web of paper is separated. The two branches of the web thus split are separately formed into rolls or they may be conducted to other apparatus for finishing the same, such as for applying a back size before the entire web is passed through a maturing process, depending upon the character of adhesive that has been used.

In the process as described, the web of fabric is made with an abrasive layer 39 on opposite sides of the web and this may, under one phase of my invention, be practiced in order that an equalized discharge be obtained. However, it will be readily understood that in the coating process for applying the adhesive, only one side of the web may be coated with the adhesive material, to thereby produce a single web of abrasive fabric.

In the formation of an abrasive in the nature of sandpaper, as aforementioned, the binder coat 38, formed over a paper size coat or directly upon the backing, may be of a glue or protein base material, suitably waterproofed, if desired, by an insolubilizing or tanning operation, such as formaldehyde, tannin, potassium chromate, or it may be of a waterproofing material of oily or resinous constitution or combinations thereof, made and applied by way of example, in accordance with United States patents to Okie Reissue 17,593, Okie Reissue 17,594, Carlton 1,736,934 and Carlton 1,775,631 and others assigned to the Minnesota Mining and Manufacturing Company. The character of the binding coat, in one phase of my invention, determines the character of treatment to be given to this coat immediately following the deposition of the grit or abrasive particles, and preceding the application of the sand sizing coat or coats.

In order to more expeditiously practice the finishing of the sandpaper in accordance with my process, for purposes which will appear hereinafter, the binder coat that is applied before depositing the grit or abrasive particles, is of a thickness which will be just sufficient to hold the abrasive particles against gravitational displacement. This procedure not only reduces the time element in positioning the grit or abrasive particles by an electrical field, and permits the electrical field to more effectively orient the abrasive particles in the desirable position aforementioned upon the backing, but also provides a film which may be very rapidly set, to hold the grit or abrasive particles in the desirable position during the time that they are submitted to the spray coat of sand size. And I consider, as one phase of my invention, to deposit grit or abrasive particles upon a backing material carrying a binder coat of a minimum thickness to hold the grit or abrasive particles against gravitational displacement, followed by spraying of the sand sizing coat or coats, as this thin film of binder coat will respond more rapidly to the maturing treatment, and therefore more readily, firmly hold the abrasive grit in the desirable position resulting from deposition by an electrical field, and therefore permitting a more rapid application of the spray coats by a heavier and more powerful blast of spray, necessary for applying the sand sizing coat or coats.

In the embodiment illustrated in Figure 5, using a finely atomized, rapidly drying spray for applying the size coat, this size coat may be applied before the binder coat has set to any appreciable extent and, by proper adjustment of the spray, immediately following the electrodeposition of the grit or abrasive particles.

In the aforementioned methods and by the installation as described, reference has been made to partially or completely setting the binder coat before spray coating the sand size and that the character of the setting treatment would be dependent upon the character of the binder used. Thus, the binder coat may be a normally solid material which is sprayed in a volatile solvent, and setting or partial setting may be effected by partial vaporization of the volatile solvent. Furthermore, the spray coats issuing from the nozzles 61 may have different characteristics as to degrees of hardness or flexibility when finally set as hereinabove pointed out.

In another embodiment of my invention, as more specifically illustrated in Figure 6, a web of backing material, such as paper, cloth or the like, preferably after first sizing the same, is given a binder coating 66, of heat responsive material, using substantially no volatile vehicle. Such material may be a properly heated shellac or resin, artificial resin, waxes or gums, which generally may be maintained fluid by heating, but which, upon cooling, rapidly solidify. Under these conditions, the web carrying the binder coat 66 is passed into a chamber 67, which is kept at temperatures sufficient to maintain the binder layer 66 in a fluid or semi-fluid condition.

Under other conditions of operation, the heat responsive material may be one which sets, hardens or rigidifies on heating. Such materials, I may exemplify as albuminous adhesives of the character of egg albumen or blood albumen, and

[fol. 770]

other similar coagulable materials, such as, for example, latex, viscose containing a weak acid solution admixed therewith in noncoagulating proportions at ordinary temperatures. Under these conditions, using the heat coagulable material or materials rigidifying under increased temperatures, the chamber 47 is maintained at atmospheric temperatures.

Within the chamber 47, the web with the adhesive coating 46 in its tacky consistency, is given a deposit of grit or abrasive particles 48 and is submitted to the process for erectly positioning these abrasive particles in accordance with any of the methods aforementioned and more specifically described, for purposes of example, in the application of Carlton, Serial No. 422,005, and the patent to Smyser, No. 1,758,998. The web then passes over a roller 49, to rapidly set the binder coating. The roller 49 has provisions for being either chilled or heated. The chilling fluid is used where the binder coat 46 is of a nature which responds to a reduced temperature to rapidly set and solidify, and where materials, such as those hereinabove referred to, responding to reduced temperatures to rapidly set or solidify, are used. Where the binder material used is one which is heat coagulable, the roller 49 is connected with suitable heating means such as steam, to maintain the roller at a temperature sufficient to rigidify, coagulate or otherwise set the binder coating.

It will be understood that the time element of contact between the web as it contacts with the roller 49 may be such as to effect the purposes hereinbefore referred to, of rapidly setting, solidifying or stiffening the binder coating.

It is further understood that the nature of the binder as originally applied for my purpose, prior to the entry into the chamber 47, is one that is sufficient for forming a binder coat for holding grit as made by a pure gravitational deposition method, but is insufficient, in the finally matured article, to hold erectly positioned abrasive particles, and for purposes of more rapidly passing from the grit deposition step to the sizing steps which will hereinafter be described, the binder coat is preferably applied of a thickness which will be the minimum necessary to hold the particles against any gravitational tendency to displace the same from the erect position previously referred to. This minimum coating up to the quantity found proper for an ordinary gravitationally deposited grit, is of value for purposes previously described and also shortens the time necessary for setting the binder coat, so that the web may be immediately subjected to the spraying process.

In the embodiment illustrated in Figure 6, the web, treated in accordance with the process just described, is subjected to a spray of sand sizing material by the jets 50, 51 and 52. These jets emit a fine, atomized spray of sand sizing material. The sizing material may be an ordinary glue-base material, where glue bond sandpaper is to be made, or it may be in the nature of a waterproofing material. Preferably, and by way of example, the flexible waterproofing materials made in accordance with the patents to Carlton and Okie, aforementioned, may be used so that a resinous, oil-resin, cellulose compound, such as nitro-cellulose, preferably modified by a polyhydric resinous material, cellulose acetate, may be used as the base. These resinous materials which may be rendered liquid by heat are so used. In general, however, I prefer to use the materials in a volatile solvent or vehicle. Additionally, also, aqueous dispersions of rubber, such as latex and similar materials, halogenated rubber and isomers of rubber, such as described in the applications of Hatch, Serial No. 318,390 filed Nov. 18, 1928 and Hatch and Netherly, 418,148 filed Jan. 2, 1930, may be used.

The ingredients that are used for sizing the paper, formation of the binder coat and the sizing coat or coats, need not be of the same materials and flexibility and may be varied by use of a gradiently harder binder and sand size materials. In general, coating materials which are compatible with each other are used.

Where a rubber sized paper is used, a resinous material or resin bond, oil and resin sand size are compatible. For an oil-resin binder coat, nitro-cellulose, preferably modified by a polyhydric resin in a common solvent, is compatible.

In using any of the coating materials, suitable adjustment is made of the temperature of the sizing material or the solvent used, so that an exceedingly fine spray may be deposited, and additionally, adjacent the point where the spray strikes the web of material, temperature conditions may be maintained so that the atomized particles strike the web in a more or less solidified or thickened condition, so that the binder or sizing coat or coats are almost in a fairly concentrated condition. Thus, with a hot liquid resinous material for the sand size, the web may be maintained approximately at a temperature at which the resinous material will begin to solidify, thicken, or concentrate to a substantial extent. For a sizing material including a volatile vehicle, temperatures adjacent the spraying zone may be raised to increase the volatilization of the vehicle.

In the application of the sizing coat or any number of successive coats by the jets 50, 51 and 52, no excess material will be applied and the spray coats may be controlled below that thickness at which the size coat would ordinarily interfere with the abrading edges of the abrasive particles, and serve to increase the clogging tendency of the abrasive article, when used in abrading operations.

To exemplify the conditions of operations where successive sprays of binder coats and sizing coats may be applied to leave the grains of abrasive particles well supported, reference will now be made to various conditions of operation. Where I have indicated sprays 22, 23, 34, 41, 52 and 53, these sprays may be the spraying nozzle of a spray gun of a character known on the market as the No. 15 Apex Spray Gun, adapted to project a fan shaped spray about six inches wide and about one-half inch thick. With such type of apparatus, it is preferred by me to hold the nozzle about eight inches from the web to be treated and direct the same at an angle of approximately 90° to the work.

For purposes of projecting a glue binder upon a web, air pressure between 60-75 pounds is used, and discharged at about room temperatures of 65-80° F. The glue solution was preferably maintained at about a temperature of 150 to 180° F., though temperatures of 95-130° F. are operable. The concentration of the glue, using a hide glue, should preferably be below 10%, where hide glue of 105 millipoise is used. With lower grades of glue, however, of from 60 to 105 millipoise, concentrations as high as 15% may be used.

The conditions above given for glue, with the variables that may be encountered, are prefer-

ably maintained to work in the direction of the flood coat and a tendency for the sprayed particles to thicken upon deposition, yet below the limit where there is any tendency to form any caps upon the cutting edge of the grains, and the force of the spray, especially under the conditions above described, in addition to the force of the spray, tends to consolidate and unite the particles of spray into a unitary mass. Variables which cause such rapid solidification of the spray particles to an extent that the formation of round caps appears, is avoided.

While I have indicated that with compressed air and temperature conditions above indicated concentrations of glue as high as 10% may be used for the high grade glues and concentrations as high as 15% with low grade glues, still higher concentrations may be used. Under these conditions, however, steam at about 50–70 pounds pressure may be substituted for the compressed air, and utilize a glue concentrate of about 21%. This may be used without any evidence of glue caps on the abrasive particles.

It will be understood that the rate of evaporation, viscosity or concentration of the fluid, surrounding temperatures, humidity, distance of the spray from the work and the material used, are all variable factors which are varied from the conditions aforesaid and will require suitable adjustment, and the desirable condition of operation may be ascertained in a general way, maintaining the condition of the spray preferably between limits showing a definite concentration of the material sprayed and below the point where variations may cause the formation of caps.

For using a waterproof material and an organic solvent, clear lacquer of a base may be used. This is preferably thinned with an equal quantity of a thinner for the lacquer and a spray gun is operated at air pressures of from 45–60 pounds, though pressures as high as 75 pounds may be used. Again, the variables, such as the surrounding conditions, as above emphasized, may require adjustment of the spray to project a coating of more concentrated or thickened condition, the formation of caps upon the abrasive particles at their points being the limiting conditions in the direction of operating the spray for forming a more viscous or concentrated deposit.

With a glue base material of the character described, and operating conditions as described, approximately four coats may be given. With the waterproof type of lacquer, as many as ten coats may be given. It will be understood that the grit size and the character of grit and the other variable conditions indicated may also qualify the number and nature of the spray coats that may be applied.

By applying the size coat or coats in accordance with the method described, by a finely atomized spray of the size coat material and under the conditions which will cause the residuum carried in the spray to quickly solidify, a web of material carrying erectly positioned abrasive particles may be provided with the anchoring coat or coats, without an excess, which would ordinarily tend to increase the clogging tendency of the finally formed abrasive article.

After leaving the points at which the spray coats are applied, the web may then be passed over festooning rolls, or other means for partially or completely maturing the abrasive article, such as by passing the same through a drying chamber 53, from which point it may be formed into rolls for more convenient handling, for subsequent complete maturing, or if sufficiently matured in the drying chamber, to be held for subsequent severance in the form in which the abrasive article will find its way on the market.

Though I have described in the embodiments illustrated, the application of a binder coat followed by the application of sand sizing coats for an embedded grit or abrasive particles which have been erectly positioned the method may include substantially simultaneous deposition of the binder coat and deposition of the grit by the influence of an electrical field and the apparatus diagrammatically illustrated in Figure 5 is admirably suitable for this purpose, as I may, adjacent the electrodes 56, include spray jet or jets for simultaneously applying a binder material while the sheet is bombarded with abrasive particles. An extremely finely atomized spray material using either no solvent at all or a non-inflammable solvent is preferably used; in this form of operation, the binder coating operation may be entirely omitted or reduced to the minimum.

For purposes of illustrating the method briefly aforementioned, reference will be made to Figure 1. In this construction, a backing material 58 is conducted into a chamber 56, of substantially the same character as that illustrated in connection with Figure 5. In this embodiment, the backing material need not be coated with an electrical conducting material, but is preferably surface sized, with a suitable sizing material compatible with the binding material hereinafter used. The right hand electrode 36, illustrated in connection with Figure 5, may be omitted, and in its place there is substituted a grounded electrode 57, disposed at a point opposite to the grit dispersing electrode 56, of the same general construction as described in the previous embodiment shown in Figure 5. Adjacent the point between the electrodes 57 and 56, there is positioned a spraying nozzle 59, preferably to lead off from a line 60 connected so as to be operable with such spray nozzles of the character noted at 51 in the embodiment shown in Figure 5, or formed as part of a series of chambers, such as shown in Figure 3.

The operation for electrostatically bombarding the web of paper in accordance with the embodiment illustrated in Figure 7 is accompanied by simultaneously spraying the particles and the web of backing material 58. The highly dispersed particles formed by the mist or spray of atomized particles of binding material do not interfere with the desirable position of the abrasive particles. The binding material as applied by means of the spray is preferably so adjusted that upon striking the backing material, the coalesced particles will reach a more or less thick liquid or semi-solid state, to effectively hold the particles of abrasive material in the predetermined, desired erect position.

After passing the point between the electrodes 57 and 56 and the spray nozzle 59, the web is conducted between guide rollers 61. These are preferably edge rollers which do not interfere with the surface coating of binder material and abrasive particles, though for purposes of compacting the surface, where a built-up layer is desired, the rollers 61 may be extended for the full width of the web.

It will further be observed that care is exercised to carefully insulate the rollers 61 so that discharge occurs between the electrodes 57 and 56, and not from the paper through the rollers 61.

[fol. 772]

After passing from the chamber, the web 86 and its coating of abrasive particles may be given one or more sizing coats by the spraying nozzle 93. One or more of such nozzles may be used to build up the sand sizing coat, or the web may pass progressively through a series of chambers, such as 86, to progressively build up any number of layers of abrasive particles, so that the web may have any desired thickness of abrasive particles, or the abrasive particles may be built up to any desired thickness upon the carrier, by moving the carrier at a relatively slow rate between the electrodes 87 and 88, and the spray nozzle 93, associated therewith.

In the embodiment illustrated in connection with Figure 7, novelty is attributed not only to spraying of erectly positioned particles upon a backing material, but the simultaneous deposition of the abrasive particles and the atomized binding material. The novelty of this embodiment of the invention I attribute not only to simultaneous application of the binder coat and the grit to more facilely permit of an erect positioning of the abrasive particles, but to an ability to continuously and progressively build up the layer of abrasive particles without waiting for the binder coat to set or dry, permitting either an additional coating or coatings of sand sizing material, or other abrasive particles and binding material to be applied.

Referring now more particularly to Figure 8, there is provided a container or chamber 70 conveniently cylindrical in contour similarly to the chamber shown in Figure 7. Comminuted abrasive material is supplied to the chamber 70 from a hopper 71 through a tube 71a.

An air blast may be introduced into the chamber 70 at 72 for creating a cloud of abrasive material therein.

At one portion of the container or chamber 70 I provide an outlet 73 and past this outlet 73 there is fed the fabric backing 74.

Within the chamber 70 I provide an electrode 76 which is connected by conductor 76 to one side of a suitable source of high voltage and in substantial alignment axially with the electrode 76 I provide an electrode 77 back of the fabric 74 and connected by suitable conductor 78 to the opposite side of the source of high voltage.

It will be observed that the source of relatively high potential through the medium of the electrodes 76 and 77 establishes an electrostatic field of desirable strength between these two electrodes. It will be understood that to simplify the diagram the conductors 76 and 78 have been shown in parallel relationship, but it will be understood, of course, that these electrodes will be kept at a sufficient distance apart so that disruptive discharges cannot occur or other leakage of current which would tend to decrease the electrostatic field sought to be established between the electrodes 76 and 77.

A spray nozzle 79 is provided arranged similarly to the nozzle 93 shown at Figure 7 and adapted to direct an atomized adhesive into the zone of the electrostatic field so that in addition to the mechanical deposition of the adhesive an electrical deposition of adhesive takes place. This prevents undue deposition of adhesive on surrounding parts of the apparatus and ensures that the major portion of the adhesive as desired reaches the sheet or backing 74 preferably simultaneously with the deposition of the abrasive thereon.

The fabric with the coating of adhesive and abrasive thereon then passes from the zone of the electrostatic field established between the electrodes 76 and 77 between edge guiding rollers 79a and thence passes between supplemental electrodes 80 and 81. At the electrostatic field thus established between the electrodes 80 and 81 I provide an auxiliary nozzle 82 adapted to spray into the electrostatic field, but not toward the fabric 74, an atomized stream of adhesive material which may be deposited by the action of the electrostatic field as a sizing coat upon the abrasively coated fabric 74.

In view of the fact that the spray produced from the nozzles 79 and 82 is finely comminuted and of relatively low concentration as to conductive adhesive, it will be understood that the spray produced at this point both with respect to Figures 7 and 8 does not tend to materially reduce the strength of the electrostatic field, even where moisture containing adhesives, such as glue, are employed instead of non-conductive waterproof adhesives.

It will be understood that by disposing the auxiliary nozzle 82 at the angle shown, an improved dispersion of the finely divided adhesive particles is produced resulting in a more uniform distribution of the adhesive upon the web.

Referring now to Figure 9, here an alternative form of commuting means is disclosed for the treatment of the adhesive and for depositing the same on the web 83 containing the abrasive particles 84.

In this form of the invention there is provided a drum 85 having an inlet 86 for delivering a fluid adhesive to the interior of the drum. The drum is provided with outlet 87 whose axis of discharge is directed toward the grit coated sheet 83.

A brush having relatively stiff bristles indicated at 88 is arranged within the drum 85 so that as the brush is rotated in the direction indicated by the arrow the bristles will take up adhesive from the inlet 86 and as the bristles strike the edge 89 of the drum adjacent to the outlet 87 the adhesive in liquid form will be thrown as a fine spray on to the adhesively coated sheet.

It will be understood that this form of the invention may be adapted for use with any of the previous forms hereinabove described and, of course, in some circumstances, it will be necessary to mount the brush below the web, in which event appropriate modification may be made for supplying the adhesive under pressure sufficient to cause it to flow through the inlet 86 to a point adjacent to the bristles of the brush.

Thus, by the centrifugal force of the brush revolving the adhesive particles picked up by the bristles of the brush will be caused to be projected forcibly in a cloud form toward and on to the surface to be coated.

Not only does the spraying operation as above described penetrate between the particles of abrasive material, by reason of the use of the spray, but where an inert atmosphere is used, these particles also become electro-statically charged and more effectively impinge upon the web of backing material, and therefore more securely and effectively unite the abrasive particles.

In some cases it is desirable to employ a binder and sizing coats, materials which do not deform materially when set, and, therefore, do not, either by capillary action or in course of hardening to a flexible state, cause a displace-

ment of the grit particles from the desired oriented positions. For this purpose I have found to be suitable the phenolic resins and other synthetic or artificial resins, such as urea resins, oil resin mixtures wherein the metering steps are conducted so as to prevent the displacement of the electrically oriented particles by controlling the viscosity during the interval of setting.

Having thus described my invention and illustrated its use, what I claim as new and desire to secure by Letters Patent, is:

1. The method of forming abrasive coatings upon a carrier, the steps which include simultaneously dispersing the abrasive particles upon the carrier and applying an adhesive material in a volatile vehicle in the form of a spray impinging upon the abrasive particles in transit to the carrier, while maintaining the spray of adhesive material under conditions tending to solidify and concentrate the same but below that at which a tendency to form caps of the adhesive material upon the abrasive edges of the abrasive particles is observed.

2. The process of applying coatings which includes the steps of dispensing and depositing a plurality of solid particles on a surface by the action of an electrical field, and depositing thereon in dispersed condition an adhesive material for binding said particles by the action of an electrical field.

3. In a coating apparatus, means for electrically projecting and dispersing a plurality of abrasive particles to form an abrading surface, and means in proximity converging with said first projecting means for mechanically and electrically applying and dispersing an adhesive material for retaining the particles in predetermined position on said surface.

4. In a coating apparatus, means for supplying abrasive and adhesive materials, and means for electrically projecting and dispersing simultaneously said abrasive and adhesive materials to form an abrading surface.

5. In a coating apparatus, means for supplying abrasive and adhesive materials, and means for electrically projecting and dispersing simultaneously said abrasive and adhesive materials to form an abrading surface, and means for supplementally electrically depositing and dispersing an adhesive material on said surface.

6. The process of producing an abrasive article which includes as steps thereof depositing and dispersing abrasive particles on a carrier by the action of an electrical field to cause the abrasive particles to assume oriented positions on said carrier with their major axes substantially perpendicular to the plane of the carrier, and simultaneously while intermingling with the dispersed particles of abrasive materials in transit to the carrier spraying an adhesive material upon the carrier to converge with the deposition of the particles in transit to the carrier, under conditions which cause a relatively rapid setting thereof for retaining said abrasive particles in their oriented positions on said carrier.

7. The method of making abrasive coated products which comprises as steps thereof directing a mixture of abrasive grains and a solvent free, thermoplastic binder in finely comminuted form upon a backing maintained with an adhesive coating, to impinge the abrasive particles upon said adhesive coating and to cause said mixture to adhere to the backing, while said coating is adhesive and, under conditions of plasticity of the adhesive and binder to cause the binder to adhere both to the grains, and the adhesive carried by the backing.

8. The method of making coated abrasive products which comprises applying to a backing a base coating of liquid adhesive, adding a thin layer of abrading grains to the adhesive coated surface while said coating is in an adhesive condition and applying a sizing coating of substantially solvent free thermoplastic resinous adhesive material in comminuted form to adhere the same by impingement thereon, whereby the time necessary for setting the coated abrasive product by the thermal changes is reduced, and a substantial proportion of the abrasive grains thereon remain with exposed edges.

9. The method of making abrasive coated products which comprises attaching a thin layer of abrasive grains to a backing by a base coating of liquid adhesive, applying a sizing coating of a substantially solvent free thermoplastic resinous adhesive material in finely comminuted particle form, to supply a full quantum of binder for anchoring the grains and by the impinging movement thereof to cause said particles to become attached to the abrasive grains and to become united with the base coating of liquid adhesive.

10. The method of fabricating coated web material which comprises applying a base coating of liquid adhesive to a surface of the web, applying a layer of abrasive particles to the adhesively coated surface, moving the abrasive-coated web into an electrostatic field, moving sizing material of solvent free material in finely comminuted form into said electrostatic field, electrically dispersing and projecting said finely comminuted sizing material onto the abrasive coated web prior to curing said base coating of liquid adhesive and thereafter curing both the previously applied liquid adhesive coating and finely comminuted sizing coat in one operation.

11. The method of manufacturing abrasive coated sheet material which comprises coating a surface of sheet material with a liquid adhesive, applying a layer of abrasive granules to the adhesively coated surface, projecting a layer of sizing material of solvent free material in finely divided form onto the abrasive coated sheet prior to setting the said liquid adhesive so that the sizing material becomes adhered to the liquid adhesive coating and thereafter curing both the layer of liquid adhesive and finely divided sizing material in one operation.

KENT S. CROSS.

[fol. 774]

Aug. 22, 1944. J. O. AMSTUZ 2,356,489

APPARATUS FOR COATING

Filed Aug. 19, 1939 5 Sheets-Sheet 1

Fig. 1a.

Fig. 1.

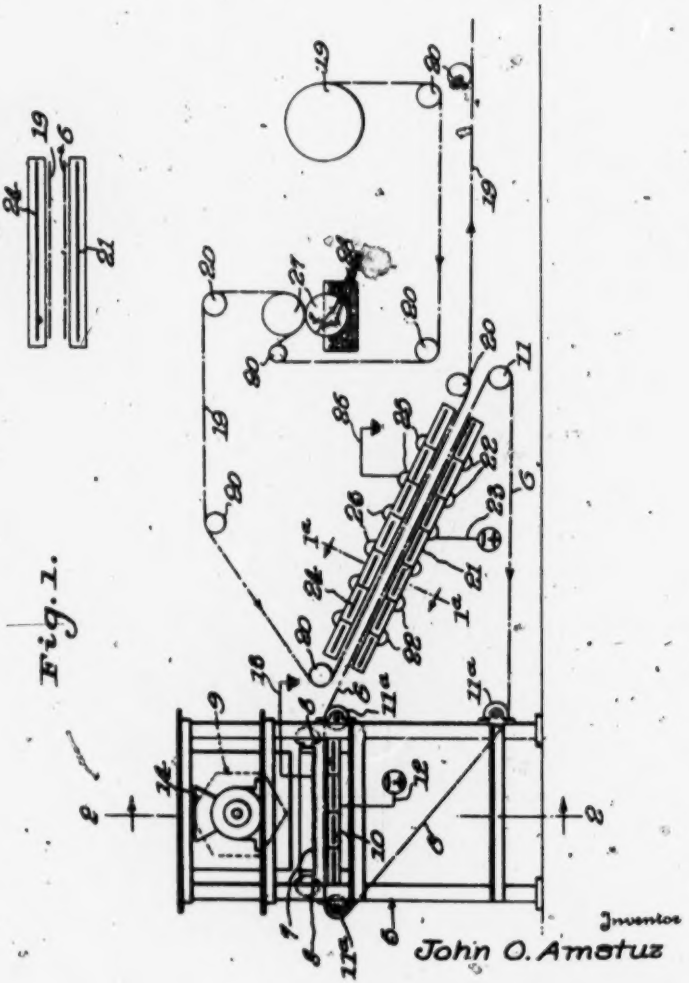

772

[fol. 775]

Aug. 22, 1944. J. O. AMSTUZ 2,356,489

APPARATUS FOR COATING

Filed Aug. 19, 1939 5 Sheets-Sheet 2

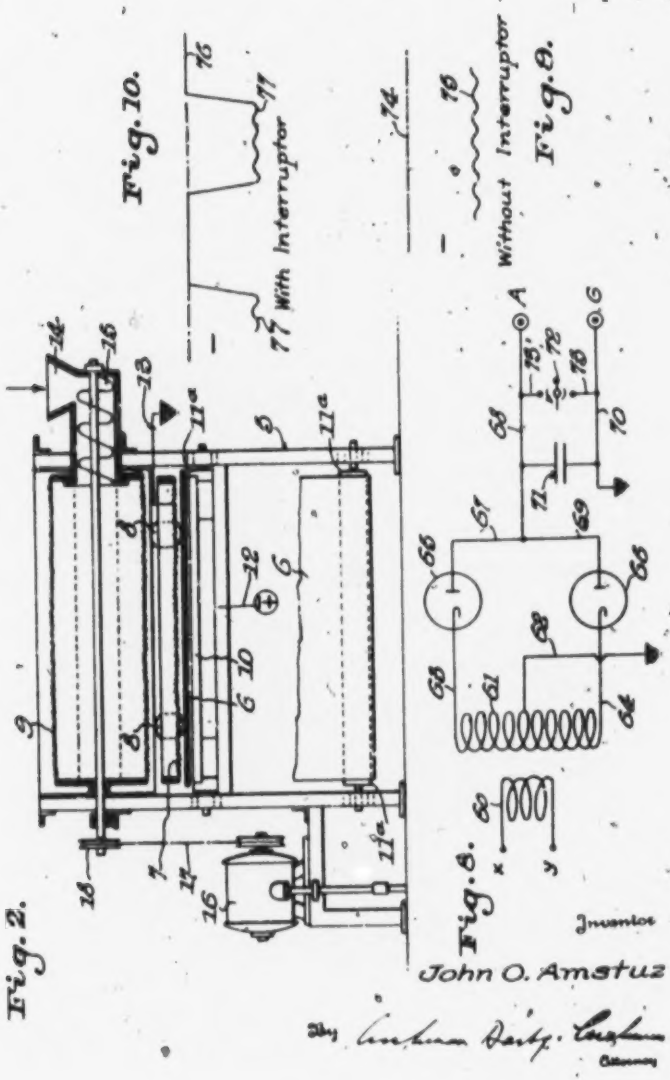

[fol. 776]

Aug. 22, 1944. J. O. AMSTUZ 2,356,489

APPARATUS FOR COATING

Filed Aug. 19, 1939 5 Sheets-Sheet 3

Fig. 11.

Fig. 5.

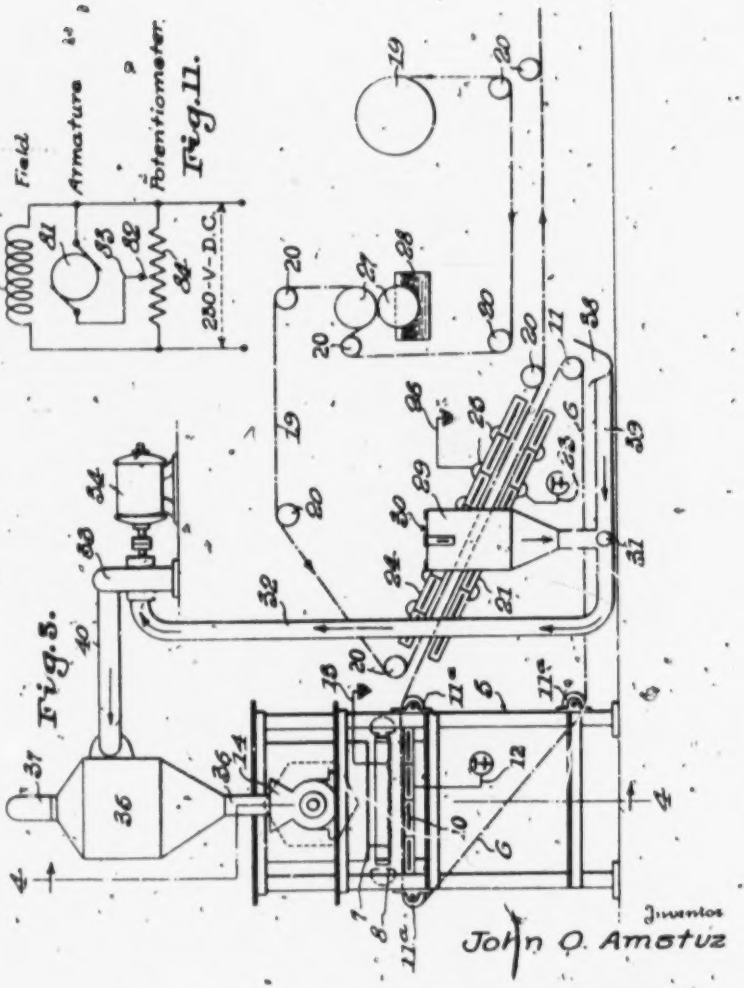

Inventor
John O. Amstuz

By Cushman Darby & Cushman
Attorneys

774

[fol. 777]

Aug. 22, 1944. J. O. AMSTUZ 2,356,489

APPARATUS FOR COATING

Filed Aug. 19, 1939 5 Sheets-Sheet 4

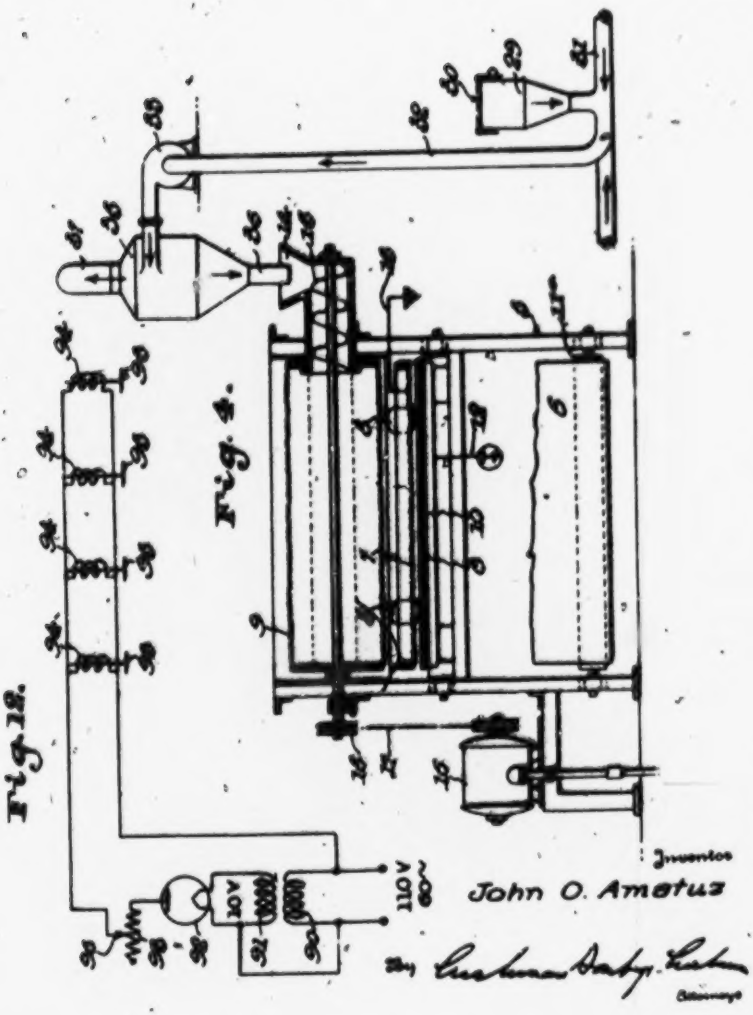

[fol. 778]

Aug. 22, 1944. J. O. AMSTUZ 2,356,489

APPARATUS FOR COATING

Filed Aug. 19, 1939 5 Sheets-Sheet 5

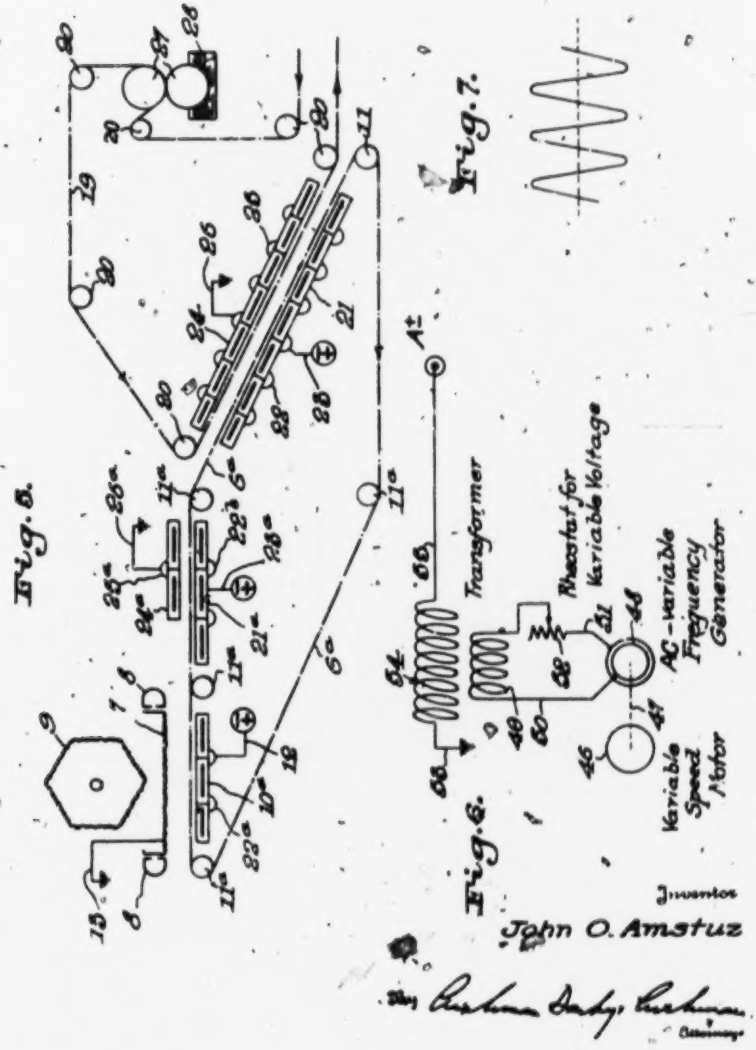

Inventor
John O. Amstuz

By Cushman Darby & Cushman
Attorneys

Patented Aug. 22, 1944 2,356,489

UNITED STATES PATENT OFFICE

2,356,489

APPARATUS FOR COATING

John O. Amatus, Troy, N. Y., assignor to Behr-Manning Corporation, Troy, N. Y., a corporation of Massachusetts

Application August 19, 1939, Serial No. 291,886

12 Claims. (Cl. 91—8)

The invention of the present application is an apparatus for coating, and more particularly for coating with fibrous material, such as flock, for the production of piled surfaces and pile-surfaced materials.

Heretofore, it has been proposed to produce pile-surfaced materials by depositing pile-forming particles, such as fibers or flock, upon an adhesively surfaced foundation material, and to orient or arrange the particles, preferably in parallelism and in endwise arrangement normal to the foundation material, by mechanical or electrical action. In some instances, both mechanical and electrical forces have been used. A process and apparatus involving electrical means alone is disclosed in my copending application Serial No. 108,706, filed November 2, 1936, and a process and apparatus employing both electrical and mechanical means is disclosed in the application of Harry A. Wintermute, Serial No. 699,456, filed November 23, 1933. For an example of a purely mechanical method and apparatus, reference may be had to the patent to Krueger, No. 1,965,552, dated April 17, 1934.

It has also been proposed, as disclosed in the above mentioned patent, to loosen and separate the fibers to some extent before they are subjected to mechanical or electrical action, or to both, in order to facilitate their deposition and orientation upon the adhesively coated foundation material.

The present invention is based upon the discovery that superior results may be obtained if the fibers are electrically oriented and deposited upon a supporting surface before being subjected to the mechanical or electrical forces which serve finally to deposit them upon the adhesive surface. It is also based upon the discovery that this preliminary electrical orientation upon a supporting surface, such as a carrier sheet, facilitates the subsequent deposit and orientation upon the adhesive foundation by transfer thereto from the carrier sheet. I have discovered that if the preliminary orientation on a carrier sheet is accompanied by an electrical charging of the particles, they are rendered more responsive to the electrical field which deposits them when they are moved into the latter field by the carrier sheet.

An object of the invention is to provide an apparatus by means of which the flocks, for example, may be continuously subjected to an electrical charge and electrically oriented upon a supporting surface, preferably immediately prior to their entry into a field by means of which they are deposited and finally oriented on and secured to the adhesive surface.

While the invention is particularly useful in the art of coating, it is also applicable to the feeding of comminuted material generally, and in connection with either mechanical or electrical coating devices or a combination of the two. It is also useful in connection with the feeding and coating with abrasive grains and other comminuted material, such as, for example, comminuted cork in a conveying or coating system.

It is an object of this invention to provide a uniform feed of comminuted material. It is a further object of the invention to break up or separate comminuted materials, such as flocks, so that the same may be more readily coated. It is another object of this invention to eliminate knots or clusters of comminuted material so that the comminuted material may be coated as individual particles. It is a further object of this invention to continuously form a uniform layer of flock upon a feed belt used to convey flocks and other comminuted material through a coating device. It is another object of this invention to orient elongated particles, such as, for example, flocks, before they enter an electro-coating device, which propels them to an adhesively coated backing whereby the comminuted material is more readily oriented and coated by the coating device. It is still a further object of this invention to pre-charge comminuted materials, such as flocks and other poor conductors, and to deposit and orient the materials on a carrier sheet before they enter an electrostatic coating device. Further objects of the invention are to provide practical apparatus by which one or more of the objects mentioned may be readily accomplished. Other objects will be in part obvious or in part pointed out hereafter.

In carrying out the invention, there is provided in connection with apparatus such as is disclosed, for example, in my copending application above referred to, means for preliminarily subjecting the flocks to an electrical field which will charge and/or orient them preliminary to their entrance into the field which serves to deposit the flocks upon an adhesively coated foundation. In association with the field, there may be provided means for mechanically separating the flocks, such as, for example, a rotary screen or screen conveyor. In addition to mechanical means for separating the flocks, it often is advantageous to use the electrical means for separating the flocks that are provided, as for example, the vibrating screen, which constitutes one electrode of an elec-

[fol. 780]

trostatic field, which is used to separate, disperse and uniformly deposit the fibres. Preferably, after a certain amount of mechanical distribution and separation, and in many cases, also after electrical separation and dispersion followed by deposition upon a supporting member, the flocks are caused to pass through an electrical field by means of which they are charged and also preferably oriented in relation to one another. For this purpose, a conveying belt or other carrier sheet may be used and the electrodes arranged in relation thereto in such a way that the particles are oriented on the belt substantially perpendicular to its surface. Immediately following this orientation and, preferably, before they lose their charge, the flocks, carried by the belt or sheet, are then subjected to the electrical field or other means, by which the particles are oriented, arranged, and deposited upon the adhesive coated foundation material. By this preliminary treatment, the flocks are handled more readily by the electrical field or other means which orients and deposits them upon the adhesive foundation, and a more uniform coating in the final article is more readily produced. The pre-charging of the flocks and the positive conveying of the same into a final electrical field, employed to produce the coating, enables that field to produce a more uniform product, since the fibers are pre-oriented and are also more responsive to the field which propels them with greater ease toward the backing material and attaches them to the adhesive foundation more evenly and with greater tenacity.

For breaking up and separating the flocks and other comminuted material and for dispersing the comminuted material and forming a uniform deposition of the same upon a feed belt or a similar conveying device, I may use either direct current or alternating current, but I prefer to use pulsating direct current or alternating current. I provide a means of varying and controlling the number of cycles and the voltage amplitude of both direct current and alternating current. Where alternating current is used, a preferred range of frequency is 2 to 200 cycles per second and for pulsating or interrupted direct current, a preferred range is 2 to 200 impulses per second. While not limited thereto, I prefer a voltage range of from 5000 to 75,000 volts with electrode spacings of one-half inch to three inches. I have obtained good results with many flocks with an electrode spacing of one and three-quarters inches using 60,000 volts and 60 cycle alternating current.

The apparatus by which my invention is carried out will be explained by reference to the accompanying drawings in which:

Figure 1 is a side elevation of one form of apparatus which may be used for carrying out my invention.

Figure 1a is a section on the line 1a—1a of Figure 1.

Figure 2 is a section through line 2—2 of Figure 1.

Figure 3 is a side elevation of another form of apparatus for carrying out my invention.

Figure 4 is a section through 4—4 of Figure 3.

Figure 5 is a side elevation of another form of apparatus for carrying out my invention and shows a special arrangement for pre-charging the flock before it enters the electrostatic coating device.

Figure 6 shows a wiring diagram for the alternating current used in carrying out my invention.

Figure 7 is a typical sine curve illustrating the variation of the potential on an electrode when the alternating current provided as illustrated in Figure 6 is superimposed upon the electrode.

Figure 8 shows a wiring diagram for the uninterrupted direct current and interrupted direct current used in carrying out my invention.

Figure 9 illustrates an uninterrupted direct negative potential.

Figure 10 illustrates an interrupted direct negative potential.

Figure 11 shows the electrical connections of the variable voltage motor driving the commutator or interrupter of the high tension set as shown in Figure 8.

Figure 12 illustrates the electrical connections of the vibrators.

Similar reference characters refer to similar parts throughout the several views of the drawings.

Referring to Figures 1 and 2, 5 is a frame for supporting the equipment and 6 is a conveyor belt which may be made of rubberized fabric or rubber. The flock is deposited upon this conveyor belt 6 and carried through the coating device. I provide a flat vibrating screen 7 of suitable mesh according to the type of comminuted material being passed through the screen and I provide electric vibrators 8 to vibrate the screen 7. A rotary sifting screen 9 delivers the flock or other comminuted material to the vibrating screen 7. I provide suitable electrodes 10 which are joined together by conductors, not shown. Roll 11 is driven by a motor, not shown, and continuously drives the conveyor belt around idler rolls 11a in the direction shown by the arrow in Figure 1. I provide a terminal and conducting connection 12 by means of which the electrodes 10 are connected to a source of high potential of suitable characteristics. A conductor 13 connects the vibrating screen 7 to ground. I provide a feed hopper 14 from which the flock or other comminuted material is supplied to a screw feeder 15 which in turn delivers the comminuted material to the rotary sifting screen 9. The rotary screen 9 and the screw conveyor 15 may be driven by a motor 16 driving a belt 17 which drives a pulley 18 attached to the shaft of the rotary screen 9 and screw feeder 15. I provide a suitably mounted roll of fabric 19 or other material which is to be coated with flocks or other comminuted materials. The fabric 19 is drawn over a plurality of idler rolls 20 in a course which may be as shown, by means of any suitable take-up device as a suction dsum, not shown. I provide a set of electrodes 21 which may or may not be insulated and which are connected together by suitable conductors 22. A terminal and connection 23 are provided to connect electrodes 21 to a suitable source of high potential having the desired characteristics as set forth herein. I further provide another set of coating electrodes 24 and these electrodes 24 may be joined together by suitable conductors 25. The electrodes 24 may be grounded as indicated at 26. The fabric 19 is coated with adhesive as by means of a suitable set of coating rolls 27 and an adhesive trough 28 and is conducted between the electrodes which at least equal in width (Figure 1a) the fabric to be coated.

The flock or other comminuted material is introduced into the hopper 14 of Figures 1 and 2 and delivered by the screw conveyor 15 to the rotary sifting screen 9 which in turn delivers the comminuted material to the flat vibrating screen 7. The flock passes through the vibrating screen

7 and is jerked apart and uniformly distributed over the conveyor belt 6 by the electrostatic field set up between electrodes 10 and 7, the vibrating screen 7 being a grounded electrode. The conveyor belt 6 continuously carries the flock between the coating electrodes 21 and 24. The fabric 19 passes over the idler rolls 20 between the coating rolls 27 where a suitable adhesive such as, for example, rubber cement is applied to the fabric from the coating trough 28. Fabric 19 continues over the idler rolls 20 between the coating electrodes 21 and 24 where the flocks or other comminuted materials are propelled into the adhesive coating on the fabric 19. The coated fabric continues over idler rolls 20 being pulled by a suction drum, as mentioned, and is delivered to festooning racks or other suitable drying equipment.

Referring to Figures 3 and 4, numbers 5–28 inc. denote parts identical with the parts denoted by the same numerals in Figures 1 and 2. Figures 3 and 4 illustrate how the advantages of feeding flock by an air current or other gaseous medium may be combined with the other advantages disclosed in Figures 1 and 2. In Figures 3 and 4, 29 denotes a feed hopper into which the flock that is used in the coating process may be introduced. The numeral 30 represents a hinged cover for the feed hopper 29. In these figures 31 is an air intake and 32 is an air duct that connects feed hopper 29 to a blower 33 which is used to propel the air current with the flocks entrained therein. Pipe 40 is an air duct extending from blower 33 to a centrifugal collector 36. The numeral 34 represents a motor which drives the blower 33 through suitable connecting means. Pipe 36 is a discharge extending from the centrifugal collector 36 to the feed hopper 14 whereby the flocks are conveyed from the collector to the hopper. Pipe 37 is an exhaust from the centrifugal collector 36 and the size of the exhaust pipe may be varied as desired, depending upon the material being used and the rate at which air is blown into the collector. I may provide a surplus hopper 38 in which the case the flocks not coated onto the adhesive on the fabric 19 are dumped into the belt 6 into the surplus hopper 38. From the surplus hopper 38 the surplus flock collected may pass through duct 36 into the air stream of duct 32 for recirculation along with additional flock added through hopper 29 or the surplus flock may be retained in hopper 38 and removed from time to time whereby only the new flock added through hopper 29 is coated.

Referring to Figure 5, 6a denotes the belt trained about idler rolls 11a and driven by the motor-driven roll 11 in the direction indicated by the arrow. Part 7 is the flat vibrating screen to which are attached the vibrators 8. The flat vibrating screen 7 serves as an electrode and is grounded as indicated by 13. The rotary sifting screen 9 is fed, for example, by a screw conveyor as illustrated in Figures 1 and 2 and the flock passes from the rotary screen 9 to the flat vibrating screen 7. Numerals 10a represent electrodes which may be insulated and joined together by suitable conductors 22a. Electrodes 10a are provided with a terminal and connection 12 to a high tension set. The flocks pass through flat vibrating screen 7 into the electrostatic field set up between the electrodes 10a and the flat vibrating screen 7 which is also an electrode. In this field the flocks are broken up and loosened and prepared for the subsequent operation. I provide a set of electrodes 21a which may or may not be insulated and which are connected by suitable conductors 22b. A terminal and connection 22a connects electrodes 21a with a source of high potential of suitable characteristics. Numeral 24a represents another set of electrodes located above the belt 6a. These electrodes may or may not be insulated and are joined together by suitable conductors 22a. Electrodes 24a are grounded as indicated at 23a. The flock passes from the electrostatic field set up between electrodes 10a and flat vibrating screen 7 into the electrostatic field set up between the electrodes 21a and 24a. In this latter field the flocks are oriented on the belt substantially perpendicular to the surface of the belt and are thereby rendered more suitable for the subsequent coating operation. A fabric 19 is passed between coating rolls 27 where adhesive is picked up from coating box 28. The adhesively coated fabric 19 then passes over idler rolls 20 and through the electrostatic field set up between electrodes 21 and 24, the flock being delivered into this field in an oriented condition, as previously explained, by endless belt 6a. In the electrostatic field between electrodes 21 and 24 the flock is propelled into and retained by the adhesive coating on fabric 19 and the flock coated fabric passes continuously to some suitable drying arrangement, not shown, being pulled by a suitable suction drum as specified. Terminal, ground connection and connecting conductors are provided as previously specified in the case of the embodiment of Figures 1 and 2.

Referring to Figure 6 which illustrates diagrammatically a set-up for obtaining any desired frequency of pulsation of alternating current and any desired potential from an electrode used in my coating process, 46 is a variable speed motor connected through suitable connecting means 47 to an alternating current variable frequency generator 48. Suitable motors, connections and generators are well known in the art. The alternating current generated in generator 48 is fed through conductors 50 and 51 to the primary winding 49 of a transformer. In conductor 51 between the motor generator and the primary winding 49 of the transformer is located a rheostat 52 for varying the voltage. The transformer may be of any desired type, but for purposes of illustration, I use a core type transformer. At 53 is shown a ground for the secondary winding 54 of the transformer, the secondary winding 54 of the transformer being connected to a suitable conductor 55 which leads to a suitable terminal A± which may be one of the electrodes indicated as connected to a high tension set in Figures 1, 2, 3, 4, and 5 or it may be a terminal which is in turn connected to one of the aforesaid electrodes. By such adjustments as are known in the art, the variable speed motor 46, the generator 48, the transformer windings 49 and 54 and the rheostat 52 may be controlled to obtain any desired frequency and potential at the terminal A±.

Figure 7 shows diagrammatically a typical sine curve characteristic of the potential impressed upon the terminal A± of Figure 6.

In Figure 8 is illustrated a set-up suitable for producing a continuous direct current of a desired high potential or an interrupted direct current of the desired potential. In Figure 8, 60 represents the primary winding of a transformer fed by a suitable source of alternating current at the terminals x and y and 61 represents the secondary winding of the transformer. Any suitable transformer may be used, but I generally employ a transformer of the core type. The

[fol. 782]

transformer is grounded, as indicated in Figure 8, by a suitable conductor 82. Conductors 83 and 84 run from the secondary winding of the transformer to Kenotron tubes 86 and 86. Conductor 87 runs from Kenotron tube 85 to conductor 88 and conductor 89 runs from Kenotron tube 86 to conductor 88. Conductor 70 is grounded and extends to a terminal (G) which may be the electrodes indicated as grounded in Figures 1, 2, 3, 4 and 5 or an intermediate terminal which is in turn connected to the said electrodes. Conductor 88 leads to a terminal A— which may be the electrodes indicated as connected to a high tension set in Figures 1, 2, 3, 4, and 5, or an intermediate terminal which is, in turn, connected to those electrodes. I provide a condenser 71 connected by suitable conductors to the conductors 88 and 70. The purpose of condenser 71 is to largely eliminate the ripple effect that would otherwise be obtained in the potential delivered to the terminal A—. I provide a commutator 72 located between the two branches of a conductor 73 which runs from conductor 88 to the conductor 70. Commutator 72 is driven by a variable speed motor, not shown. A suitable wiring diagram for a variable speed motor which may be used to drive the commutator or interrupter 72 is shown in Figure 11. Commutator 72 is used only in those cases where a pulsating direct current is desired. When it is desired to have one of the electrodes in Figures 1, 2, 3, 4, and 5 grounded and the opposing electrode of an uninterrupted negative potential, the interrupter 72 is not used. By not using the interrupter 72 and by properly adjusting the transformer and the characteristics of the current delivered to the primary winding 80 by methods well known in the art, I am able to obtain any desired negative potential at the terminal A—. If, instead of a negative potential on one electrode and the other electrode grounded, I desire a positive potential on one electrode and the other electrode grounded, I reverse the Kenotron tubes 85 and 86, that is, the plates of the Kenotron tubes 85 and 86 will be joined to conductors 83 and 84, thus reversing the direction of flow of electrons. Thus, I am able to deliver to the terminal A— either a positive or negative potential of any desired voltage. If, instead of a steady direct potential I desire an interrupted potential, either the positive or negative potential may be interrupted with any desired frequency by operating commutator 72. By varying the time of contact and the time that the contact is broken, I may obtain any desired frequency of interruption and any desired duration of time of the interruptions, and any desired duration of time of the electrical impulses.

In Figure 9, I have illustrated diagrammatically an uninterrupted direct potential. In this figure, 74 represents the base line or zero potential and 75 the applied negative potential which has only a relatively small ripple effect. This ripple effect is not very great because of the action of the condenser 71 of Figure 8.

In Figure 10, I have illustrated the same negative direct potential interrupted. In this figure, 76 represents the base line or zero potential and 77 represents the interrupted negative potential. The potential as illustrated in Figures 9 and 10 are taken from the negative terminal A— of Figure 8. Positive potentials, uninterrupted and interrupted, similar to the negative potentials illustrated in Figures 9 and 10 may be obtained where the Kenotron tubes of Figure 8 are reversed so as to apply a positive potential at the terminal A—.

Referring to Figure 11, 90 is the field winding, 91 is the armature and 92 is a potentiometer used for controlling the armature current, which in turn controls the speed, the greater the current the greater the speed of the motor and vice versa. Potentiometer 92 consists of parts 93 and 94 and 95 is a connection between armature 91 and the resistance 94, 96 making a sliding or other adjustable contact with resistance 94 whereby the current may be increased or decreased at will.

Referring to Figure 12, 80 is the primary of the transformer and 81 is the secondary, the transformer reducing the potential from 110 volts to 10 volts. The secondary of the transformer may be connected to the filament of a Tungar rectifier 82 or other suitable rectifier. The plate of the rectifier 82 is connected to a variable resistance 83 provided with a sliding or other adjustable contact 84 and this variable resistance is used to control the amplitude of the vibrators by controlling the current energizing the vibrators. Windings 94 are the windings for the solenoids of the electric vibrators and 95 are the cores of the vibrators which transmit the mechanical vibration to the first vibrating screen 7 of Figures 1, 2, 3, 4, and 5. The windings 94 of the vibrators are energized, for example, by 110 volt, 60 cycle, single phase A. C. current plus a superimposed pulsating D. C. current supplied by the rectifier 82. The applied D. C. potential serves to unbalance the alternating current wave and causes the cores 95 of the vibrators to move back and forth within the windings 94 of the solenoids. The amplitude of the vibration is regulated by controlling the D. C. voltage and current supplied by rectifier 82 by adjusting sliding contact 84. If the voltage and current are increased, the system becomes more unbalanced and the amplitude of the vibrations is increased. A decrease in the applied D. C. voltage and current, on the contrary, decreases the amplitude. With the arrangement shown the desired amplitude of vibration may be attained. If other frequencies of vibration are desired, different frequencies of alternating current may be supplied to the primary winding of the transformer and to the windings 94 of the solenoids.

The apparatus of the present invention and the different embodiments as above set forth have the following advantageous features:

a. The flock is effectively broken up prior to being coated upon the fabric 10. Under certain conditions of manufacture and humidity, flock as received by the coater is badly matted and it has been difficult effectively to separate the individual fibres. By providing apparatus which separates the fibres effectively before the flock arrives at the final electrostatic field which does the coating, I am enabled to handle material which it has been difficult to use heretofore. The various embodiments of the present invention use one or more apparatus to shake up and separate the flock fibres and the selection of a particular apparatus among those illustrated and described herein may depend upon the type of material being produced, the grade of flock being used and its condition, whether matted or not, and, if so, how much.

The method illustrated in Figure 1 and 2 contemplates using a vibrating screen which constitutes one electrode of an electrostatic field and an auxiliary electrode or electrodes to break up lumps of fibres and separate them into individual

fibres and deposit them evenly on a conveying means for subsequent coating, in oriented relation, on an adhesively coated foundation material.

b. Another feature of the invention is the production of a more uniform coating in the final article. This is dependent to a large extent upon the effectiveness of the dispersion prior to the time the flock enters the final electrostatic field which does the coating. Even though all of the fibres are separated from each other a poor distribution thereof will have a tendency to produce an uneven coating and in order that the textile goods may present a uniform appearance, a uniform coating is desired. As in the case of separation of the fibres, the particular apparatus of those herein disclosed which will be used for a particular coating job depends upon the type of flock which is being used and the condition thereof.

c. A third feature of the invention is the production of a piled fabric in which the individual fibres are maintained to a greater extent in parallelism and more nearly normal to the backing material 10. It is the final electrostatic field which finally orients and coats the fibres prepared for coating by the previous orientation, but a previous electrostatic field gives the final electrostatic field less work to do in this respect and the ultimate result has been found to be superior.

d. Still another feature of the invention involves pre-charging the individual flock fibres so that the final electrostatic field which does the coating finds them more responsive and propels them with greater ease towards the backing material 10. Certain flock materials are hard to lift electrostatically and such materials can be more readily handled by apparatus as herein disclosed than previously. Furthermore, the durability of the fabric produced involves the tenacity with which the pile is attached thereto. This may be a function of the adhesive employed, but with a given adhesive it may also be a function of the force or speed with which the particles are propelled to the backing material 10. By providing apparatus to pre-charge the flocks prior to their entering between the coating electrodes 21 and 24, I am enabled to handle materials which could either not be handled previously or only with difficulty and at a slow rate of production. This advantageous feature may thus also involve an increase in the production of the machine.

In order to attain the advantageous features (a) and (b), that is, to break up and disperse the flock, either direct current or alternating current may be used. I prefer to use either alternating current or a pulsating direct current. In order that a given machine may effectively handle different types and kinds of flock material and under varying conditions of temperature and humidity, both the frequency and the effective E. M. F. should be variable and controllable. I have found that the frequency should have a range of from 2 to 200 cycles per second for alternating current and 2 to 200 impulses per second for pulsating direct current. The effective voltage should range from 5000 to 75,000 volts. However, I do not wish to be limited to any particular range in either respect and the foregoing is given merely to assist one in putting the present invention into practice.

It should be understood that in order to properly break up and disperse the flocks, it is often advantageous to bring about a bounding back and forth between the electrodes which is readily accomplished under the influence of an alternating current or an interrupted direct current superimposed upon the electrodes, as for example, electrodes 18, Figure 1, connected to the source of high potential.

For the accomplishment of feature (c), that is, in order to orient the flock, direct current is preferred and this may or may not be a pulsating or interrupted direct current. The same holds true for the accomplishment of feature (d), that is, for pre-charging the flock particles before they enter the final electrostatic coating field.

In pre-charging or in orienting the particles, the object is not to bounce the particles up and down and separate them as in the case of feature (a), but to charge and orient the particles on the supporting member, as for instance, belt 9a. It will be clear that orientation and alignment will be best accomplished where the fibres are charged and made to stand erect parallel to the lines of force of the field on the supporting member, without being propelled backwards and forwards between the electrodes. The voltages and electrodes spacings required to charge and orient the fibres without propelling them depends upon the conductivity of the comminuted materials, as for instance, flocks, and the conductivity of the supporting belt, both of which may vary with the humidity of the atmosphere. While I cannot give any specific spacings and voltages for a particular instance, the voltages and spacings may be readily adjusted to the point that the comminuted materials or fibres simply stand erect and orient without being propelled toward the opposite electrode. In many cases, good results have been obtained with an electrode spacing of one inch and 20,000 volts. In some instances, an electrode spacing which is not much greater than the length of the fibres will be found effective.

For the accomplishment of feature (d), that is, to cause the flock particles to be impelled with greater force to the fabric 10, the pre-charging electrode should be charged with electricity of the same sign as the electrode of the electrocoating apparatus which is on the same side of the belt 9a where direct current, either uninterrupted or interrupted, is used in coating. On the other hand, this might be varied to the extent of having the pre-charging electrode of opposite sign to the electrode of the coating apparatus which is on the opposite side of the belt 9a. In case the coating is carried out with alternating current, that is, an alternating polarity, pre-charging with either a positive or negative charge is advantageous if the flocks or other comminuted material is a good insulator or very poor conductor, that is, if the flow of electrons through the material or over its surface is relatively slow as compared with the speed of reversal of the polarity of the coating electrodes. The bottom electrodes in the various embodiments of this invention have been shown as connected to the high tension terminal of a source of high potential, and the upper electrodes have been shown as connected to ground. This is a preferred arrangement, but very satisfactory results may also be attained when the connections are reversed, that is, when the upper electrodes are connected to a source of high potential and the lower electrodes are grounded. It is particularly important that the upper electrodes in contact

[fol. 784]

with a fabric coated with a conductive adhesive be grounded.

The rotating screen 9 is effective to break up clumps of the flock which are further broken up by the vibrating screen 7. With the use of the apparatus shown in Figure 3, the flocks come to the rotating screen 9 fairly well broken up. This blower apparatus may, therefore, be used in cases where the flock is badly matted. The centrifugal blower 32 acts to break up the flock material both by reason of the air stream and also by the impact of the blades of the blower upon the material.

The electrostatic field between the electrodes 18a and the screen 7 in Figure 3 has the function of separating the flock fibres still further and distributing them uniformly on the belt 6a. The electrodes 21a and 24a cause a charging and/or orienting of the fibres on the belt 6a as well as providing an initial charge upon the fibres so that the final set of electrodes 21 and 24 which do the coating will transfer the particles more effectively in oriented relation into the adhesive and produce a superior coating.

By means of the apparatus and methods illustrated in Figure 3, I am therefore enabled to form on a supporting member, a layer of fibres in oriented relation and in contact with the supporting member and thereafter transfer the oriented layer of fibres in oriented relationship to an adhesively coated backing.

Certain types of materials are so conductive as to be handled with difficulty and other types of materials are so near being perfect insulators as to present great difficulty also. I may condition the atmosphere passing through the blower 32 or in the coating room to increase or lower the conductivity of the flocks, as, for example, by using an atmosphere of controlled humidity, that is to say, I may use greater or less humidity than that prevailing outside at the particular time, as desired.

It will thus be seen that there has been provided by this invention, apparatus in which the various objects hereinabove set forth, together with many thorough practical advantages, are successfully achieved. As various possible embodiments might be made of the mechanical features of the above invention, and as the art herein described might be varied in various parts, all without departing from the scope of the invention, it is to be understood that all matter hereinbefore set forth is to be interpreted as illustrative and not in a limiting sense.

I claim:

1. Apparatus for coating a foundation material with comminuted material, such as flocks, comprising a vibratory screen, means for establishing an electrostatic field in which the screen constitutes one electrode, means for delivering comminuted material to the screen, whereby material sifted through the screen is charged with a potential different from that of the screen, a conveyor for conducting from the field the comminuted material sifted through the screen, the charges imparted to the material by the field serving to separate and disperse the material on the conveyor, a pair of electrodes for establishing an electrostatic field, means for passing said conveyor with the comminuted material in dispersed condition thereon between said electrodes, means for supplying adhesively coated foundation material in spaced relation to the conveyor between the electrodes and means for imparting to the electrode behind the conveyor and remote from the foundation material a charge of the same polarity as the comminuted material, whereby the separated and dispersed material on the conveyor is propelled onto the adhesively coated foundation material.

2. Apparatus for feeding comminuted material, such as flocks, comprising a vibratory screen, means for establishing an electrostatic field in which the screen constitutes one electrode, means for delivering comminuted material to the screen, conveyor means for conducting from the field comminuted material sifted through the screen, the field serving to disperse the material, means for establishing an electrostatic field through which the dispersed material is conveyed and whereby the material is oriented on said conveyor, means for supplying adhesively coated foundation material with the adhesively coated surface facing the material on the conveyor in proximity thereto, and a pair of electrodes for creating an electrostatic field for projecting the material from the conveyor onto said adhesively coated surface.

3. Apparatus for feeding comminuted material, such as flocks, comprising a vibratory screen, means for establishing an electrostatic field in which the screen constitutes one electrode, means for delivering comminuted material to the screen, and conveyor means for conducting from the field comminuted material sifted through the screen, the field serving to impart to the material electrostatic charges of like polarity to disperse the particles on the conveyor, means for establishing an electrostatic field through which the dispersed material is conveyed by said conveyor and whereby the material is oriented and additionally charged on said conveyor means, means for positioning adhesively coated foundation material in proximity to the oriented and charged comminuted material on said conveyor means, and means for establishing another electrostatic field for projecting the oriented and charged particles from the conveyor means onto the adhesively coated foundation material and including a projecting electrode having the same polarity as the charged particles.

4. Apparatus for handling comminuted material, such as flocks, comprising means for creating an air stream, means for delivering the comminuted material into the stream, a collector, means for directing the air stream with the entrained material into the collector, sifting means for receiving the flocks from the collector, means for receiving the flocks from the sifting means, means for electrically charging the flocks for dispersing the same on said receiving means, said receiving means serving to conduct the material along a predetermined path, means for positioning an adhesively coated foundation material in closely spaced proximity to said path and means for creating an electrostatic field for projecting the material from the receiving means to the adhesively coated foundation material in proximity thereto.

5. In an apparatus for depositing comminuted, pile-surface-forming material upon an adhesively coated backing sheet, a conveyor for conveying a layer of such material into proximity to the adhesively coated backing sheet, means for sifting said material onto the conveyor, means for delivering the material to the sifting means, means for breaking up bunches or clusters of the material and for dispersing the same evenly on the conveyor, and means for transferring the dispersed comminuted material from the conveyor onto the backing sheet, said breaking-up

and dispersing means comprising an electrode below and adjacent the conveyor and means for establishing an electrostatic field between the sifting means and said electrode, whereby electrostatic charges of like polarity are imparted to the particles of material and the bunches or clusters are broken up and the particles dispersed by the mutually repellent forces resulting from said charges.

6. In an apparatus for depositing comminuted, pile-surface-forming material upon an adhesively coated backing sheet, a conveyor for conveying a layer of such material into proximity to the adhesively coated backing sheet, means for sifting said material onto the conveyor, means for breaking up bunches or clusters of the material and for dispersing the same evenly on the conveyor, and means for transferring the dispersed comminuted material from the conveyor onto the backing sheet, said breaking-up and dispersing means comprising an electrode below the conveyor and means for establishing an electrostatic field of alternating polarity between the sifting means and said electrode, whereby electrostatic charges of like polarity are momentarily imparted to the particles and the bunches or clusters are broken up and the particles dispersed by the mutually repellent forces resulting from said charges.

7. An apparatus for depositing a coating of pile-forming fibres in oriented relation upon an adhesively coated backing sheet, comprising means for moving such a backing sheet along a predetermined path with the adhesive coating facing downwardly, a conveyor trained for movement below the backing sheet in proximity thereto, means for sifting a layer of comminuted pile-forming fibres on the conveyor, an electrode below the sifting means, means for establishing an electrostatic field of alternating polarity between the sifting means and said electrode to impart electrostatic charges of like polarity to the particles momentarily and thereby break up bunches or clusters of particles and disperse the same by the mutually repellent forces resulting from said charges, a pair of electrodes spaced from the first-mentioned electrode and between which the backing sheet and the conveyor are moved, and means for establishing a second electrostatic field of alternating polarity between the last-mentioned electrodes, whereby the dispersed particles on the conveyor are projected onto the adhesively coated surface of the backing sheet in oriented relation.

8. An apparatus for depositing a coating of pile-forming fibres in oriented relation upon an adhesively coated backing sheet, comprising means for moving such a backing sheet along a predetermined path with the adhesive coating facing downwardly, a conveyor trained for movement below the backing sheet in proximity thereto, means for depositing a layer of comminuted pile-forming fibres on the conveyor, means for establishing a preliminary electrostatic field of alternating polarity to impart electrostatic charges of like polarity to the particles momentarily and thereby break up bunches or clusters of particles and disperse the same on the conveyor by the mutually repellent forces resulting from said charges, a pair of electrodes spaced from the first-mentioned electrostatic field and between which the backing sheet and the conveyor are moved, and means for establishing a second electrostatic field of alternating polarity between said electrodes, whereby the dispersed particles on the conveyor are projected onto the adhesively coated surface of the backing sheet in oriented relation.

9. An apparatus as specified in claim 8 in which the sifting means includes a vibratory screen and in which means are provided to create an electrical field between a pair of electrodes, one of which is constituted by the screen.

10. Apparatus as specified in claim 8 in which the means for delivering the comminuted material to the sifting means comprises an air conduit including means for forming an air stream, and means for introducing comminuted material into the conduit.

11. Apparatus as specified in claim 8 in which the means for delivering the comminuted material to the sifting means comprises an air conduit including means for forming an air stream, and means for introducing comminuted material into the conduit, and in which the sifting means includes a vibratory screen to which the material is delivered, and means for creating an electrical field between a pair of electrodes, one of which is constituted by the screen.

12. In an apparatus for depositing comminuted, pile-surface forming material upon an adhesively coated backing sheet, a conveyor for conveying a layer of such material into proximity to the adhesively coated backing sheet, and means for breaking-up bunches or clusters of such material and for depositing the same in evenly dispersed condition on the conveyor, the last-mentioned means comprising a vibrating screen above the conveyor, an electrode below the conveyor, means for delivering comminuted material to the screen, and means for establishing between the screen and the lower electrode, an electrostatic field of alternating polarity, whereby electrostatic charges of like polarity are momentarily imparted to the particles and the bunches or clusters are broken up and the particles dispersed by the mutually repellent forces resulting from said charges.

JOHN O. AMSTUT.

[fol. 786]

8

CERTIFICATE OF CORRECTION.

Patent No. 2,356,489. August 22, 1944.

JOHN O. AMSTUZ.

It is hereby certified that error appears in the printed specification of the above numbered patent requiring correction as follows: Page 3, first column, line 45, before the word "case" strike out "the"; line 46, after "dumped" strike out "into" and insert instead --from--; and that the said Letters Patent should be read with this correction therein that the same may conform to the record of the case in the Patent Office.

Signed and sealed this 7th day of November, A. D. 1944.

(Seal)

Leslie Frazer
Acting Commissioner of Patents.

March 6, 1945. R. P. CARLTON 2,370,636

MANUFACTURE OF ABRASIVES

Filed March 23, 1933 6 Sheets-Sheet 1

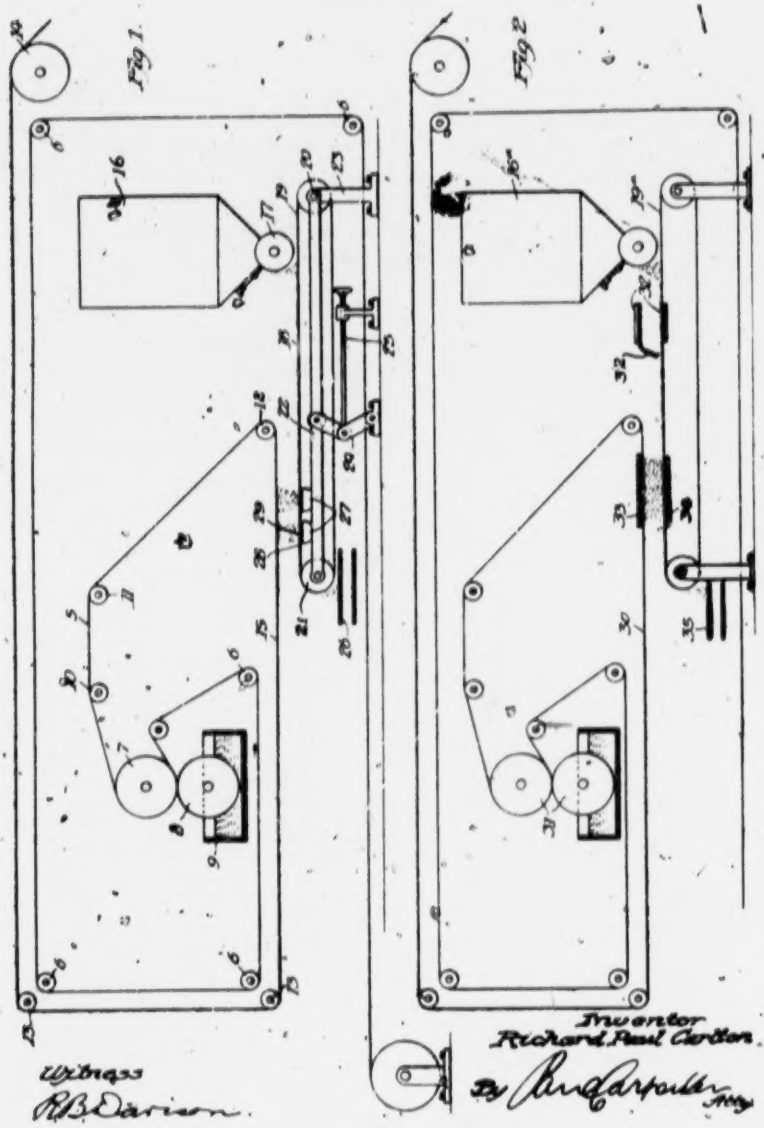

[fol. 788]

March 6, 1945. R. P. CARLTON 2,370,636

MANUFACTURE OF ABRASIVES

Filed March 23, 1933 6 Sheets-Sheet 2

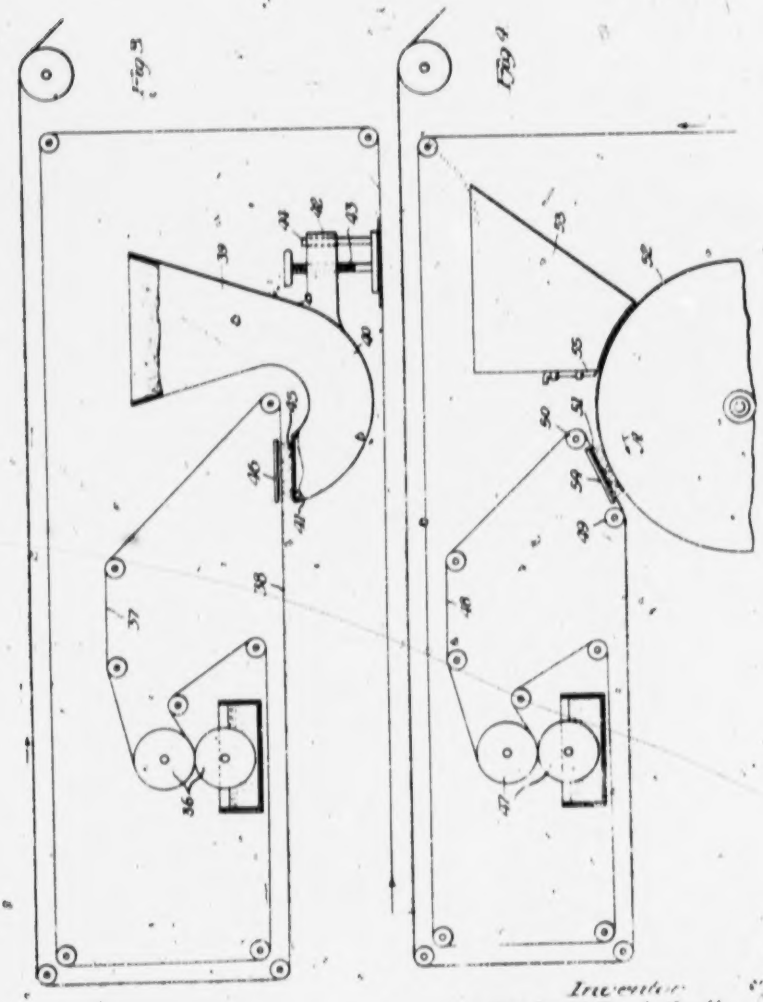

Witness
R B Davison

Inventor
Richard Paul Carlton
By Chas. Carpenter Atty

[fol. 789]

March 6, 1945. R. P. CARLTON 2,370,636

MANUFACTURE OF ABRASIVES

Filed March 23, 1933 5 Sheets-Sheet 3

Fig. 5

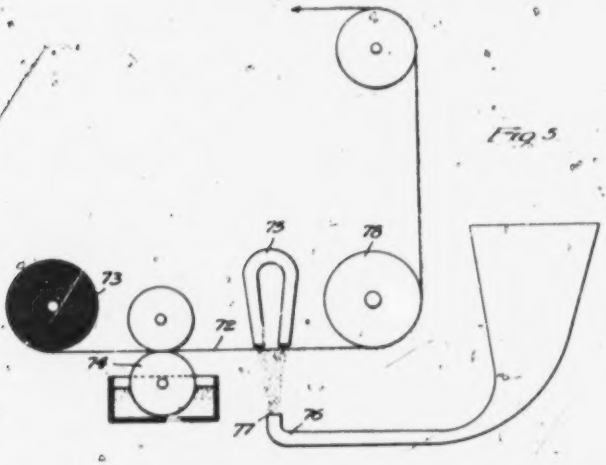

Fig. 6

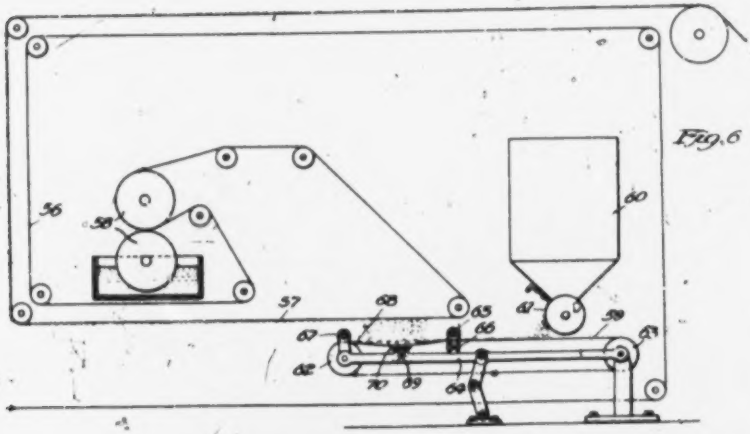

Fig. 7

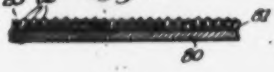

Witness

R. B. Darrow

Inventor
Richard Paul Carlton

By Paul Carpenter

[fol. 790]

March 6, 1945. R. P. CARLTON 2,370,636

MANUFACTURE OF ABRASIVES

Filed March 23, 1933 6 Sheets-Sheet 4

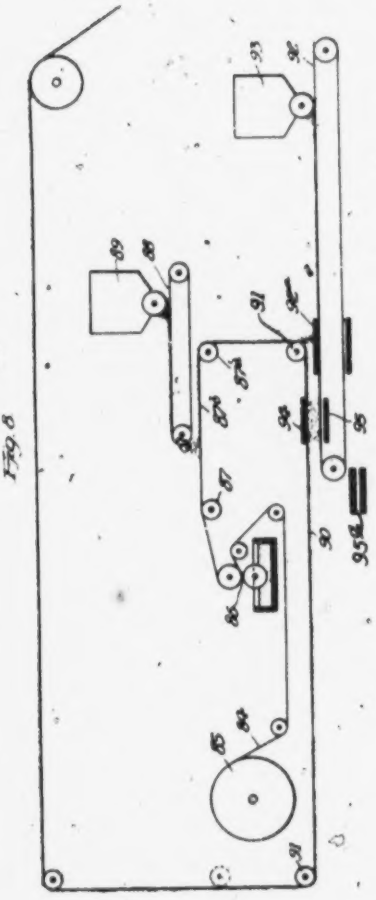

Fig. 8

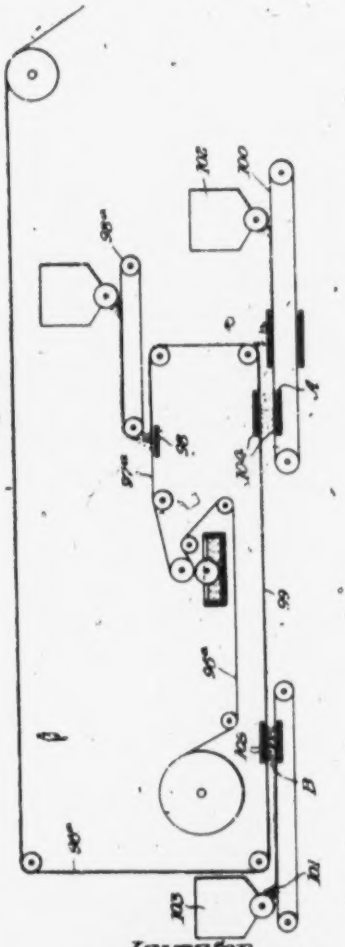

Fig. 9

Witness:
G. B. Davison

Inventor
Richard Paul Carlton
By Paul Carpenter
Atty

[fol. 791]

March 6, 1945. R. P. CARLTON 2,370,636

MANUFACTURE OF ABRASIVES

Filed March 23, 1933 6 Sheets-Sheet 5

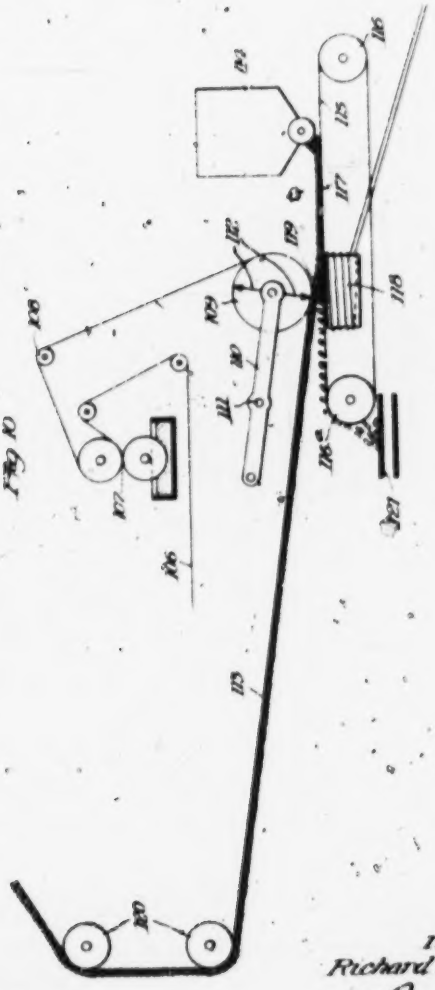

Witness
R B Davison

Inventor
Richard Paul Carlton
By Phone Carpenter
Atty

[fol. 792]

March 6, 1945. R. P. CARLTON 2,370,636

MANUFACTURE OF ABRASIVES

Filed March 23, 1933 6 Sheets-Sheet 6

Fig. 11

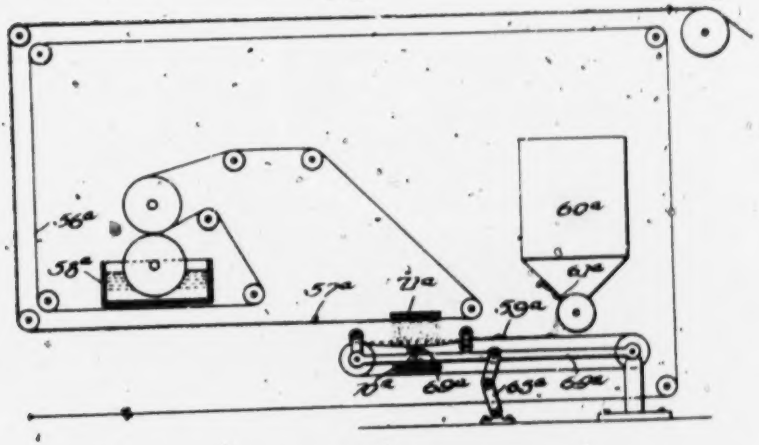

Fig. 12

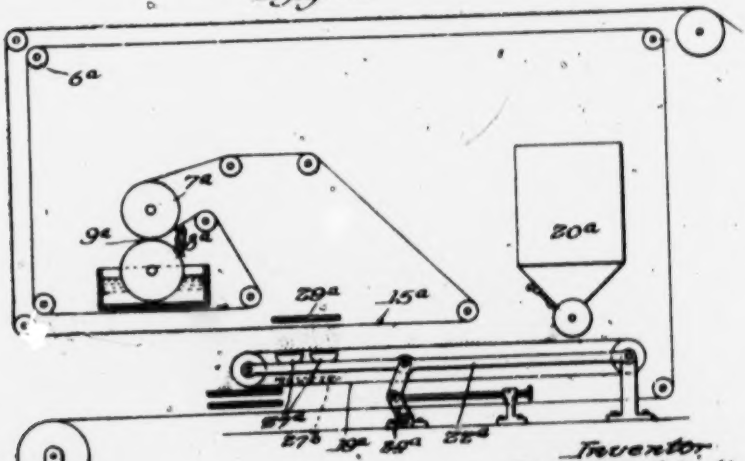

Witness:
R. B. Davison

Inventor
Richard Paul Carlton
By [signature]
Atty

Patented Mar. 6, 1945 2,370,636

UNITED STATES PATENT OFFICE

2,370,636

MANUFACTURE OF ABRASIVES

Richard Paul Carlton, St. Paul, Minn., assignor to Minnesota Mining & Manufacturing Company, Wilmington, Del., a corporation of Delaware

Application March 23, 1933, Serial No. 662,319

1 Claim. (Cl. 117—17)

This invention relates in general to coated articles and to the art of coating, and more particularly to an improved method of and apparatus for applying pulverulent coatings to suitably adhesively coated surfaces, and while the invention finds particular utility in the art of making flexible abrasives, and is, therefore, described and illustrated for this purpose, it finds a wide field of utility for analogous purposes.

This application is a continuation in part of my application S. N. 422,965, filed January 20, 1930, now Patent No. 2,318,876, granted May 4, 1943. Said parent application being directed to methods of and apparatus for applying coatings such as abrasive particles to a suitable backing by the action of an electrical field broadly, and in certain respects more particularly in applying such coatings of abrasive particles by the action of an electrical field irrespective of the force of gravity.

It is well known that in the art of making sandpaper, emery paper or cloth and similar abrasive articles, a flexible or in some cases, a rigid, backing of paper, cloth, wood or the like, is employed, to which is applied a coating of an adhesive substance, such as animal or vegetable glue, or where a waterproof article is desired, the backing may be coated with any of the now well known waterproof adhesives of the Okie Patents 1,565,027, 1,565,028, of Dec. 8, 1925, or 1,581,697 of April 30, 1926, for this purpose, and while the coating is still wet or unset, a suitable abrasive material such as garnet, corundum, sand or the like is applied thereto. The grains of abrasive substances are usually applied by gravity upon the upper adhesive coated surface of the backing and they lie in the adhesive material in haphazard fashion due to the elongated nature of the abrasive particles, and, in a large degree, the facets or cutting edges of the individual grains or grits often lie flat upon or are embedded in the adhesive coating in such a manner that in some instances their best cutting edges never come into contact with the work or, at best, are brought inefficiently into contact therewith. The invention here has as one of its objects to measureably increase the number of grits whose longer or greater dimensions are in a plane perpendicular to the surface of the backing, thereby to present more efficiently the cutting edges to the work, and increase the cutting ability and life of the abrasive article.

It will be understood that in ordinarily depositing mineral, that is, pulverulent abrasive material solely under the force of gravity onto a backing, it acquires a velocity due to the action of gravity. As the grits pass through the intervening air space, there will be caused some change in their positions enroute to the sheet or backing, but ordinarily neither the velocity given to the grits or the effect of the air on them is sufficient to cause them to become aligned so as to assume positions substantially perpendicular to the backing. It is, therefore, necessary that independent force be applied to the grits, and I have found that by passing the grits through a static field of electric energy or of electro-magnetic energy or by mechanically imparting this force to the grits, a much greater number of the individual particles will assume erect positions on the backing, which will enhance its cutting ability. As will later appear, my invention, in its several forms, is capable of application for operation in conjunction with gravity methods of applying the grit, inasmuch as under certain conditions, and for some purposes, it is desirable to employ both gravity and one of the forms of my invention in conjunction in order to attain a desired form of abrasive article.

In carrying out this invention, I find it desirable to employ a conveyor for conducting the mineral at rest relative to the conveyor by relatively slow speed to a point adjacent to which the independent force is applied for projecting the particles of grit onto the backing. I find that by then applying this independent force, be it mechanical or electrostatic or electromagnetic, I am able to impart a high velocity to the particle so that any force of gravity acting on the particle, whether in the same direction, in a counter direction, or in a direction angularly to that at which the force is applied, will be relatively small compared to this force applied. It is possible with the present invention to apply the force directly counter to gravity, that is, by bringing the grits beneath the backing or by applying the force in some other direction as long as the force of gravity and the effect of air is reduced below a point which will interfere with the result desired, namely, the projection of the grits with their longitudinal dimensions ultimately perpendicular, or substantially so, with respect to the backing.

The principal objects and advantages of this invention reside in the provision of an improved abrasive coated article, such, for example, as sandpaper, emery cloth, or the like, wherein the abrasive grits or grains lie in position on the backing for increasing the cutting effect and durability of the abrasive article; the provision of an improved abrasive article wherein the ab-

[fol. 794]

rasive grits are disposed so that their cutting facets are presented in position to more efficiently engage the work and thereby produce a sharper article; the provision of an improved abrasive article wherein the abrasive grains or grits are applied thereto with their longer or greater dimension substantially perpendicular to the plane of the backing; the provision of an improved abrasive article which may be flexible or rigid, as desired, and which may or may not be made waterproof, that is, suitable for employment in a water abrading operation.

This invention further includes as objects and advantages thereof, the provision of an improved method of and apparatus for manufacturing abrasive articles; the provision of an improved method of and apparatus for applying pulverulent material to one surface of a backing irrespective of the force of gravity, that is, against the normal tendency of the force of gravity; the provision of an improved method of and apparatus for propelling a pulverulent material, such as a grit or an abrasive grain, against an adhesive coated surface; the provision of an improved method of and apparatus for the purpose set forth and including electrically operated means for acting on an abrasive grain or pulverulent material and causing it to advance onto the adhesive coated backing irrespective of the force of gravity; the provision of an improved method of and apparatus for causing the particles of pulverulent material to impinge upon and assume a position in the adhesive coated surface substantially normal or perpendicular to the surface of the backing; the provision of an improved method of and apparatus for propelling a pulverulent material onto a moving sheet in a direction transversely to the plane of movement thereof and in a direction substantially counter to gravity; the provision of an improved method of and apparatus for making abrasive articles, such as sandpaper and the like, which includes the application of a grit to the under side of the backing; the provision of an improved apparatus which includes means for feeding and applying a pulverulent material counter to the force of gravity and simultaneously with movement of the backing; the provision of an improved means for moving a web of paper and applying an adhesive thereto and including means arranged below and for operating synchronously with for applying a pulverulent material to the under side of said moving backing; and the provision of an apparatus of the character described wherein improved electrostatic or electromagnetic means may be employed, acting on the abrasive material and causing it to move at an accelerated speed toward the sheet so as to cause it to impinge thereon in the adhesive coating and thereby present the cutting edges of the abrasive grits away from the surface of the backing and thus increase the cutting ability and life of the abrasive article.

I have also found my invention useful as a modifying step in the employment of the conventional gravity process for applying grit in the manufacture of sandpaper or other abrasive, and, therefore, additional objects of this invention reside in the provision of an improved method of interposing an additional step which will apply abrasive grains either before or after the application of grits by gravity in the usual manner, it being understood that the step of applying grit irrespective of gravity by an electromagnetic or electrostatic means may be employed somewhere in the process of manufacture, the essential purpose being to increase the number of grits whose cutting facets are presented away from the backing and thereby to enhance the cutting ability of the finished article.

The apparatus of this invention includes a number of alternative forms for mechanically or electrically carrying out the steps of the process and to this end is provided an improved pneumatic means and improved vibrator structure for mechanically propelling the pulverulent materials and improved electromagnetic structure for acting on the mineral and causing it to move in a cloud toward the adhesive coated surface of the moving web or backing.

The foregoing and such other objects and advantages as may appear or be pointed out as this description proceeds are attained in the structures illustrated in the accompanying drawings in which:

Figure 1 is a schematic view illustrating one form of apparatus for carrying out the process of this invention;

Figure 2 is a view similar to Figure 1 of an alternative form of the invention;

Figures 3, 4 and 5 are further alternative forms of the invention which include the electrical feature;

Figure 6 is a further alternative form of the apparatus of this invention for employing vibrating means;

Figure 7 is an enlarged schematic view illustrating a portion of an abrasive article made in accordance with this invention;

Figures 8 and 9 are additional alternative forms of apparatus for carrying out further steps of the process of this invention;

Figure 10 is a further alternative form of apparatus for carrying out one of the methods of this invention; and

Figures 11 and 12 are further alternative forms for carrying out additional methods of the present invention.

The method of the present invention includes as steps thereof the feeding of a web or strip of paper or other fabric at a predetermined rate of speed, applying an adhesive substance to the under side of the sheet, or applying the adhesive coating to one side and then moving the sheet with the coated side out, and simultaneously with the movement of the coated sheet causing a grit or abrasive material to be applied to this side. The sheet or web of paper may be moved so that the adhesive coated side is either presented downwardly or at any angle thereto. The movement of the abrasive grains onto the under side of the backing is done irrespective of the force of gravity and, in fact, directly counter to gravity, and preferably done by imparting relatively high velocity to the abrasive material, thus causing it to impinge upon the adhesive coating. In view of the fact that the abrasive grains are projected through an intervening space from a suitable carrier on to the adhesive coated side irrespective of or counter to the force of gravity, the grains, which are usually somewhat elongated, will assume a position in transit so that the longer dimension thereof will take a position normal to the surface of the backing, thus causing the grains to "stand" on the surface rather than lie flat in greater percentage than when they are deposited by gravity. It is to be understood that this movement of the grains and deposition of them on the coated surface may be carried out in a number of ways.

either by vibration, by an airblast, or by electrostatic or electromagnetic means.

In the alternative forms of this invention later to be described, the method involved includes combining a gravity deposition of mineral on the adhesively coated moving backing with the step of applying the grits irrespective of gravity, this being particularly useful in some of the heavier grits wherein it may be found that the force susceptible of application by an electrostatic or an electromagnetic means is not sufficiently active on the available area of the individual grits to cause an entirely satisfactory result or to move enough of the grits onto the sheet to attain the desired end. In this invention it may be required to apply some of the grit by gravity and later apply some of the grit by one of the methods of this invention or vice versa, but, in any event, the number of grits in the entire finished article which stand erect on the backing will be measureably increased over the ordinary methods heretofore employed for depositing grit on a backing for forming an abrasive article.

This invention produces a very satisfactory piece of sandpaper in which the cutting ability is measurably increased and by the deposition of the grains of sand or grit irrespective of the force of gravity, it is possible to produce an orientation of the mineral as desired and to control the thickness of the abrasive coating much more readily than where gravity alone is relied upon or employed for depositing the grains on the sheet.

The apparatus of this invention may take any one of the forms shown in the drawings and in the form of the invention shown in Figure 1, air pressure is resorted to for producing the mineral cloud and for projecting the mineral onto the moving web.

Referring now more particularly to Figure 1, the flexible backing 6 of paper or cloth or other fabric is trained or fed over a series of rollers 6, 6, and over one of a pair of the squeeze rollers indicated at 7, the other roller 8 of said pair being in contact with an adhesive material contained in a tray or tank 9 by which an adhesive coating is applied to one side of the moving web. After receiving the adhesive coating, the web 6 is trained over rollers 10 and 11 and is brought back over a roller 12 so that the adhesive coated surface of said web is presented downwardly. The web may then be trained over rollers 13, 13, and fed to a suction drum 14, whence it passes into festoons for drying.

The mineral is supplied from a hopper 16 and a conventional outlet 17 which feeds a layer 18 of mineral to a moving conveyor 19. This conveyor 19 is preferably porous and passes over the feeding rollers 20 and 21 and is adapted to move at a suitable rate of speed to supply a sufficient quantity of abrasive grain. In some cases, it has been found advantageous to move the conveyor at a speed substantially the same rate of speed as the web 15, although these speeds are, of course, variables. The rollers 20 and 21 are mounted in the ends of a suitable frame 22 and this frame may be raised and lowered so as to vary the distance between mineral conveyor 19 and the moving web 15. This frame 22 may be supported fixedly at one end, as indicated at 23, and the other end may be raised and lowered by a toggle arrangement 24 activated by a threaded rod 25. Below the conveyor 19 and at the movable end thereof, that is, adjacent to the web 15, there is provided a second conveyor 26 which serves to conduct away excess mineral which flows over the end of the conveyor 19 and which may be returned in any suitable manner to the mineral hopper.

Below the upper flight of the conveyor 19, there are provided two air troughs 27. These air troughs are provided with flat upper walls 28, having slots 29 therein, said slots extending across the width of conveyor 19 and the troughs themselves being connected to a suitable source of air under pressure.

These troughs form in effect elongated jets or nozzles and when so placed below the conveyor belt or frame 22, a small quantity of air is emitted at high velocity which passes through the porous belt or conveyor.

It will be understood that when a blast or blasts of air are delivered from the troughs 27, this blast of air passes through the porous conveyor 19 and blows the mineral from the conveyor against the under side of the flight 18 so that the mineral is caused to strike into the adhesive at a relatively high velocity and become impinged therein. Owing to the projecting of the mineral in this manner through the intervening air space, the individual particles of grit or abrasive material are caused to assume a position parallel to their trajectory, that is, with their longer dimension perpendicular to the surface of the flight 18. In view of the fact that most of the particles of mineral are somewhat elongated due to the manner of production of the same, they will naturally assume this position in movement from the conveyor 19 to the adhesive coated surface of the backing. As they arrive at the adhesive material, they impinge themselves thereon and will thus stand erect in the adhesive, thus forming a sharper contour for abrasive purposes. By varying the rate of speed of the moving backing relatively to the speed of the conveyor and by varying the distance between the conveyor and the backing and the velocity of the air stream, and by increasing or reducing the number of such jets and the quantity of adhesive applied, any reasonable desired thickness of grit layer may be produced during the process and without stopping the apparatus. It will be understood that the excess mineral carried by the conveyor may be dumped into the conveyor 26 and returned by any suitable means to the hopper 16.

Referring now to Figure 3, there is provided the same general arrangement of moving backing, having the flight 30 adhesively coated from the squeeze rollers 31.

Below the flight 30 there is provided a mineral feeding conveyor 19a, receiving pulverulent material from the hopper 16a.

The conveyor 19a is mounted for movement toward and away from the flight 30 similar to the conveyor 19 and, therefore, this structure has not been shown in Figure 2.

As the mineral flows from the hopper 16a it does not always assume a smooth or even distribution on the conveyor 19A, and therefore, it may be desirable to provide a pair of charged electrodes 32, one arranged above and one below the conveyor 19A, for the purpose of spreading the mineral evenly on the conveyor belt. The conveyor 19A in this instance may be non-porous.

When charged electrodes are put in this position they act in principle the same as the charged electrodes used for coating the mineral on the backing. An electrical charge or difference of potential is set up between the electrodes 32. The

[fol. 796]

voltage or difference in potential between those electrodes is maintained great enough to produce a strong static field, but not so great as to break down the insulation between the plates, which insulation may be the dielectric strength of the air or the dielectric strength of the air plus the dielectric strength of any insulating material which may be used to wrap the electrodes.

As the mineral on the conveyor enters the static field between the plates the mineral particles take on the charge of the lower plate, and are repelled to the upper plate where they lose their charge and take on the opposite charge of the upper plate. At this point they are repelled to the lower plate. Since new mineral is being conveyed by the conveyor into the field continuously the static fields soon become supersaturated with mineral particles, and an equilibrium is reached where as many particles are thrown out of the static field as are brought in by the conveyor. By having a down-turned end 32A of the upper electrode the mineral particles that are thrown out of the static field are deflected evenly on the conveyor belt so that a smooth coating of abrasive grit is first placed on the conveyor.

The use of a static field for getting a smooth coating of mineral on the conveyor belt is not necessary to the invention but is an additional means of obtaining evenly distributed abrasive coatings, and is also a means for avoiding the use of any excess mineral on the conveyor. When the mineral is evenly coated on the conveyor at the time it is being coated streaks, thin spots, etc., in the finished product are reduced.

At the same approximate point at which troughs 27 are provided in Figure 1 there are here provided electrically charged electrodes 33 and 34, the electrode 34 being located below the upper flight of the conveyor belt 19A and electrode 33 being disposed above the flight 38 of the backing. A sufficient difference of potential is maintained at electrodes 33 and 34 to produce a strong static field, similarly to that referred to above. This static field moves the mineral from the belt 19A to the underside, which is the adhesive coated surface of the flight 38.

As the mineral enters the static field between the electrodes 33 and 34 it becomes charged with the charge of the lower plate, and is here propelled to the upper plate 33.

It will be observed that in this method of coating the mineral is applied by a force other than gravity. In all other methods of coating sandpaper, known to me, the velocity of the particle is either in whole or part given to it by the force of gravity. In the case of this electrostatic coating the particles are oriented in the static field so that there is a tendency for the long dimension of the mineral to be perpendicular to the electrode plates, and also perpendicular to the web 38, which is being coated. The finished sandpaper product, therefore, contains a substantial percentage of the particles of mineral standing on end rather than laying flat, thereby increasing the cutting properties of the abrasive article.

Excess mineral is dumped onto the conveyor 36, whence it may be returned to the hopper 18a.

Referring now to the alternative form of the invention shown in Figure 3, there are provided the squeeze rollers 36 which apply adhesive to one surface of the moving paper web 37 and the adhesive coated surface thereof is presented downwardly in the flight 38.

In this instance there is provided a hopper 39, having a curved outlet spout 40 whose outlet 41 is presented below the moving web 38. The hopper may be provided with a bracket 42 whereby to receive a threaded member 43, said bracket engaging a guide post 44. In this manner, the hopper may be raised or lowered so as to vary the distance of the outlet 41 from the flight 38 of the backing. A suitable screen 45 may or may not be provided over the outlet so as to cause the distribution of the mineral contained in the hopper. In this instance, the mineral flows by gravity to the outlet 41, but does not pass from the outlet to the adhesive coated backing by gravity, but under the effect of the static charge established between the electrode 46 and the hopper or the screen 45 of said hopper.

The operation of the invention here is much like that of Figure 2, the screen 45 serving the purpose of distributing the mineral and at the same time preventing the large body of mineral in the hopper from forcing it against the coated surface of the backing.

Referring now to the form of the invention shown in Figure 4, there is provided the adhesive coating rollers 47, applying an adhesive coating to one surface of the moving web 48. This web 48 is trained over rollers 49 and 50 so that flight 51 thereof between said rollers is presented in a plane tangential to the surface of a conveyor drum 52 whose lineal velocity is sufficient to furnish the required amount of mineral. This drum is fed from a hopper 53 and forms one electrode of the electrostatic system. The other electrode is indicated at 54 and is disposed above the flight 51. As mineral issues from the gate 55 of the hopper, the drum rotating in the direction of the arrow a, the mineral is carried to a point adjacent to the flight 51 whereupon the electrostatic charge set up between the drum 52 and the electrode 54 will cause a projection of the mineral from the drum onto the coated surface of the flight 51.

Referring now to the alternative form of the invention shown in Figure 5, there is employed here electromagnetic means or a permanent magnet means for moving the grits toward the adhesively coated web. The adhesively coated web is shown at 72 and is fed from a roll 73 over an adhesive coating roller 74. The horizontal flight of the web 72 passes beneath magnet 75 which may be either an electromagnet upon which a variable voltage may be imposed or a permanent magnet.

Immediately below the magnet 75 and the flight 72 of the web, there is provided a source of supply for the mineral, that is, the abrasive material, indicated at 76. This source includes an outlet 77, and the distance between the outlet 77 and the moving web 72 may be varied as desired, or the intensity of the electromagnet, where one is employed, may be varied for changing the thickness of the abrasive coating. The web passes over an idler 78 whence it is fed to festoons not shown.

Referring now to the form of the invention shown in Figure 6, the moving web 86 is trained over a series of rollers similar to the arrangement shown in Figures 1 and 2 so that a horizontal flight 87 of the paper backing is provided, having an adhesive coating on the under side thereof. Squeeze rollers 88 engage the paper backing for applying an adhesive thereto.

In this form of the invention, a mechanical vibrating means is provided which serves to pro-

pel the mineral, that is, the grit, from the grit feeding conveyor 89, which latter receives mineral from the hopper 86, having a gate 91. The conveyor 89 is trained over rollers 92 and 93 mounted in a suitable frame 94, which latter may be mounted for adjustment toward and away from the flight 87 similarly to the conveyor 19 of Figure 1. The conveyor 89 extends below and is separated from the flight 87 of the paper web and travels at substantially the same speed as the paper web.

The conveyor 89 passes between sets of pinch rollers, one above and one below the upper flight of the conveyor 89, as indicated by 95 and 96, and also beneath a pinch roller 97 which bears on the roller 92. The pinch rollers 95 and 96 tend to distribute the mineral evenly over the surface of the conveyor and are so spaced from the rollers 92 and 97 that the portion of the belt 89 between the rollers 95 and 96, and 92 and 97 is permitted to lie slack, whereas the remaining part of the conveyor is substantially taut. This arrangement tends to limit the vibration of the conveyor belt to the zone of application of the mineral to the paper backing, as indicated at 98.

Beneath the portion 98 of the belt 89, there is provided a revolving batter 99 operating on a shaft carried in suitable bearings in the frame 94 and provided with a plurality of radial arms 70 which upon rotation rigidly strike the under side of the portion 98 of the belt, thus throwing or projecting the mineral content thereof against the under side of the adhesive coated paper backing, much in the manner in which the air stream blows the mineral or grit against the paper backing as shown in Figure 1. The batter 69 may be driven in any desired manner from a separate source of power or may be connected suitably with the rollers driving the belt 89, but geared to operate at a greater rate of speed. The rollers 95 and 96 and the roller 97 are separately driven from the belt 89 so as to produce the tautness in the belt, except the flight of the belt indicated at 98.

In Figure 7, there is illustrated an article made in accordance with the present invention. The backing is shown at 99 to which an adhesive coating 81 has been applied, and the grits, greatly enlarged, are indicated at 82 and it is noted that they stand on end in the adhesive coating, thus causing their sharper edges to project beyond the upper or outer surface of the coating, thereby enhancing the cutting ability and increasing the life of the abrasive article. While the article shown in Figure 7 is purely schematic, it will be understood that the mineral actually does take a position substantially normal to the backing and, while all of the grits may not take this position, a large number of the same do and the cutting qualities of the abrasive article are thus greatly increased. Furthermore, by so disposing the grits, it permits of the application of an additional sizing coat or coats to the back and to the front or cutting face of the abrasive material without completely burying the grits and as a thicker coat of adhesive may thus be employed on the cutting face of the abrasive material, the engagement of the adhesive material with the abrasive material is greatly enhanced, thus further tending to increase the life of the abrasive article. Such a sizing coat is indicated at 83.

As previously pointed out where the electrostatic or electromagnetic methods are resorted to in some of the coarser grades of abrasive devices made, it may be found that the electrostatic or magnetic field into which the particles are conducted may not exert on each individual particle sufficient force to cause proper orientation of the particles for the reason that the static effect is substantially proportional to the area of the particle, and the coarser the particle, the smaller the area of effect per weight. Therefore, as larger grits or sizes of particles are employed, increased force is required to move the particle and for some purposes, insufficient increase in force results because of the reduced area per weight. Therefore, in such cases a form of the invention, as shown in Figure 8, may be resorted to wherein the mineral is applied to the adhesively coated backing in part by gravity and in part by electrostatic or electromagnetic means.

In view of the fact that the electrostatic and electromagnetic means may for some purposes be alternatively employed, I have illustrated in Figure 8 merely the electrostatic elements though it will be understood that the electromagnetic means of Figure 5 may be employed in the same manner.

Referring in detail to Figure 8, I have illustrated a web of paper 84 coming off a roll 85 and passing through an adhesive coating device illustrated in general at 86. The web 84 is thence trained over rollers 87, 87a, so that it has a substantially horizontal flight 87b, which receives grits in the desired amount from an ordinary conveyor 88, said conveyor receiving grits from the hopper 89. The web of paper thence is carried downwardly to a horizontal flight 90 by the provision of rollers 91, 91 and adjacent one end of this flight, I provide the conveyor 92 receiving additional grits from the hopper 93, which may be adjustably mounted similar to the conveyors hereinabove described, said conveyor 92 passing beneath the flight 90 of the paper web. As the web passes over the rollers 87a and 91, a quantity of the mineral deposited from the conveyor 88 onto the web will drop off, and, for conveying away this excess mineral, I provide a transversely running conveyor 92a arranged between the flight 90 and the conveyor 92. Beneath the upper flight of the conveyor 92 and above the flight 90 of the web 84, I provide static electrodes 94 and 95, or may provide an electromagnet similar to that shown in Figure 5 which will cause grit coming from the hopper 93 to be applied counter to the force of gravity onto the under surface of the flight 90. A conveyor 96a may be employed for carrying off the excess mineral from the conveyor 92.

In the operation of this form of the invention, it will be understood that a desired proportion of mineral applied by gravity to that applied by force other than gravity may be determined by actual operation so that the desired quantity of the abrasive grits is properly applied to the paper web.

It may be necessary in some of the very coarse grains to additionally apply grit to the moving web and this may be done by providing an additional conveyor similar to that indicated at 92 and additional electrodes, or may be accomplished by additionally applying by gravity grits to the paper web just before it passes on to the festoons.

Figure 9 illustrates the alternative forms suggested in connection with Figure 8, that is, wherein electrostatic or electromagnetic means, or any other means counter to gravity, is employed for applying the grits and in Figure 9 the paper web

[fol. 798]

is indicated at 98a having a horizontal flight 97a disposed below a conveyor 98a. In this instance, the grits are deposited from the conveyor 98a by gravity, and the orientation of the grits is assisted by a plate electrode 96. The paper web may then be carried in position so as to provide a horizontal flight 99 and an electrostatic or electromagnetic or other grit applying means for applying grit counter to gravity may be employed at one or more points as indicated at A and B, wherein the conveyors 100 and 101 convey grit from suitable hoppers 102 and 103, and electrodes 104, 104 and 105, 105 serve to apply the grit.

Referring now in detail to Figure 10, there is further illustrated there an apparatus for applying the grit to the adhesively coated backing by an electromagnetic means. In this form of the invention a moving web is provided indicated at 106, this web being a flexible strip of paper which is suitably adhesively coated by a mechanism indicated generally at 107.

The moving web thus adhesively coated is carried over a roller 108, thence over a roller 109, said roller 109 being mounted on a shaft carried in a bearing arm or arms 110 pivotally mounted at 111, whereby the roller 109 may be raised and lowered in the substantially vertical plane of the arrows 112, thus permitting the lower flight 113 of the paper web to be elevated or depressed, as the case may be.

Mineral is deposited from a hopper 114 on to a conveyor 115 trained over rollers 116 and 116a, the upper flight 117 of said conveyor passing beneath the roller 109 and the moving web, and conveying mineral, that is, the grit, to a point adjacent to the roller 109.

Preferably immediately below the axis of the roller 109 and below the upper flight 117 of the conveyor 115 I provide an electromagnet 118 which is so mounted that its magnetic flux passes through the conveyor and causes the mineral particles to stand erect, as indicated at 119, as they move along with the upper flight of the conveyor. While the mineral particles are thus standing erect they come into contact with the adhesively coated side of the paper backing and are thus picked up by it and conveyed away, the backing being trained over rollers 120 and carried to the festoons similarly to the other forms of the invention. It will be observed that the angularity of the lower stretch 113 of the paper web is such that it lies upwardly to the conveyor 115. In this way the particles of grit adhering to the paper are not knocked down by other particles remaining on the conveyor, it being understood that the grit is fed somewhat in excess of the required amount so that an adequate amount will be deposited on the adhesively coated side of the backing. The excess mineral drops off the conveyor 117 and is carried to a collecting means by a conveyor 121.

It will be understood that the amount of mineral fed from the hopper, the strength of the electro magnet, that is, the strength of the flow current transferred and the position of adjustment of the roller 109 may all be properly correlated for obtaining the desired grade of finished article.

It may be desirable that a certain amount of pressure be exerted on the erect particles of mineral so as to cause them to impinge upon the adhesively coated side of the paper and thus by manipulation of the arms 110, an adjustment of the pressure of the roller 109 may be attained.

It will be understood that while the electrostatic and electromagnetic means for coating counter to gravity are illustrated in Figures 8 and 9, the mechanical means hereinabove described may be conveniently employed in these locations without departing from the spirit of the invention. However, the reason the electromagnetic and electrostatic elements are particularly shown here is that the difficulty of counter coating successfully with the coarser grains is more likely to arise with these elements than with the vibrator or air blast heretofore described.

It will be understood that the forms of the invention disclosed herein employing electromagnetic fields are suitable for use with magnetically responsive materials but that other grit or abrasive material may be coated with a magnetically responsive film which would render the grit responsive to the action of the magnetic or electro-magnetic fields.

In the actual production of this invention, particularly where an electrostatic field is employed, some grit sizes require the employment of very high voltages and in employing such high voltages it will be appreciated by those skilled in the art that this involves the construction and installation of special electrical apparatus for producing and maintaining the high voltages, and at the same time necessitates the provision of adequate protection for workmen engaged in the production of sandpaper or the like abrasive article under these conditions.

The form of the invention shown in Figure 3 hereinabove described, is found to be of value in that lower voltages may be employed for producing deposition and orientation of the particles of grit, inasmuch as there is a constant mechanical force exerted on the particles tending to move them toward the sheet to be coated. It is to be noted that the screen disclosed in Figure 3 may be omitted and a controlled supply of the particles to the outlet afforded in any convenient manner. Furthermore, the mounting of the hopper in Figure 3 may be adjusted so that the outlet is moved toward or away from the sheet as desired. In this instance, due to the force of gravity on the mass of abrasive particles contained in the hopper bearing on those adjacent th outlet, the particles are moved upwardly toward the sheet by the mechanical force thus exerted. Coupled with this, an electrostatic field of a relatively lower voltage or difference of potential may be employed.

Owing to the fact that the structure of Figure 3 involves the provision of means for obtaining a nicety of control and balance which might readily become out of control in use, I have provided the forms of the invention shown in Figures 11 and 12.

In the structure of these figures it is possible to control to a nicety the mechanical and electrical forces exerted to obtain the desired result, namely, orientation of the particle on the adhesively coated sheet with its major axis perpendicular to the sheet.

Referring now to Figure 11, it will be observed that a flight of paper follows the path similar to that shown in Figure 6, the paper being indicated at 97a, and being coated on one side from a tank 96a and supplied to the coating apparatus with one flight 97a of the paper having its adhesively coated side presented downwardly. Beneath the adhesively coated flight 97a, I provide a conveyor 98a on which grit particles are deposited from a controlled hopper 98a having

a gate 61a. The conveyor 58a supplies the grit particles in a direction to the left as viewed in Figure 11 to a point below the adhesively coated flight 57a of the paper web.

Beneath the conveyor 58a adjacent to the point of deposit of grit on the sheet, I provide a beater 68a, similar to that shown in Figure 6. The beater and conveyor are mounted on suitable supporting means comprising the arm 64a, and toggle means 66a for adjusting the arm and the conveyor.

Also supported from the arm 64a I provide an electrode 70a, which has a complemental electrode 71a located above the horizontal flight 57a of the paper web, thus the beater acts to raise the grit particles from the conveyor 58a and may be regulated so as to exert a force insufficient for causing the particles to reach the adhesively coated sheet 57a, but when the electrical field is established between the electrodes this field combining its forces with the mechanical force exerted by the beater will serve to cause the particles to be propelled on to the adhesively coated surface and due to the polarisation effect of the electrostatic field to orient the particles with their major axes substantially perpendicular to the adhesively coated sheet.

It will be understood that by proper control of the electrostatic field and the mechanical forces imparted to the particles by the beater 68a that quite as desirable effects can be obtained in the ultimate abrasive article as are obtained in the other forms of the invention already described. Furthermore, this form of the invention permits of the employment of a much lower difference of potential or voltage between electrodes for obtaining the desired result.

Referring now to Figure 12, there is provided a web of paper trained over rolls 6a and coated at 8a by rolls 7a and 8a, this web being so trained over additional rolls as to present an adhesively coated flight 18a with the adhesive presented downward.

Beneath the flight 18a I provide a supporting arm 22a having mounted thereon a conveyor 18a receiving sand from a hopper 29a. The arm 22a may be adjusted by a toggle mechanism indicated at 24a and the conveyor 18a conducts grit from the hopper 29a to the point beneath the flight 18a of the adhesively coated web.

At this point I provide a plurality of nozzles 27a delivering an air blast upwardly through the conveyor 18a, said conveyor preferably being of a screen character permitting the air stream to pass through the conveyor and tend to raise the grit particles into the space between the conveyor and the adhesively coated surface of the flight 18a.

Above the flight 18a I provide an electrode 29a and the air blast nozzles 27a may serve as another electrode supplemental to the electrode 29a.

Thus an electrostatic field may be established between the electrode 29a and the nozzles 27a, but of insufficient force to, operating alone, lift the grit particles and deliver them to the adhesive sheet, but coupled with the agitation of the particles caused by the air blast, the combined forces of the air blast and the electrostatic field serve to deposit, orient and distribute the particles in the desired position on the adhesively coated flight 18a.

If desired, a separate electrode 27b may be added instead of employing the nozzles 27a as electrodes.

I wish to point out that where the expressions "electromagnetic" and "electrostatic" are employed in the specification, I refer to the employment as well of a permanent magnet or some other form of static charge or magnetic charge which will perform the function.

Having thus described my invention and illustrated its use, what I claim as new and desire to secure by Letters Patent is:

The method of coating a backing with a pulverulent material of elongated dimensions which includes as its steps forming said material from a bulk source of supply into a preliminarily distributed layer arranged in a plane in substantial parallelism to the backing and the propulsion of the pulverulent material from said layer under relatively high velocity onto one surface of the backing in a direction counter to the force of gravity for effecting an orientation of said material with its elongated dimension substantially erect in respect of said backing surface.

RICHARD PAUL CARLTON.

[Vol. 800]

March 20, 1945. R. P. CARLTON ET AL 2,371,605

COATING, PARTICULARLY FOR MANUFACTURE OF ABRASIVES

Original Filed June 1, 1933 5 Sheets-Sheet 1

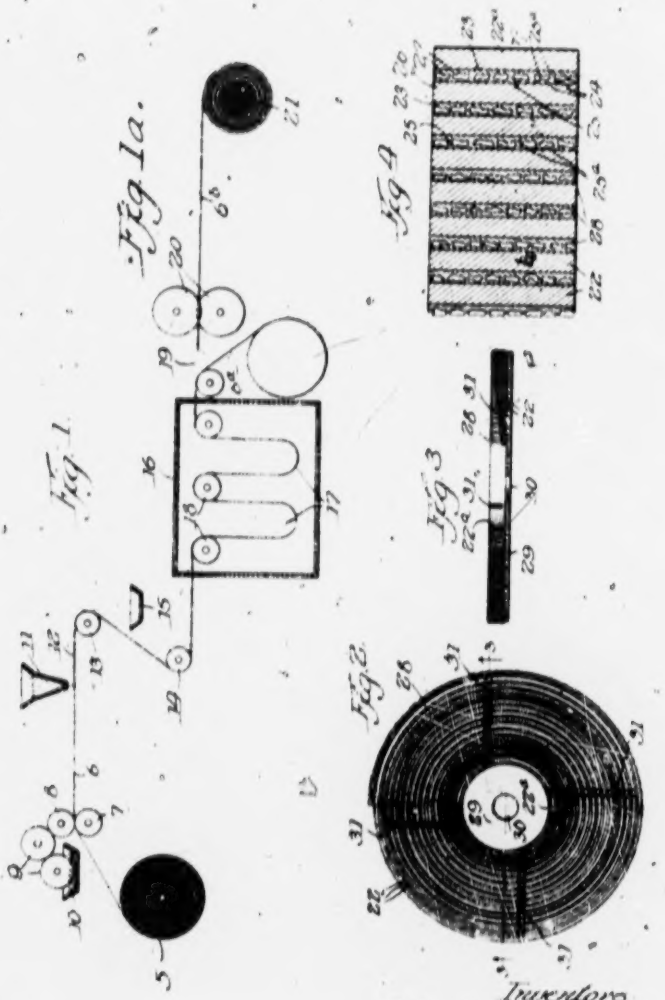

Inventors
Richard Paul Carlton &
Theodore Joseph Miller
By Paul Carpenter
Atty.

March 20, 1945. R. P. CARLTON ET AL 2,371,605

COATING, PARTICULARLY FOR MANUFACTURE OF ABRASIVES

Original Filed June 1, 1933 5 Sheets-Sheet 2

Fig 5.

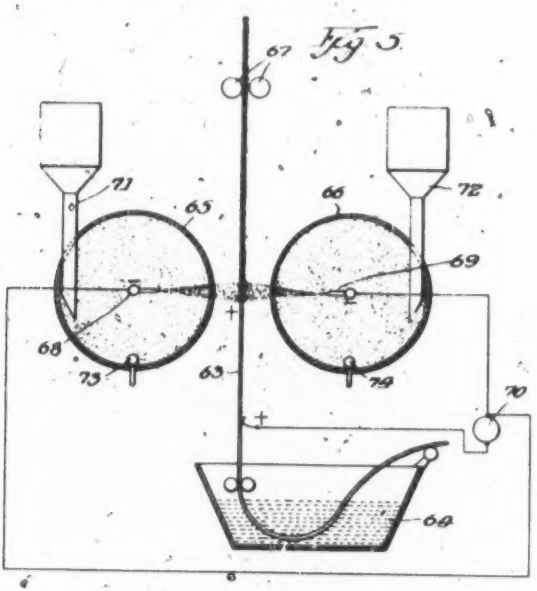

Fig. 6.

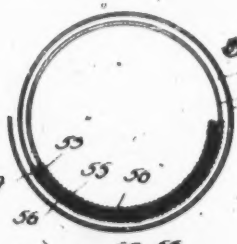

Fig 7

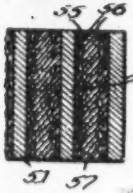

Inventors:
Richard Paul Carlton
Theodore Joseph Miller
Paul Carpenter
Atty

[fol. 802]

March 20, 1945. R. P. CARLTON ET AL 2,371,605

COATING, PARTICULARLY FOR MANUFACTURE OF ABRASIVES

Original Filed June 1, 1933 5 Sheets-Sheet 3

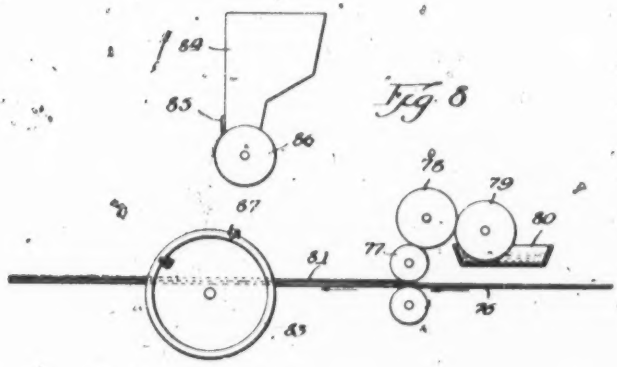

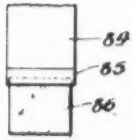

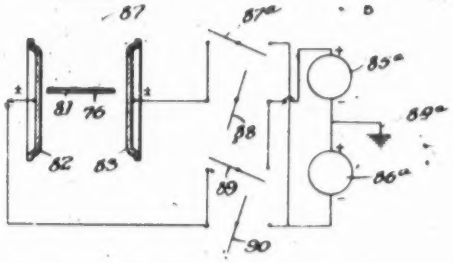

Inventors:
Richard Paul Carlton
Theodore Joseph Miller
By Paul Carpenter
Atty

[fol. 803]

March 20, 1945. R. P. CARLTON ET AL 2,371,605

COATING, PARTICULARLY FOR MANUFACTURE OF ABRASIVES

Original Filed June 1, 1933 5 Sheets-Sheet 4

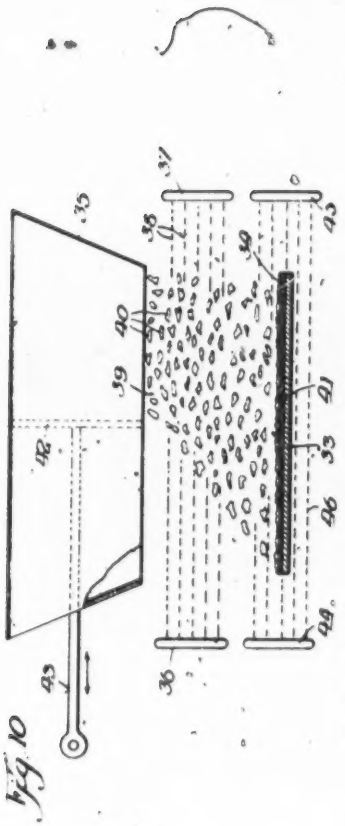

Fig. 10

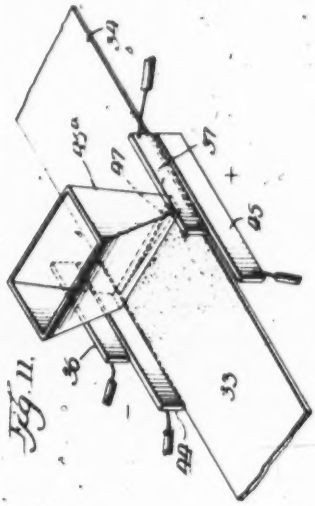

Fig. 11.

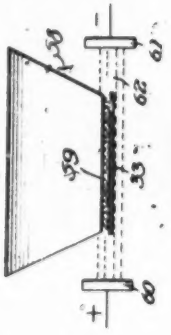

Fig. 16

Fig. 13

Inventors
Richard Paul Carlton
Theodore Joseph Miller
By Paul Carpenter
Atty

[fol. 804]

March 20, 1945. R. P. CARLTON ET AL 2,371,605

COATING, PARTICULARLY FOR MANUFACTURE OF ABRASIVES

Original Filed June 1, 1933 5 Sheets-Sheet 5

Fig. 14

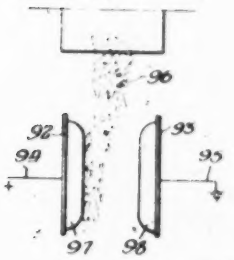

Fig. 15

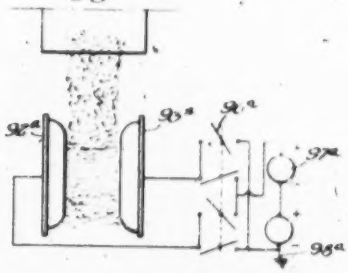

Fig. 16.

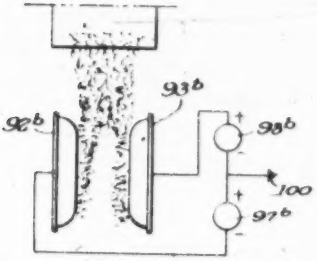

Fig. 17.

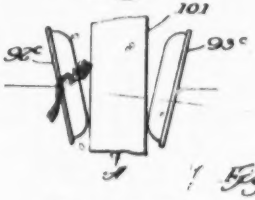

Fig. 17a

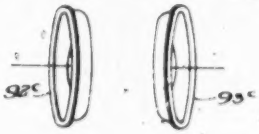

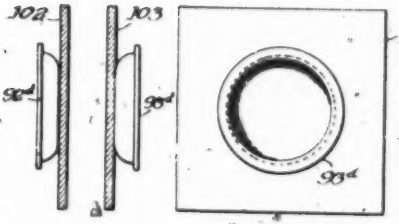

Fig. 18.

Fig. 18a.

Fig. 19.

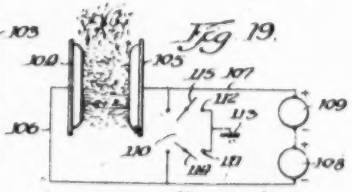

Inventors:
Richard Paul Carlton &
Theodore Joseph Miller.
By Paul Carpenter
Atty.

Patented Mar. 20, 1945

2,371,605

UNITED STATES PATENT OFFICE

2,371,605

COATING, PARTICULARLY FOR MANUFACTURE OF ABRASIVES

Richard Paul Carlton and Theodore Joseph Miller, St. Paul, Minn., assignors to Minnesota Mining & Manufacturing Company, St. Paul, Minn., a corporation of Delaware

Original application June 1, 1933, Serial No. 673,886. Divided and this application March 31, 1933, Serial No. 290,550

8 Claims. (Cl. 117—17)

This application is a division of our copending application, Serial No. 673,886, filed June 1, 1933.

This invention relates broadly to coating and coating materials especially in sheet form, such as in the manufacture of abrasives, and the present invention among other things finds utility in one of its phases in the manufacture of abrasive wheels or discs, and while the invention in one of its forms is illustrated as adapted for coating and forming an abrasive disc, it will be understood that certain other phases of the invention are of quite general application and may be adapted for other purposes, such, for example, as a method of coating roofing material with pulverulent mineral.

This invention, as will hereinafter appear, finds especial utility in the production of grinding discs wherein the abrading surface is on a side thereof rather than on the periphery; and the invention also finds utility in coating roofing material so that particles of mineral deposited thereon are caused to lie flat, that is to say, with their major dimensions substantially parallel with the surface of the backing.

The customary procedure generally resorted to in the manufacture of abrasive wheels, discs and the like generally includes the mixing of an abrasive grit, such as aluminum oxide, silicon carbide or emery, with a suitable bonding material and then placing the mixture in a mold. The final setting up of the bonding material is then effected by curing at a sufficient temperature to cause the bond to flow and take a firm grip of the abrasive grit. Several different forms of the adhesive or bonding material are used, the more common being that known as a vitrified or ceramic bond. In making such a wheel it is necessary to fire the wheel, that is to say, subject the mixture of bonding material and grit to a sufficiently high temperature to cause the bonding material to flow and thus, in effect, form a porcelain bond between the various particles of grit. Obviously, such a wheel or disc is inflexible, broadly, and will not stand shock or sudden thrusts.

It has been proposed to employ as substitute bonds for the vitrified or ceramic bond, materials such as rubber, shellac, sodium silicate, natural and synthetic resins and the like.

In producing an abrasive disc or wheel, aside from the problems of choice of bond, there is also the necessity of controlling the ratio of bonding material to abrasive material, and it is also highly desirable that, in certain forms of the abrasive wheel or disc structure, more or less porosity or voids in the wheel acting as clearances for the material being abraded be provided so that fast and continuous cutting, together with reduction in temperature of the wheel when engaging the work, should be attained. In obtaining these desiderata it is found that the porosity of the wheel in the case of a molded structure tends to weaken the disc or wheel and, due to the porosity, the structure does not have sufficient bond to firmly anchor the grit therein.

The principal objects and advantages of the present invention reside in the provision of an improved method of manufacturing an abrasive wheel, disc or the like having characteristics in its structure which increase the cutting ability, strength and durability of the device; the provision of an improved method of manufacturing an abrasive article such as a wheel or disc for abrading purposes, in which the cost of manufacture is considerably reduced, with the attendant accomplishment of the desired control of ratio or bond, that is to say, adhesive, to the mineral or grit, and to provide such an improved method in which the same may be carried out as a substantially continuous process, thus simplifying the manufacture and reducing the ultimate costs; the provision of an improved method of manufacturing abrasive wheels and discs in which a fabric such as paper, cloth or the like may be employed as a carrier for the bond and grit and in which the ultimate size of the abrading wheel or disc may be determined easily and by a substantially continuous method; the provision of an improved form of abrading wheel or disc wherein a controlled porosity of the structure is obtained and wherein the ratio of adhesive material to grit is substantially uniform throughout the entire wheel or disc; the provision of an improved abrasive article such as a wheel or disc wherein the grit particles are oriented so that their most effective cutting edges are presented at the abrading surface and thus are brought into contact with the work more efficiently; the provision of an improved method of manufacturing abrasive discs, wheels and the like in which the production of the abrasive article may be carried out on existing sandpaper type of equipment, with the subsequent convenience of shortening the required time for producing various sizes of abrasive wheels and discs.

A further advantage of this invention resides in that, as distinguished from the molding process of making abrasive discs and wheels, which requires that the abrasive grit and bonding material be mixed in the proper ratio, then molded then heated, and therefore requiring each sepa-

[fol. 806]

rate size of wheel or batch to be handled completely individually from the beginning to the end of the entire fabrication process, the present invention permits of the carrying out of a substantially continuous process similar to the manufacture of sandpaper and that continuous lengths of the material may be stored in drums or rolls from which the desired width of strip may be cut which is to determine the ultimate thickness of the wheel, it being assured at all times that the ratio of abrasive material to bonding material will remain substantially uniform throughout the particular wheel or disc structure which it is desired to form.

The present invention also permits of the manufacture of the basic abrasive material on standard sandpaper equipment and that this material may, after having been prepared, be preserved in stabilized form for use in manufacturing wheels as desired, the process and the article thus permitting of the production of one or more wheels of a desired size and texture, that is to say, grit size or number, at less cost and more conveniently than is possible with the previous processes known to us.

It has also been suggested in the prior art that abrasive discs and wheels be made up of a series of superposed discs of ordinary sandpaper, emery paper or cloth or the like glued together and subjected to pressure and heat, but in such prior process and article made therefrom known to me considerable waste occurs in that the discs must be cut from a standard made piece of sandpaper, and the portion thus made and not used must be thrown away. The present invention distinguishes from such process in that there is substantially no waste of abrasive material which is attendant upon any dieing out process, hitherto suggested.

The present invention also has as one of its objects the provision of an improved method of producing a flexible abrasive article and the resultant article so that, as desired, the manufacturer may produce an abrasive article of the desired degree of flexibility, and, at the same time, have a substantially homogeneous structure with a substantially continuous abrading surface.

The present invention also contemplates the employment therein and for the production of the abrasive article of a new process of orienting the abrasive grains so that their sharper points will be presented at the abrading surface. In ordinary sandpaper the abrasive grains are deposited on the adhesive coated sheet by gravity and as a result lie in haphazard fashion in the adhesive.

In the present invention it is desirable that the abrasive grains be oriented so as to present the longitudinal axes of the individual particles in a position substantially parallel with the plane of the sheet and substantially perpendicular to the margins thereof so that when the abrasive article is formed from a sheet of abrasive material made according to this invention, to form an abrasive disc, the sharper points of the grains will be presented at the margins at each of the convolutions of the disc.

This orientation of the grains may be conveniently accomplished by the action of an electrical field, and it is therefore one of the further objects of this invention to provide an improved method of and apparatus for subjecting the abrasive grains to the action of an electrical field for the purpose of attaining the desired orientation of such particles; the invention further has as one of its objects the improved method of and apparatus for subjecting the abrasive grains during the flight by gravity to the sheet to the effect of an electrical field, preferably of the electrostatic type, for aligning the particles with the lines of force of the field, which for convenience be substantially parallel with the surface of the abrasive sheet, thus orienting the grains in the proper desired manner as they are deposited thereon.

This invention also contemplates the improved method of incorporating the grit particles in an adhesive in plastic form, and while the same is deposited together with the grit on a flexible backing subjecting the incorporated grit and adhesive to the action of an electrical field for aligning the particles and orienting the same in the desired manner.

The method involved in the present invention may be carried out in a number of alternative steps, depending upon the form and characteristics as to flexibility and denseness which it is desired to impart to the finished article.

A preferred method of producing the abrasive article of this invention includes the selection of a fabric, preferably paper, of a desired and suitable weight, coating this paper with a bonding material and a suitable grit. For our purposes, we prefer to employ a waterproof bond, and, for example, this may be any of the bonds described and claimed in the patents to Okie 1,868,627, 1,865,028, 1,635,801, Carlton 1,775,631, 1,736,564.

This paper thus coated with a waterproof bond and a suitable grit may be of the same characteristics as the waterproof sandpaper now known to the trade as "Wetordry."

The coated fabric, preferably paper, having the grit contained in the adhesive layer may be provided with a light or heavy sizing coat, depending on the use to which the material is to be applied, though in most instances a sizing coat may be omitted.

After the bond and adhesive or grit have been applied, the material is then festooned for a sufficient period of time to dry or partially solidify the adhesive. It is preferable that the adhesive be not set to its final condition at this time but to aid in handling the adhesive should be dried to a degree which will prevent accidental displacement of the grit.

The abrasive sheet thus formed may be rolled into what are known as jumbo rolls and may be stored until required for slitting into suitable widths. When it is desired to complete a grinding disc with this material the same may be slit to any desired width which is to be the depth of the disc or wheel and then wound into rolls of the required diameter. Owing to the fact that the adhesive material is not entirely set when the sheet is wound into a roll, the disc or wheel thus formed may be placed in an oven for further drying and for completely setting up the bond.

By regulating the tension of the strip of abrasive material as it is wound into disc-like form the compactness and resultant flexibility of the final product may be desirably controlled.

It will be understood, of course, that the resultant flexibility of the article is more or less dependent upon the type of adhesive employed, and that by controlling the flexibility of the adhesive and the tension upon winding the ultimate flexibility of the article may be regulated. As to the waterproof qualities of the article, excellent results may be obtained by employing any of the binders disclosed in the patents mentioned herein.

In the actual finished disc material thus produced particularly where the strip of adhesive material is relatively loosely wound to form a disc, the convolutions thereof will afford clearance spaces, though they may at numerous points be adhering together by virtue of the adjacent layers of the adhesive. In the actual finished article we thus are able to produce an abrading surface which has sufficient flexibility as to binder and composite to facilitate surface sanding, as it is called, and also to facilitate clearing of the wheel when it is in use.

We have found that in some cases of flexible discs or wheels it may be desirable to cement the layers or convolutions of the disc together, but this is not the preferred practice for the normal surface sanding job, and we have found that for such purposes merely winding the strip of material upon itself and then attaching it to a suitable backing, preferably flexible in nature, will produce a grinding wheel or disc giving a desirable flexibility and an efficient cutting surface.

In instances where it is desired to make a solid wheel, that is, a relatively inflexible wheel or disc, it may be desirable to cement the laminations, layers or convolutions, as they may be termed, and this may be accomplished by interposing a sizing coat as the strip is wound into the disc form. It also may be desirable in some instances to apply the sizing material in a relatively heavy coating and to subject the article to heat for causing the coating to flow, and thus relatively intimately connect adjacent layers of the abrasive material.

This operation may also be accomplished when the disc is wound by immersing the same in a bath of adhesive size to permit the adhesive material to flow of capillary action between the laminations or convolutions of the disc.

One of the important factors which effect flexibility when the disc is not of the solid type is the degree of tightness of winding, and thus by relatively loosely winding the strip of adhesive material it is possible ultimately to obtain a very flexible abrasive disc.

It is important in the production of a grinding or polishing disc or wheel of the character herein disclosed that the ratio of mineral grit to adhesive be controlled to produce the most desirable coating results and also that the uniformity of this ratio throughout the disc be maintained. By the abrasive article of this invention and the method of manufacturing the same, we are enabled to attain a high degree of efficiency in cutting operations of the disc and to give to the abrasive article a substantially uniform effective abrasive surface throughout, so that as the same becomes worn in service it yet renders the same efficient cutting and/or abrading or polishing functions.

It will be understood, of course that dependent upon the desired characteristics of the finished product, we may employ fine, medium or coarse grits and that, correspondingly, the thickness of paper or other fabric employed and the ratio of adhesive to grit or abrasive particles must be controlled in each instance to the desired degree. In certain instances we applied the adhesive and abrasive coatings to both sides of the backing.

In selecting an adhesive material, we have obtained excellent results with adhesives formed as composite materials from Bakelite, that is, phenol and formaldehyde and other synthetic resin binders, rubber, shellac and the like, it being understood that these materials may be made into a liquid adhesive and can be further molded or softened by subsequent flowing under heat in such manner that a thorough setting or curing of the adhesive is accomplished without detracting from the flexibility thereof.

One example of an adhesive which is suitable for our purpose is that substantially according to the following formula:

	Parts
Bakelite resin	4
Thinner (denatured alcohol)	1

This composition is agitated very thoroughly until a creamy fluid possessing some tackiness is produced. This adhesive is then applied to the sheet which then receives the abrasive material.

In the case of a Bakelite resinous material, the adhesive is dried after having received the mineral either on the racks or festoons or at some other point in the production of the abrasive strip, and we prefer to employ temperatures ranging from normal atmospheric room temperature to approximately 140 degrees Fahrenheit, depending on the length of time of drying. In this drying operation the temperature is maintained at such a point that the thinner or solvent only will be driven off and thus no appreciable hardening or solidifying reaction takes place in the resin at this time. When the strips are coated with this material together with a binder, heat treated as set out above and then wound into discs or wheels, they may be further subjected to heat which causes a flowing of the resinous binder and thus sufficiently unites the several convolutions or laminations of the wheel. Of course, if it is desired to make a substantially rigid wheel in this manner, same may be tightly wound and also subjected to pressure as well as heat subsequently.

When employing a synthetic resinous material such as a Bakelite resin, the same is thinned with a suitable thinner and coated on the sheet in the same manner as that employed in conventionally forming sandpaper. The grit is then applied as quickly after the binder application as may be practicable. The thinners are evaporated at normal temperatures, and the bond thereupon solidifies to the consistency of a varnish partially dried but tack free.

The abrasive article in this condition may then be stored in large rolls and cut or slit into ribbon disc portions as required.

In order to insure flexibility of the abrasive article during handling, it is preferred that the rolls be stored in a humid atmosphere, so that the article will be possessed of flexibility during the heating operation.

After the abrasive material is cut and formed into ribbon discs, the bond may be toughened by further heat treatment at, say, 180 to 185 degrees Fahrenheit for approximately fifteen minutes, which produces a flexible consistency and is suitable for some purposes, or, we may employ temperatures ranging from 250 to 300 degrees Fahrenheit for a period of time of from fifteen minutes to one hour to produce a relatively hard bond in which there is substantially no flexibility in the binder coat itself. Where a flexible binding coat is desired, a proper regulation of the temperatures and employment of suitable modifiers in the Bakelite resin will give satisfactory results.

It will be understood that the preference to storing the abrasive in large rolls, jumbo rolls, as they are called, is that sometimes it is difficult to synchronise the heating operation with the

drying festoons, and for some purposes it is preferred that the abrasive sheet as it is formed be placed in jumbo rolls so that it may be slit to the desired widths as required.

In connection with the foregoing formula we have secured a flexible abrasive strip to be wound into a disc or wheel shape by employing a Bakelite material which does not produce a complete reaction to rigidity or by keeping the temperature below 212° F. and reducing the time of heat treatment.

For the purposes of this invention we prefer to employ a flexible binding material on the flexible backing, but it is to be understood that a satisfactory flexible wheel or disc may be produced employing a relatively less flexible binder by keeping the layers or laminations of the wheel separated.

We have made satisfactory abrasive wheels or discs by employing an adhesive of the varnish type such as is disclosed in the patents to Okie hereinabove referred to, and we have also employed as a binder the material disclosed in the application of Carlton and Oakes, S. N. 660,319.

Where rubber, shellac or synthetic resins other than Bakelite are employed, we also prefer to heat treat the same in the final setting or, if necessary, after first applying the binder to the strip which is to be later wound into the disc form. With rubber, sulphur is added in desired amount to the adhesive material so that the vulcanization of the binder takes place in the heating step.

Under some circumstances, in order to prevent starving of the bond between the grit and the sheet, it is desirable to apply sizing coat to the back of the sheet, and this may be done during the winding of the sheet or after the original process of making the sheet simultaneously with the application of the adhesive and grit.

The outstanding advantages of the present invention, particularly where the same is wound into a roll to form a disc or wheel, reside in that we are enabled to produce a laminated abrasive structure in which the abrading surface presents a more definite and more uniform porosity due to the laminations and due to the spot contacting of the adhesive on one layer with the adjacent layer, and thus producing a greater proportion of voids than is possible or obtainable where abrasive grit and a bond are molded even where equal ratios of bond to grit are employed. Our invention also produces a laminated abrasive structure having an increased strength due to the incorporation therein of the coated backing of fabric such as paper or cloth, which adds to the strength of the entire wheel making the same less brittle and more flexible and permitting of thinner wheels to be prepared than by any other prior method known to us.

Another distinct advantage of our invention resides in the fact that the mineral grits, owing to their elongated nature, may be oriented on the abrading device so that their sharp points are presented at the abrading surface. For some purposes it is desirable to deposit the abrasive grit by an electrical field or other electrical action, such as by an electrostatic field, in such a manner that the grits will become oriented with their major axes parallel to the surface of the sheet and perpendicular to the abrading surface, particularly where the grits are placed so that their major axes are perpendicular to the margins of the strip from which the wheel is wound. We shall describe such a process of deposition of the grits more fully hereinafter.

It will be understood, of course, that after the abrasive strip has been wound to the desired diameter and with the desired degree of tightness, a suitable disc backing may be affixed by a waterproof binder if desired on one surface of the resultant abrasive disc so that the disc may be mounted on a suitable shaft for imparting rotation thereto.

The several methods which may be employed in the manufacture of the abrasive article itself are illustrated in the accompanying drawings, in which—

Figure 1 is a schematic view of an apparatus which may be employed for producing the abrasive article of this invention.

Figure 1a is a schematic view of a slitting and winding apparatus which may be used with the apparatus shown in Figure 1.

Figure 2 is a plan view of an abrasive disc made according to this invention.

Figure 3 is a transverse sectional view taken on the line 3—3 of Figure 2 looking in the direction indicated by the arrows.

Figure 4 is an enlarged transverse sectional view taken on the line 3—3 of Figure 2 looking in the direction indicated by the arrows.

Figure 5 is a schematic view of apparatus for coating one or both sides of the abrasive article.

Figures 6 and 7 are fragmentary sectional views of an alternative form of an abrasive article made according to this invention.

Figure 8 is a schematic view of an alternative form of apparatus for securing orientation of the abrasive particles.

Figure 9 is a view showing the apparatus of Figure 8 from another aspect.

Figure 10 is an elevational schematic view illustrating alternative apparatus for carrying out the step of orientation of the abrasive particles.

Figure 11 is a perspective view of an alternative form of apparatus of this invention.

Figure 12 is an elevational view of a still further modified form of the invention.

Figure 13 is an enlarged sectional view of a sheet illustrating the alignment of the abrasive grains thereon.

Figures 14, 15, 16, 17, 17a, 18, 18a and 19 are all diagrammatic views of alternative forms of the invention shown in Figures 8 and 9.

Referring now more particularly to the drawings, and first to Figure 1, there is shown a roll of fabric such as paper or cloth 5, from which the web 6 is unwound over an idler roller 7, to receive from a coating roll 8 a layer of the adhesive material delivered by the series of feed rolls 9 from a tank 10. The web 6 is fed beneath a hopper 11 from which is supplied a quantity of comminuted abrasive material 12 by gravity, which may be suitably regulated in any desired manner to determine the thickness of the grit layer. The positioning of the abrasive material may be controlled at this point by the use of electrical orienting apparatus as shown in Figure 8 and hereafter more fully described. The sheet or web 6 is then trained over a roll 13 and reflexively bent upon itself by a roll 14, some of the grit in excess of that desired being removed by falling by gravity into a container 15. The web 6 with the layer of grit secured thereto by an adhesive, waterproof if desired, is then fed into a drying room or oven 16, and arranged in festoons 17 by the provision of rolls 18 in said drying room.

The temperature of the drying room is maintained at a degree which will only partially set

the adhesive sufficiently to permit handling of the abrasive coated strip or sheet indicated at 6a as it leaves the drying room. At this point Figure 1 shows the sheet as broken, indicated at 6b, inasmuch as it may be desired to store the resultant product at this point before continuing the same to the slitting apparatus. However, if it is desired to have a continuous making process, then the sheet or web is supplied to slitting apparatus represented by the cutting knives 20, as shown in Figure 1a. These knives may be arranged at any convenient distance apart, depending on the width or thickness of the strip to be cut and ultimately wound into the abrasive disc.

From the slitting apparatus the several resultant strips of abrasive sheet material may be fed to a mandrel 21, on which they may be wound into the final abrasive disc elements producing the articles such as shown in Figures 2, 3 and 4.

It will be understood that while the strip shown at 6b in Figures 1 and 1a is wound with the abrasive coated side outwardly, thus leaving an outer abrasive coated surface exposed at the last convolution, the disc may be as readily wound in the opposite direction so that the abrasive coated surface of each lamination will be presented inwardly. Inasmuch as these discs are intended to grind on one of their side faces, and as a substantially continuous abrasive coated surface is thus afforded, the discs may be wound either way desired.

It is also to be understood that by placing the strip 6b under more or less tension as desired, a tighter or looser wound disc may be obtained.

When the abrasive material is deposited by gravity as shown in Figure 1, it will be understood that the abrasive grains will be largely lying haphazard on the abrasive surface, though a large number of them will be oriented by the contact of the freshly coated surface with the roll 14, so that when the strip 6b is wound into a roll to form the disc the grains will be knocked down in such a manner that their sharper points will, as the disc is employed in grinding or polishing the surface, be brought against the surface of the work. However, to insure that the majority of the grits will be so oriented, we have provided methods and apparatus for so orienting the grains which will be described more fully hereinafter.

Figures 2, 3 and 4 illustrate a disc made according to this invention, wherein the disc is composed of a plurality of convolutions 32 of abrasive coated material affording a laminated abrasive structure. The laminations are held together by the adhesive material establishing contact on one convolution with the back surface of the adjacent convolution so that a structure somewhat similar to Figure 4 will be obtained, the innermost convolution 32c having its coating 28 of adhesive material contacting at a plurality of points, indicated at 34—34 with the back surface 29 of the immediately adjacent convolution 32. Thus the abrasive grains indicated at 27 in the layer of adhesive 28 are substantially embedded therein with their major axes and thus their sharper cutting points presented toward the margins of the laminations. In this way a substantially continuous abrading surface indicated at 28 on the surface of the disc is thus provided. It will be understood that care must be exercised that the proper weight of paper with regard to abrasive and adhesive be selected.

The disc-like structure thus provided may be secured to a flexible backing 29 of paper or cloth or other suitable material having an axial opening 30 by which the same may be attached to the rotating shaft of a grinding machine.

It will be understood that the backing 29 should be cemented to the disc by a flexible waterproof adhesive similar to that employed in the disc itself, or, if desired for some purposes, the backing 29 may be of a rigid material and the disc likewise cemented thereto.

In Figure 4, it will be understood, of course, that the thicknesses of the convolutions and layers of grit and adhesive have been greatly exaggerated in size, although it is conceivable that one might produce an abrasive article having convolutions whose thicknesses are as great as those shown in Figure 4. However, in the ordinary form of the invention for employment in standard surface grinding the disc is made up of a sheet not substantially greater in thickness than a sheet of ordinary sandpaper, thus lending to the final product a desired degree of flexibility.

It will be observed that in some instances it may be desirable to provide grooves in the abrading surface 28, these grooves being shown at 31 in Figures 2 and 3. It will also be noted that the grooves 31 are preferably of greater depths at their inner ends toward the axis of the disc than at their outer ends adjacent to the periphery of the disc. These grooves may be formed in the disc after the fabrication of the same inasmuch as forming the grooves in the strip prior to finally winding would require considerable care in aligning the notches in each convolution from which these grooves are formed.

The disc thus formed contains a number of voids which are afforded by virtue of the grit particles themselves holding the laminations apart and by the vacant places indicated at 28e where the glue or other adhesive does not completely fill the spaces between the convolutions. Thus the abrasive article quickly cleans itself as it works and clogging or loading of the article is practically impossible.

We have found that a satisfactory grinding and polishing wheel may be constructed by methods disclosed herein, and in one form of the invention, which is illustrated in Figures 6 and 7, we apply a coating of adhesive material containing an abrasive to both sides of the strip forming the flexible abrasive article. This coating operation may be accomplished by the apparatus shown in Figure 5.

After making a double coated strip, it is then wound loosely into a configuration substantially like that shown in Figures 6 and 7. The thus wound material is then thoroughly cured and dried. After curing, the disc-like structure then afforded is cemented to the cloth backing in such a manner as to preserve the open or spaced convoluted structure as shown. The polishing compound, which may be according to the formula appearing below, is then forced into the spaces between the layers and when completely filled with polish the disc is then aligned to set for sufficient time to solidify the polish base. The drying time, we find to give best results by subjecting the article to a drying temperature for approximately forty-eight hours.

A satisfactory formula which we have em-

[fol. 810]

played for the purpose of compounding the polishing material may be as follows:

	Grams
Nitro base thinned to 50% solids	200
Dibutyl phthalate	4.0
600 silicon carbide	46.0
Tripoli	138.0
Borax	16.0
Ethalin	4.0

From the foregoing it will be observed that we produce a convoluted structure indicated generally at 36, composed of the laminations of the convolutions 31 of suitable fabric coated on both sides as indicated at 33 and 34 with adhesive 35 containing the comminuted abrasive material 36.

It will be noted that sufficient space is afforded between the layers 31 particularly as shown in Figure 7 to permit of the introduction of a comminuted polishing material indicated at 37. Thus the finished article possesses both grinding and polishing properties.

It will be understood that it is highly desirable that the comminuted abrasive material be disposed on the strip or sheet in such manner that the individual grits will have their major axes preferably lying parallel with the surface of the sheet, and, where the sheet is to be wound later to form a disc which marginally exposes an edge of the sheet for forming the abrasive surface, that the grits be perpendicular or substantially perpendicular to the longitudinal margins of the sheet.

While orientation of the grits with their major axes parallel with the surface of the sheet and substantially perpendicular to the edges thereof, may be more or less accomplished in simple gravity deposition of the grits on the adhesive coated sheet, a positive orientation of the individual grains may be accomplished by electrical action, that is to say, the grits may be deposited on the sheet in the presence of an electrical field, for example electrostatic, or if the grit particles are of a magnetically responsive nature then in the presence of an electro-magnetic field. Grits deposited in the presence of such an electrical field will be caused to align themselves with the lines of force of the electro-magnetic or electrostatic field as the case may be.

For most abrasive articles an electrostatic field will perform the function inasmuch as most of the grit particles commonly employed in the abrasive arts are of a non-magnetic character and are non-conductors and practically all will respond to the force of an electrostatic field.

Referring specifically to Figure 5, we provide a suitable backing for carrier strip 63 which receives coats of adhesive material on both sides thereof from a suitable tank 64, the strip being conducted upwardly between two chambers 65 and 66 and then conducted through edge guide rollers 67.

In the chambers 65 and 66 there are provided electrodes 68 and 69 of preferably negative polarity, the sheet being itself of a conductive nature and connected to the positive side of a source of electric motive force indicated at 70.

The apparatus receives grit from hoppers 71 and 72 which is agitated in the form of clouds within the chambers 65 and 66 by air blasts introduced at the nozzles 73 and 74.

The apparatus shown in Figure 5 is similar to that shown in the patent to Simpson 1,336,300, and serves to illustrate one apparatus for carrying out the double coating simultaneously. This form of the apparatus does not, however, produce orientation of the grit particles with their major axes parallel to the plane of the sheet, and reference will be made hereinafter to forms of the invention including apparatus for this purpose.

It will be understood that the sheet may be coated on both sides by running it twice through either a gravity coating apparatus or any of the apparatus shown in the other figures of the drawings.

As herein pointed out, it is desirable to orient the grit particles so that they will lie with their major axes substantially parallel to the surface to be coated, and they will thus present their sharp points at the edges of the strip as the same becomes worn in use as an abrading disc.

This orientation of the particles uniformly on the sheet is also of utility in the manufacture of mineral coated shingles wherein it is desirable that the particles of mineral, granules or the like, be deposited so that a minimum number of the mineral granules is required to cover a given area of the asphaltum sheet or other material from which the carrier or backing of the shingle is made.

We have illustrated herein a number of ways in which this may be accomplished which are all included in the disclosures of Figures 8 to 12, both inclusive, and Figures 14 to 18, both inclusive, it being understood that these electrical orienting devices are to be used in the general apparatus shown in Figures 1 and 1a at the point indicated by the hopper 11.

With reference first to Figures 8 and 9, we have employed a backing 76, of suitable material which receives a coating on the upper surface of the horizontal flight thereof shown in Figure 8, this coating being applied from a set of adhesive distributing or applying rollers 77, 78 and 79, the latter taking up adhesive from a tank 80. This adhesive layer is indicated at 81 and the backing is then propelled to the left as viewed in Figure 8 between electrodes forming an electrostatic field.

These electrodes, we have found, may conveniently comprise a pair of circular disc-like plates 82 and 83, between which the horizontal flight of paper 76 passes at a desired rate of speed. Other forms of the plate electrodes may be employed, but we have found that this type produces a uniform field and highly satisfactory performance.

Above the flight 76, and at a distance sufficiently remote from the electrodes so as to be substantially unaffected thereby, we provide a hopper 84, which may contain abrasive grains of the desired size. We find that for our apparatus an abrasive grain or pulvule of a silvery character that is somewhat elongated, will give highly desirable results as to orientation, though it will be understood that it is not necessary that this type of pulverulent material be employed in order to attain the results of this invention. Practically all of the grits employed in the abrasive industry today are characterized by having a major and a minor axis so that they become responsive to the action of an electrical field when introduced into the presence of the same.

These grits are deposited by gravity from a hopper 84 having a suitable controlling gate 85 over a distributing roller 86 so that they fall in a substantially continuous stream 87 toward the adhesive surface 81, passing between the elec-

trodes 32 and 33 in their path to the adhesive surface.

We have discovered that a static electrical field solely, that is to say, without outside influence, mechanical or otherwise, acting upon the grit particles, tends to deflect them toward one of the plates, and in order to correct this and produce a more uniform distribution and yet obtain orientation, we employ a pole changer, diagrammatically illustrated in Figure 9, through which the two electrodes 32 and 33 are connected to the source of electrical difference of potential.

A source of electromotive force, preferably of relatively high voltage, is provided. The voltage employed in one arrangement of the electrodes was about 105 kilovolts and in employing this voltage the plates or electrodes were spaced about 5.5 inches apart in air. This arrangement served to maintain a constant electrical potential gradient of approximately 19 kilovolts per inch between the electrodes.

In correcting for uneven distribution, the electrical center of the source of difference of potential is grounded as indicated at 84a in Figure 9, and the source composed of two units 85a and 86a is so connected through pole changing switches 87a, 88, 89 and 90 that the relative polarity of the two plates 32 and 33 forming the electrostatic field was changed at a desired frequency.

We have found that, for our purposes, with the plates spaced between 5 and 6 inches apart in air, the best results are obtained by the use of electrical potential gradients of the range of from 17 to 20 k. v. per inch. We also find that where reversal of polarity is resorted to, as in the disclosure in Figure 9, the optimum of frequency of polarity change or reversal should be in the vicinity of two cycles per second. However, we have found that ranges of from one cycle per second to four cycles per second produce satisfactory results and that little change was noted in thereby producing satisfactory distribution and orientation of grit particles on the sheet.

It will be understood that the foregoing disclosure of values as to voltages, rates of polarity change, and size of and distance between the plates is all subject to variation to suit the particular conditions and results to be attained thereby.

We have also found that with different types of abrasive grains different results were obtained. For example, with silicon carbide in some arrangements of the plates compensation had to be made for difficulty encountered due to the high conductivity of silicon carbide, where as with certain other grit particles these difficulties were not found present, such, for example, as in the use of flint.

From the foregoing it will be understood that the electrostatic field established either constantly or intermittently together with reversal of polarity between the plates 32 and 33 affects the grit particles, as they enter the electrical field, to bring them into axial alignment with the lines of force of this field. No appreciable difficulty is found to exist by the presence of the backing material 76 in the field, which would ordinarily be assumed to occur due to the setting up of extraneous electrostatic fields between the two electrodes and the backing itself, this difficulty being eliminated by the form of the electrodes, so that the major value and resultant force of the electrical field is retained.

In the more convenient form of the invention shown in Figure 9, successful results will be obtained by employing disc-like electrodes 32 and 33 of a diameter of about 8 inches, and with the opposed faces of the electrodes substantially parallel to each other.

A further form of apparatus which we may employ for carrying out this method of deposition is illustrated in Figure 10 wherein the strip, sheet or web of Figure 1 is indicated at 33, the one side of said sheet being provided with a layer 34 of adhesive material, preferably waterproof in its characteristics, though, as will be obvious, this layer of adhesive may be of the ordinary blue bond type employed in the sandpaper industry for non-waterproof abrasive articles.

The sheet 33 is caused to travel in a substantially horizontal plane below a hopper 38 and between the electrodes 36 and 37 of an electrical field, the electrodes 36 and 37 being connected to an appropriate source of electrical potential of the required value. In actual practice what are known as high voltages may be required, though it will be understood that the difference of potential to be employed is subject to variation a desired for accomplishing the ultimate desired action.

For the purpose of the present disclosure the electrodes 36 and 37 form part of an electrostatic field, that is to say, a field in which a constant stress is set up but in which relatively small currents flow. Such an electrical field will be established between the electrodes 36 and 37 indicated generally by the lines of force 39. This field is set up between the electrodes 36 and 37 above the sheet 33 and below the hopper 38, and the field strength is regulated to such an extent as to act upon the abrasive particles as they are fed from the hopper 38.

The abrasive particles are shown as a cloud 39 but some of them are shown enlarged at 40 depicting the approximate positions which they assume as they fall by gravity through the electrostatic field. It will be understood that should the electrostatic field be of great enough strength, the particles issuing from the right hand end as shown in Figure 10, would be cause to orient themselves with their major axes parallel with the lines of force of the electrostatic field and be projected by that field from one of the electrodes toward the other thereof. Therefore, by regulating the electrostatic field to the desired optimum the particles will be caused merely to flatten out, and while they may, under these circumstances be caused to travel along the lines of force of the field, the force of gravity will tend to overcome their flight toward the oppositely charged electrode and they will fall upon the layer of adhesive, assuming positions substantially as shown in Figure 10, and indicated at 41. This orientation is more uniformly accomplished, however, in the form of the apparatus shown in Figures 8 and 9.

Inasmuch as the particles of abrasive material as they leave the hopper adjacent to the electrode 36, may in a large number of instances never reach the sheet, due to their attraction to the other electrode, we provide a movable partition 42 in the hopper, which may be adjusted transversely of the longitudinal axis of the sheet so that the length of the slot in the bottom of the hopper may be varied to cause the grit particles to issue through only a portion of said slot. A suitable handle properly insulated indicated at 43 may be employed for reciprocating the par-

tition 42 and for adjusting same to the desired position.

In some instances the particles of grit will take on charges which may tend to cause them to induce a charge in the sheet and thus the particles would land on the sheet substantially perpendicular to the plane of said sheet. In order to avoid this as much as possible and to counteract a tendency for the particles to assume positions perpendicular to the sheet, the electrodes 36 and 37 may be supplemented by auxiliary electrodes 44 and 45 which may have a voltage regulated (by means not shown) to exert a sufficient electrostatic field effect or action to prevent the particles from taking undesirable positions just as they strike the glue. If desired, this auxiliary field whose lines of force are indicated at 46, may be extended a desired distance beyond the point of actual deposition so that it will function for a period of time after the sheet has moved beyond the effect of the major electrostatic field.

Inasmuch as the poles or electrodes 36 and 44 and 37 and 45 are of like signs, there will be no tendency to set up extraneous electrostatic fields between these electrodes other than substantially ineffective electrostatic or electro-magnetic fields, as the case may be, due to difference in actual potential of the two fields 36 and 46. In any event, inasmuch as the electrostatic fields employed have their lines of force substantially parallel, the effect of any extraneous field set up between the electrodes 36 and 44 and 37 and 45 should be substantially negligible in disturbing the desired deposition and orientation of the particles on the sheet.

An illustration of one arrangement of the electrodes which will set up the desired electrical action is shown in Figure 11 in perspective. Of course in some instances it may be desired to [illegible]inate the secondary electrostatic field 46 and [illegible] proper control of the moving partition 42 the [illegible]ed results may be attained as to ultimate effect of the field on the grit particles.

Figure 11 serves to illustrate a further modified form of the hopper. In this form the hopper is of a general V-shape cross section and the bottom thereof being open is provided with a tapering slot indicated at 47. The slot is of greater dimensions at one end than at the other end so that by proper positioning of the hopper the particles of abrasive acted upon by one of the electrodes and tending to be projected toward the other thereof would be counteracted by the tapering slot in the hopper, thus preventing piling up of the abrasive grit at one margin of the sheet.

It will also be understood that by regulating the height of the hopper 48a from the sheet that different effects may be obtained to the point where the desired orientation and deposition of the grit is attained.

The electrodes 44 and 45 may be employed in Figure 11 as in Figure 10 if that be found necessary under the circumstances.

Referring now to Figure 12, the apparatus here shown discloses a hopper 58 into which the comminuted abrasive material and an adhesive material in plastic form are introduced. The hopper may be suitably heated to maintain the adhesive material in a liquid state so that it will flow from a suitable opening 59 provided in the bottom of the hopper.

As the incorporated grit and adhesive material flow from the hopper on to the sheet 33, the mass is subjected to the force of an electrostatic field 62 set up between the electrodes 60 and 61 thus orienting the particles of grit contained in the adhesive according to their electrical responsiveness to such a field, that is to say, the grits having major and minor axes, as hereinbefore pointed out, will under the influence of the electrostatic field become aligned with the lines of force 63 shown in Figure 12, while in the glue or other adhesive and thus be carried by the glue or adhesive on to the sheet where they will be deposited with their major axes substantially parallel with the plane of the sheet and substantially perpendicular to the margins thereof.

Figure 13 shows the sheet made according to the methods herein described and it will be observed that in many instances a plurality of layers of grit may be provided and for this reason a sheet such as that shown in Figure 13 is illustrated having two or more layers 41a of grit material and adhesive material deposited thereon.

In order to make clear to those skilled in the art the basic principles involved in employing the electrostatic field for the purposes of the present invention, Figures 14 to 18 have been incorporated in this disclosure showing the various steps in development to obtain the optimum of results in deposition, distribution and orientation of the abrasive particles.

It will be understood that these Figures 14 to 18 all illustrate methods for producing deposition, distribution and orientation, but that some produce better results than others as will appear from the following description.

On reference to Figure 14, a pair of electrodes, preferably in the form of circular discs 92 and 93 are employed, one of these discs being connected to the positive side, such as at 94, of a source of difference of electrical potential and the other disc being connected to the negative side or ground as the case may be.

A relatively high difference of electrical potential was thus impressed on the two plates establishing an electrostatic field between them, into which abrasive particles 96 were introduced, either by gravity as shown in Figure 14, or by any other suitable means, so as to produce a stream of the particles as they enter the electrostatic field established between the plates 92 and 93.

This pair of substantially circular metal plates are made about 8 inches in diameter and provided with curved edges indicated at 97 and 98, thus preventing excessive concentration of the field at the edges of the plates thereby reducing the possibility of sparking between the plates.

These electrode plates were spaced about 5.5 inches apart in air and were connected to a source of electromotive force approximately 105 kilovolts, so that a substantially constant electrical potential range of about 19 kilovolts per inch was maintained between them.

The mineral pulverized material (in one instance grade 80 silicon carbide) was deposited so as to fall in a stream between the two plates 92 and 93.

When either of the plates is grounded, the mineral stream which was originally at ground potential is deflected toward the ungrounded plate, so that if an adhesively coated strip was introduced between the plates 92 and 93, while orientation of the particles transversely of the strip

was attained, yet deposit of mineral would take place in spaces at one edge over that at another edge of the strip.

To overcome this uneven distribution of particles, the plates may be connected to the source of potential through a reversing switch or pole changer which alternately serves to connect each plate to ground and to high potential, in other words, supply an alternating voltage to said plates.

One manner of accomplishing this is disclosed in Figure 15, in which the plates 93a and 96a are connected through a pole changing apparatus 99a to a source of relatively high electrical potential, 97a.

The stream of mineral at low frequencies of reversal of polarity moved from one plate to the other following the reversals of polarity of electrical potential so that over a given period of time (say one electrical cycle) the air space between the electrodes 93a and 96a was substantially uniformly filled with mineral particles.

The source of electrical energy 97a is so arranged in this circuit that one side 96a thereof is connected to ground.

In the case of Figure 16, the plates 93b and 96b are so arranged in the circuit that one of them is connected to one of the sources of difference of potential indicated at 97b and the other to the other source indicated at 98b, the electrical centre of the sources indicated at Figure 16 being grounded as at 100. In this arrangement the main mineral stream becomes divided into two separate streams each of which tended to flow toward one of the plates thereby leaving a low mineral concentration in the space midway between the plates.

From the foregoing Figures 14, 15 and 16 it will be observed that we are enabled by adjustments and variations in the intensity of the electrical field and by its polarity and/or periodicity of change and by other adjustments, to regulate what will happen to the mineral grits as they are introduced into the electrical field. Thus where it is desirable that the grits be more heavily deposited at one portion of the adhesive coating backing than at another portion this can be regulated to a desired degree as required.

Should it be desired to prevent excess deposition of the grit in predetermined areas, then the form of the invention shown in Figure 2 and hereinabove described may be employed. For the purpose of manufacturing abrasive discs as disclosed herein this form of the invention finds utility.

In Figures 17 and 17a, a further alternative arrangement of the electrode plates is disclosed. Figure 17 being a view looking down on the plates, the backing element being indicated at 101 and the plates at 93c and 96c. Figure 17a is a view looking inwardly in the direction indicated by the arrow A.

In Figures 17 and 17a we disclose the electrodes arranged in convergent planes so that some portions of the surfaces of the discs were closer together than other portions, the purpose being to further allow for adjustment in distribution of the grit particles.

The grit particles entering this electrostatic field are subjected to a variation in potential gradient from 17 k. v. per inch to 34 k. v. per inch, or any other variation of the electrical potential gradient, depending upon the voltages employed, size of plates, etc.

The stream of mineral is allowed to fall into the zone whose gradient is about 19 k. v. per inch. There is in such circumstances apparently no tendency for the mineral particles to migrate toward the zone of high gradient, and the general dispersion and orientation of the particles is not materially interfered with and not materially different from that where the plates are substantially parallel, and the potential gradient therefore substantially uniform.

Successful results may be obtained with any of the foregoing arrangements, by the employment of an abrasive grit of a grade 1½ flint, preferably of a splintery nature.

We find that a higher electrical potential gradient may be maintained without disruptive discharge or so-called spark-over with flint, for example, than with other grits such as silicon carbide, inasmuch as in the same air space potential gradient and with the same relative quantity of grit introduced therebetween, the conductivity of silicon carbide, being higher than that of flint, tends to produce an increased tendency to spark-over or brush discharge, as it is sometimes termed, and care must in some cases be exercised to prevent the formation of a conducting path between the plates.

A method of overcoming this difficulty for certain purposes is shown in Figures 18 and 18a, wherein the two plates 93d and 96d were arranged on opposite sides of insulating plates 102 and 103.

While the employment of these plates finds value with certain minerals, there is no marked difference in the action of the electrostatic field with other minerals, and we have found this arrangement of Figures 18 and 18a to be of value in increasing the activity of flint, but of much less perceptible value in increasing the activity of silicon carbide, inasmuch as spark-over or brush discharge sometimes occurs which causes the greater part of the applied voltage to be built up across the insulation.

The observed motion of the particles was substantially the same with or without the insulation, but, as pointed out in the case of some abrasive particles, an increased activity without a resultant brush discharge was observed. The plates also serve as a means to mechanically confine the activity of the particles to the area within the plates.

Referring now more particularly to the form of the invention shown in Figure 19, it will be observed that here may be provided a form of the apparatus wherein the electrode plates are alternately connected to ground. In this form of the invention the plates indicated at 104 and 105 are connected by conductors 106 and 107 to the negative and positive sides, respectively, of sources of electrical difference of potential 108 and 109, that is, sources of potential being connected in series as shown.

A grounding switch is provided indicated generally at 110 and has its terminals 111 and 112 thereof connected to ground as indicated at 113, switching members 114 and 115 serving to alternately connect the conductors 106 and 107 with ground.

It will be seen from the form of the invention disclosed in Figure 19 that by the alternative grounding of the plates 104 and 105, the orienting force exerted on the particle is uniformly maintained by virtue of the maintenance of a constant gradient between the plates. Dispersion of the particles thus uniformly obtained by the use of the switching arrangement prevents the bulk

[fol. 814]

of the particles (which, it will be understood, are at ground potential when they pass into the zone of the plates) from being directed more to one plate than to the other.

The form of the invention shown in Figure 15 operates similarly to the form of the invention shown in Figure 9.

Reverting to the form of the invention disclosed in Figures 8 and 9, the structure there employed including a reversal of polarity does not include the insulating plates and these, under ordinary circumstances, are not required.

Under conditions shown in Figure 14 and without the use of insulation on the plates or between them, flint particles dropped into the field whose gradient was 15 k. v. per inch were fairly well oriented on the sheet but the distribution is not entirely uniform.

An increase in gradient from 15 to 17.5 k. v. per inch resulted in the production of a marked increase in the degree of orientation, but as well increased the inequality of distribution.

With abrasive grains of silicon carbide a limitation of the potential gradient was required so as to prevent dielectric breakdown.

The use of insulation on the plates serves to cause the mineral to be more evenly distributed, but it will be understood that some slight amount of orientation must be sacrificed owing to the slight reduction in the potential gradient caused by the employment of the insulating plates.

From the foregoing it will be observed that by adjustment of the electrostatic field value and/or adjustment of the plates with respect to the air space between them and/or their angularity with respect to each other, and/or the periodicity of polarity reversal, we are enabled to produce desired effects in the orientation and distribution of the grit particles on the sheet.

Where the particles are deposited on shingle material for the purpose of roofing shingles and the like, it will be observed that by causing them to lie flat on the adhesively coated sheets, such as an asphaltum adhesive sheet or the like, the employment of a lesser number of particles to cover a given area of the shingles is required.

Having thus described our invention and illustrated its use, what we claim as new and desire to secure by Letters Patent is:

1. The process of coating an adhesively coated backing material with elongated particles with their longer axes substantially in parallelism to the backing which includes as steps thereof feeding a carrier or backing and applying an adhesive layer to a suitable surface thereof, and depositing on said adhesive layer a pulverulent abrasive grit of elongated nature in respect to their major axes under the influence of an alternating electrical field whose lines of force at and adjacent said carrier have an orienting effect on the particles to position them substantially parallel said surface thereof.

2. Apparatus for coating adhesive backing material with elongated particles with their longer axes substantially in parallelism to the backing surface including spaced electrodes adapted to be connected to a source of uni-directional electrical difference of potential, means for supplying abrasive particles or the like to the vicinity of said electrodes, a pole changer interposed in the circuit of said electrodes, and means for guiding an adhesive coated backing adjacent said electrodes for positioning the backing otherwise with respect to said electrodes.

3. Apparatus for coating adhesive backing material with elongated particles with their longer axes substantially in parallelism to the backing surface comprising, in combination, spaced electrodes adapted to be connected to a source of alternating electrical difference of potential, means for feeding an adhesive coated backing element between said electrodes to guide the backing within the field between said electrodes and to direct the backing substantially edgewise with respect to the electrodes and means for delivering abrasive particles in a stream toward said backing and between said electrodes.

4. Apparatus of the character described, in combination, spaced electrodes adapted to be connected to a source of electrical difference of potential, means for feeding an adhesive coated backing element between said electrodes to guide the backing substantially edgewise in respect of said electrodes, means for delivering abrasive particles in a stream toward said backing and between the said electrodes, and means for alternately grounding said electrodes.

5. The process of coating which includes as steps thereof feeding a carrier or backing and applying an adhesive layer to a suitable surface thereof, and depositing on said adhesive layer roofing granules having elongated dimensions under the influence of an alternating electrical field whose lines of force at and adjacent to said carrier have an orienting effect on the granules to position them substantially parallel to said surface thereof.

6. The process of coating which includes as steps thereof feeding a carrier or backing and applying an adhesive layer to a suitable surface thereof, and depositing on said adhesive layer particles of finely divided material having unequal axes under the influence of an alternating electrical field whose lines of force at and adjacent to said carrier have an orienting effect on the particles to position them substantially parallel to said surface thereof.

7. In the process of depositing particles of finely divided material of elongated nature in respect of their major axes upon a surface with their longer axes substantially in parallelism to the surface wherein said particles are subjected to the influence of an electrical field during their deposition, the step which includes reversing the polarity of said field intermittently during the deposition so as to prevent the stream of particles from being thrown out of the desired zone of deposition by the action of said field.

8. Apparatus for coating adhesive backing material with elongated particles with their longer axes substantially in parallelism to the backing surface comprising, in combination, spaced electrodes adapted to be connected to a source of alternating electrical difference of potential, said electrodes being covered with an insulating material minimizing the formation of a conducting path between the electrodes, thereby localizing and minimizing spark-over tendencies, means for feeding an adhesive coated backing element between said electrodes to guide the backing substantially edgewise in respect to said electrodes and means for delivering abrasive particles in a stream toward said backing and between said electrodes.

RICHARD PAUL CARLTON.
THEODORE JOSEPH MILLER.

[fol. 815]

May 22, 1945. R. P. CARLTON 2,376,343

MANUFACTURE OF ABRASIVES

Filed July 28, 1942 3 Sheets-Sheet 1

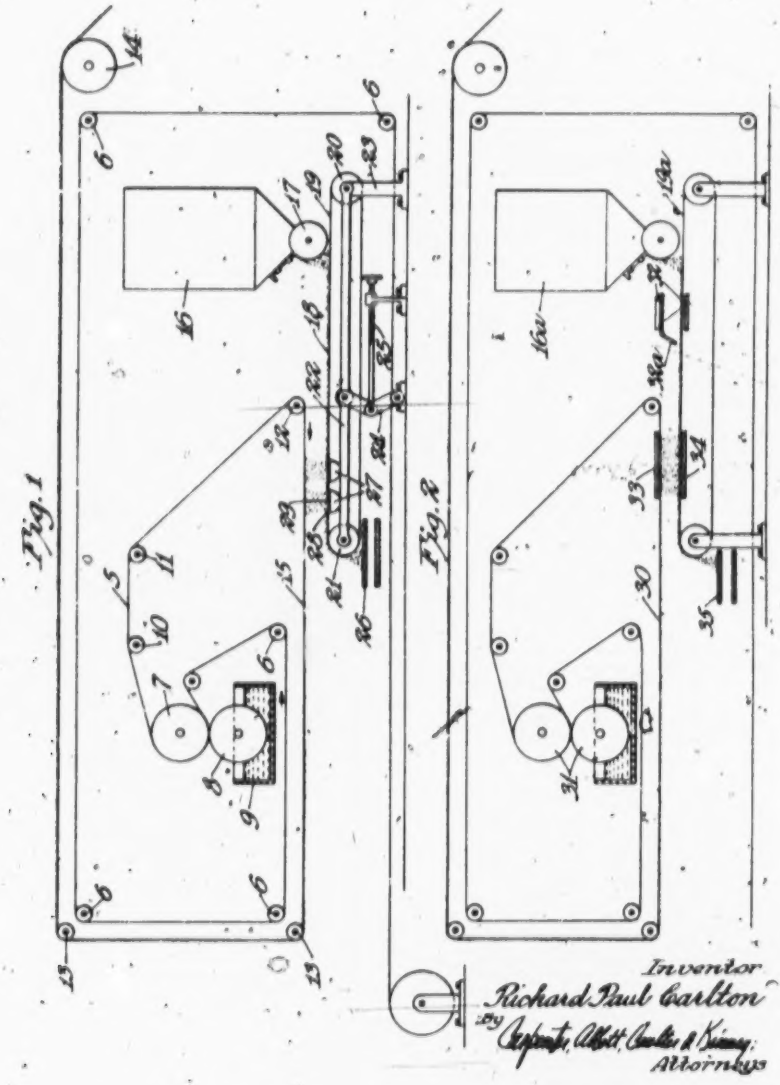

Inventor
Richard Paul Carlton
By Carpenter, Abbott, Coulter & Kinney
Attorneys

[fol. 816]

May 22, 1945. R. P. CARLTON 2,376,343

MANUFACTURE OF ABRASIVES

Filed July 28, 1942 3 Sheets-Sheet 2

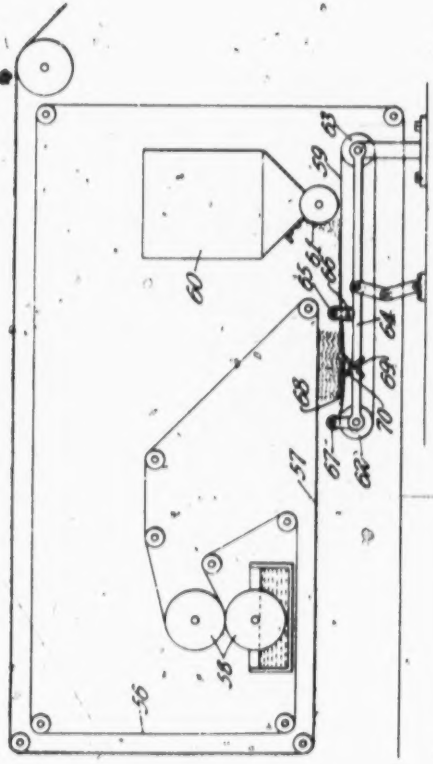

Inventor
Richard Paul Carlton
By Carpenter, Abbott, Coulter & Kinney
Attorneys

May 22, 1945. R. P. CARLTON 2,376,343

MANUFACTURE OF ABRASIVES

Filed July 28, 1942 3 Sheets-Sheet 3

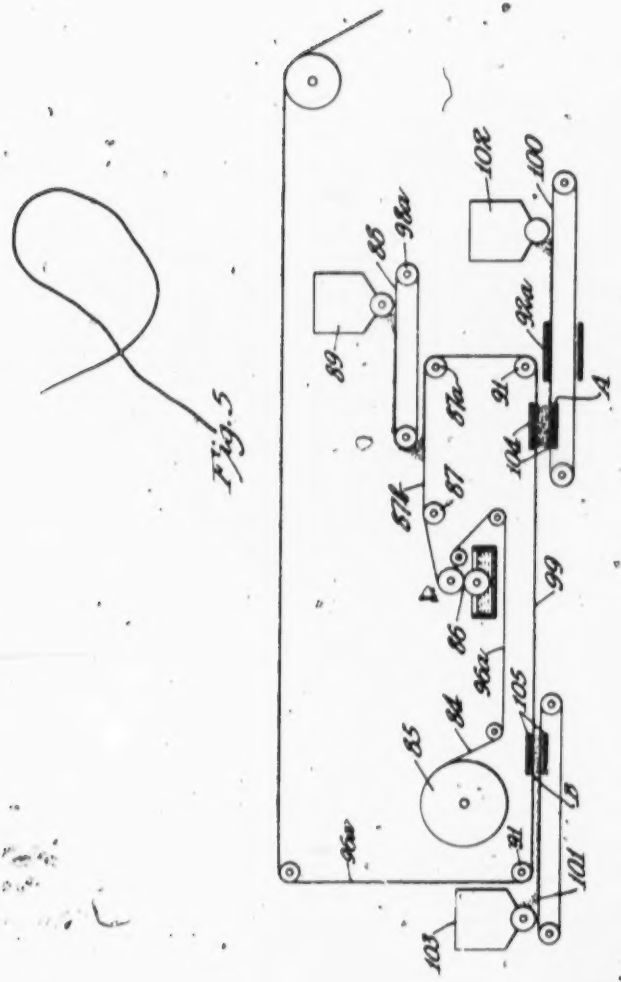

Inventor
Richard Paul Carlton
By Carpenter, Abbott, Carlton & Emery,
Attorneys

[fol. 818]

Patented May 22, 1945

2,376,343

UNITED STATES PATENT OFFICE

2,376,343

MANUFACTURE OF ABRASIVES

Richard Paul Carlton, St. Paul, Minn., assignor to Minnesota Mining & Manufacturing Company, St. Paul, Minn., a corporation of Delaware

Application July 26, 1942, Serial No. 452,623

6 Claims. (Cl. 117—17)

This invention relates in general to coated articles and to the art of coating, and more particularly to an improved method of and apparatus for applying pulverulent coatings to suitably adhesively coated surfaces, and while the invention finds particular utility in the art of making flexible abrasives, and is, therefore, described and illustrated for this purpose, it finds a wide field of utility for analogous purposes.

This application is a continuation of my copending application, Serial No. 433,065, filed January 30, 1930, now Patent No. 2,318,570, granted May 4, 1943.

It is well known that in the art of making sandpaper, emery paper or cloth and similar abrasive articles, a flexible or in some cases, a rigid, backing of paper, cloth, wood or the like is employed, to which is applied a coating of an adhesive substance, such as animal or vegetable glue, or where a waterproof article is desired, the backing may be coated with any of the now well known waterproof adhesives of the Ohio Patents 1,565,027, 1,565,028, of December 8, 1925, or 1,581,027 of April 20, 1926, for this purpose, and while the coating is still wet or unset, a suitable abrasive material such as garnet, corundum, sand or the like is applied thereto. The grains of abrasive substances are usually applied by gravity upon the upper adhesive coated surface of the backing, and they lie in the adhesive material in haphazard fashion due to the elongated nature of the abrasive particles, and in a large degree, the facets or cutting edges of the individual grains or grits often lie flat upon or are embedded in the adhesive coating in such a manner that in some instances their best cutting edges never come into contact with the work or at best are brought inefficiently into contact therewith. The invention here has as one of its objects to measurably increase the number of grits whose longer or greater dimensions are in a plane perpendicular to the surface of the backing, thereby to present more efficiently the cutting edges to the work, and increase the cutting ability and life of the abrasive article.

It will be understood that in ordinarily depositing mineral, that is, pulverulent abrasive material solely under the force of gravity onto a backing, it acquires a velocity due to the action of gravity. As the grits pass through the intervening air space, there will be caused some change in their positions en route to the sheet or backing, but ordinarily neither the velocity given to the grits nor the effect of the air on them is sufficient to cause them to become aligned so as to assume positions substantially perpendicular to the backing. It is, therefore, necessary that independent force be applied to the grits, and I have found that by passing the grits through a static field of electric energy or of electro-magnetic energy or by mechanically imparting this force to the grits a much greater number of the individual particles will assume erect positions on the backing, which will enhance its cutting ability. As will later appear, my invention, in its several forms, is capable of application for operation in conjunction with gravity methods of applying the grit, inasmuch as under certain conditions, and for some purposes, it is desirable to employ both gravity and one of the forms of my invention in conjunction in order to attain a desired form of abrasive article.

In carrying out this invention, I find it desirable to employ a conveyor for conducting the mineral at rest relative to the conveyor by relatively slow speed to a point adjacent to which the independent force is applied for projecting the particles of grit onto the backing. I find that by then applying this independent force, be it mechanical or electrostatic or electro-magnetic, I am able to impart a high velocity to the particle so that any force of gravity acting on the particle, whether in the same direction, in a counter direction, or in a direction angularly to that at which the force is applied, will be relatively small compared to this force applied. It is possible with the present invention to apply the force directly counter to gravity, that is, by bringing the grits beneath the backing or by applying the force in some other direction as long as the force of gravity and the effect of air is reduced below a point which will interfere with the result desired, namely, the projection of the grits with their longitudinal dimensions ultimately perpendicular or substantially so with respect to the backing.

The principal objects and advantages of this invention reside in the provision of an improved abrasive coated article, such, for example, as sandpaper, emery cloth, or the like, wherein the abrasive grits or grains lie in position on the backing for increasing the cutting effect and durability of the abrasive article; the provision of an improved abrasive article wherein the abrasive grits are disposed so that their cutting facets are presented in position to more efficiently engage the work and thereby produce a sharper article; the provision of an improved abrasive article wherein the abrasive grains or grits are applied thereto with their longer or greater dimension substantially perpendicular to the plane of the

[fol. 819]

backing; the provision of an improved abrasive article which may be flexible or rigid, as desired, and which may or may not be made waterproof, that is, suitable for employment in a water abrading operation.

This invention further includes as objects and advantages thereof, the provision of an improved method of and apparatus for manufacturing abrasive articles; the provision of an improved method of and apparatus for applying pulverulent material to one surface of a backing irrespective of the force of gravity, that is, against the normal tendency of the force of gravity; the provision of an improved method of and apparatus for propelling a pulverulent material, such as a grit or an abrasive grain, against an adhesive coated surface; the provision of an improved method of and apparatus for the purpose set forth and including electrically operated means for acting on an abrasive grain or pulverulent material and causing it to advance onto the adhesive coated backing irrespective of the force of gravity; the provision of an improved method of and apparatus for causing the particles of pulverulent material to impinge upon and assume a position in the adhesive coated surface substantially normal or perpendicular to the surface of the backing; the provision of an improved method of and apparatus for propelling a pulverulent material onto a moving sheet in a direction transversely to the plane of movement thereof and in a direction substantially counter to gravity; the provision of an improved method of and apparatus for making abrasive articles, such as sandpaper and the like, which includes the application of a grit to the under side of the backing; the provision of an improved apparatus which includes means for feeding and applying a pulverulent material counter to the force of gravity and simultaneously with movement of the backing; the provision of an improved means for moving a web of paper and applying an adhesive thereto and including means arranged below and for operating synchronously with for applying a pulverulent material to the under side of said moving backing; and the provision of an apparatus of the character described wherein improved electrostatic or electro-magnetic means may be employed, acting on the abrasive material and causing it to move at an accelerated speed toward the sheet so as to cause it to impinge thereon in the adhesive coating and thereby present the cutting edges of the abrasive grits away from the surface of the backing and thus increase the cutting ability and life of the abrasive article.

I have also found my invention useful as a modifying step in the employment of the conventional gravity process for applying grit in the manufacture of sandpaper or other abrasive and, therefore, additional objects of this invention reside in the provision of an improved method of interposing an additional step which will apply abrasive grains either before or after the application of grits by gravity in the usual manner, it being understood that the step of applying grit irrespective of gravity by an electro-magnetic or electrostatic means may be employed somewhere in the process of manufacture, the essential purpose being to increase the number of grits whose cutting facets are presented away from the backing and thereby to enhance the cutting ability of the finished article.

The apparatus of this invention includes a number of alternative forms for mechanically or electrically carrying out the steps of the process, and to this end is provided an improved pneum means and improved vibrator structure for chanically propelling the pulverulent mat and improved electro-magnetic structure for ing on the mineral and causing it to move cloud toward the adhesive coated surface o moving web or backing.

The foregoing and such other objects and vantages as may appear or be pointed out as description proceeds are attained in the st tures illustrated in the accompanying drawin which:

Figure 1 is a schematic view illustrating form of apparatus for carrying out the proce this invention;

Figure 2 is a view similar to Figure 1 of an a native form of the invention;

Figure 3 is a further alternative form of apparatus of this invention of employing chanical vibrating means;

Figure 4 is an enlarged schematic view i trating a portion of an abrasive article mad accordance with this invention;

Figure 5 is an additional form of apparatu carrying out further steps of the process of invention.

The method of the present invention incl as steps thereof the feeding of a web or stri paper or other fabric at a predetermined ra speed, applying an adhesive substance to under side of the sheet, or applying the adhe coating to one side and then moving the s with the coated side out, and simultaneously the movement of the coated sheet, causing a or abrasive material to be applied to this The sheet or web of paper may be moved so the adhesive coated side is either presented do wardly or at any angle thereto. The moveme of the abrasive grains onto the under side of backing is done irrespective of the force of gra and, in fact, directly counter to gravity, and p erably done by imparting relatively high velo to the abrasive material, thus causing it to pinge upon the adhesive coating. In view of fact that the abrasive grains are proje through an intervening space from a suit carrier onto the adhesive coated side irrespec of or counter to the force of gravity, the gra which are usually somewhat elongated, will sume a position in transit so that the longer mension thereof will take a position norma the surface of the backing, thus causing grains to "stand" on the surface rather than flat in greater percentage than when they deposited by gravity. It is to be understood this movement of the grains and deposition them on the coated surface may be carried ou a number of ways, either by vibration, by an blast, or by electrostatic or electro-magn means.

In the alternative forms of this invention i to be described, the method involved inclu combining a gravity deposition of mineral on adhesively coated moving backing with the of applying the grits irrespective of gravity, being particularly useful in some of the hea grits wherein it may be found that the fo susceptible of application by an electrostatic an electro-magnetic means is not sufficiently tive on the available area of the individual g to cause an entirely satisfactory result or to m enough of the grits onto the sheet to attain desired end. In this invention it may be requi to apply some of the grit by gravity and s apply some of the grit by one of the method

this invention or vice versa, but, in any event, the number of grits in the entire finished article which stand erect on the backing will be measurably increased over the ordinary methods heretofore employed for depositing grit on a backing for forming an abrasive article.

This invention produces a very satisfactory piece of sandpaper in which the cutting ability is measurably increased and by the deposition of the grains of sand or grit irrespective of the force of gravity, it is possible to produce an orientation of the mineral as desired and to control the thickness of the abrasive coating much more readily than where gravity alone is relied upon or employed for depositing the grains on the sheet.

Referring now more particularly to Figure 1, the flexible backing 5 of paper or cloth or other fabric is trained or fed over a series of rollers 6, 6, and over one of a pair of the squeeze rollers, indicated at 7, the other roller 8 of said pair being in contact with an adhesive material contained in a tray or tank 9 by which an adhesive coating is applied to one side of the moving web. After receiving the adhesive coating, the web 5 is trained over rollers 10 and 11 and is brought back over a roller 12 so that the adhesive coated surface of said web is presented downwardly. The web may then be trained over rollers 13, 14, and fed to a suction drum 15, whence it passes into festoons for drying.

The mineral is supplied from a hopper 16 and a conventional outlet 17 which feeds a layer 18 of mineral to a moving conveyor 19. This conveyor 19 is preferably porous and passes over the feeding rollers 20 and 21 and is adapted to move at a suitable rate of speed to supply a sufficient quantity of abrasive grain. In some cases, it has been found advantageous to move the conveyor at a speed substantially the same rate of speed as the web 5, although these speeds are, of course, variables. The rollers 20 and 21 are mounted in the ends of a suitable frame 22, and this frame may be raised and lowered so as to vary the distance between mineral conveyor 19 and the moving web 5. This frame 22 may be supported fixedly at one end, as indicated at 23, and the other end may be raised and lowered by a toggle arrangement 24 activated by a threaded rod 25. Below the conveyor 19 and at the movable end thereof, that is, adjacent to the web 5, there is provided a second conveyor 26 which serves to conduct away excess mineral which flows over the end of the conveyor 19 and which may be returned in any suitable manner to the mineral hopper.

Below the upper flight of the conveyor 19, there are provided two air troughs 27. These air troughs are provided with flat upper walls 28, having slots 29 therein, said slots extending across the width of conveyor 19 and the troughs themselves being connected to a suitable source of air under pressure.

These troughs form in effect elongated jets or nozzles and when so placed below the conveyor belt or frame 22, a small quantity of air is emitted at high velocity which passes through the porous belt or conveyor.

It will be understood that when a blast or blasts of air are delivered from the troughs 27, this blast of air passes through the porous conveyor 19 and blows the mineral from the conveyor against the uniler side of the flight 18 so that the mineral is caused to strike into the adhesive at a relatively high velocity and becomes impinged therein. Owing to the projecting of the mineral in this manner through the intervening air space, the individual particles of grit or abrasive material are caused to assume a position parallel to their trajectory, that is, with their longer dimension perpendicular to the surface of the flight 18. In view of the fact that most of the particles of mineral are somewhat elongated, due to the manner of production of the same, they will naturally assume this position in movement from the conveyor 19 to the adhesive coated surface of the backing. As they arrive at the adhesive material, they impinge themselves thereon and will thus stand erect in the adhesive, thus forming a sharper contour for abrasive purposes. By varying the rate of speed of the moving backing relatively to the speed of the conveyor and by varying the distance between the conveyor and the backing and the velocity of the air stream, and by increasing or reducing the number of such jets and the quantity of adhesive applied, any reasonable desired thickness of grit layer may be produced during the process and without stopping the apparatus. It will be understood that the excess mineral carried by the conveyor may be dumped into the conveyor 26 and returned by any suitable means to the hopper 16.

Referring now to Figure 3, there is provided the same general arrangement of moving backing, having the flight 30 adhesively coated from the squeeze rollers 31.

Below the flight 30 there is provided a mineral feeding conveyor 19a, receiving pulverulent material from the hopper 16a.

The conveyor 19a is mounted for movement toward and away from the flight 30 similar to the conveyor 19 and, therefore, this structure has not been shown in Figure 3.

As the mineral flows from the hopper 16A it does not always assume a smooth or even distribution on the conveyor 19A, and, therefore, it may be desirable to provide a pair of charged electrodes 32, one arranged above and one below the conveyor 19A, for the purpose of spreading the mineral evenly on the conveyor belt. The conveyor 19A in this instance may be non-porous.

When charged electrodes are put in this position they act in principle the same as the charged electrodes used for coating the mineral on the backing. An electrical charge or difference of potential is set up between the electrodes 32. The voltage or difference in potential between these electrodes is maintained great enough to produce a strong static field, but not so great as to break down the insulation between the plates, which insulation may be the dielectric strength of the air or the dielectric strength of the air plus the dielectric strength of any insulating material which may be used to wrap the electrodes.

As the mineral on the conveyor enters the static field between the plates the mineral particles take on the charge of the lower plate, and are repelled to the upper plate where they lose their charge and take on the opposite charge of the upper plate. At this point they are repelled to the lower plate. Since new mineral is being conveyed by the conveyor into the field continuously the static fields soon become supersaturated with mineral particles, and an equilibrium is reached where as many particles are thrown out of the static field as are brought in by the conveyor. By having a down-turned end 32A of the upper electrode the mineral particles that are thrown out of the static field are deflected evenly on the conveyor belt so that a smooth

coating of abrasive grit is first placed on the conveyor.

The use of a static field for getting a smooth coating of mineral on the conveyor belt is not necessary to the invention but is an additional means of obtaining evenly distributed abrasive coatings, and is also a means for avoiding the use of any excess mineral on the conveyor. When the mineral is evenly coated on the conveyor at the time it is being coated, streaks, thin spots, etc., in the finished product are reduced.

At the same approximate point at which troughs 27 are provided in Figure 1 there are here provided electrically charged electrodes 33 and 34, the electrode 34 being located below the upper flight of the conveyor belt 18A and electrode 33 being disposed above the flight 20 of the backing. A sufficient difference of potential is maintained at electrodes 33 and 34 to produce a strong static field, similarly to that referred to above. This static field moves the mineral from the belt 18A to the underside, which is the adhesive coated surface of the flight 20.

As the mineral enters the static field between the electrodes 33 and 34 it becomes charged with the charge of the lower plate, and is here propelled to the upper plate 33.

It will be observed that in this method of coating the mineral is applied by a force other than gravity. In all other methods of coating sandpaper, known to me, the velocity of the particle is either in whole or part given to it by the force of gravity. In the case of this electrostatic coating the particles are oriented in the static field so that there is a tendency for the long dimension of the mineral to be perpendicular to the electrode plates, and also perpendicular to the web 20, which is being coated. The finished sandpaper product, therefore, contains a substantial percentage of the particles of mineral standing on end rather than laying flat, thereby increasing the cutting properties of the abrasive article.

Excess mineral is dumped onto the conveyor 35, whence it may be returned to the hopper 16a.

Referring now to the form of the invention shown in Figure 3, the moving web 20 is trained over a series of rollers similar to the arrangement shown in Figures 1 and 2 so that a horizontal flight 37 of the paper backing is provided, having an adhesive coating on the under side thereof. Squeeze rollers 36 engage the paper backing for applying an adhesive thereto.

In this form of the invention, a mechanical vibrating means is provided which serves to propel the mineral, that is, the grit, from the grit-feeding conveyor 38, which latter receives mineral from the hopper 39, having a gate 41. The conveyor 38 is trained over rollers 42 and 43 mounted in a suitable frame 44, which latter may be mounted for adjustment toward and away from the flight 37 similarly to the conveyor 18 of Figure 1. The conveyor 38 extends below and is separated from the flight 37 of the paper web and travels at substantially the same speed as the paper web.

The conveyor 38 passes between sets of pinch rollers, one above and one below the upper flight of the conveyor 38 as indicated by 45 and 46, and also beneath a pinch roller 47 which bears on the roller 43. The pinch rollers 45 and 46 tend to distribute the mineral evenly over the surface of the conveyor and are so spaced from the rollers 42 and 47 that the portion of the belt 38 between the rollers 45 and 46, and 43 and 47 is permitted to lie slack, whereas the remaining part of the conveyor is substantially taut. This arrangement tends to limit the vibration of the conveyor belt to the zone of application of the mineral to the paper backing, as indicated at 38.

Beneath the portion 38 of the belt 38, there is provided a revolving batter 48 operating on a shaft carried in suitable bearings in the frame 44 and provided with a plurality of radial arms 51 which upon rotation rigidly strike the under side of the portion 38 of the belt, thus throwing or projecting the mineral content thereof against the under side of the adhesive coated paper backing much in the manner in which the air stream blows the mineral or grit against the paper backing as shown in Figure 1. The batter 48 may be driven in any desired manner from a separate source of power or may be connected suitably with the rollers driving the belt 38, but geared to operate at a greater rate of speed. The rollers 45 and 46 and the roller 47 are separately driven from the belt 38 so as to produce the tautness in the belt, except the flight of the belt indicated at 38.

In Figure 4, there is illustrated an article made in accordance with the present invention. The backing is shown at 20 to which an adhesive coating 21 has been applied, and the grits, greatly enlarged, are indicated at 22, and it is noted that they stand on end in the adhesive coating, thus causing their sharper edges to project beyond the upper or outer surface of the coating, thereby enhancing the cutting ability and increasing the life of the abrasive article. While the article shown in Figure 4 is purely schematic, it will be understood that the mineral actually does take a position substantially normal to the backing and, while all of the grits may not take this position, a large number of the same do, and the cutting qualities of the abrasive article are thus greatly increased. Furthermore, by so disposing the grits, it permits of the application of an additional sizing coat or coats to the back and to the front or cutting face of the abrasive material without completely burying the grits and as a thicker coat of adhesive may thus be employed on the cutting face of the abrasive material, the engagement of the adhesive material with the abrasive material is greatly enhanced, thus further tending to increase the life of the abrasive article. Such a sizing coat is indicated at 23.

As previously pointed out, where the electrostatic or electro-magnetic methods are resorted to in some of the coarser grades of abrasive devices made, it may be found that the electrostatic or magnetic field into which the particles are conducted may not exert on each individual particle sufficient force to cause proper orientation of the particles, for the reason that the static effect is substantially proportional to the area of the particle, and the coarser the particle, the smaller the area of effect per weight. Therefore, as larger grits or sizes of particles are employed, increased force is required to move the particle, and for some purposes, insufficient increase in force results because of the reduced area per weight. Therefore, in such cases, a form of the invention, as shown in Figure 5 may be resorted to wherein the mineral is applied to the adhesively coated backing in part by gravity and in part by electrostatic or electro-magnetic means.

In view of the fact that the electrostatic and electro-magnetic means may for some purposes

be alternatively employed. I have illustrated in Figure 5 merely the electrostatic elements, though it will be understood that electro-magnetic means may be employed in the same manner.

Referring in detail to Figure 5, I have illustrated a web of paper 86 coming off a roll 88 and passing through an adhesive coating device illustrated in general at 90. The web 86 is thence trained over rollers 87, 87a, so that it has a substantially horizontal flight 87b, which receives grits in the desired amount from an ordinary conveyor 92, said conveyor receiving grits from the hopper 93. The web of paper thereon is carried downwardly to a horizontal flight 96 by the provision of rollers 94, 94, and an electrostatic or electro-magnetic or other grit applying means for applying grit counter to gravity may be employed at one or more points as indicated at A and B, wherein the conveyors 100 and 101 convey grit from suitable hoppers 102 and 103, and electrodes 104, 105 and 106, 107 serve to apply the grit.

As the web passes over the rollers 87a and 94, a quantity of the mineral deposited from the conveyor 92 onto the web will drop off, and, for conveying away this excess mineral, I provide a transversely running conveyor 95a arranged between the flight 96 and the conveyor 102.

It will be understood that while the electrostatic and electro-magnetic means for casting counter to gravity are illustrated in Figure 5, the mechanical means hereinabove described may be conveniently employed in these locations without departing from the spirit of the invention. However, the reason the electro-magnetic and electrostatic elements are particularly mentioned here is that the difficulty of counter casting successfully with the coarser grains is more likely to arise with these elements than with the vibrator or air blast heretofore described.

I wish to point out that where the expressions "electro-magnetic" and "electrostatic" are employed in the specification, I refer to the employment as well of a permanent magnet or some other form of static charge or magnetic charge which will perform the function.

Having thus described my invention and illustrated its use, what I claim as new and desire to secure by Letters Patent is:

1. The method of coating a backing with charged particles of material which includes the step or steps of first applying a coating of adhesive to a surface of said backing, then successively impinging increments of said particles against said adhesive coated surface until a plurality of successively applied increments have been deposited on the adhesive, the particles of at least one of said increments being coated on said surface by applying a propelling force, acting to project particles upwardly against the force of gravity from a preliminarily distributed layer spaced from said surface of said backing, and to direct the particles into contact with said adhesive coated surface, the propelling force being generated by an electrostatic field.

2. The method of coating a backing with charged particles of material which includes the step or steps of first applying a coating of adhesive to a surface of said backing, then successively impinging increments of said particles against said adhesive coated surface until a plurality of successively applied increments have been deposited on the adhesive, the particles of at least one of said increments being coated on said surface by applying a propelling force, acting to project particles upwardly against the force of gravity from a preliminarily distributed layer spaced from said surface of said backing, and to direct the particles into contact with said adhesive coated surface, the propelling force being generated by an electrostatic field and said layer being distributed upon a movable carrier spaced from said backing and moving through said field.

3. The method of coating a backing with particles of material which includes the steps of applying a coating of adhesive to a surface of said backing and applying the particles of said material to said adhesive coated surface in a plurality of successively applied increments thereof, the particles of at least one of said increments of material being propelled upwardly against the force of gravity into contact with said adhesive coated surface of said backing from a preliminarily distributed layer of said particles of material spaced from said surface of said backing by applying to particles in said layer, a propelling force generated by an electrostatic field, within which field said particles of said layer are disposed.

4. In apparatus for coating particles of charged material upon a backing, the apparatus comprising in combination, means for providing adhesive to said backing arranged to unite said material to said backing, at least one movable carrier for providing said material in a layer spaced from said backing, and means for propelling said material upwardly against the force of gravity comprising a plurality of successively arranged pairs of opposed electrodes creating successively effective electrostatic forces between said spaced electrodes, and means for passing said backing successively between said successively arranged pairs of electrodes, whereby as the backing passes between said electrodes, the adhesively coated backing is impinged by a plurality of successively applied increments of said material.

5. In apparatus in accordance with claim 4, wherein said opposed electrodes are plates which achieve orientation of a substantial number of the particles in substantially normal to the plates and the backing which is passed between the plates.

6. In apparatus for coating particles of material upon a backing, in combination, means for applying adhesive to said backing to hold said particles to said backing, means for propelling said particles upwardly against the force of gravity from the surfaces of movable carriers therefor to a surface of said backing coated with said adhesive, comprising a plurality of successively arranged pairs of spaced electrodes creating successive electrostatic fields, and means for passing said backing successively through said electrostatic fields between said electrodes and in spaced relation to said carriers whereby a plurality of separate increments of said particles of material are successively applied to said adhesive coated surface of said backing.

RICHARD PAUL CARLTON.

[fol. 823]

6

CERTIFICATE OF CORRECTION.

Patent No. 2,376,343. May 22, 1945.

RICHARD PAUL CARLTON.

It is hereby certified that error appears in the above numbered patent requiring correction as follows: In the heading to the printed specification, line 7, strike out the word "Application" and insert instead --Continuation of application Serial No. 422,065, January 20, 1930. this application--; and that the said Letters Patent should be read with this correction therein that the same may conform to the record of the case in the Patent Office.

Signed and sealed this 16th day of October, A. D. 1945.

Leslie Frazer

(Seal) First Assistant Commissioner of Patents.

[fol. 824]

May 29, 1945. W. H. KING 2,376,922

METHOD OF AND APPARATUS FOR MAKING PILE FABRICS

Filed June 4, 1941 2 Sheets-Sheet 1

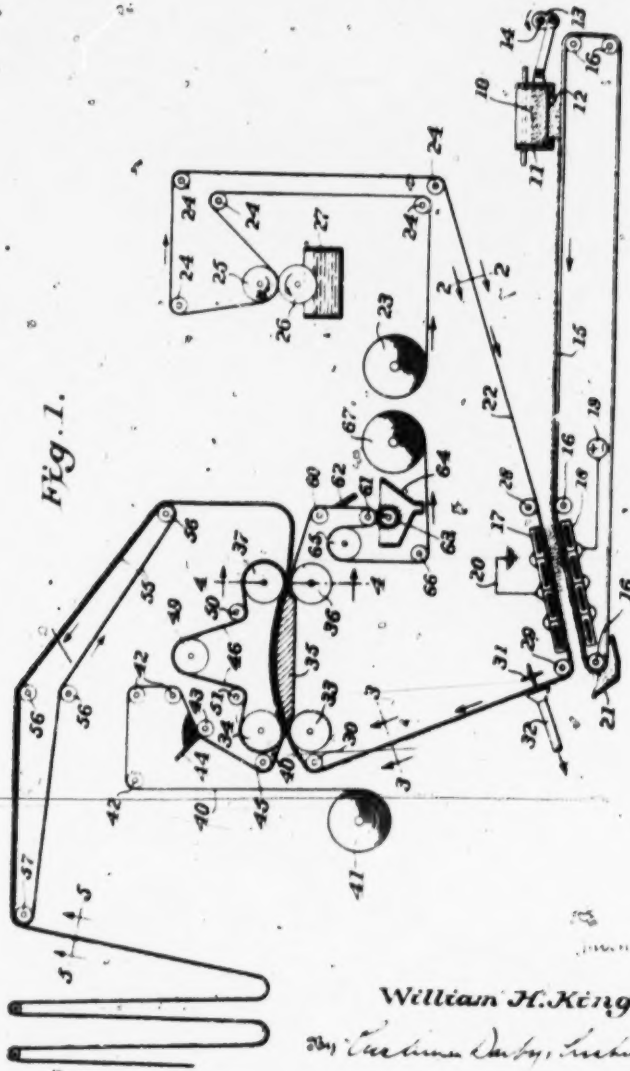

Fig. 1.

William H. King,

By Cushman Darby & Cushman

Attorneys.

May 29, 1945. W. H. KING 2,376,922

METHOD OF AND APPARATUS FOR MAKING PILE FABRICS

Filed June 4, 1941 2 Sheets-Sheet 2

Fig. 2.

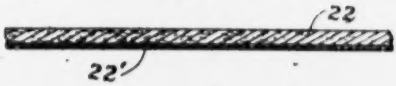

Fig. 3.

Fig. 4.

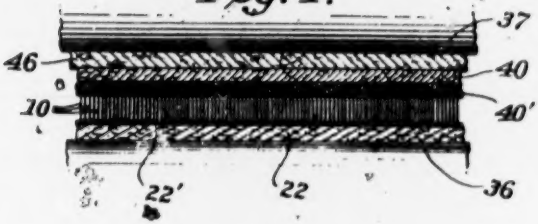

Fig. 5.

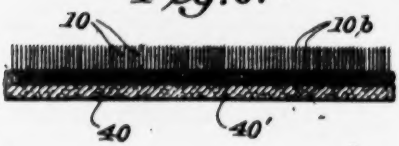

Inventor:

William H. King,

By Cushman Darby & Cushman

Attorneys.

[fol. 826]

Patented May 29, 1945

2,376,922

UNITED STATES PATENT OFFICE

2,376,922

METHOD OF AND APPARATUS FOR MAKING PILE FABRICS

William H. King, Troy, N. Y., assignor to Behr-Manning Corporation, Troy, N. Y., a corporation of Massachusetts

Application June 4, 1941, Serial No. 396,626

17 Claims. (Cl. 117—33)

The present invention relates to new and improved methods of and apparatus for coating, and more particularly, for coating flexible sheet material with fibrous products such as flock, in the production of pile surfaces and pile-surfaced materials.

The primary object of the invention is to produce pile fabric wherein the fibres forming the pile are adhesively united to the backing sheet in an improved, oriented position and by a bond of increased strength.

A further object is to produce a pile-surfaced fabric, wherein the pile-forming particles or flock are more deeply embedded, in oriented position, in the adhesive and are, therefore, more securely held in place.

Another object of the invention is to secure the pile-forming particles or flock to the adhesive with their outer ends spaced from the backing layer substantially exactly the same distance, to provide a more uniform surface appearance.

Another object of the invention is to provide a greater density of pile on the surface of pile fabric, than can readily be done with prior methods.

A further object of the invention is to provide a method which makes it possible to use a more viscous adhesive with certain types of pile-forming material than can be used with prior methods.

Another object is to provide a novel method of applying pile-forming material to a backing sheet in pattern form.

A further object is to provide positive control of the depth of penetration of the fibres into the adhesive and to control depth of penetration in accordance with the holding power of the adhesive.

A further important object of the invention is to produce a pile fabric product wherein the tops of the pile-forming fibres are all disposed in the same plane, equally spaced from the backing sheet, thereby giving the effect of a sheared pile fabric, such as velvet, without the necessity of employing a shearing operation.

Other and further objects and advantages of the invention will become apparent as the description of the invention proceeds.

Pile surface materials have heretofore been made by depositing pile-forming particles such as fibre or flock upon adhesively coated foundation materials. The particles have been oriented and arranged in parallelism, normal to the plane of the foundation material by mechanical agitation and by the use of electrostatic forces, or both. Examples of efficient electrostatic methods of depositing flock upon adhesively coated backing sheets may be found in the patents to Maston 2,173,675, Wintermute 2,173,032 and Amstutz 2,223,476.

It has also been proposed to subject the backing sheet to a beating or vibrating action as the flock is deposited, to effect orientation of the fibres. With such mechanical agitation, however, only a relatively small proportion of the fibres are disposed in parallelism, normal to the plane of the backing sheet. Moreover, with such mechanical orientation, the adhesion between the flock particles and the sheet is not sufficiently strong for all purposes.

In order to properly secure the flock to the backing sheet, it is desirable that the oriented particles penetrate the adhesive to a substantial extent and that the adhesive have good wetting characteristics for the flock. The viscosity of the adhesive has a major effect upon these factors, since, if the viscosity is low, the penetration of the adhesive by the fibres will be better and the wetting property will be increased. However, with certain adhesives, the first fibres that strike the adhesive will absorb a relatively larger quantity of the adhesive diluent or solvent than the adhesive solids, resulting in an increase of viscosity of the adhesive adjacent those particular fibres. The next fibres to be applied, therefore, encounter an adhesive layer of increased viscosity, with the result that they do not penetrate as far as the first-mentioned ones. Moreover, the last-mentioned particles absorb the adhesive diluent or solvent, when adhesives of the type referred to are being used, thereby further increasing the viscosity of the adhesive layer. This action proceeds as additional fibres are deposited, with the result that the viscosity progressively increases and the last fibres applied are only poorly secured. With the use of such adhesives, therefore, some of the fibres are very well anchored and other are not. Under wearing conditions, the loosely adhered fibres tend to drag with them, by their affinity, some of the other fibres that are more securely anchored, so that a pile surface material is produced, having wearing quantities that are unsatisfactory for certain uses.

The foregoing difficulties are particularly noticeable when latex adhesives are used, since the fibres tend to absorb water from the latex and increase the viscosity of the adhesive quite rapidly.

With the use of such adhesives, it has been found that, when the fibres are wetted, they acquire such an attraction for each other that their wetted ends are drawn together more than their

free dry ends, thereby producing a fanned or clumped effect and making it difficult for subsequently applied fibres to reach the adhesive. As a result, some of the fibres are anchored in a laid-down condition, which is undesirable.

In order to avoid these difficulties, when certain types of adhesives are used, it has been the practice in the flocking art to use adhesives of higher viscosity than that which would give the best penetration by the fibres and anchorage thereof to the backing sheet. With such high viscosity adhesives, the fibres are initially oriented upon the surface of the adhesive and attempts are then made to cause them to penetrate therein by the use of mechanical beaters and the like.

The foregoing difficulties are particularly pronounced when latex is used as the adhesive, since latex passes from a fluid liquid to a condition of relatively high viscosity upon the loss of very little water, an amount that is insufficient to properly wet enough of the fibres to provide a good flock layer. It is most desirable, however, to use latex as an adhesive medium, because of its economy and desirable final properties, and it is one of the objects of the present invention to provide a method of and apparatus for making latex an entirely satisfactory adhesive for use in the flock coating art.

When other types of adhesives are used, such as certain synthetic resin adhesives, however, the above-mentioned difficulties are not encountered, and the direct deposition methods described in the above identified patents are satisfactory for many purposes.

In accordance with the present invention, flock particles are deposited in oriented relation upon a transfer apron having a thin layer of relatively weak adhesive associated therewith, sufficient to hold, temporarily, the flock particles in closely packed oriented relation thereon, in parallelism, normal to the surface of the apron. The free ends of the flock particles so supported are then pressed, by mechanical pressure, into a layer of adhesive carried by a backing sheet, the last-mentioned adhesive having greater tenacity and strength than the first-mentioned temporary adhesive. The apron and the backing sheet are then moved apart and the flock particles stripped from the former are carried by the adhesive associated with the latter. The sheet so produced is then subjected to the usual drying and curing steps to produce a finished product.

The invention will be understood more fully by reference to the accompanying drawings, wherein an illustrative embodiment of the invention is illustrated diagrammatically.

Although the specific embodiment of the invention described below includes the electrostatic orientation and deposition of the pile-forming fibres upon a transfer surface, it must be understood that the invention is not confined to that type of orientation and deposition, since many of the advantages of the invention are applicable to gravity depositing and mechanical orienting methods.

In the drawings:

Figure 1 is a diagrammatic side elevation of an apparatus capable of performing the method of the invention, and

Figures 2, 3, 4 and 5 are greatly enlarged, fragmentary diagrammatic sections taken on lines 2—2, 3—3, 4—4 and 5—5 of Figure 1, respectively.

Loose flock material 10, of any suitable kind (such as that described below in connection with a specific example of the method of the invention), may be deposited by hand or by conventional conveying means into a hopper 11 having a screen bottom 12, the hopper being mounted for agitation or vibration under the influence of a crank 13 carried by a continuously rotating shaft 14, driven by appropriate means, not shown. A feed belt 15, trained about and driven by suitable rollers 16, receives the sifted flock in an evenly distributed layer from the hopper and carries the same through an electrostatic field between upper electrodes 17 and lower electrodes 18, the latter being connected to a suitable source of current 19 and the former connected to ground at 20. A trough 21 at the end of the flight of the feed belt 15 receives any material not deposited by the electrostatic field.

A transfer apron 22, unwound from a roll supply 23, is trained over rollers 24 and through a pair of rollers 25, 26, the latter of which dips into an adhesive receptacle 27 and applies a coating of adhesive to the apron. The apron is drawn, from the last guide roller 24 beneath additional guide rollers 28, 29, by a roll 30 through the electrostatic field, adjacent the upper electrode 17. In the electrostatic field, the flock particles are projected upon and are secured to the adhesively coated transfer apron 22, as is well understood in the electrostatic flocking art. Flock particles not adequately secured to the apron may be removed by a light beater 31 and a suction device 32.

Beyond the upper roll 30, the transfer apron passes between the first pair of rollers 33, 34, over a supporting platform 35 having a convex arcuate upper surface, and then between a second pair of rollers 36, 37.

A sheet of backing material 40, drawn from a roll supply 41, passes over rollers 42 and through an adhesive coating apparatus comprising a roller 43 and a doctor blade 44, so that one surface of the sheet is coated with an adhesive, of a type described below in connection with a specific example of the method. The sheet is trained for movement under a power driven guide roll 45 and then between the first pinch rolls 33, 34 and the second pinch rolls 36, 37, in superimposed relation to the free ends of the flock particles on the apron 22, the apron being supported by the arcuate platform 35.

A backing-up, pressure-applying blanket 46 is trained about rollers 34, 37, 46 with one of its flights directly behind and above the coated backing sheet 40. The degree of pressure applied by the blanket 46 to the backing sheet and by the backing sheet to the flock particles on the transfer apron may be controlled by adjustably mounted idler rollers 50, 51 which control the tension in the blanket.

The backing sheet 40 and the flock particles embedded in the adhesive coating thereon move away from the transfer apron, with the result that the flock particles are stripped from the latter. The sheet is led upwardly to and carried by the upper surface of an endless conveyer 55, trained about guide rollers 56 and a driven roller 57. The backing sheet moves with the conveyer 55 for a sufficient time to permit the adhesive to dry somewhat, whereupon the sheet is delivered to further drying and curing means, not shown.

The transfer apron 22 is guided over rollers 58, 61, past a scraper blade 62 and a rotating brush 63, which effectively clean the surface of the apron, the matter removed being received in a trough 64 which may be connected to suction removing means. The apron next passes over a positively driven roll 65, an idler 66 and is wound

[fol. 828]

up in a roll 67, which may eventually be removed and re-used.

Instead of using a long, discontinuous transfer apron 22, adapted to be unwound from the roll 23 and rewound into the roll 67, it is entirely feasible to employ a continuous, endless apron. In such case, one flight of the apron passes directly from the roller 66 through appropriate tension rollers, not shown, to the roller 24, the apron being cleaned by the blade 62 and the brush 63 before it receives its next coating of adhesive. Instead of using a transfer apron or belt, the invention contemplates the employment of a relatively large transfer cylinder or drum which may itself constitute one of the electrodes for the electrostatic field or which may have its periphery arranged to revolve through the space between a pair of fixed, arcuate electrodes, so that, in any event, the fibres are deposited on the periphery of the cylinder which has previously been coated with a relatively weak adhesive. The particles in this case may be transferred to the backing sheet by means similar to that shown in Figure 1, the periphery of the drum constituting the equivalent of the arcuate apron supporting platform 26.

The adhesively coated, final backing sheet 69 may be brought into contact with the free upper ends of the flock secured to the transfer apron 22 immediately upon the entrance of the sheet and the apron between the bite of the rollers 33, 34, or, on the other hand, the contact between the adhesive on the backing sheet and the flock layer can be made to take place at a point between the first rollers 33, 34 and the second rollers 36, 37, so as to provide a more gradual penetration of the fibres into the adhesive. In fact, the latter procedure is preferred and the second pair of rollers 36, 37 are carefully set so as to assure the proper depth of final penetration of the fibres into the adhesive layer on the permanent backing sheet. The backing-up blanket 68 which forces the coated sheet 69 onto the flock particles is desired as a means for accurately controlling the pressure between the two and as a means for preventing wrinkles and the like in the sheet. In many cases, particularly when a relatively heavy permanent backing sheet is used, the blanket 68 may be eliminated.

The invention contemplates applying flock in pattern form and this may be readily accomplished by printing, stencilling, or otherwise applying to the transfer apron, a weak adhesive layer according to a predetermined design. In such case, the flock will be applied to the transfer apron only over the area covered by the design and the flock so deposited will be transferred to the permanent backing in the same manner, so that the design will appear on the finished product. In the alternative, the adhesive on the backing sheet 69 may be applied by printing, stencilling, or the like in any desired pattern or design, in which case the continuously and evenly coated apron 22 will apply the pile-forming material only to those portions of the permanent backing which have been adhesively coated, with the result that the pile surface in the finished product will follow the desired pattern or design. This method is preferred in some cases, since it results in a saving of the amount of final adhesive employed and produces a finished product wherein the nonflock coated portions of the finished product are not adhesively coated.

Many types of rubber cement and latex adhesives may be used for the permanent backing sheet, in accordance with the present invention. The following example is satisfactory:

Adhesive example

	Formula #1	Formula #2
	Parts	Parts
Rubber at 60% latex	100	100
Zinc oxide	2	3
Sulphur	1	1.5
Zinc dibutyldithiocarbamate	1	
Diisopthyl-p-phenylenediamine	1	
Zinc salt of 2-mercaptobenzothiazole	1	1
Dipentamethylene-thiuram-tetrasulfide		1.5
Casein (as 28% NH_4 sol.)		.35
Water (total)	4	4
	57	56.75

The above formula may be prepared by methods well known in the latex compounding art. Usually the pigments are ground with an equal weight of water in a ball mill until good dispersion is obtained. The casein solution is first added to the rubber latex after which the dispersed pigments are stirred in. After the fibres are embedded in the above adhesive, the water can be evaporated by suspending the finished material in air at 180° F. for 15 minutes. After the material is dry, it can be vulcanized and in the case where the above formula #1 is used, it can be cured for 30 minutes at 220° F.; where the above formula #2 is used, it can be cured for 10 minutes at 260° F. to give satisfactory results.

While my process and apparatus have peculiar advantages for the use of rubber latex in anchoring the fibres to the backing, but they are not limited to latex, but may be used with a wide variety of adhesives. In particular, my process and apparatus are well adapted for use where the adhesives consist of re-dispersed rubber or water emulsions of synthetic resins for the reasons already pointed out in connection with latex; that is, I overcome the difficulties incident to the ready absorption of water by many of the fibres used in making pile fabrics. I may also use rubber cement or solutions of various flexible resins in organic solvents for my adhesive.

The following examples give suitable temporary adhesives for application to the transfer apron 22:

Temporary adhesive Example 1

	Per cent
Glycerine	70
Alcohol	25
Water	5
	100

The method of preparing this mixture is well known to those skilled in the art.

The alcohol merely serves to dilute the mixture so that a very thin film can be applied to the surface of apron 22, and the water is present to reduce fire hazard, in the event that some of the alcohol does not evaporate before the coating reaches the electrostatic field.

Temporary adhesive Example 2

A very light coating of glycerine.

Temporary adhesive Example 3

Grind in a ball mill 75 parts of bentonite clay in a mixture of 75 parts alcohol and 100 parts glycerine. After this is thoroughly dispersed, pour in a mixture of 50 parts water with 10 parts alcohol. This gives a mixture that has proper-

ties that will enable it to be coated onto a transfer apron by means of a doctor blade. Enough time should be allowed so that the alcohol can evaporate before the apron enters the electrostatic field. This mixture is coated onto the transfer apron which may or may not have been previously prepared by coating with a mixture of casein,—water—28% NH_3—glycerine and whiting. A heavier coating of Example 2 is required than of Examples 1 or 2. The transfer apron has to be re-coated each time it is used.

A specific example in accordance with the method of the present invention will now be described, wherein the method and apparatus of the present application have been employed in the manufacture of automobile body, side-wall material, consisting of a fabric backing coated with a latex adhesive on which is deposited oriented rayon fibres. Referring to Figures 1 and 2, three denier rayon fibres 18, .030" long and dyed green properly processed by the supplier are placed in the hopper and are sifted through the vibrating screen in a thinly, uniformly and evenly distributed layer on the rubberized-fabric, endless feed belt 15, which is travelling at the rate of about 50 feet per minute. It is understood, of course, that this speed can be varied more or less depending upon the density of the flock desired. The feed belt is run much faster than the transfer apron, so that the flock can be thinly distributed thereon, with the result that the orientation of the fibres is improved and the deposition of a dense pile coat on the transfer apron is facilitated.

The transfer apron, wound up into roll 23 is is 1200# kraft paper which has previously been treated as follows. A mixture of the following:

	Per cent
Casein	8
Water	42
28% NH_3	2
Glycerine	20
Whiting	28

is applied in a thin layer to the paper by means of a doctor knife or a pair of squeeze rollers. 140 pounds of wet weight of this formula, applied in two approximately even coats, will cover about 1,120 yards of the paper 60" wide. When it has dried, the casein is fixed by an application of a light coating of formaldehyde such as 10% solution in water. After evaporating the water, the paper apron is rolled up into roll 23, from which it is unwound and drawn through coating rollers 25, 26 where it receives a coating 22' (Fig. 2) of the temporary adhesive, made as follows:

	Per cent
Glycerine	70
Alcohol	25
Water	5
	100

Five pounds wet weight of this material will coat about 100 yards of transfer apron 60" wide. In its further passage over idler rollers, evaporation of the liquid adhesive diluent takes place so that upon arrival at the electrostatic field, an extremely thin film of temporary adhesive is present on the surface of the paper. The transfer apron used in this particular example is approximately 60" wide, so that it extends about 1" to each side of the fabric to be coated, and is about 500 yards in length, and is run at a speed of about 10 feet per minute. The transfer apron can be run at speeds of from 2 feet to 50 feet per minute or more. However, any speeds faster than 10 feet per minute may require longer electrodes along the distance of travel of the web in order to acquire sufficient density of fibres on the transfer apron. The distance from the coating rollers 25 and 26 to the sets of electrodes 17 and 18 is about 22 feet.

The electrostatic field used in this particular instance is about 50" long in the direction of the travel of the web. Forty thousand volts are used with a 25 cycle alternating current. The distance between the electrodes 17 and 18 is approximately ¾". It is understood, of course, in other cases that different voltages, current frequencies and electrode spacings can be used and satisfactory results obtained. Also D. C. and pulsating D. C. current can be used. In this particular instance, very good flock deposition has been obtained if the atmosphere in the electrostatic field is maintained at a relative humidity of 40 to 50% at a temperature of 70° to 80° F.

The feed belt passes into this electrostatic field facing upwardly travelling along the lower electrode. The transfer apron, with the temporary adhesive facing downwardly, passes into and through the electrostatic field next to the upper electrode and the flock particles on feed belt are electrostatically charged, oriented and deposited on the transfer apron 22, to produce an oriented layer of flock, as shown in Figure 3. The upper ends 19a of the fibres 18, which eventually become the tops of the fibres in the finished product, all project through the thin coat of adhesive 22' and contact the apron 22, with the result that these ends are exactly aligned and lie in the same plane. Any minute irregularity that may exist through inadvertence in the length of the fibres, will show at their opposite ends 19b.

After the transfer apron passes through the electrostatic field, it is directed upwardly around idler roller 30 past the light beater 31 and then around the power-driven roller 32 between the lower nip roller 33 and the upper roller 34. It is drawn over the supporting platform 35 and through the second nip rollers 36, 37. The supporting platform having the arcuate surface can be made of any suitable material such as wood or metal having a smooth upper surface. To get a smoother and more frictionless surface, it may even be waxed although this is not necessary. The length of this arcuate surface of the platform is approximately 32½" and the radius of curvature of the upper surface is approximately 13' 2½", although these dimensions are not critical. The extreme ends of this arc are disposed as closely as possible to the bite of the rollers 33, 34 and 36, 37. The distance from the coating electrodes to nip rollers 33, 34 is approximately 22 feet, although this distance is not critical. The amount of flock deposited on the transfer apron amounts to approximately three ounces per square yard for this denier flock and length. This may be operated to give a density of about 200,000 to 300,000 fibres per square inch.

The backing which I have used in this particular instance is a 61" drill dyed brown having a weight of 1.76 yards per pound with a count of 68 x 40. The fabric as it is obtained from the cloth mills, being 61" wide, is given a filler or size treatment consisting of applying, by means of a doctor blade or coating rollers, a size which is made by the same formula given in the Adhesive example, formula 2. If a thinner size is

[fol. 830]

desired, the amount of casein can be decreased. This size is applied to the cloth at a rate which will amount to 1¼ ounces of dry compounded rubber from latex per square yard. This treatment is not necessary in every instance. In order to obtain better anchorage of the size coating, I find that it is preferable to scour and bleach the fabric before the dyeing and sizing steps are performed. This cloth is then calendered before or after the size treatment to give a smooth coating, although I prefer to calender the cloth after the size coating has been applied. The cloth by this time has shrunk in width to approximately 58".

This coated cloth 40 is unrolled from roll 41 and is drawn through the adhesive coating apparatus, where the adhesive made up as previously described in the Adhesive example, formula 2, is applied to the cloth by means of a doctor blade. In this particular instance, we desire to deposit on the cloth a latex film of .013" thickness. Therefore, the doctor blade is set .013" from the surface of the cloth. This will apply a coating 40' of latex to the cloth amounting to five ounces of dry compounded rubber from latex per square yard. This latex coated cloth then passes around and is pulled by power-driven roller 43 and passes around nip roller 34 and is pressed against the flock formation on transfer apron 22 by the endless belt 46 which is made of rubberised cloth and is approximately 60" wide. I maintain enough tension on the belt 46 to force the ends 10b of the fibres 10 into the latex to the required depth without crushing or disturbing the orientation of the fibres (Fig. 4). In this particular instance, the space between nip rollers 33 and 34 is such that the distance between the surface of the transfer apron 22 and the surface of the supporting belt 46 is ¼". The space between the nip rollers 36 and 37 is maintained so that the distance between the surfaces of the transfer apron 22 and the supporting belt 46 is .040". Since the thickness of the backing 40 is .013" and the thickness of the latex film is .013" and the length of the fibres to be deposited is .030", a total of .083", the fibres 10 are gradually forced into the adhesive 40' between the nip rollers until they substantially touch the surface of the fabric 40. Since the thickness of the fabric is .013" and the length of the fibre is .030" amounting to .043". It will be seen that the fibres in passing between nip rollers 36 and 37 are bent .069". This is not enough to crush the fibres or disturb their orientation, but will force them through the total thickness of the adhesive film 40'. It is found that these fibres penetrate the adhesive film to the depth of .011" with .019" of the fibres remaining exposed above the surface of the adhesive. If some of the fibres are inadvertently shorter than the standard length, they will not be pressed as deeply into the adhesive 40', but their top ends 10a will still be exactly aligned with the other, standard length fibres.

The purpose of the arcuate surface or platform 38 is to force the transfer apron upward and create an arc in the transfer apron 22, supporting belt 46 and backing sheet 40, so that tension can be placed on the sheet 40, holding it firmly against the fibres 10 on the transfer apron. Figure 4 illustrates quite clearly how these fibres 10 are forced through the adhesive layer 40' to the surface of the fabric 40. It is understood that the adhesively coated fabric travels at the same rate of speed as the transfer apron 22, that is, 10 feet per minute.

Although belt 46 can be driven at a synchronous speed with transfer apron 22, it has been found in actual practice that enough power to drive it is obtained through its contact with the backing sheet 40, which, in turn, is in frictional contact with the flock coated transfer apron 22.

In this process, the fibres 10 are more securely attached by the adhesive film 40' to the fabric 40, so that when this fabric is separated from the transfer apron 22, as shown in Figure 5, the flock is so securely anchored by this permanent adhesive film that it is entirely pulled loose from the temporary adhesive film 22' on the transfer apron.

After the flock coated cloth leaves the nip rollers 36 and 37, it is fed for a distance of approximately 3 feet in a slack condition and then on to supporting the belt 50 which is trained around rollers 56, and driven at the same speed as the backing sheet and transfer apron. The temperature around belt 50 is at room temperature and the coated fabric is supported thereon for a distance of approximately 20 feet, at which point coated fabric is festooned and passed through a drying room. The cloth remains in the drying room, which is maintained at a temperature of 180° F., for 15 minutes, whereupon it passes into a vulcanising chamber, where it remains for 10 minutes at a temperature of 260° F. The material is then cooled, taken down and rolled up.

The final vulcanised fabric has gradually shrunk to a width of 55" and the total weight of the fabric plus the rubber plus the fibre amounts to 14 ounces per square yard. The weight of the cloth in the finished product is 6 oz./sq. yd. The weight of the flock in the finished product is 3 oz./sq. yd. The weight of adhesive (dry compounded rubber from latex) is 5 oz./sq. yd.

It must be understood that the present invention is not limited to the specific method steps described above, or to the details of construction of the apparatus shown in the accompanying drawings, but covers all modifications as to method and apparatus, coming within the scope of the appended claims and their equivalents.

I claim:

1. The method of forming pile-surfaced material which comprises coating a transfer surface with a relatively weak adhesive, depositing on said coating a layer of pile-forming material in oriented relation with the particles thereof substantially normal to said surface, coating a backing sheet with a stronger adhesive, bringing the coated surface of the latter sheet into contact with the pile-forming material on the transfer surface, and transferring the pile-forming material from the transfer surface to the sheet while maintained in oriented position.

2. The method of forming pile-surfaced material which comprises applying to one surface of an elongated apron a thin coating of a relatively weak adhesive, depositing on the coated surface of the apron a layer of closely packed pile-forming fibres in oriented relation with the fibres substantially normal to said surface, applying a relatively thick coat of a stronger adhesive to one surface of a backing sheet, bringing the coated surface of the latter sheet into contact with the free ends of the fibres on the apron and embedding said ends in the thick coat of stronger adhesive, and stripping the pile-forming material from the apron and transferring the same to the

backing sheet while the fibres are maintained in oriented position.

3. The method of forming pile-surfaced material which comprises continuously moving an apron having a relatively weak adhesive coating on one surface thereof through an electrostatic field, depositing upon said adhesive coating, under the influence of the field, a layer of pile-forming material with the particles thereof in oriented position, and continuously transferring the oriented layer of pile-forming material to an adhesively coated backing sheet in oriented position.

4. The method of forming pile-surfaced material which comprises electrically depositing a layer of pile-forming material, such as flock, upon an adhesive coated apron in oriented position with the individual particles disposed in substantially normal relation to the apron, coating a backing sheet with a coating of a stronger adhesive than the adhesive on the apron, continuously moving the sheet and the apron along converging paths to cause the pile-forming particles on the apron to penetrate the adhesive on the sheet, and separating the apron and the sheet to cause the pile-forming material to be transferred from the former to the latter.

5. The method of forming pile-surfaced material which comprises continuously depositing on a moving feed belt, a layer of loose, comminuted pile-forming material such as flock, coating an apron with a relatively weak adhesive, conducting the apron and the belt through an electrostatic field and thereby causing the flock to be deposited in oriented relation upon the adhesive coating on the apron, coating a backing sheet with a stronger adhesive, conducting the apron and the sheet into such proximity that the coating on the sheet contacts the oriented flock on the apron, and separating the apron and the sheet, thereby causing the flock to be transferred from the former to the latter.

6. The method of forming pile-surfaced material which comprises sifting onto a relatively rapidly moving feed belt a layer of loose, comminuted pile-forming material such as flock, coating a transfer surface with a thin layer of relatively weak adhesive, conducting the transfer surface and the belt through an electrostatic field with the transfer surface moving at a slower speed than the belt and thereby causing the flock to be deposited in closely packed and oriented relation upon the adhesive coating on the transfer surface, coating the backing sheet with a relatively thick layer of a stronger adhesive, conducting the transfer surface and the coated backing sheet at the same rate of speed into such proximity that the free ends of the oriented flock on the transfer surface penetrate the adhesive on the sheet, and then separating the sheet from the transfer surface, thereby causing the flock to be stripped from the transfer surface and transferred to the sheet.

7. The method of forming pile-surfaced material which comprises depositing upon a continuously moving transfer surface having a relatively weak coating of adhesive thereon, a closely packed layer of pile-forming material in oriented relation with the fibres thereof substantially normal to said surface, causing the transfer surface to follow an arcuate path with the coated side convex, moving a backing sheet having a coating of relatively strong adhesive along said arcuate path with the adhesive coated side facing the transfer surface, applying pressure to the backing sheet to cause the oriented fibres to penetrate the adhesive thereon, and thereby transferring the fibres to the backing sheet.

8. The method of forming pile-surfaced material which comprises depositing on a transfer apron having a coating of relatively weak adhesive thereon, a layer of closely packed pile-forming material such as flock with the fibres thereof oriented and disposed substantially normal to the apron, moving said apron along an arcuate, convex path, coating a backing sheet with a layer of relatively strong adhesive, moving the backing sheet along a path following the arcuate path of movement of the apron with the adhesive on the concave side, and bringing the layer of relatively strong adhesive into contact with the fibres on the belt during such movement, whereby the fibres in oriented position are transferred to the backing sheet.

9. The method of forming pile-surfaced material which comprises coating a transfer apron with a thin coating of a relatively weak adhesive, depositing on said coating a layer of closely packed pile-forming material in oriented relation with the fibres thereof substantially normal to said surface, coating a backing sheet with a relatively thick layer of a stronger adhesive dispersed in a medium containing water, bringing the coated surface of the latter sheet into contact with the pile-forming material on the apron, and transferring said material from the apron to the sheet while maintained in oriented position.

10. The method of forming pile-surfaced material which comprises coating a transfer apron with a thin coating of a relatively weak glycerine adhesive, depositing on said coating a layer of closely packed pile-forming material in oriented relation with the fibres thereof substantially normal to said surface, coating a backing sheet with a relatively thick layer of a stronger, rubber latex adhesive, bringing the coated surface of the latter sheet into contact with the pile-forming material on the apron, and transferring said material from the apron to the sheet while maintained in oriented position.

11. The method of forming a sheet of pile-surfaced material in simulation of sheared pile fabric, but without shearing the pile and wherein the outer ends of the pile-forming fibres all lie in the same plane which comprises coating a moving transfer surface with a relatively weak adhesive, depositing on said coating, in oriented relation, a closely packed body of pile-forming fibres cut to substantially the same length with the axes of the fibres substantially normal to the transfer surface and with the ends of the fibres substantially in contact with the surface and lying in a common plane, coating a backing sheet with a relatively thick layer of a stronger adhesive, bringing the coated surface of the latter sheet into contact with the outer ends of the pile-forming fibres on the transfer surface and causing said ends to penetrate the relatively thick layer of adhesive, and stripping the fibres so secured to the backing sheet from the transfer surface, whereby the ends of the fibres formerly in contact with the transfer surface become the outer ends of the pile and all lie in the same plane.

13. An apparatus for forming pile-surfaced material made up of a backing sheet and pile-forming fibres adhesively secured thereto, comprising a continuously moving transfer surface, means for forming on said surface a layer of said pile-forming fibres in closely packed oriented rela-

tion with said fibres disposed substantially normal to the surface and weakly secured thereto by adhesive, and means for continuously moving and guiding said backing sheet having a relatively strong layer of adhesive thereon into transferring contact with the free ends of the pile-forming fibres on the transfer surface, whereby the pile-forming material is transferred in oriented relation from said surface to the adhesive on the backing sheet.

13. An apparatus for forming pile-surfaced material made up of a backing sheet and pile-forming material adhesively secured thereto, comprising a transfer surface, means for lightly securing to said surface a layer of the pile-forming material in closely packed, oriented relation with the fibres substantially normal to the surface, means for moving the transfer surface along a convex arcuate path, means for guiding the backing sheet having a coating of relatively strong adhesive thereon along a path following said arcuate path of movement and with the strong adhesive in contact with the fibres, and means for moving the sheet away from the transfer surface to strip the pile-forming material therefrom.

14. An apparatus for forming pile-surfaced material comprising a transfer surface having a coating of relatively weak adhesive thereon, electrostatic means for depositing on said surface a single layer of pile-forming fibres in oriented relation, and means for continuously and progressively moving an adhesively coated backing sheet into transferring relation to the free ends of the oriented pile-forming fibres, to strip the same from said transfer surface and to secure the same to the sheet in oriented relation.

15. An apparatus for forming pile-surfaced material comprising means for producing an electrostatic field, means for delivering comminuted flock to the field, means for continuously moving an adhesively coated transfer apron through the field in position to receive the flock in oriented relation by electrostatic deposition, means for continuously moving the apron along a predetermined path outside of the electrostatic field, means for moving a coated backing sheet, means outside of the electrostatic field for guiding said sheet to bring the adhesive coating thereon into contact with the flock on the apron, and means for continuously separating the apron and the backing sheet to strip the flock from the former and to transfer the same in oriented position to the latter.

16. The method of forming pile-surfaced material which comprises coating a transfer surface with a relatively weak adhesive, depositing on said coating a layer of pile-forming fibres such as flock, embedding only one end of each of a substantial proportion of the fibres in said relatively weak adhesive, coating a backing sheet with a substantially stronger adhesive than the first-mentioned adhesive, bringing the coated surface of the backing sheet into contact with the fibres on the transfer surface to embed one end only of each of a substantial proportion of the fibres in the latter adhesive, separating the sheet and the surface and thereby transferring the fibres from the surface to the sheet.

17. The method of forming pile-surfaced material which comprises coating a continuously moving transfer surface with a relatively weak adhesive, depositing on said coating a layer of pile-forming fibres such as flock, embedding one end only of each of a substantial proportion of the fibres in said relatively weak adhesive, coating a continuously moving backing sheet with a substantially stronger adhesive than the first-mentioned adhesive, continuously bringing the coated surface of the backing sheet into contact with the fibres on the transfer surface to embed one end only of each of a substantial proportion of the fibres in the latter adhesive, and continuously separating the sheet and the surface and thereby transferring the particles from this surface to the sheet.

WILLIAM H. KING.

[fol. 833]

Aug. 17, 1948. J. S. SMYSER 2,447,374

METHOD OF APPLYING COATING MATERIALS

Original Filed April 20, 1934 3 Sheets-Sheet 1

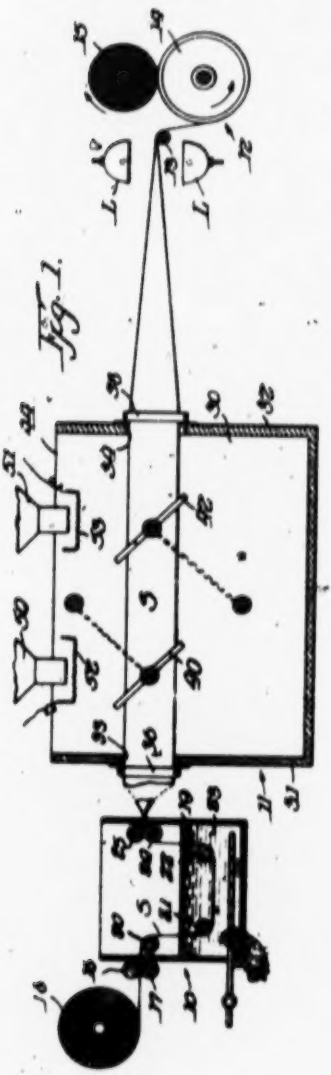

Fig. 1.

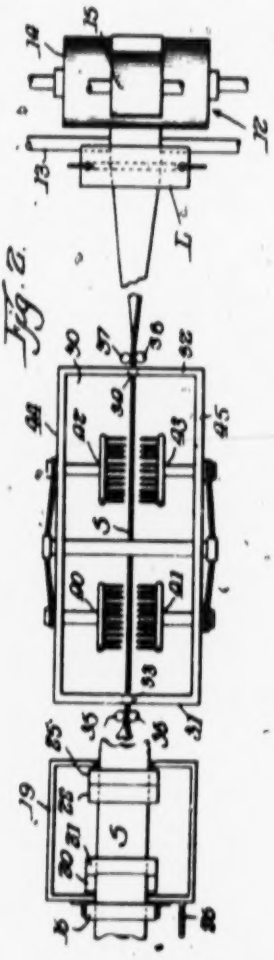

Fig. 2.

INVENTOR

James S. Smyser, deceased
By Granite Trust Company, Executor
By Paul Carpenter
Atty

[fol. 834]

Aug. 17, 1948. J. S. SMYSER 2,447,374

METHOD OF APPLYING COATING MATERIALS

Original Filed April 25, 1934 3 Sheets-Sheet 2

Fig. 5.

Fig. 3.

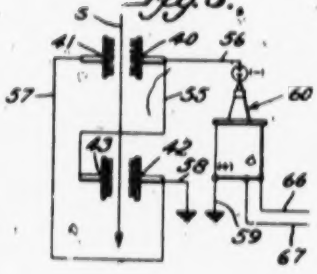

Fig. 6.

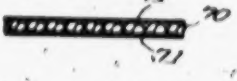

Fig. 4.

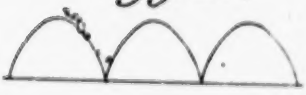

Fig. 11.

INVENTOR
JAMES S. SMYSER, DECEASED
BY GIRARD TRUST COMPANY, EXECUTOR
By Paul Carpenter
Atty

[fol. 835]

Aug. 17, 1948. J. S. SMYSER 2,447,374

METHOD OF APPLYING COATING MATERIALS

Original Filed April 25, 1934 3 Sheets-Sheet 3

Fig. 7.

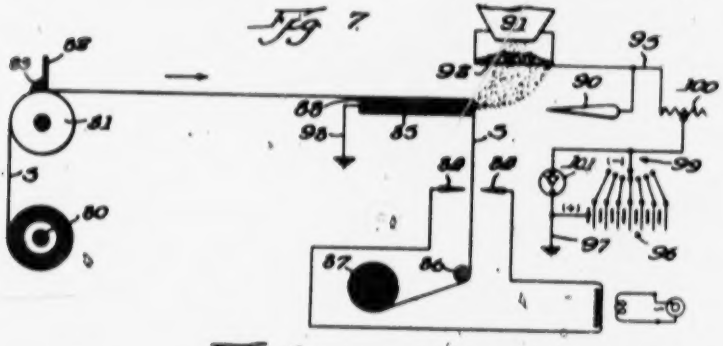

Fig. 8.

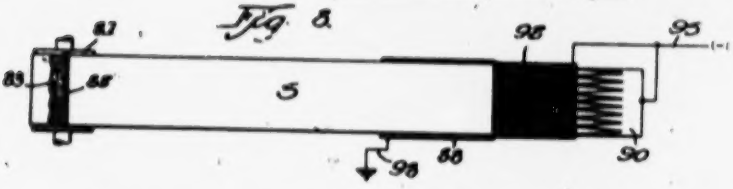

Fig. 9.

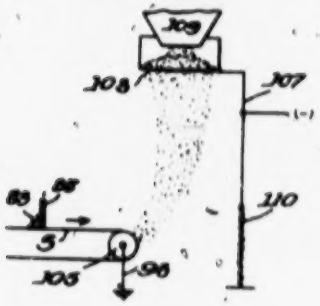

Fig. 10.

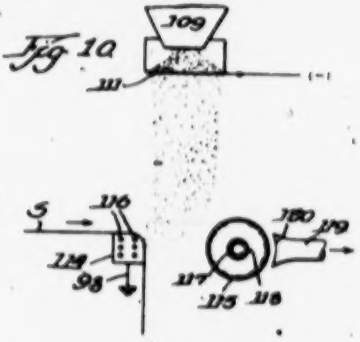

INVENTOR

JAMES S. SMYSER, DECEASED,

BY GRANITE TRUST COMPANY, EXECUTOR.

By Paul Carpenter

Atty.

[fol. 836]

Patented Aug. 17, 1948

2,447,374

UNITED STATES PATENT OFFICE

2,447,374

METHOD OF APPLYING COATING MATERIALS

James S. Smyser, deceased, late of Quincy, Mass., by Granite Trust Company, executor, Quincy, Mass., assignor, by mesne assignments, to Behr-Manning Corporation, Troy, N. Y., a corporation of Massachusetts

Continuation of application Serial No. 721,388, April 25, 1934. This application October 18, 1939, Serial No. 301,294

3 Claims. (Cl. 117—93)

1

This invention relates to a method of applying particles and various forms of comminuted materials to a base member, and to the resulting product.

This application is a continuation of the copending application of James S. Smyser, Serial No. 722,388, filed April 25, 1934.

The principal objects of the invention are to provide a novel method for applying particles and finely divided materials, such, for example, as flock, linters, and the like fibrous material, abrasive particles, etc., to one or more surfaces of a base member, such as a piece of sheet material; to provide means for controlling the manner and rate of application or disposition of the particles so as to obtain a uniformly coated product having predetermined characteristics; and to provide means whereby unlimited lengths of sheet material may be coated efficiently and progressively, on either or both sides, more quickly, densely, uniformly and cheaply than by any apparatus and/or method heretofore used.

Other objects of the invention are to provide a strong and flexible product having a dense, homogeneous, villous finish simulating the appearance of either suede or a pile fabric; and to provide a finish of any desired density wherein the major portion of the fibers are disposed at substantially the same angle relative to the surface of the base sheet with their ends firmly embedded in an adhesive coating carried thereby.

Further objects relate to the mode of operation of the method, and will be apparent from a consideration of the following description and accompanying drawings which exemplify different embodiments of the invention.

In accordance with the present invention the surface (or surfaces) of the base member, or article to be coated is first rendered adhesive, as for example by the application of a suitable cementitious material, such as rubber cement, wax, paraffin, glue, or the like adhesive. When thus coated the base member is passed through an electrostatic field set up between one or more pairs of oppositely charged electrodes, and during its passage through the electrostatic field the particles to be applied are carried in a uniformly dispersed formation into the field either by gravity, a current of air, or in any other suitable manner.

Preferably the particles being conveyed to the field are charged in any suitable manner with the same charge as that of the electrode projecting them against the base member, and to this end they may be passed through a metallic

2

screen or the like member which is connected in the circuit of the projecting electrode. When thus charged, the particles, upon entering the electrostatic field are projected against the adhesive surface of the base member more uniformly and efficiently, and with much greater force than would otherwise be possible. Furthermore, the individual particles are more effectively aligned in the direction of the lines of force of the electrostatic field and, due to the increased force with which they are projected against the surface of the base member, are more deeply and firmly embedded in the adhesive surface of the base member. Moreover, movement of the charged particles toward the adjacent or projecting electrode is greatly minimized, if not substantially eliminated, and consequently considerable waste is eliminated and the efficiency of the method and apparatus is appreciably increased.

The construction and arrangement of the electrodes is such as to provide an electrostatic field of uniform flux density which extends across the path of the surface of the article to be coated and at an angle to its path of travel. The position of the individual particles relative to the surface of the base member may be controlled and/or varied by adjusting the relative position of the electrodes so as to attain the desired direction of the lines of force of the electrostatic field relative to the surface of the base member. To this end one or both of the electrodes may be adjustably mounted so that their position relative to each other may be varied.

The electrostatic field may be produced by a suitable source of potential such as a Kenotron or the like alternating current rectifier, a static machine, mechanical rectifier, or any other source which may be susceptible to control. The potential impressed upon or across the electrodes may vary within wide ranges, depending upon the character of the material to be deposited, the desired rate of deposition, etc., and the usual types of control instrumentalities may be employed to provide an electrostatic field of the desired characteristics.

The rate of deposition or application may be so controlled as to produce a coated product of any desired density by varying the quantity of particles supplied, the rate of travel of the base member through the field, and/or the electrical characteristics of the field, i. e., the flux density, voltage across the electrodes, etc. To this end suitable means may be employed to control the rate of delivery of the particles and the rate of

travel of the base member, and appropriate devices such as rheostats and various types of impedances, together with the usual indicators (ammeters, voltmeters, etc.), may be connected in the electrical circuits or circuit to provide for the adjustments necessary to attain an electrostatic field suitable for the application or deposition of the particular type of material to be applied.

In the drawings:

Fig. 1 is a diagrammatic side elevation, in section, showing a suitable apparatus;

Fig. 2 is a diagrammatic plan view of the apparatus shown in Fig. 1, the means for feeding the particles to be applied being omitted;

Fig. 3 is a schematic diagram illustrating one arrangement of the electrical connections;

Fig. 4 is a graphic representation of a pulsating current used in connection with certain forms of apparatus herein shown;

Fig. 5 is a fragmentary section showing a piece of fabric before the application of an adhesive coating;

Fig. 6 is a fragmentary section showing the fabric after the application of the adhesive coating;

Fig. 7 is a horizontal view with parts shown in section of another modified form of apparatus;

Fig. 8 is a plan view of the apparatus shown in Fig. 7;

Figs. 9 and 10 are horizontal views, with parts shown in section of further modified forms of apparatus; and

Fig. 11 is an enlarged fragmentary section showing a specimen of sheet material after being coated in accordance with the present invention.

The embodiment shown in Figs. 1 and 2 comprises a coating apparatus 10, a deposition apparatus designated by the numeral 11, and a winding mechanism 12. The coating apparatus may be of any type suitable for applying a coating of adhesive such as rubber cement, wax, glue, paraffin, or the like cementitious material to one or both surfaces of a base member or sheet material 8, and as here shown comprises a tank or trough 10 having guide rolls 16, 17, 20, 21 and 22 to conduct the sheet material through a fluid bath 23 of suitable adhesive, and squeeze rolls 24 and 25 to remove excess adhesive and distribute the coating uniformly over the surfaces of the sheet 8. The temperature and fluidity of the bath 23 may be controlled in any suitable manner as by steam coils 26. The winding apparatus 12 may be of any conventional form and is here shown as comprising a guide roll 13, a winding drum 14, and a reel 15, upon which the coated sheet material is wound. Suitable means (not shown) may be provided to regulate the speed of the winding drum 14 and thus control the rate of travel of the sheet material 8.

The deposition apparatus 11 comprises a box-like structure or housing preferably having uprights or walls of suitable electrical non-conducting material which define the deposition zone or chamber 30, the top of which may be open as shown in Fig. 1. The end walls 31 and 32 are provided with vertically extending slots or openings 33 and 34, respectively, through which the sheet material 8 may be conducted into and out of the zone or chamber 30, and guide rolls 35, 36, 37 and 38 are provided to support the sheet 8 for movement along a predetermined path through the deposition zone or chamber 30.

Electrodes 40, 41, 42 and 43 are mounted in pairs, each electrode comprising an elongate metallic bar secured to a suitable support and having a series of pointed members or prongs secured thereto and arranged as shown in Fig. 2. The electrodes are arranged in pairs 40, 41 and 42, 43 and may be connected to any suitable source of potential as hereinafter described. The elements of each pair are disposed on opposite sides of the path of travel of the sheet 8 and are preferably inclined at an angle to its line of travel so as to provide an electrostatic field which extends diagonally across the path of movement of the sheet 8. The purpose of this inclined arrangement is to insure a more even coating when the comminuted material is fed to the electrostatic field from the top.

Suitable means are provided to conduct the material to be deposited on the sheet 8 into the electrostatic fields set up between each pair of electrodes and to this end hoppers 50 and 51 may be arranged directly above electrodes 40, 41 and 42, 43, respectively. If it be desired to coat one side of the sheet 8 only, the hoppers may be arranged to discharge the coating material into a zone between the projecting electrode and surface of the sheet to which the material is to be applied. Where both sides of the sheet 8 are to be coated, the hoppers may be arranged to discharge the particles on both sides of the sheet 8 or, if desired, one hopper may be arranged to discharge the material on one side of the sheet and the other hopper on the opposite side, the particular arrangement depending upon the connections of the electrodes for the most effective results.

At some convenient location between the hoppers 50, 51 and the electrostatic fields, there may be provided means for imparting an electrostatic charge to the particles to be applied and to this end metallic screens 52 and 53, or the like, may be mounted beneath the discharge openings of the hoppers 50 and 51, as shown in Fig. 1, or, if desired, these screens may be integral with the hoppers. Each of the screens are connected to the negative electrode or to the negative terminal of a suitable source of potential so that the particles as they emerge from the screens have the same negative charge as that of the negative or projecting electrode. Suitable means (not shown) may be employed to control the rate of delivery of the particles from the hopper so that the density of the coating applied to the sheet material may be varied as desired.

Fig. 3 shows how the electrodes may be connected for use with a pulsating current (graphically represented in Fig. 4) such as may be derived from a two-tube Kenotron rectifier, or a continuous (non-pulsating) current such as may be derived from a static machine, mechanical rectifier with a suitable condenser, a high voltage generator, or the like.

In the arrangement shown in Fig. 3, the electrodes 40 and 43 are connected to each other by a conductor 86 and by a conductor 84 to a suitable source of potential, here shown as a Kenotron rectifier designated generally by the numeral 60. The electrodes 41 and 42 are connected to each other by a conductor 87 and to the ground by a conductor 88. With this arrangement the conductors 86 and 84 are preferably connected to the negative terminal of the Kenotron 60 or other source of potential and its positive terminal may be grounded by means of conductor 88 or connected to the positive terminal of the source of potential, as desired. When thus connected the current flows from the Kenotron through a main circuit comprising the con-

duster 36, the ground and conductor 38, at which point the main circuit branches into two circuits, one of which comprises electrodes 43 and 45 and the conductor 36, the second branch circuit comprising the conductor 37 and electrodes 41 and 44. The conductor 36 connects the branch circuits to the negative terminal of the Kenotron and thus completes the main circuit from the Kenotron to the electrodes.

This arrangement is particularly suitable for use when both sides of the sheet S are to be coated as it will be noted that the negative or projecting electrodes 40 and 42 are on opposite sides of the sheet S and the intensity of the electrostatic fields established between each pair of electrodes is always the same. When this arrangement is used in conjunction with the apparatus shown in Figs. 1 and 2, the screens 32 and 33 may be connected to the electrodes 40 and 43, respectively, so that the particles discharged into the electrostatic field are first given a negative charge. The hoppers 30 and 31 and the screens 32 and 33 are preferably positioned so that the charged particles are delivered into that portion of the electrostatic field between the projecting electrode and the adjacent surface of the sheet to be coated.

In using the apparatus shown in Figs. 1 and 2 to carry out the process, the sheet material S, such as a piece of fabric 70 (Fig. 5), is drawn from the supply roll 18, through the bath 22 where a coating 71 (Fig. 6) of adhesive such as glue, paraffin, rubber cement, wax or the like is applied to both surfaces. While the adhesive coating is still tacky the sheet is guided between each pair of electrodes, as indicated in Figs. 1 to 3. The electrical connections are adjusted to produce the desired potential across the electrodes and thus establish an electrostatic field of the desired strength and intensity. After having made these adjustments the material to be applied is fed from the hoppers 30 and 31 at a predetermined rate and after passing through the screens 32 and 33 where the individual particles receive a negative charge, they are then carried by gravity into the electrostatic field. When material such as flock, linters and the like fibers, as well as the various forms of abrasive material such as Carborundum, pumice, tripoli, etc., constitute the coating material being applied, the individual particles upon entering the electrostatic field, due to their elongate nature, become aligned in the direction of the electrostatic lines of force and are uniformly projected or bombarded against the adhesive surface of the sheet S so that their ends are deeply and firmly embedded in the adhesive coating at substantially the same angle and their projecting portions are disposed in substantial parallelism relative to each other. Due to the initial charge imparted to the particles, they tend to repel each other and become dispersed so that upon being projected against the adhesive surface of the sheet S the individual particles are spaced relatively to each other. As the individual particles align themselves with their major axes coinciding with the direction of the electrostatic lines of force, they may be applied to the sheet S so that their major axes are disposed at any desired angle relative to the surface of the sheet and consequently a greater number of particles per unit area may be applied to the sheet and with greater uniformity than is otherwise possible. When thus applied, their embedded ends are held in spaced relation to each other on the sheet S and by reason of

capillary action and the removal of the film of air surrounding the particles the adhesive creeps up or rises along their sides forming a meniscus about the embedded ends of each individual particle.

After having received a coating of particles on one or both surfaces, sheet S is guided out of the deposition zone and passed between a pair of ultra-violet lights L and L' or other suitable means operative to discharge or neutralize the static charge carried by the coated surface without causing sparking. After removing the static charge on the sheet, it is then wound up on the reel 15. During both the coating and deposition operations the sheet S is held under slight tension by the "pull" of the winding drum and reel. The density of the coating may be varied, as desired, by varying either the rate of travel of the sheet S, the rate of delivery of the particles from the hoppers 30 and 31, or both, and the strength of the electrostatic field may be varied accordingly.

When applying fibrous material at a relatively low rate, a potential of the order of 15,000 to 25,000 volts may be used, although I prefer to use potentials from 100,000 to 500,000 volts, particularly where heavier particles are being applied or where the rate of application is to be greatly increased, the particular voltage depending upon the character of the particles, the rate of travel of the sheet, and various other operating conditions.

Figs. 7 to 10 show a form of deposition apparatus particularly suitable for the application of flock, linters, asbestos fiber, wood pulp fibers, fine abrasives and the like materials, to an adhesive coated surface of a base member. In the embodiment shown in Figs. 7 and 8 the sheet material S is drawn from the supply roll 80 over a spreader roll 81 provided with a spreader blade 82 which is operative to distribute a fluid or plastic adhesive 83, such as rubber cement or the like, uniformly over the surface of the sheet S. After having received a coating of adhesive of suitable thickness, the sheet is drawn over or about a guide member which constitutes a part of the deposition apparatus. Thereafter the sheet is drawn downwardly between a pair of discharging electrodes 84, 84 connected to a suitable source of high potential alternating current, then over a guide roll 86 and wound on a reel 87, as in the previously described apparatus.

The guide member preferably comprises a plate electrode 85 interposed between two sheets of electrical non-conducting material such as Bakelite, the upper sheet or layer 88 having a smooth surface and being provided with a rounded or beveled edge as shown in Fig. 7. The negative electrode 90 is disposed opposite the end of the electrode 85 and is arranged so as to establish a field whose lines of force intersect the path of travel of the sheet S at any desired angle. Preferably the length of each electrode is sufficient to provide an electrostatic field having a width corresponding to that of the sheet S.

A supply hopper 91 is disposed above the electrostatic field and is constructed and arranged to deliver the fibrous material onto a screen 92 or the like device interposed between the field and the hopper. The electrical connections are shown schematically in Fig. 7 wherein a conductor 96 connects the screen 92 and the electrode 90 to the negative terminal of a suitable source of potential designated by the numeral 98, the positive terminal being grounded by a conductor 97 or connected to the electrode 85, as desired.

The electrode 85 may be grounded by a conductor 96 or otherwise connected to the conductor 97, and suitable means such as a controller 98 and rheostat 100 may be provided to control the potential and flow of current in the circuit. If desired, a voltmeter 101 may be connected in the circuit in the usual manner. The electrodes 84, 84 when connected as shown in Fig. 7, establish an alternating electrostatic field across the path of the coated sheet and are thus effective to discharge or neutralize any static charge carried by the sheet. The operation of the apparatus is substantially the same as that of the previously described apparatus, it being understood that the present arrangement is designed to coat only one surface of the sheet S at one time.

In the embodiment shown in Fig. 9, the cementitious material is applied to the sheet S in the same manner as in the embodiment shown in Figs. 7 and 8. In place of the guide member and plate electrode shown in Figs. 7 and 8, a roller electrode 105 is used. The roller electrode provides a guide roll about which the sheet S is drawn on its way to the winding drum or reel (not shown) and may be connected to the ground or otherwise, as in the previously described apparatus. The negative electrode 107 comprises a metallic screen member which is shaped to provide a substantially horizontal portion 108 through which the particles discharged from the hopper 109 may pass, and a depending portion 110 disposed opposite but parallel to the roller electrode 105. The supply hopper 109 is disposed above the horizontal portion 108 of the negative electrode so as to discharge the particles onto its horizontal portion. The negative electrode is connected to the negative terminal of the source of potential and the usual control devices may be provided as in the previously described apparatus.

The embodiment shown in Fig. 10 is somewhat similar to that shown in Figs. 7 and 9 but is particularly designed for use in applying particles to a sheet having an adhesive coating which comprises a thermoplastic cementitious material, such as wax, paraffin, etc., which must be maintained in a relatively fluid or tacky condition during the deposition operation in order that the ends of the particles may be firmly embedded therein. The apparatus embodies all the essential elements shown in Figs. 7 to 9 but in place of the electrodes shown therein, a metallic block 114 and rotor 115 are used. The block 114 constitutes the positive electrode and preferably comprises a metallic casting having a series of longitudinally extending ducts or channels 116 which may be connected to a steam or hot water supply (not shown). The outer walls of the block 114 which contact with the sheet material are smooth and the adjacent corner is preferably rounded or beveled to provide a suitable guiding surface over which the sheet S is drawn. The rotor 115 constitutes the negative or projecting electrode and preferably comprises a cylindrical screen or grating supported on a circular plate which is rotatably mounted on a stationary tubular shaft 117. The tubular shaft 117 is provided with a radially disposed axially extending slot coextensive with the longitudinal extent of the screen and facing away from the electrode 114. A conduit 118 having an elongate, horizontally extending, flaring mouth or entrance 120 disposed in radial alignment with the slot 119, is disposed closely adjacent to the electrode 115, as shown, and may be connected to a suitable suction fan or the like (not shown). A supply hopper 109 and a charging screen 111 are provided as in the embodiment shown in Fig. 7 and similar electrical connections, controls and means for discharging the static charge from the coated sheet may be employed. During the deposition operation the electrode 115 is continuously rotated, compressed air being introduced into the shaft 117 and discharged through the slot 119, and the electrode 114 is maintained at a predetermined temperature by the flow of steam or hot water through the ducts 116. The force of the air striking against the screen or grating of the electrode 115 is sufficient to remove any accumulations of oriented fibrous material or other particles and carry them into the conduit 120, thus keeping the negative or projecting electrode relatively free of oriented material.

Fig. 11 shows a coated sheet material produced in accordance with the present invention. The backing sheet consists of a sheet of heavy paper 128 and the fibers of the coating 127 are adhered thereto by a layer of adhesive 126 and are disposed at an angle of 45° to 60° relative to the backing sheet 128, thus presenting an appearance resembling suede.

The products are greatly superior to those made in accordance with the prior practices wherein the fibrous material is deposited on an adhesive surface of a backing sheet by means of a current of air or by gravity. In such products the individual fibers are heterogeneously disposed on the surface of the adhesive and hence do not assume any definite position relative to each other. Consequently, such products do not possess the dense and uniform characteristics nor the attractive appearance or finish of those made in accordance with the present invention. Moreover, the wearing qualities of such products are greatly inferior to those made in accordance with the present invention due to the fact that the individual particles are not embedded to a sufficient extent, if at all, in the adhesive, and as the body portions and the ends of the individual fibers provide the surface of the product, the individual fibers are soon worn away or are easily dislodged from the adhesive and hence expose uncoated areas of the binder. In the products made in accordance with the present invention the individual fibers, being firmly embedded in the adhesive, are not easily dislodged and as their ends constitute the major portion of the surface of the product, they effectively resist wearing. Furthermore, due to the fact that a much denser coating may be applied to the adhesive surface of the backing sheet, there is a greater number of fibers per unit area to resist wearing and abrasion, and consequently the product of this invention will outwear those made in accordance with the prior practices.

While different desirable embodiments of the present invention have been shown, it is to be understood that this disclosure is for the purpose of illustration only and that various changes and modifications may be made without departing from the spirit and scope of the invention as set forth in the appended claims.

Certain phases of the invention are disclosed and claimed in the co-pending application Serial No. 375,[illegible], filed January 22, 1941, which issued to Patent No. 2,[illegible] on June 30, 1942.

What is claimed is:

1. The process of coating to provide a suede-like surface which includes as steps thereof feeding a carrier or backing and applying an adhesive layer to a surface thereof, and depositing on said

adhesive layer particles of finely divided fibrous material under the influence of an electrical field whose lines of force are directed so as to orient the particles with their major axes at an angle of from about 45 to 90° with respect to the backing, attaching the ends of said particles to said adhesive layer and leaving the opposite ends free, thereby forming the suede-like surface for said carrier or backing.

2. The process of forming suede-like surfaces which includes as steps thereof feeding a carrier or backing and applying an adhesive layer to a surface thereof, and depositing on said adhesive layer particles of flock under the influence of an electrical field whose lines of force are directed so as to orient the particles with their major axes at an angle of from about 45 to 90° with respect to the backing, attaching the ends of said particles to said adhesive layer and leaving the opposite ends free, thereby forming the suede-like surface for said carrier or backing.

GRANITE TRUST COMPANY,
By IRVING L. SHAW,
Vice President,
Executor of the Last Will and Testament of James S. Swayer, Deceased.

REFERENCES CITED

The following references are of record in the file of this patent:

UNITED STATES PATENTS

Number	Name	Date
209,806	Goodall	Nov. 12, 1878
1,194,874	Peterson	Aug. 15, 1916
1,575,166	Hopkinson	Mar. 2, 1926
1,710,747	Smith	Apr. 30, 1929
1,788,080	Smyser	Jan. 13, 1931
1,856,080	Pugh	Apr. 26, 1932
1,896,234	Mekemer	Nov. 1, 1932
1,902,921	Underwood	Mar. 28, 1933
2,037,297	Schacht	Jan. 7, 1936
2,037,298	Schacht	Jan. 7, 1936
2,047,826	Thode	July 14, 1936
2,173,023	Winternute	Sept. 12, 1939
2,173,078	Mestou	Sept. 12, 1939

FOREIGN PATENTS

Number	Country	Date
339,913	Great Britain	Dec. 18, 1930
396,365	Great Britain	Aug. 1, 1933

[fol. 841]

IN THE UNITED STATES COURT OF APPEALS

FOR THE SEVENTH CIRCUIT

SEPTEMBER TERM, 1959—APRIL SESSION, 1960

No. 12737

BINKS MANUFACTURING COMPANY, ETC., Plaintiff-Appellant,

v.

RANSBURG ELECTRO-COATING CORPORATION, ETC., Defendant-Appellee.

Appeal from the United States District Court for the Southern District of Indiana, Indianapolis Division.

OPINION—July 27, 1960

Before SCHNACKENBERG, KNOCH and CASTLE, Circuit Judges.

CASTLE, Circuit Judge. Binks Manufacturing Company, plaintiff-appellant, prosecutes this appeal from a judgment of the District Court holding claims 1 to 6, 8, 10 and 11 of Starkey and Ransburg method patent No. 2,685,536 and Claim 4 of Starkey and Ransburg divisional apparatus patent No. 2,794,417 valid and infringed by use of the plaintiff's electrostatic spraying emitter. The judgment order enjoined plaintiff from further infringement, granted damages, reasonable attorneys' fees and costs to defendant, and dismissed plaintiff's cross-counterclaim alleging anti-trust law violations by defendant. Ransburg Electro-Coating Corporation, defendant-appellee, is the assignee-owner of both patents.

The action originated in the District Court as a complaint for declaratory judgment which was dismissed as [fol. 842] moot when the defendant patentee counterclaimed charging plaintiff with infringement. Plaintiff's answer raised the issues of validity and infringement and its cross-

counterclaim charged anti-trust law violations, unfair competition and misuse of patents. Substituted pleadings retained the same issues. The cause was heard on the pleadings, stipulations, admissions, answers to interrogatories, depositions, exhibits and the testimony of witnesses for the defendant.

The parties will be referred to by their original designations as plaintiff and defendant. Defendant is the patentee asserting infringement. Plaintiff is defending against that charge and affirmatively asserting anti-trust law violations.

The patents in suit relate to a method and apparatus for electrostatically coating articles with liquid coating material, including paint. There are several methods by which many articles of manufacture may be painted, including dipping, roller-coating, flow-coating and spraying. Defendant (and the predecessor partnership composed of its owners) has developed two methods of electrostatic coating. A compressed-air electrostatic system is referred to as the No. 1 Process. The patents in suit relate to an airless electrostatic system referred to as the No. 2 Process. During the year 1957 the total cost of all paint, varnish and lacquer used industrially in the United States approximated 644 million dollars. Approximately one per cent was applied by defendant's No. 2 Process and 0.6% by defendant's No. 1 Process.

In the No. 1 Process the paint is sprayed by means of compressed-air spray guns into an electrostatic field which is maintained between wires or electrodes and the conveyorized articles of manufacture so that paint particles are electrostatically charged and urged toward deposition upon the articles by the effect of the field.

In the No. 2 Process, the airless system to which the patents involved relate, the electrostatic field is maintained directly between an atomizing device and the articles on the conveyor. The liquid coating or paint is fed at a controlled rate to and distributed along the extended edge of a stationary or a rotary atomizing head. The strength of the electrostatic field at the edge is such that [fol. 843] the field is capable of electrostatically atomizing fine electrically charged particles from the liquid. The field

disperses these particles in the form of a spray and deposits them upon the articles to be coated. Patent No. 2,685,536. is upon the method employed in such airless electrostatic coating or spray-painting and patent No. 2,794,417 is upon the apparatus employed therein. The method and device electrostatically effect atomization, dispersion and deposition in combination and under control.

The No. 1 Process reduced coating material losses due to over-spray but in many instances considerable loss persisted because the electrostatic field only partially counteracted the tendency of the compressed-air blast to carry the coating material elsewhere than to the articles to be coated or painted. The No. 2 Process eliminated the necessity of compressed-air spray guns to atomize the coating materials. In many applications it virtually eliminated over-spray, and thus paint loss or waste. It reduced labor costs for clean-up operations and substantially reduced the manufacturer's investment in spray booths, exhaust systems and related equipment.

The District Court made 94 detailed findings and 11 conclusions of law. The evidence included testimony of defendant's witnesses, including expert testimony. Consequently, insofar as the findings concern factual issues such as the use made of prior art, and the nature of the improvement made over prior art, Rule 52 (a) Federal Rules of Civil Procedure, 28 U.S.C.A. applies. The scope of our review is thus limited to a determination of whether such findings are "clearly erroneous". *Armour & Co.* v. *Wilson & Co., Inc.*, 274 F. 2nd 143, 156. If they find support in the evidence we are bound thereby.

The errors relied upon by plaintiff arise out of the District Court's findings and conclusions and its exclusion of certain evidence offered by plaintiff.

Plaintiff contends the patents are invalid for lack of invention over prior art; that the court's finding of commercial success was error because the stationary electrostatic atomizing heads shown and described in the patent were never commercialized; that the method claims in suit fail to set forth a patentable invention; that Claim 4 of the apparatus patent is invalid as constituting double [fol. 844] patenting; that representations of commercial

success made to the patent office were false and the patents procured were therefore a fraud on the public and unenforceable; and that Claim 4 of the apparatus patent is invalid because of public use.

Prior art relied upon by plaintiff includes a description of a procedure referred to as "spinning sealing wax" in an 1859 publication entitled "Electrical Experiments" by one Francis; an 1887 article by C. V. Boys describing an experiment characterized as "electrical spinning"; 1915 and 1917 articles by Professor John Zeleny concerning the effect of electrical current on surface points of liquids and the instability of electrified liquid surfaces; Littlefield patents Nos. 1,360,654 and 1,854,475; Darrah patent No. 1,958,406; Gravley patent No. 2,359,476 and Heis patent No. 1,475,995.

The Francis and Boys articles disclose nothing more than laboratory experiments demonstrating that an electrostatic field could form threads or fibers from molten wax or other viscous material. Zeleny disclosed laboratory demonstrations of the fact that an electrostatic field is capable of exerting atomizing action from liquid surfaces. These references disclose action due to electrostatic forces. They neither disclose nor suggest the combination of steps or elements which endows defendant's method and apparatus patents with novelty and which adds to the source of useful knowledge. The Littlefield patents, at most, disclose electrostatic atomization, and like the Darrah reference which, in addition, shows projection of the atomized liquid by electrostatic force, they contain no suggestion of a spray-receiving object to attract the particles. Nor was defendant's electrostatic de-tearing process described in the cited Gravley patent suggestive of either a method or a device to apply a coating. Gravley discloses the use of electrostatic force to remove an excess of coating. In that process an article coated, as by dipping, with an excess of liquid coating material is partially drained and then brought into association with an electrostatically charged grid. The "tears" of excess liquid at the bottom of the article are attracted to the grid by electrostatic force and leave the article. The Heis patent deals with a method and apparatus wherein gaseous substances are

passed through an electrostatic field to promote chemical reaction. It suggests nothing useful in the field of the [fol. 845] patents here challenged. That plaintiff's accused device uses an atomizing head similar to the conductive disks disclosed by Heis does not have the effect, as plaintiff seems to urge, of suggesting defendant's novel adaptation of electrostatic atomization, dispersion and deposition to the field of spray-coating or spray-painting. None of the prior art teaches nor suggests the combined atomization, dispersion and deposition of coating material through utilization of electrostatic force.

Defendant's patents are combinations of old elements in a novel manner productive of new and useful results. The District Court was not in error in finding the defendant's method and apparatus patents impregnable as against the cited references to prior art, nor in finding they constituted a broad and basic invention. The evidence substantially supports the District Court's factual findings and it applied the correct criteria of invention. *Leeds & Catlin Company* v. *Victor Talking Machine Co.*, 213 U.S. 325, 332; *Lewyt Corporation* v. *Health-Mor, Inc.*, 7 Cir., 187 F. 2d 855, cert. den. 340 U.S. 823; *Great Atlantic & Pacific Tea Co.* v. *Supermarket Equipment Corp.*, 340 U.S. 147, 152.

The District Court's finding of commercial success was not "clearly erroneous". It was well supported by the evidence. Such a finding is not of itself determinative of the issue of invention. It cannot lend validity to a patent where invention is plainly lacking. *Goldman* v. *Bobins*, 7 Cir., 245 F. 2d 840, 844; *Great Atlantic & Pacific Tea Co.* v. *Supermarket Equipment Corp.*, 340 U.S. 147, 153. But, although not of itself decisive, commercial success is a factor which should not be ignored. *University of Illinois Foundation* v. *Block Drug Co.*, 7 Cir., 241 F. 2d 6, 11; *Technical Tape Corp.* v. *Minnesota Mining & Manufacturing Co.*, 2 Cir., 247 F. 2d 343, 348, cert. den. 355 U.S. 952.

The specific atomizing heads shown in the specifications of defendant's method and apparatus patents utilize spaced needles, spaced orifices, or spaced wire wrappings. The liquid emerging from the interior of the head is thus mechanically divided into droplets from which the atomization takes place. The defendant's commercial atomiz-

ing device utilized a rotating bell or rotating disk through which the liquid coating is fed and at the edge of which atomization takes place at a plurality of closely spaced points. However, neither the claims of the method patent [fol. 846] nor of the apparatus patent are limited to feeding the liquid through a plurality of orifices or points of separation obtained mechanically or structurally. And the claims not the drawings define the invention. *American Anode, Inc.* v. *Lee-Tex Rubber Products Corp.*, 7 Cir., 136 F. 2d 581. The variance in structure employed in the commercial atomizing head is not indicative that the commercial success enjoyed is not attributable to the method and apparatus patent. The revolving bell or rotating disk feeding the paint to the atomizing zone by centrifugal force is fully embraced within the general concepts of the invention and constitutes a mere improvement in the mechanics of presenting the liquid to the zone of atomization.

And what has been said in this connection on the subject of commercial success also disposes of plaintiff's contentions that because of the difference between the atomization heads shown in the drawings and those utilized in defendant's commercial system a fraud was practiced on the Patent Office in the representations made with respect to commercial success and that the alleged fraud is indicative of defendant's purpose "to monopolize wrongfully the entire field of electrostatic coating on false affidavits."

We find no merit in plaintiff's contention that the method claims fail to satisfy the requirements of the patent statute (35 U.S.C.A. §112) because they merely cite a desired result rather than the means for producing the same, and because of incompleteness due to failure to specify voltages, spacing, and liquids to which they are applicable. The process claims define the specific steps of procedure and the specifications being addressed to those skilled in the art (*Highway Appliance Co.* v. *American Concrete Expansion Joint Co.*, 7 Cir., 93 F. 2d 713) need not recite details. The pertinent portion of the statute provides:

> "An element in a claim for a combination may be expressed as a means or step for performing a speci-

fied function without the recital of structure, material, or acts in support thereof, and such claim shall be construed to cover the corresponding structure, material or acts described in the specification and equivalents thereof."

[fol. 847] There is no requirement that quantitative values for such factors as voltage, spacing and liquid characteristics be recited. The fact that experimentation or the exercise of judgment is necessary to adapt a patented process to particular material or to obtain the particular results desired does not impair validity of the patent. *Lever Bros. Co.* v. *Procter & Gamble Mfg. Co.*, 4 Cir., 139 F. 2d 633, 638-639.

Nor does the fact that there are liquid coating materials which cannot be used in an airless electrostatic spray-coating system make defendant's claims broader than its invention. The invention is not overclaimed in being directed broadly to liquid coating materials. The liquids are the materials upon which the process acts—not the active agent. Plaintiff's reliance on *Graver Tank & Manufacturing Co., Inc.* v. *Linde Air Products Co.*, 336 U.S. 271 is ill-placed. There the fluxes were claimed and included some inoperative to provide the desired feature. The method patent here involved does not purport to claim or extend to the liquid coating materials upon which it operates.

Plaintiff asserts that Claim 4 of the apparatus patent is invalid as constituting double patenting. Its argument is predicated upon the common disclosures of Claim 1 of the method patent and Claim 4 of the apparatus patent with respect to a plurality of points "spaced to form a substantially continuous extended atomizing zone" and being "sufficiently close together to permit the coating material to bridge the spaces therebetween" and defendant's witness Miller's testimony that "in order to form a continuous atomizing zone bridging is necessary so that you will get continuous and uniform feeding to the various atomizing points or sites." But it is entirely proper to cover the same disclosure by two patents co-pending, one for the method and the other for the apparatus. *General*

Tire & Rubber Co. v. *Fisk Rubber Corp.*, 6 Cir., 104 F. 2d 740, cert. den. 308 U.S. 581. Nor do the patents in suit involve double patenting of the subject matter of Ransburg patent No. 2,658,009. The latter covers a different feature, the use of an additional electrode to "shape" a spray, and in any event has a filing date later than the patents in suit.

[fol. 848] The amendment of Claim 4 in 1956, while the apparatus patent was pending, to include a reference to the "bridging" feature was not insertion of new matter in departure from the original applications in violation of 35 U.S.C.A. §132. The "bridging" was inherent in what the original applications disclosed. The District Court's findings as to the bridging feature are supported by the record. There is evidence that the atomizing head utilizing spaced needles provided a series of gutters between adjacent needles fed with liquid through openings present between the contacting needles, the plate and the wall of the device; that liquid or paint in the gutters would divide between the droplets formed at the tip of the needles and in so doing form a continuous web or film bridging the space.

Muncie Gear Works, Inc. v. *Outboard Marine & Mfg. Co.*, 315 U.S. 759, 768, cited by plaintiff, is not applicable. In the instant case the original application disclosed the basis for the amended claim and there is no evidence of public use more than one year before the invention was first presented to the Patent Office.

Prior to the submission of the amendment to Claim 4 plaintiff had sent a drawing of its accused device to the defendant in connection with negotiations concerning licensing. The District Court's finding that the amendment to Claim 4 was not the result of any disclosure of plaintiff's device, but was an earlier and independent development is supported by the evidence.

Plaintiff's accused method and apparatus employ a stationary electrostatic emitter, the atomizing head of which has two coaxial concentric disks spaced about 0.007 inches apart, having a knife edge at each periphery, presented edgewise to the article. Liquid coating material or paint is supplied at a controlled rate near the center of the disks. It is formed into a film in the space between the

disks and flows outward to the periphery. A spacer or shim between the disks confines the liquid film to a portion of the disk circumference. At the periphery of the disk the field draws the edge of the film into a series of closely spaced cusps and atomizes finely-divided electrically charged particles from the tips of the cusps. The field disperses the atomized particles and deposits them on the grounded article. No mechanical means is provided for spacing the cusps.

[fol. 849] While in all the specific embodiments of the method and apparatus disclosed in the patents in suit the liquid emerges from the interior of the atomizing head through a plurality of orifices and is mechanically divided or concentrated into droplets from which the atomization takes place, the method claims are not limited to feeding the liquid through a plurality of orifices or to its concentration into droplets. Nor is Claim 4 of the apparatus patent limited to an atomizer which has a plurality of feed orifices or mechanical provisions for concentrating the liquid into droplets. The District Court's finding of infringement is supported by the testimony of defendant's expert witness concerning the features of the accused device as compared to the claims of the patents in suit. Plaintiff bases its case for non-infringement on the absence from its emitter of any physical or mechanical points. That argument fails because the claims in suit are not limited to a system including physical or mechanical points. Plaintiff's system employs the principle of the patents in suit, appropriates the substance of the invention as defined in the claims, does the same work in the same way, and accomplishes the same result. The slight change in form does not avoid infringement. The fact that there are structural differences between plaintiff's emitter and the heads specifically shown in the patents in suit is without significance in respect to infringement of the method patent. Infringement of a method patent is not dependent on the form of apparatus used. *Cochrane* v. *Deener*, 94 U.S. 780, 787-788. It is not material whether the means employed, the extended edge of the atomizer head, has physical points or is an uninterrupted edge.

On the patent branch of the case we conclude that the District Court's findings of fact are supported by the record, including expert testimony, and are not clearly erroneous. And, the District Court's conclusions of law with respect to validity and infringement are applications of correct legal criteria.

Plaintiff's cross-counterclaim alleged violation of Sections 1 and 2 of the Sherman Act (15 U.S.C.A. 1 and 2), and Section 3 of the Clayton Act (15 U.S.C.A. 14). Plaintiff's contention that the District Court erred in the dismissal of its cross-counterclaim is predicated on charges [fol. 850] that the District Court erroneously found and concluded that the defendant had not misused the patents in suit by reason of having combined licenses thereunder with leases of equipment and by not identifying the particular patents in the license agreements; that a cross-licensing agreement between defendant and another manufacturer was not for an unlawful purpose and its performance not a misuse of patents, nor in violation of the anti-trust law provisions, nor a damage to plaintiff; that a discontinued license-back provision in defendant's early license agreements did not constitute anti-trust law violation; and that patent procurement activities of the defendant did not violate the anti-trust law provisions.

On the record it had before it we cannot say there is clearly error in the District Court's finding and conclusion that plaintiff's domination of the airless electrostatic spraying system market is solely by virtue of the monopoly created by its patents and has not been extended or enlarged beyond its proper scope. The evidence supports a conclusion that plaintiff failed to establish that defendant has engaged in any activity beyond the exercise of rights incident to its patent monopoly.

The record establishes that defendant does not sell equipment outright nor has it licensed anyone to make and sell electrostatic spray coating systems. Although defendant offers license agreements containing a lease of equipment the leasing arrangement is not imposed as a condition of licensing and licenses are available without equipment being leased from the defendant. The combined license-lease arrangement was therefor not illegal nor a

misuse of patents under the Clayton Act. *Cf. Linde Air Products Co.* v. *Graver Tank & Mfg. Co.*, 7 Cir., 167 F. 2d 531, 539. Although the record discloses that customers preferred the license-lease arrangement it is not indicated that such preference was due to defendant's insistence. Nor did the evidence concerning the difference in consideration paid require a finding that it was a compelling factor. That defendant furnished replacement parts without additional charge where the licensee leased equipment does not, on the facts here involved, evidence a Clayton Act or other anti-trust law violation. *Cf. Stearns* v. *Tinker & Rasor*, 9 Cir., 252 F. 2d 589, 604. The monopoly of defendant's patents was not extended by the agreement to articles or supplies not covered by the patent.

[fol. 851] The license agreement does not identify specific patents but grants a right to use an identified process for coating particular items in accordance with a system identified by a drawing. No licensee pays for or receives any license under a patent not applicable to the system. The licenses are terminable by the customer on thirty days notice. It does not appear that any attempt is made to extend a patent monopoly beyond the life of the patent, nor is the issuance of a license to use the system covered by the patents in suit conditioned on the acceptance of licenses under unwanted patents. No prohibited "package licensing" is involved. *Apex Electrical Mfg. Co.* v. *Altorfer Bros. Co.*, 7 Cir., 238 F. 2d 867, 871; *Automatic Radio Mfg. Co. Inc.* v. *Hazeltine Research, Inc.*, 339 U.S. 827.

Defendant's cross-licensing agreement with Behr-Manning does not purport to embrace the patents in suit and the evidence establishes no direct damage to plaintiff's business or property as a result thereof. Relief under plaintiff's cross-counterclaim cannot be predicated on the cross-licensing agreement. *Blaski* v. *Inland Steel Company*, 7 Cir., 271 F. 2d 853, 854-5. It is unnecessary that we consider the specific findings made by the District Court as to its validity or effects otherwise.

Between 1951, when defendant began to market its No. 2 Process on a commercial scale, and 1955 the license agreement contained license-back provisions requiring that future inventions by the licensee pertaining to method

and apparatus for electrostatic atomization of liquids or to coating with electrostatically atomized liquids, be licensed to defendant royalty-free, on a nonexclusive basis, with the right to sub-license. The license-back provisions were eliminated from defendant's license forms in 1955. Defendant obtained no licenses from any of its licensees pursuant to the clause and the effect of the clause on the incentive of licensees to make improvements is purely conjectural. A license-back clause is not illegal *per se*. *Transparent-Wrap Machine Corp.* v. *Stokes & Smith Co.*, 329 U.S. 637. Unlike the situations condemned in *United States* v. *General Electric Co.*, 80 F. Supp. 989 and *United States* v. *General Electric Co.*, 82 F. Supp. 753 there is no wide-spread network of such agreements between competing companies affecting an entire industry.

[fol. 852] Plaintiff's contention that the representations made by defendant to the patent office in the procurement of the patents in suit were false has been considered in connection with the arguments addressed to the question of commercial success. It is apparent that the representations did not evidence a purpose to "monopolize wrongfully the entire field of electrostatic coating on false affidavits" in violation of anti-trust law prohibitions as urged by plaintiff.

Plaintiff asserts error based on the District Court's ruling excluding from evidence, on defendant's objection, a certified copy of a consent judgment in an action brought by the United States against the Behr-Manning Corporation and certain other manufacturers charged with conspiring by means of patent agreements to monopolize commerce in coated abrasives. This consent decree did not find or adjudicate that the agreement between defendant and Behr-Manning was a violation of anti-trust law or otherwise unlawful, and neither that agreement nor the defendant was involved in any way in that action. It was an agreed judgment not in any way binding on defendant. The defendant was neither a party nor a privy to the action. There was no error in rejecting the proffered decree.

The other claimed error relating to exclusion of evidence concerns the District Court's ruling in sustaining

defendant's objection to the admission of one answer in a deposition. The answer was a voluntary statement of the witness of a conclusion, and not being within the field of expert opinion by one qualified to testify in such field, was clearly not admissible. The ruling was not error.

The District Court's allowance of attorneys' fees to defendant is not predicated on any specific finding as to the basis for such an award. Allowance of such fees should find support in a specific finding as to the exceptional circumstances justifying the award. *Apex Electrical Mfg. Co.* v. *Altorfer Bros. Co.*, 7 Cir., 238 F. 2d 867, 874. From our review of the record we are of the opinion that the facts do not justify a conclusion that there is herein presented the "exceptional case" in which attorney's fees are allowable under 35 U.S.C.A. §285. Plaintiff has long been in the spray-painting equipment [fol. 853] business. The controversy which precipitated the action appears to have been *bona fide*. See *Anderson Company* v. *Sears, Roebuck and Co.*, 7 Cir., 265 F. 2d 755. Plaintiff's negotiation for a license and its reluctance to supply the accused device without an indemnification agreement from the prospective customer indicate only business prudence similar to that exercised by defendant in its original acquisition of certain patents and in obtaining the cross-licensing agreement with Behr-Manning. 'It was the defendant who converted the declaratory judgment proceeding into a patent infringement suit at a time when the whole basis of the infringement charge was a single unit built by plaintiff and used by it experimentally and for demonstration purposes, none having been sold by plaintiff. It is our conclusion that the District Court's allowance of attorneys' fees was, on the facts presented, an abuse of discretion.

Plaintiff filed a motion in this Court to vacate the District Court's judgment and remand the cause for consideration of newly discovered evidence in the form of two patents issued to defendant subsequent to the appeal to this Court. Plaintiff relies on the provisions of Rule 60 (b) of the Federal Rules of Civil Procedure (28 U. S. C. A.). The motion was taken with the case by order entered August 14, 1959.

When an appeal from a judgment is pending a motion under Rule 60 (b) for relief from the judgment because of newly discovered evidence, should be filed in the district court and that court should proceed to hear the motion. If the district court indicates that it will allow the motion the court of appeals should then be requested to remand the cause. This procedure was followed in *Zysset* v. *Popeil Bros. Inc.*, 7 Cir., 276 F. 2d 354 where we remanded for consideration of alleged newly discovered evidence on the District Court's certification that there appeared to be sufficient cause at law to warrant reopening of its judgment pursuant to Rule 60 (b). See also *Ferrell* v. *Trailmobile, Inc.*, 5th Cir., 223 F. 2d 697, 698-9; *Smith* v. *Pollin*, D.C., 194 F. 2d 349, 350 and 7 Moore's Federal Practice, 2d Ed. 336, Par. 60.30 (2).

Apart from the fact that plaintiff's motion is not properly addressed to this court it is predicated upon arguments with respect to the scope of the claims in suit similar [fol. 854] to those which we have found unsound in considering plaintiff's appeal. The subsequently issued patents cover the commercial form of the defendant's equipment. Their validity is not here in issue. They are at most improvements on the patents in suit. The evidence relied upon as newly discovered would not in our opinion have affected the judgment of the District Court.

The judgment of the District Court is affirmed in all respects except insofar as it allows attorneys' fees to defendant. It is reversed as to the allowance of attorneys' fees.

AFFIRMED IN PART AND REVERSED IN PART.

[fol. 855]

IN UNITED STATES COURT OF APPEALS

FOR THE SEVENTH CIRCUIT

Before Hon. Elmer J. Schnackenberg, Circuit Judge; Hon. Wm. G. Knoch, Circuit Judge; Hon. Latham Castle, Circuit Judge.

No. 12737

BINKS MANUFACTURING COMPANY, etc., Plaintiff-Appellant,

vs.

RANSBURG ELECTRO-COATING CORPORATION, etc., Defendant-Appellee.

Appeal from the United States District Court for the Southern District of Indiana, Indianapolis Division.

JUDGMENT—July 27, 1960

This cause came on to be heard on the transcript of the record from the United States District Court for the Southern District of Indiana, Indianapolis Division, and was argued by counsel.

On consideration whereof, it is ordered and adjudged by this court that the judgment of the said District Court in this cause appealed from be, and the same is hereby, Affirmed, with costs, in all respects except insofar as it allows attorneys' fees to defendant. It is Reversed as to the allowance of attorneys' fees, in accordance with the opinion of this Court filed this day.

[fol. 856] Clerk's Certificate to foregoing transcript (omitted in printing).

[fol. 857]

SUPREME COURT OF THE UNITED STATES

No. 501, October Term, 1960

BINKS MANUFACTURING CO., Petitioner,

vs.

RANSBURG ELECTRO-COATING CORPORATION.

ORDER ALLOWING CERTIORARI—December 19, 1960

The petition herein for a writ of certiorari to the United States Court of Appeals for the Seventh Circuit is granted.

And it is further ordered that the duly certified copy of the transcript of the proceedings below which accompanied the petition shall be treated as though filed in response to such writ.

FILE COPY

Office-Supreme Court, U.
FILED
OCT 24 1960
JAMES R. BROWNING, C

IN THE

Supreme Court of the United States

OCTOBER TERM, 1960.

No. 501

BINKS MANUFACTURING COMPANY,
Petitioner,

vs.

RANSBURG ELECTRO-COATING CORPORATION,
Respondent.

PETITION FOR A WRIT OF CERTIORARI TO THE UNITED STATES COURT OF APPEALS FOR THE SEVENTH CIRCUIT.

CHARLES F. MERONI,
OTTO R. KRAUSE,
c/o HILL, SHERMAN, MERONI, GROSS & SIMPSON,
53 West Jackson Boulevard,
Chicago 4, Illinois,

W. DONALD MCSWEENEY,
c/o DALLSTREAM, SCHIFF, HARDIN, WAITE & DORSCHEL,
231 South La Salle Street,
Chicago 4, Illinois,
Attorneys for Petitioners.

THE BLAKEMORE-WARREN PRINTING COMPANY, CHICAGO

INDEX.

	PAGE
The Opinion Below	1
Jurisdiction	2
Statement of Questions for Review	2
Statutes Invoked	3
STATEMENT OF THE CASE	4
Pleadings in General	4
Plaintiff's Background and SK 661 Paint Applicator in Suit	4
Defendant's Background, Patent Acquisition and Leasing Program	5
Defendant's Initial or Prior Electrostatic Spray Processes	6
Defendant's Leased Commercial No. 2 Centrifugal Airless Type Process Which Uses a Rotating Bell or Disc	6
Agreements by Which Defendant Acquired Patent Rights From Possible Competitors	7
Defendant's Marketing Program	8
ARGUMENT	11
Question 1	11
Defendant's License-Lease Agreements Were Not Confined to Particular Patents Nor for the Duration of Any Patent	15
Defendant's Coupled License and Lease Agreements Admittedly Embraced Unpatented Parts and Services	18

Defendant Since the Inception of Its Leasing Program Has Tied Patent Licenses to Equipment Leases; and Its 1953 Attempted Purge Was a Sham Contrived After It Had Already Dominated the Market With Existing Leases 21

Decision Below Is in Conflict With that of the Ninth Circuit 25

Question 2 26

Defendant's Package Licensing of Its Patents by the Subterfuge of Applicable Patents 26

Attempted Patent Block Booking Purge 28

Decision Below Conflicts With That of Third Circuit on Package Licensing 29

Question 3 31

Defendant at the Time of This Suit Had in Force in a Field Completely Dominated by It Over 130 License-Lease Agreements With License Back Provisions in Violation of the Anti-Trust Laws. 31

Question 4 37

Fraudulent Procurement of Starkey et al. Patents, Pending Over Ten Years, Was Part of Defendant's Illegal Monopoly of Market in Restraint of Trade 37

CONCLUSION 41

TABLE OF AUTHORITIES.

American Security Company v. Shatterproof Glass Corp., 268 F. 2d 769, 777 (1959) 29

American Tobacco Company v. United States, 147 F. 2d 93, 106, 107, 120; aff'd 328 U. S. 781 (1944) 25

Barber Asphalt Corporation et al. v. La Fera Grecco Contracting Co. et al., 116 F. 2d 211, 215 (3rd Cir. 1940) 24

Hartford Empire Co. v. United States, 323 U. S. 386, 449; 324 U. S. 570 (1945) 13, 24, 36

Hazel-Atlas Co. v. Hartford Co., 322 U. S. 238, 250 (1944) 40

International Salt Co. v. United States, 332 U. S. 392 (1947) 15, 17

Kellogg Co. v. National Biscuit Co., 71 F. 2d 662, 666 (1934) 40

Keystone Driller Co. v. General Excavator Co., 290 U. S. 240, 246 (1933) 40

Leitch Mfg. Co. v. Barber Co., 302 U. S. 458, 463 (1938) 19

Northern Pacific Railway Co. v. United States, 356 U. S. 1, 9, 10 (1958) 15, 17

Oxford Varnish Corp. et al. v. Ault & Wiborg Corp., 83 F. 2d 764, 766 (1936) 12

Precision Co. v. Automotive Co., 324 U. S. 806, 815, 816, 819 (1945) 40

Stearns v. Tinker & Rasor, 252 F. 2d 589, 603 (C. A. 1957) 25

Transparent-Wrap Machine Corp. v. Stokes & Smith Co., 329 U. S. 637, 646-8 (1947) 34-36

U. S. v. General Electric Company, 80 F. Supp. 989, 1006 (D. C., S. D. New York 1948) 14, 35
U. S. v. General Electric Company, 82 F. Supp. 753, 816 (D. C., N. J. 1949) 14, 35
U. S. v. Line Material Company, 333 U. S. 287 (1948) .. 14
U. S. v. New Wrinkle, Inc., 342 U. S. 371 (1952) 14
United States v. Patten, 226 U. S. 525, 544 (1913) 25
United States Shoe Machinery Corp. et al. v. United States, 258 U. S. 451, 457 (1922) 25
U. S. v. U. S. Gypsum Co., 333 U. S. 364, 396 (1948) 14

IN THE

Supreme Court of the United States

OCTOBER TERM, 1960.

No.

BINKS MANUFACTURING COMPANY,
Petitioner,

vs.

RANSBURG ELECTRO-COATING CORPORATION,
Respondent.

PETITION FOR A WRIT OF CERTIORARI TO THE UNITED STATES COURT OF APPEALS FOR THE SEVENTH CIRCUIT.

Petitioner, Binks Manufacturing Company, prays that a Writ of Certiorari issue to review the judgment of the United States Court of Appeals for the Seventh Circuit entered in the above entitled case on July 27, 1960.

THE OPINION BELOW.

The Opinion of the United States Court of Appeals for the Seventh Circuit is reported at 281 F. 2d 252 and perti-

nent portions are printed in the Appendix to this Petition (Pet. App. 1-8).*

JURISDICTION.

The Judgment of the United States Court of Appeals for the Seventh Circuit was entered on July 27, 1960. The jurisdiction of this court is invoked under 28 U. S. C., Section 1254(1).

STATEMENT OF QUESTIONS FOR REVIEW.

1. Can a patent owner, dominating an industry, tie in with a patent license* an equipment lease requiring patent licensees, in the fees charged, to pay for unpatented staple articles or commodities and for services?

2. Can a patent owner, dominating an industry, in leasing equipment require the lessee to take a license under a package of unwanted patents?

3. Can a patent owner, dominating an industry, in leasing equipment require lessees, in outstanding tied-in patent licenses, to grant back free licenses on "any inventions, improvements, or letters patent, domestic or foreign, comprehending subject matter usable in any way in connection" with unpatented subject matter?

4. Is a patent owner dominating an industry in leasing

---

* P.A. designates Plaintiff's Appendix below.
D.A. designates Defendant's Appendix below.
Pet. App. designates Petition Appendix accompanying the Petition.
R.A. designates Defendant's Answers to Plaintiff's Requests for Admissions.
Int. designates Defendant's Answers to Plaintiff's Interrogatories.
Pertinent R.A. and Int. are printed in the Petition Appendix.

* See appended admissions of Defendant in answers to Plaintiff's Request for Admissions and Interrogatories, which in themselves outline the program. (pages 9 thru 50)

equipment under licensed letters patent, fraudulently procured from the Patent Office, barred from enforcement of such patents?

STATUTES INVOKED.

The statutory provisions of the anti-trust laws here involved are 15 U. S. C. Sections 1, 2, 14, 15, and 26; and the provision of the patent laws is 28 U. S. C. Section 1338, all of which are printed at pages 9-11 in the accompanying Petition Appendix.

STATEMENT OF THE CASE.

PLEADINGS IN GENERAL.

This suit was commenced on October 11, 1956 by Plaintiff's filing an action for Declaratory Judgment, but in view of Defendant's counterclaim charging Plaintiff with patent infringement (28 U. S. C. § 1338(a)), Plaintiff's complaint, on its motion, was dismissed. Plaintiff thereupon filed a cross-counterclaim charging Defendant with unfair competition in violation of the Anti-Trust Laws, and misuse of patents (15 U. S. C. §§ 1, 2, 14, 15 and 26; 28 U. S. C. § 1338). On order of the Court, substitute pleadings (P.A. 1-45) including all amendments were filed. The basis for federal jurisdiction in the court of first instance was the foregoing Statutes.

PLAINTIFF'S BACKGROUND AND SK 661 PAINT APPLICATOR IN SUIT.

Plaintiff has been in the spray painting supply business since before the turn of the century, and sells directly to customers such catalogue items as spray guns, and allied equipment for the spray coating field.

In collaboration with Midwest Research Institute (P.A. 673), Plaintiff developed a simple electrostatic liquid spraying device or applicator (P.A. 711, 952-4). This applicator or emitter (SK 661 (P.A. 905)) here in suit (as stipulated by the parties (P.A. 233)) consists of two integral concentric spaced stationary disks at the outer edge of which liquid freely emerges from between the disks (R.A. 34 (P.A. 199)) to be atomized by an electrostatic field.

In the course of correspondence (P.A. 894 through 911) between the parties, in which Plaintiff inquired if Defendant had any license forms on the basis of a single royalty for each sale of emitter (SK 661), Defendant in its last letter (P.A. 911) advised Plaintiff it could not license on any other basis than that one on which the royalties were based upon the usage by the customer of coating material passing through the licensed spray equipment. Also, in its answer to R.A. 10 (P.A. 195), Defendant admitted it notified Plaintiff not to sell its SK-661 emitter or sprayer *"for electrostatic coating to any party who was not a licensee of Defendant."* Defendant's hundreds of licensees had already in every instance leased Defendant's equipment (P.A. 196) under agreements by which Defendant furnished all replacements and repairs (P.A. 201-2) and Plaintiff was thus foreclosed from entering this market.

DEFENDANT'S BACKGROUND, PATENT ACQUISITION AND LEASING PROGRAM.

Defendant's predecessor was initially a small Indiana concern engaged in the business of selling kitchenware such as canisters, bread boxes, and the like. However, for over 15 years, beginning in 1942 (P.A. 762), Defendant and its predecessor have been engaged in acquiring adversely owned patents or patent rights, and granting *patent licenses, coupled in every instance with leases* of its equipment for electrostatic spray coating systems. It has grown to a size wherein it is the only supplier of airless electrostatic spraying systems (P.A. 47), and now collects rental fees in excess of 3 million dollars a year (Int. 85 (P.A. 58)).

DEFENDANT'S INITIAL OR PRIOR ELECTROSTATIC SPRAY PROCESSES.

The spray coating system first licensed and leased in 1944 by the predecessor Ransburg partnership was known as the *No. 1* process (Px.-EEEE, P.A. 854); and which is covered by expired Pugh Patent No. 1,855,869 (P.A. 1073), acquired in 1943 by Defendant from Western Electric Co. (P.A. 762). It consists basically in employing an electrostatic field for depositing liquid particles delivered or sprayed into the field by a conventional air spray gun. Defendant admits that in this prior art process electrostatic atomization of the liquid occurred (P.A. 204).

The Defendant also marketed a process known as "*electrostatic detearing*" which like its No. 1 process is also prior art with respect to Defendant's Starkey *et al.* method and apparatus patents Nos. 2,685,536 and 2,794,417 here in suit (P.A. 1021-1037) (R.A. 61(a), (P.A. 202)). Detearing is a process (P.A. 857) in which articles having a wet coating are subjected to the action of an electrostatic field which serves to pull off or "detear" excess portions of the wet coating. The technique of electrostatic detearing is described in Gravley United States Patent No. 2,359,476 (P.A. 1115), acquired by Defendant in 1943 by assignment from The Brush Development Company (P.A. 765).

DEFENDANT'S LEASED COMMERCIAL NO. 2 CENTRIFUGAL AIRLESS TYPE PROCESS WHICH USES A ROTATING BELL OR DISC.

In Defendant's No. 2 electrostatic spraying system, licensed and leased as early as 1950, a rotating or centrifugal bell or disc (P.A. 877) is substituted for the air gun of the No. 1 system. This disc or bell rotating at 900 R.P.M., not only feeds the liquid to the one side of an

electrostatic field, but also performs an indispensable part in the atomization, dispersion and deposition of the liquid (P.A. 350-370). The evidence shows that Defendant's No. 2 system is inoperative without the use of centrifugal means in effecting atomizing and dispersion of liquid (P.A. 350). *Defendant in 1950-4 licensed and leased 171* (P.A. 51) *of its No. 2 systems before it had any patents covering same*; including the Starkey patents in suit.

The Defendant, in obtaining its Starkey *et al.* patents in suit, represented the leasing of its No. 2 centrifugal bell or disc system as constituting commercial success of the subject of such patents. The No. 2 system did not effect atomization and dispersion of liquid *solely* by the electrostatic field (P.A. 350-370) as was urged to be the *"heart"* of the Starkey *et al.* inventions (Pet. App. Pages 74-75).

AGREEMENTS BY WHICH DEFENDANT ACQUIRED PATENT RIGHTS FROM POSSIBLE COMPETITORS.

In September, 1944, the Ransburg partnership entered into an agreement with Behr-Manning Corporation (P.A. 771) in which it gave exclusive rights under the aforesaid Pugh patent No. 1,855,869 (P.A. 1073) (which it had by then acquired from Western Electric Co. (P.A. 762), and other patents in the field of spraying *solid particles*, such as abrasives, flocking or fiber shaped particles) to Behr-Manning in exchange for an exclusive license under thirty-eight patents and applications (then owned by Behr-Manning) for the field of electrostatic spraying of *liquid particles*. This agreement *divided up the field* between these two concerns.

In October of 1948, Defendant entered into an agreement with the Research Corporation of New York (Px.-VV, P.A. 779) by which Defendant received exclusive rights

under two additional United States patents dealing with electrostatic deposition processes. In addition, Defendant acquired the aforesaid Gravley patent No. 2,359,476 (P.A. 1113) from The Brush Development Company in an instrument dated May 3, 1943 (Px.-TT, P.A. 765).

In Defendant's answer to Request for Admission 58 (P.A. 202) the Defendant admits:

> "that in no instance where it has acquired patent rights from other parties has any of such parties gone into competition with Defendant in the electrostatic liquid spraying field."

DEFENDANT'S MARKETING PROGRAM.

Since its entry into the field of licensing electrostatic spray coating processes, Defendant has used a combined patent licensing and equipment leasing arrangement (P.A. 114-151). The Defendant does not sell equipment to users (R.A.-1 (P.A. 194)). It collects its fees from a combination of the following charges: (1) an initial fee of $5,000 to $40,000 (R.A. 38, (P.A. 200)) which is payable to Defendant upon installation of the leased equipment and *completely pays for the equipment* (Int. 10, (P.A. 47)); (2) a minimum monthly fee or (3) a percentage of the cost of coating material which passes through Defendant's equipment per month, if this sum is greater than the minimum fee provided in (2). On the basis of these fees, Defendant collects millions of dollars a year (Int.-85, 86 (P.A. 58)), from some of the largest industrial concerns in the United States (Ex. B in answer to Int.-3(c), (P.A. 85)).

During an early portion of this suit, the total number of Defendant's licensees was *732* (Int.-3(a), (P.A. 46)). *All* of the more than *300* "No. 2" licensees of Defendant have leased Defendant's equipment (R.A. 17 (P.A. 196)).

The contracts between Defendant and its licensees are prepared by Defendant and are normally in printed form (R.A. 44, 45 (P.A. 201)). The terms of the Defendant's licenses have not varied substantially from the outset of leasing of the No. 1 process to the present day leasing of both the No. 1 and the No. 2 processes (Int. 170 (P.A. 74)).

Defendant in its agreements (P.A. 114) represents that it is the owner of or otherwise has the right to grant licenses under applicable inventions and letters patent. Where Defendant was requested by the licensee, as in the example of the Avco agreement (P.A. 886), to list applicable patents, it listed *a large package of patents even though none applied to the leased equipment* (R.A. 90(b), (P.A. 211)).

Defendant retains title (R.A. 71 (P.A. 205)) in and reserves the right to make changes in the equipment it supplies, and for which it is fully paid by the initial fee; and in consideration of the required fees it agrees to supply replacement parts (*which include staple commodities*) (R.A. 54-55 (P.A. 202)), as well as to supply services. Defendant reserves the right to cancel without cause after three years. The contracts expressly disclaim any representation outside of the written instrument.

At the start of licensing of the No. 2 system, in 1950, Defendant included in its (R.A. 19, (P.A. 196)) agreements for the No. 2 system, a "Future Inventions" clause in which the user was obligated to license back to Defendant, royalty-free, with the *right to sub-license*, any inventions, improvements, or letters patent, domestic or *foreign*, from any source relating to methods and/or apparatus involving electrostatic atomization of liquids or the deposition of electrostatically atomized liquids. This requirement to license back thus *embraced all improvements on prior and unpatented electrostatic spraying sys-*

tems and further extended not only during the period of the agreement, but for two years thereafter.

Over *130* outstanding agreements containing such "Future Inventions" clauses *are still in force and effect*, although Defendant began in 1955 to use a new form of agreement without this clause.

In 1953, after the No. 1 process had been licensed for nine years and the No. 2 process had been licensed for several years, the Defendant sent letters to its then existing licensees (Px.-S, Z-1, P.A. 730, 731) advising them that licenses might be available from Defendant which would not involve rental of Defendant's equipment. To take advantage of this offer, the user would have to return all of the leased equipment to Defendant, *without refund* of any of the large initial fee (Px.-LLLL, P.A. 542) (covering the entire cost of the leased equipment) before proceeding to practice the licensed subject on the basis of a slight reduction in the minimum monthly fee. No licensee ever accepted the terms of this offer (Px.-LLLL, P.A. 539).

ARGUMENT.

QUESTION 1.

A patent owner, dominating an industry, cannot tie in with a patent license an equipment lease requiring patent licensees, in the fees charged, to pay for unpatented staple articles and services.

The decision of the Court of Appeals herein to the contrary is in conflict with applicable decisions of this Court, and of the Ninth Circuit in Stearns v. Tinker and Rasor 252 F. 2d 589 (1957).

Defendant Dominates the Field as There Are Admittedly No Other Suppliers, Replacement Part Dealers, Service and Maintenance Concerns and Secondhand Dealers.

Here, the tieing in with a patent license of an equipment lease is itself *per se* a violation of the anti-trust laws, but Defendant has gone much further than that in its illegal program of agreements which also tie in unpatented staple articles and services.

In the electrostatic spraying field, Defendant dominates a very substantial segment of the business. It admits that there are no others engaged in the manufacture and sale of airless electrostatic spraying equipment (P.A. 47), and that 66% of its users of its prior No. 1 air-type system have now replaced same with Defendant's airless No. 2 system (Int. 169 (P.A. 73)). Undisputed facts are evidenced by the following noted admissions and answers wherein Defendant admits:

> "that prior to the issuance of its process patent No. 2,685,536, as far as is known to defendant, it was the sole manufacturer and supplier in this country

of airless electrostatic spraying systems." (R.A. 41 (P.A. 200)).

"there was no airless electrostatic spray coating system on the market outside of those being marketed by defendant" and that "the only source, as far as defendant knew, for such systems was the defendant." (R.A. 85(a) and (b) (P.A. 210)).

"as far as it knows there are no secondhand dealers in the United States handling electrostatic airless spray coating systems." (R.A. 51 (P.A. 201)).

"as far as it knows there is no servicing organization in the United States outside of itself for servicing its so-called No. 2 airless electrostatic coating system." (R.A. 52 (P.A. 201)).

"as a part of its patent licensing and leasing program, it renders engineering and technical services to its licensees," and also that it is compensated for same "from fees paid by licensees." (Int. 11(a) (P.A. 47)).

It or anyone else has not "sold or offered for sale any secondhand or used equipment of Defendant for airless electrostatic spray coating." (Int. 89 (a) (P.A. 59)).

"in connection with its licensing and leasing program on airless electrostatic spraying systems it usually, as a part of the fees received by it, for the most part supplies the majority of replacement parts on the equipment furnished by the defendant to its licensees." (R.A. 54 (P.A. 202)).

Under the anti-trust laws, it is not necessary that it be shown that Defendant dominated the industry as to all forms of painting, as was properly held in *Oxford Varnish Corporation et al. v. Ault & Wiborg Corporation*, 83 F. 2d 764-766 (1936). "The ratio borne by Defendant's volume of business to the paint and varnish industry is not, we think, the measure by which monopolistic tendency of its contracts is to be determined." • • • "*Competitors may not negotiate with its licensees on an*

equal trading basis—they are wholly and completely shut out." (Emphasis ours.)

Here, as admitted in answer to Interrogatory 3 (P.A. 46), Defendant at the date of the filing of the complaint herein had granted *732* license-leases, and of which *463* were still in force and effect. (Int. 169 (P.A. 73)). Reference to the Exhibit "B" attached to and comprising part of the answer to Interrogatory 3 (P.A. 85-112) reveals a very formidable list of the largest industries in the country, which are dependent solely upon Defendant for all equipment, parts and services in the airless electrostatic spraying field. Also, as noted from Defendant's list Exhibit M (P.A. 193), even ammunition, projectiles, etc., supplied to the United States Government by numerous concerns fully come within the scope of the market dominated by Defendant.

Defendant's dominant position in the industry was established by its program of acquiring patent rights from possible competitors, as distinguished from its own research. Contributing, significantly, to this dominance of the market was Defendant's cross license agreement with the Behr-Manning Corporation, which expressly and effectively divided the field of electrostatic spraying between them. (P.A. 171) contrary to the law of *Hartford Empire Co.* v. *U. S.*, 323 U. S. 386, 407 (1945). Further, Defendant admitted (R.A. 56 (P.A. 202)) that it included in its licenses such patent rights acquired from others.

The draft of the Behr-Manning cross license agreement was drawn up, and Defendant in its letter of November 13, 1944 (P.A. 869) in suggesting revisions said:

> "**Our greatest concern** and that to which we have given the **most thought and consideration** was the question of just how to word our future license agreements so that there could be no question in the minds

> of our users **that they were restricted from operating** in your fields, and still not create undue sales resistance for ourselves." (Emphasis ours.)

In reply, Behr-Manning in its letter of November 24, 1944 (P.A. 876-6a) said:

> "If this is the case and since no licenses have to your knowledge been granted in the flock or abrasive fields, we do not foresee difficulty or conflict with any of your existing licensees and it should not be difficult for you to **so limit your future licensees as to prohibit the employment of the patents** under which you have given us exclusive rights for abrasives and flock coated articles, in these fields." (Emphasis ours.)

Each party to the agreement had the right to sub-license others, and to bring suit for infringement on patents owned by it in its exclusive field. However, if a non-owner of a particular patent thought that its exclusive field was being invaded, the agreement specifically provided for such party bringing an action for infringement joining the owner of the patent as co-plaintiff. Each party, consequently, had substantial control over the patent rights of the other. This type of control, whether exercised or not, represents a conspiracy to monopolize or dominate a market in violation of the Sherman Act. *U. S.* v. *U. S. Gypsum Co.*, 333 U. S. 364; *U. S.* v. *Line Material Co.*, 333 U. S. 287; *U. S.* v. *New Wrinkle, Inc.*, 342 U. S. 371.

Further, Defendant admitted (R.A. 56 (P.A. 202)) that it included in its hundreds of license agreements such patent rights acquired from others. The network of agreements have thus of necessity affected an entire industry, in restraint of trade, as was condemned generally in *U. S.* v. *General Electric Co.*, 80 Fed. Supp. 989 (1948), and in *U. S.* v. *General Electric Co.*, 82 Fed. Supp. 753 (1949).

According to previous rulings of this Court, once it is shown that a licensor has a dominant position in the

market either by virtue of patents or otherwise, any tie-in agreements (such as equipment leases here) are *per se* a violation of both § 3 of the Clayton Act and § 1 of the Sherman Act, *International Salt Co.* v. *U. S.*, 332 U. S. 392 (1947); *Northern Pacific Railway Co.* v. *United States*, 356 U. S. 1 (1958).

Defendant's License-Lease Agreements Were Not Confined to Particular Patents Nor for the Duration of Any Patent.

In this regard the Court of Appeals said: "*Plaintiff failed to establish that Defendant has engaged in any activity beyond the license of rights incident to its patent monopoly.*" (Pet. App. 5.)

Nothing could be further from the truth, since for over four years prior to the issue of Defendant's allegedly basic Starkey and Ransburg method patent No. 2,685,536 on August 3, 1954 allegedly covering Defendant's No. 2 airless electrostatic system, Defendant admittedly had no patent protection thereon, and had actually in that period issued *171 licenses* as to such No. 2 system beginning on March 21, 1949 (Int. 40 (P. A. 51)). Further Defendant admits (Int. 81(a) (P.A. 57)) that none of its licenses were confined to the life of any patent or patents.

Defendant's Vice President, Harold Ransburg, in charge of sales, testified on the matter of licenses not being under particular patents as follows (P.A. 481-2-3):

> "Q. I want to now read to you Interrogatory 52 and its answer and then ask you a question about it:
>
> 'Q. Has defendant ever submitted a license under its Starkey patent alone without an accompanying proposed agreement for furnishing of equipment by the defendant company?'
>
> And the answer was:
>
> 'A. Defendant has never submitted any license limited to the Starkey patent alone.'

Q. Would that be true of all of the airless electrostatic coating licenses and leases that your company has issued?

A. *I believe that we have never submitted a license under any specific single patent.*

Q. *Well, as a matter of fact, did you bother in your department to keep any record of what patents were applicable to each of the licenses as you granted them?*

A. *No, we did not.*

Q. *Did anybody keep any such record?*

A. *Not to my knowledge.*"

"Q. I would like to read you Admission No. 84 and the answer and then ask you a question, sir.

'84-A. Beginning around March 21, 1949 and for several years thereafter, defendant leased and licensed its No. 2 airless electrostatic coating systems without having issued to it any letters patent affording the defendant exclusive patent rights to airless electrostatic spray coating.' And the answer was admitted.

'Q. As far as you know, was that true of most of those *171 licenses* that we referred to a moment ago?'

'A. Yes.'"

Q. Now, I would like to read to you another admission and ask you a question about it.

'57. Does Defendant admit that in its licensing program on electrostatic spraying systems it has for the most part used printed forms of licenses which *do not single out any particular patents by numbers, of those in the portfolio of the defendant?*' And the answer was yes.

Q. Is that true of practically all your licenses?

A. *Yes.*" (Emphasis ours.)

Defendant's Department Head, Howarth, in charge of installation services and sales engineering testified (P.A. 605):

"Q. *But you never undertook in any way to spell out any patents that were applicable, did you?*

A. *No. I wouldn't have any idea of just which ones would be applicable or not.*

Q. In other words, you were able to go ahead and

consummate these licenses without having detailed knowledge as to what patents were applicable?

A. That's correct.

Q. And that was true of all your sales force, as far as you know?

A. I would think so, yes." (Emphasis ours.)

Defendant's Sales Engineer, Milton F. Pleva, also testified (P.A. 614, 615):

"Q. Well, do you in any of your contacts, say, on the No. 2 system, *ever have occasion to tell a customer what patents are applicable?*

A. Well, I couldn't do that because I don't know." (Emphasis ~~ours.~~)

Pleva further testified in connection with negotiations for a lease with Mr. Wallin of Webcor that the lease-license would go on indefinitely as there was no time limit to the agreement (P.A. 625):

"Q. But, in any event, you made it plain to him that even if he had the equipment for fifty years he'd still have to pay the monthly fee or the royalties?

A. Well, I don't think I specifically pointed that out, sir, because he knows that. I mean, that is in the agreement.

Q. *It goes on indefinitely?*

A. *Yes, sir.*

Q. *There is no time limit?*

A. *Yes, sir, that's right."* (Emphasis ours.)

Under the law, the Lower Court erred in justifying Defendant's tie-in of patent licenses with equipment leases in a field it dominated, irrespective of whether such equipment was covered by patents. *International Salt Co.* v. *United States*, 332 U. S. 392 (1947); *Northern Pac. Ry. Co.* v. *United States*, 356 U. S. 1, 9, 10 (1958).

Defendant's Coupled License and Lease Agreements Admittedly Embraced Unpatented Parts and Services.

The Court of Appeals (Pet. App.) erroneously concluded that "The monopoly of defendant's patents was not extended by agreement to articles or supplies not covered by the patent."

In its answer to Plaintiff's Interrogatory 33 (P.A. 50), Defendant submitted Exhibit E (P.A. 152, 177) showing what type of its 45 forms of agreement, and which type of electrostatic system each of its 732 licensees had. In its answer to Interrogatory 36 (P.A. 50), Defendant submitted the attached *Exhibit G* (P.A. 182, 183) as showing a typical example of equipment furnished under its license-lease agreements.

Defendant's typical list of parts, *Exhibit G*, on its face clearly evidences the fact that unpatented parts were supplied by defendant under its license-lease agreements. Certainly, items such as **switches, alarm bell, cable, wire, oil hose, tubing, hose fittings, terminal puller, snap rings, pliers, tube pullers and spare electrical tubes** are all unpatented staple parts or conventional commodities as far as Defendant's process and system patents are concerned. Yet, customers, as part of a package deal, were forced to pay for such parts in order to get the license and lease; and there is no question about this in view of Defendant's admission that the aforesaid Exhibit G was typical of the equipment furnished under its lease agreements.

As to this matter of parts, Mr. Wallin of Defendant's *licensee* Webcor, said (P.A. 645-6):

> "Q. Have you ever had to acquire any replacement parts?
>
> A. No. All the parts in the equipment are covered by our charge.

Q. Well, I mean, has Ransburg from time to time furnished additional parts?

A. Oh, yes.

Q. You haven't gone out on the outside and bought any parts?

A. No, no.

Q. You considered that was all included in the contract?

A. That's right. **We even get hoses, connecting wires. The lead-in cable will break down, and that is furnished.**

Q. Well, you could buy that on the outside, if you wanted it?

A. We could, but why should we when we are paying for it.

Q. **So to that extent it has cut down the amount of business you have had to transact with outsiders as far as these parts are concerned, is that right? I mean third parties, people besides yourself and Ransburg. You haven't had to go out and buy anything from other people?**

A. For this particular equipment, you mean?

Q. Yes, yes.

A. The No. 2 equipment?

Q. Yes.

A. No, we don't buy anything for the No. 2 for their part of the equipment. There are other parts, the paint supply and stuff, which we still buy outside.

Q. But nothing for the equipment that they furnished?

A. No, we don't buy anything." (Emphasis ours.)

Also, according to its answer to Interrogatory 11 (P.A. 47), Defendant also supplies all technical and engineering services as a part of the fees paid by each licensee.

This Court in relying on its decision in the case of *Carbice Corporation* v. *American Patents Development Corp.* (1931), 283 U. S. 27, said in *Leitch Mfg. Co.* v. *Barber Co.*, 302 U. S. 458, 463 (1938):

"The distinction upon which The Barber Company

thus rests is without legal significance. The Court held in the *Carbice* case that the limitation upon the scope or use of the patent which it applied was 'inherent in the patent grant.' It denied relief, not because there was a contract or notice held to be inoperative, but on the broad ground that the owner of the patent monopoly, ignoring the limitation 'inherent in the patent grant', *sought by its method of doing business to extend the monopoly to unpatented material used in practicing the invention.* By the rule there declared every use of a patent as a means of obtaining a limited monopoly of unpatented material is prohibited. *It applies whether the patent be for a machine, a product, or a process. It applies whatever the nature of the device by which the owner of the patent seeks to effect such unauthorized extension of the monopoly. Nothing in Leeds & Catlin Co.* v. *Victor Talking Machine Co., 213 U. S. 325, limits it.*'" (Emphasis ours.)

Defendant here under the guise of a patent license (but not under any spelled out patents) to use its coating system was successful in getting over 700 licensees to lease equipment from it which in every instance included a large number of unpatented commodities, and replacements thereof as well as all services. It necessarily stifled competition as to such staple commodities, since the price paid by its licensees was inclusive as to such commodities, and there was no reason why its licensees should acquire such commodities elsewhere when they had to pay for them anyway as a part of Defendant's package deal.

Defendant Since the Inception of Its Leasing Program Has Tied Patent Licenses to Equipment Leases; and Its 1953 Attempted Purge Was a Sham Contrived After It Had Already Dominated the Market With Existing Leases.

Since the commencement of licensing on electrostatic spraying in 1944, Defendant has employed a leasing system which, in its basic essentials, has remained intact (Int. 170 (P.A. 74)). Typical forms of agreement that were admittedly used by Defendant (R.A. 45 (P.A. 201)) are to be found at P.A. 114-151. Each of these agreements entered into by Defendant contained a provision to the effect that such agreement sets forth the entire agreement including all warranties.

In each instance, the Defendant prepares the license and lease and submits it to the prospective licensees (R.A. 44 (P.A. 201)). These licensing and leasing forms are not submitted for or on behalf of any particular licensee (R.A. 45 (P.A. 201)). Defendant does not sell any equipment to users (R.A. 1 (P.A. 194)). Also there is no dispute here about Defendant having always joined or tied with its patent licenses equipment leases, as is evident from the following:

Defendant admits (R.A. 71 (P.A. 205)), that "in granting its licenses in the airless electrostatic coating field it has not only granted licenses under its letters patent in suit, but has also joined with such licenses leases for equipment furnished by the defendant and has at all times maintained title to all equipment it has furnished its licensees under its agreements with them and in no case prior to the filing of this suit has it ever actually granted a license without the license being accompanied by a lease of equipment."

Defendant's wrongfully tied in patent licensing and

equipment leasing program was so completely established by Defendant by 1944 that the momentum thereof was carried over into the licensing and leasing of its No. 2 system beginning in 1950 (Int. 85 and 86 (P.A. 58)). Defendant's Vice President, Harold Ransburg, testified (P.A. 433) that Defendant was established in the electrostatic coating field and was able to take advantage of the momentum afforded by its establishment in that field. Also, at page P.A. 610, Mr. Howarth testified that since the filing of this suit in 1956, Defendant has pursued without change the same leasing program that it had before the suit was filed.

In 1953, Defendant, apparently concerned with the anti-trust aspects of this unequivocal tie-in, attempted to pay lip service to the anti-trust laws by notifying licensees that Defendant would be willing to license under the process alone, at a slightly reduced monthly fee, if the licensee would return all Defendant's leased equipment to it. There was to be no return of the initial fee of thousands of dollars ($5,000 to $40,000, R.A. 38 (P.A. 200)) which the licensee had paid to the Defendant at the time of installation (P.A. 542). Such fee had admittedly fully compensated Defendant for all of its costs on such equipment (Int. 10, (P.A. 47)). Typical form letters, (P.A. 542, 546-547) offering this proposed modification will be found on pages P.A. 730 and 731.

As indicative of the fact that it was recognized that this form letter had been adopted in an effort to circumvent the anti-trust laws, one licensee, Altex Corporation (P.A. 546), wrote Defendant on July 28, 1953 as follows:

> " 'The letter *proposes a change of contract no doubt to conform with precedent set up recently in the Patent Courts*, but since the expression in your letter is oversimplified, we would appreciate your sending us a rough draft of the proposal you are making to others'." (Emphasis ours.)

In this respect, Harold Ransburg testified (P.A. 547, 548), that Defendant was concerned because of the "IBM situation".

No licensee ever took advantage of the offer allegedly expressed in these letters (R.A. 538-9-42 and 574). Defendant admittedly never did even to this day grant a license without tieing to it a lease of equipment (R.A. 44, R.A. 84(a), (b) (P.A. 201, 210)). At least one licensee, Webcor, branded the proposition "ridiculous" (P.A. 826). Defendant's own salesman, Pleva, in testifying about these form letters said (P.A. 464-5, P.A. 621), he could not give customers "any good answers" for them.

The best evidence of the existence or non-existence of an alternative plan under which a user could have a choice between taking the Defendant's equipment and not taking the Defendant's equipment is in the testimony of the licensees and the prospective licensees. *The only testimony derived from Defendant's customers and prospective customers was taken by Plaintiff on deposition. Defendant did not call any of its hundreds of licensees as witnesses. Prospective licensees, in their depositions taken by Plaintiff, testified that they had no knowledge of such an alternative* (P.A. 634, 636, 651).

The reason why Defendant, whose primary business was selling licenses (P.A. 539) did not call any of its own licensees as witnesses is evident from the following unequivocal statement by Defendant's Sales Manager, Howarth, (P.A. 574):

> "Q. I would take it then from your answer that as far as the airless No. 2 system is concerned *you know of no instance where your company granted a license and the licensee was permitted to use its own or someone else's airless electrostatic equipment.*
>
> A. That is right." (Emphasis ours.)

The obvious reason why no new licensee ever acted on

Defendant's proposed alternatives of its 1953 letters is that the concern taking the license would have to pay an arbitrary initial fee of forty percent of what it would have to pay if it took the equipment, and also it would not get the benefit of any replacements or engineering services (P.A. 599-600). (See Pricing Guide of July 15, 1953; (P.A. 860)).

Thus, the 1953 attempted purge by the Defendant was merely window dressing contrived expressly in an effort to circumvent the anti-trust laws, *Barber Asphalt Corp., et al.* v. *La Fera Grecco Contracting Co. et al.*, 116 F. 2d 211, 215 (3rd Circuit 1940).

Below a point was made that Defendant's licensees could cancel the agreements on 30 days' notice. The Court, however, ignored the fact that any licensee cancelling the agreement would also cancel the lease coupled thereto. Thus, there was an economic deterrent to cancelling the license as the licensee would lose all of its substantial initial investment of thousands of dollars (P.A. 542) covering the entire cost of the leased equipment.

Further, the Court below ignored the fact that Defendant had a powerful club to force licensees in line, in that Defendant could after three years (P.A. 118), cancel the agreement for any reason at all no matter how arbitrary.

In *Hartford Empire Co.* v. *U. S.*, 323 U. S. 386, 449 (1945), the Court aptly characterized as illegal leasing agreements of the character here involved when it said:

> "The leasing of patented machinery or instruments lends itself particularly to the creation and maintenance of monopoly and to the extension of monopolistic effects far beyond the life and scope of the controlling patent or patents."

The Defendant's licensing operations must be viewed in their entirety, and not by way of piecemeal examination

of the component parts as was done by the lower Courts herein. *American Tobacco Co.* v. *U. S.*, 147 F. 2d 93, 106, 107 (C. A. 6, 1944); Aff'd 328 U. S. 781. *United States* v. *Patten*, 226 U. S. 525, 544 (1913).

It is, of course, *unnecessary* that the agreement complained of contain an expressed restraint of trade in order to constitute a violation of the Clayton Act since "*the actual realistic effect on competition is important.*" Such law is well established by the United States Supreme Court in the case of *United States Shoe Machinery Corporation et al.* v. *United States*, 258 U. S. 451, 457 (1922).

Decision Below Is in Conflict With That of the Ninth Circuit.

With a closely parallel fact situation, the Court of Appeals for the Ninth Circuit in 1957 decided the case of *Stearns* v. *Tinker and Rasor*, 252 F. 2d 589 (C. A. 9, 1957). That case involved a patent licensing arrangement under which the patent owner leased equipment including a high voltage power supply and other unpatentable parts. The evidence shows that the patented component of the combination constituted about 10% of the cost of the entire system. In finding this lease arrangement a violation of the Clayton Act, the Court held, at page 603:

> "Here, the lease requires the taking of both patented and unpatented parts, which of necessity has the actual realistic effect of restricting competition in the unpatented part."

QUESTION 2.

A patent owner, dominating an industry, in leasing equipment, cannot require the lessee to take a license under a package of unwanted patents.

The decision of the Court of Appeals herein, to the contrary, is in conflict with the 1959 decision of the 3rd Circuit in the case of American Securit Company v. Shatterproof Glass Corp., 268 F. 2d 769, 777 (1959), and this important question of law has not been settled by this Court.

Defendant's Package Licensing of Its Patents by the Subterfuge of Applicable Patents.

Defendant's position, adopted by the lower Courts, is that it merely licenses its leased or rented equipment under applicable patents and that this was not the same thing as a package license or block booking of patents. In so doing, the Courts ignored completely the *realistic effect* of Defendant's program in monopolizing the market. *The evil of block booking is that it enables a group of monopolies, whether by patents or otherwise, to be employed in such a cumulative manner that the ultimate monopoly projected on the public is greater than the sum total of the individual monopolies.*

If Defendant's position was well-founded in law, all an owner of a large group of patents would have to do in licensing them as a package would be not to list or spell out the patents licensed, and to specify merely that the license was under all patents licensor considered applicable. This would force the licensee to recognize the validity of any patents of a large group that the licensor might at any time arbitrarily indicate were applicable.

In one instance, where a licensee, Avco Manufacturing

Company was able to get *Defendant to list its patents in the agreement itself* (Pl. Ex. XXXX, P.A. 886-89), Defendant admitted that none of the 36 patents listed "covered the No. 2 system leased and licensed to Avco Manufacturing Company." This Avco-Crosley license-lease agreement is still in force and effect as shown by Exhibit E (P.A. 154) submitted by Defendant in its answer to Interrogatory 33 (P.A. 50).

According to Exhibit F (P.A. 178-181) prepared by Defendant in its response to Plaintiff's Interrogatory No. 34 (P.A. 50), Defendant, in addition to the Avco agreements, also *granted license-lease agreements to six other large companies wherein it similarly listed a large number of patents as noted, i.e.*, E. I. Dupont De Nemours & Co., Dunham Mfg. Corp., Gibson Refrigerator Co., Hoffman Mfg. Co., Scott Paper Co., and Stant Mfg. Co.

Reference to the list (P.A. 152) of form of licenses, Exhibit E, granted by Defendant, and which was submitted by Defendant as part of its answer to Interrogatory 33, reveals that the Avco Airless No. 2 system agreement was form of agreement D29 (P.A. 137). The first "Whereas" clause of this agreement was deliberately amended by letter of agreement dated January 18, 1954 (Pl. Ex. XXXX, P. A. 886) to include the 36 patents listed in Exhibit B (P.A. 891) as covering the leased "Process" even though as now admitted by Defendant, (R.A. 90(b), (P.A. 211)), none were applicable or covered the licensed process.

The fact that this was done deliberately is evident from the following testimony of Harold Ransburg, Vice President in charge of sales (P.A. 475-6):

> "Q. (Interposing.) *Were you aware of the fact at that time you did not have a single patent on airless atomization that was applicable to the installation that*

was involved in this agreement of Plaintiff's Exhibit XXXX? Were you aware of that fact?

A. What is the date of that letter?

Q. January 18, 1954.

A. *Yes, I am aware of that.*" (Emphasis ours.)

Attempted Patent Block Booking Purge.

Just before the trial in December, 1958, the Defendant attempted unsuccessfully by correspondence in October, 1958 (Def's Ex. 41, Pages 965, 6, 7) to *purge itself* of its wrongdoing in its aforesaid agreement with Avco. In its reply of October 7, 1958 (P.A. 966), Avco's counsel Redfield said:

> "Your letter of October 1 puzzles me. I have a note in my file indicating that I had insisted, probably at our conference on January 6, 1954, that the first 'Whereas' clause specify the patents and applications covering the No. 2 process so as to tie down the term 'said process' as used in the agreement to what is described and claimed in the patents. *Apparently what was done was to include a general list of all patents you owned in Exhibit A, which was not responsive to my request.*" (Emphasis ours.)

Defendant thus effectively extended the monopoly it had in such patents so as to embrace a Process and system not in any way covered by its patents; and its attempted belated purge many years after the execution of the agreement did nothing toward dissipating the effects of its wrongdoing.

Thus, contrary to the lower Courts' findings, Defendant in some 7 of its lease-license agreements, did list patents, but more important it is apparent it was Defendant's practice, (especially, as evidenced by the Avco amended agreement (P.A. 891)) to block book patents that were not even applicable. This was well calculated to and did overwhelm the field into recognizing in bulk Defendant's patents; and thus, in effect, extended Defendant's monopoly beyond the scope of such patents.

Decision Below Conflicts With That of Third Circuit on Package Licensing.

The decision below as to package licensing is in direct conflict with that of the recent 1959 decision of the Third Circuit in the case of *American Securit Co.* v. *Shatterproof Glass Corp.*, 268 F. 2d 769 (1959). Moreover, this question of package licensing or block booking of patents, as such, has not been specifically settled by this Court. In the *Securit* case the Court said at page 777:

> "Whatever may be the asserted reason or justification of the patent owner, if he compels a licensee to accept a package of patents or none at all, *he employs one patent as a lever to compel the acceptance of a license under another.* Equity will not countenance such a result. We conclude that the court below committed no error in finding that the defense of misuse asserted by Shatterproof is a valid one." (Emphasis ours.)
>
> "We conclude also, and quite apart from all of the foregoing, that Paragraph 8(a) of Securit's Standard Licensing Agreement which provides that that agreement shall continue 'in full force and effect to the expiration of the last to expire of any' of Securit's patents set out in 'Schedule A' *constitutes a patent misuse for it extends the payment of royalties of patents under patents which may expire to the expiration date of that patent most recently granted to Securit.* Indeed the expiration clause of the contract works an 'aggravating hardship' on the licensee as Judge Leahy stated, in that it demands the renunciation of all patents, whether wanted or unwanted under the license." (Emphasis ours.)

In the instant case, Defendant package licensed its patents by specifically listing its patents in at least seven agreements, noted above, even though such patents were not applicable and, hence, unwanted. It showed by this pattern that when it licensed under applicable patents it meant thereby a package of its patents, regardless of

whether they covered the licensed process or system. This is clearly established by its wrongful and deceptive practice in the illustrative case of the aforesaid Avco Agreement. Thus, when Defendant in its licenses referred to applicable patents, it did not mean patents covering the licensed system, but rather all of its patents relating in any way to the electrostatic coating system irrespective of whether they covered such system or not.

Such a wrongful extension of its patent monopoly to unpatented leased equipment is clearly a violation of the antitrust laws; and it was so held in the *Securit* case. Moreover, in line with the *Securit* case, no license-lease of Defendant was restricted to the duration of any patent (Int. 81, (P.A. 57)), and actually its agreements went on indefinitely (P.A. 625).

Accordingly, it is urged that this Court should settle the matter of illegal usage of package licensing of patents on which the present decision of the Seventh Circuit is in conflict with that of the Third Circuit in the *Securit* case.

The Court of Appeals relied upon *Automatic Radio v. Hazeltine*, 339 U. S. 827, 831 (1950). This is not an authority for the proposition that block booking or package licensing of patents is legal. There the Supreme Court noted with approval at page 831, *United States v. Paramount Pictures*, 334 U. S. 131 (1948), but stated that it *was not considering the matter of package patent licensing because the point had not been pressed below, nor was there any evidence before the Court.* The rule of law in the *Securit* case declaring package licensing illegal was not previously passed upon in the *Hazeltine* case.

QUESTION 3.

A patent owner, dominating an industry, in leasing equipment, cannot require lessees in outstanding tied-in patent licenses to grant back free licenses on "any inventions, improvements or Letters Patent, domestic or foreign, comprehending subject matter usable in any way in connection" with unpatented subject matter. The decision of the Court of Appeals herein to the contrary is in conflict with applicable decisions of this Court, including Hartford Empire Co. v. U. S., 323 U. S. 386; 324 U. S. 570 (1945).

Defendant at the Time of This Suit Had in Force in a Field Completely Dominated by It Over 130 License-Lease Agreements With License Back Provisions in Violation of the Anti-Trust Laws.

Representative license forms D23, D25, D26 and D29 of Defendant reproduced in Plaintiff's Appendix all have license back provisions in paragraph 11 entitled "Future Inventions" (P.A. 120, 127, 135 and 143). As to the agreements containing such provisions, Defendant in its answer to Interrogatory 61 (P.A. 53) listed its forms D-23 through D-29 and D-31.

A typical license back "Future Inventions" clause is quoted in the Request for Admission 19 (P.A. 196-7) and reads:

> "User agrees that in the event User acquired from any source, any inventions, improvements, or letters patent, domestic or foreign, *comprehending subject matter usable in any way in connection with methods or apparatus for the electrostatic atomization of liquids* or for coating with electrostatically atomized liquids, Ransburg shall have with respect to coating methods and apparatus employing said inventions, improvements, and the subject matter of said letters patent, a royalty-free non-exclusive, assignable license, with right to sub-license, such license to be irrevocable ex-

> cept upon voluntary surrender by Ransburg. Patents subject to Ransburg's rights under this paragraph shall include only patents acquired by User during the term of this agreement, patents acquired by User within two years following termination of this agreement, and patents whenever acquired by User which cover inventions and improvements made within the term of this agreement or within two years following its termination." (Emphasis ours.)

According to Exhibit E (P.A. 152-177) submitted by Defendant in its answer to Interrogatory 33 (P.A. 50) as of the filing of this suit on *October 11, 1956* there were still active and in force over *130* airless coating agreements with this license back provision on "Future Invention" (*forms D23 through 29 and 31 itemized in Exhibit E*). Included in this group of active licenses is the D-29 form of agreement with Avco Manufacturing Corporation (P.A. 154) as to which Defendant had correspondence (P.A. 965-967) with Avco just two months before the trial in December, 1958.

Now because Defendant in the middle of 1955, as illustrated for example by its form of agreement D35 (P.A. 145) comprising one of 45 forms used by it, adopted a printed form which did not use the "Future Inventions" clause, the Courts below erroneously and contrary to the admitted facts, assumed Defendant had discontinued all its license back provisions in its outstanding agreements.

Such is not the fact since Defendant during the pendency of the suit had active over *130* previously executed license-back agreements with such large concerns as E. I. Dupont de Nemours (P.A. 158); General Electric Co. (P.A. 161); Hotpoint, Inc. (P.A. 163); Webster Chicago Corporation (P.A. 175); and Whirlpool-Seegar Corporation (P.A. 176). Also see (R.A. 48 (P.A. 201) and R.A. 56 (P.A. 202)).

Defendant had for a period of over eight years, be-

ginning in the first of 1951 with its form D23 (P.A. 114) and through the trial forced a major part of the airless coating industry, dominated by Defendant, to agree to license back to Defendant, all inventions and improvements relating in any way to electrostatic atomization of liquids. As a consequence, all such improvements and inventions were completely stifled (R.A. 58 (P.A. 202)). As to this matter, Harold Ransburg testified (P.A. 487):

> "Q. As a matter of fact in all of these hundreds of licenses that you granted under the No. 2 system, has a single licensee actually ever made any improvement that they turned over to you?
>
> A. As a matter of fact, a normal licensee has never to my knowledge.
>
> Q. There was not any incentive for them to do it, was there?
>
> A. Only to improve their own operation.
>
> Q. *But they would have to give you free rights so you could license their competition, wouldn't they?*
>
> A. *That is correct.*" (Emphasis ours.)

The Defendant used the "Future Inventions" clauses not to pass along the benefits of any inventions made by others, but to regiment the industry. Defendant forced the acceptance of such "Future Inventions" upon the trade. As testified to by Mr. Hubbard, attorney for Hotpoint (P.A. 649) Defendant would not grant a license without having some grant back provision in it.

Mr. Hubbard testified (P.A. 649, 650):

> "Q. Did you endeavor to obtain an agreement without any such provision as to future inventions?
>
> A. Yes, we did.
>
> Q. With what results?
>
> A. Negative results. Now, I might say that such negotiations was carried on orally at this meeting in Indianapolis that I spoke of.
>
> Q. Well, can you tell us what transpired in that discussion—that is, what you said and what Mr. Ransburg said? That is, as you recall it?

A. I suspect I tried to preach to them a little bit about what I considered a rather killing-the-goose-that-laid-the-golden-egg kind of a provision.

Generally speaking, the General Electric Company has a rather liberal licensing policy. We do not require and, as a matter of fact we steer away from, the so-called grant back provisions and I have probably been indoctrinated in that philosophy. So our discussion was a very friendly one and a rather long one.

Mr. Downer, as I recall, *talked about the Trans-Wrap situation as being one which justified their position* and we had considerable argument about that. The net result was, however, that *I did not persuade them to eliminate this patent provision* and we did negotiate that one which I thought was a satisfactory substitute for theirs." (Emphasis ours.)

In another instance, the General Electric Company had objected to the inclusion of such a "Future Inventions" clause. In order to modify this clause, Defendant insisted upon an increased initial fee from $5300 to $9300 (Px.-KKK, P.A. 819).

The attitude of the trade with regard to improvements is clearly reflected in the matter in dealings with the General Electric Company. In a letter dated December 16, 1953, a representative of Defendant wrote to Mr. Harold Ransburg (Px.-II-4, P.A. 743), because a representative of General Electric had expressed the need for some sort of triggering system on the individual bells of the triple head unit commercialized by the Defendant. In that letter, the Defendant's representative said: *"He realized that the means of marketing which we had was detrimental to getting any further work done on the equipment* • • •."

The Courts have long recognized the susceptibility of such grant-back provisions to anti-trust violations. In *Transparent-Wrap Machine Corp.* v. *Stokes & Smith Co.*,

329 U. S. 637, 646-7 (1947), the Supreme Court in this regard said:

> "As patents are added to patents the whole industry may be regimented. The owner of a basic patent might thus perpetuate his control over an industry long after the basic patent expired. Competitors might be eliminated and industrial monopoly perfected and maintained. Through the use of patent pools or multiple licensing agreements the fruits of invention of an entire industry might be systematically funneled into the hands of the original patentee."

In a case subsequent to the *Transparent-Wrap* case, *United States* v. *General Electric Co.*, 80 F. Supp. 989, 1006 (D. C., S. D. New York 1948), the Court found *that against the background of market domination, the transfer of future patent rights as a condition for receiving a license was per se a violation of the Anti-trust laws.* The Court said:

> "The employment of basic patents, or patents which may be basic, to compel the transfer of future patent rights, is condemned *per se*, when practiced on a scale such as found in this suit."

The scope of the license-back provision is immaterial in determining anti-trust law violations. Thus, a non-exclusive grant-back provision for future inventions in a market dominated by the licensor was held to be an anti-trust violation in *United States* v. *General Electric Co.*, 82 F. Supp. 753, 816 (D. C., N. J., 1949).

The defendant herein relied upon this Court's decision in *Transparent-Wrap Machine Corp.* v. *Stokes & Smith Co.*, 329 U. S. 637 (1947), that "the inclusion in the license of the condition requiring the licensee to assign improvement patents is not *per se* illegal and unenforceable." However, in that case there was no showing of dominance or monopolization of the market or restraint of trade, as

are here involved in this case. Moreover, the Court there said, pages 647-648:

> "Congress, however, has made no specific prohibition against conditioning a patent license on the assignment by the licensee of improvement patents. But that does not mean that the practice we have here has immunity under the anti-trust laws. Indeed, the recent case of *Hartford Empire Co.* v. *United States*, 323 U. S. 386, 324 U. S. 570, dramatically illustrates how the use of a condition or covenant in a patent license that the licensee will assign improvement patents may give rise to violations of the anti-trust laws."

It is submitted that the aforesaid *Transparent-Wrap* decision, 329 U. S. 637, affords no justification for the decision below holding that Defendant was not in violation of the anti-trust laws. Such holding is in conflict with this Court's decision in *Hartford Empire Co.* v. *United States*, 323 U. S. 386; 324 U. S. 570 (1945).

QUESTION 4.

A patent owner dominating an industry in leasing equipment of licensed Letters Patent fraudulently procured from the Patent Office, is barred from enforcement of such patents.

The decision of the Court of Appeals herein is contrary to the decisions of this Court in Precision Co. v. Automotive Co., 334 U. S. 806, 819 (1945); Hazel Atlas Co. v. Hartford Co., 322 U. S. 238, 250 (1944); and Keystone Driller Co. v. General Excavator Co., 290 U. S. 240, 246 (1933).

Fraudulent Procurement of Starkey et al. Patents, Pending Over Ten Years, Was Part of Defendant's Illegal Monopoly of Market in Restraint of Trade.

It is the position of your petitioner that Defendant, well knowing that it had no patent protection covering its No. 2 rotary system (as to which it had granted *171* (Int. 40 (P.A. 51)) licenses-leases in a field dominated by Defendant without the benefit of any patent covering such system), fraudulently evolved a scheme to continue its monopolization of such field by a succession of wrongfully procured invalid letters patent (P.A. 39). This scheme necessitated making false representations by affidavits to the Patent Office, in order to get the Starkey patents allowed with dominating claims, which would create the false impression that Defendant *actually commercialized* the stationary type systems of the then pending parent application of the Starkey patents (Pet. App. 76-81).

The fact that Defendant knew it had never commercialized any of the structures illustrated in the Starkey *et al.* patents cannot be in dispute, in view of Defendant's unequivocal admissions herein (R.A. 30 (P.A. 199); R.A. 37 (P.A. 200); R.A. 2 (P.A. 194); Int. 149 (P.A. 70)).

During the prosecution of the Starkey method application, DX 5A-5B pages 206 and 221 (Pet. App. pages 74-75), the applicants after final rejection and on appeal to the Patent Office Board of Appeals repeatedly urged as follows, that their invention resided in using a single field as the "sole agent" for effecting atomization:

> "The heart of applicants' invention lies in the concept of employing a *single* electrostatic field which acts as the *sole* agent to atomize paint, disperse the particles formed by atomization, and deposit these particles on the work." (Emphasis in original.)

For some eight years after the application was filed, only one narrow claim had been indicated as being allowable by the Patent Office. It was then that the Defendants submitted an affidavit in the name of Gilbert Isgrigg (Dx-5B,OO, 303-305, Pet. App. 76) attempting to show certain commercial advantages for the subject matter of the application. The affidavit alleged that Mr. Isgrigg's employer, Hamilton Manufacturing Corporation of Columbus, Indiana, had previously employed the old air-type Ransburg No. 1 process and that on or about November 1952 the No. 1 equipment was replaced by new equipment from the Ransburg Company.

Also, in this respect, among others, the Howarth affidavit filed March 20, 1953 (Dx-5B, pp. 306-308, Pet. App. 79) identified the No. 2 licensed structures as being a commercial success of the Starkey *et al.* invention. In the Patent Office appeal brief filed May 25, 1953, it was represented as follows (Dx.-5B, p. 343, Pet. App. 82):

> "The affidavit of Donald C. Howarth testifies to the wide acceptance and commercial success of applicants' invention on industrial production lines. At the date of the affidavit, *78 licensees* including such companies as General Electric, Du Pont, and Studebaker, had paid substantial initial sums and were making con-

tinuing monthly payments for the right to use 101 production units *embodying the invention.*" (Emphasis ours.)

Now the fact of the matter was, as Defendant well knew in its representations to the Patent Office, that the installation at the Hamilton Company Plant (P.A. 878) was a No. 2 system and that all of its No. 2 system installations use a *rotating head or centrifugal atomizing head,* as distinguished from the Starkey *et al.* patent stationary head system wherein *the field alone does all the atomizing* (Int. 144(e) P.A. 68, P.A. 959-961).

Further it was admitted by Defendant that if the rotation of its centrifugal-head or applicator (which rotated at about 900 R.P.M.) of its commercial No. 2 system was arrested, the electrostatic field alone would not effect coating or painting as the paint would then drip on the floor (P.A. 350, P.A. 270, 350).

Following the foregoing false showing by Defendant, through affidavits, the Patent Office Board of Appeals after repeated appeals finally allowed the method claims in the application. In so doing that Board said (Px 5B p. 397, Pet. App. p. 84):

> *"We have examined these affidavits with care and we find that they establish beyond question that the spray painting process to which the claims are directed has achieved commercial success."* (Emphasis ours.)

After Defendant was successful in fully overcoming the resistance of the Patent Office, it was not satisfied with one patent, but without any divisional requirement by the Patent Office (R.A. 25, 26 and 28 (P.A. 198)) it arbitrarily divided out in 1954 the apparatus claims so as to prolong its patent monopoly with a second patent, *i. e.,* 2,794,417, based on the same false representations made to the Patent Office.

Patent monopolies, to be enforceable, must spring from backgrounds free from fraud or other inequitable conduct as held by the Supreme Court of the United States in the case of *Precision Co.* v. *Automotive Co.*, 324 U. S. 806, 815, 816 (1945). Also see *Keystone Driller Co.* v. *General Excavator Co.*, 290 U. S. 240, *Hazel Atlas Co.* v. *Hartford Co.*, 322 U. S. 238, 250.

Here, it is doubly important that the asserted monopoly "spring from backgrounds free from fraud or other inequitable conduct." Moreover, the assertion of invalid patent claims as a basis for the maintenance of an illegal monopoly in restraint of trade is definitely within the purview of the anti-trust laws, *Kellogg Co.* v. *National Biscuit Co.*, 71 F. 2d 662, 666 (1934).

CONCLUSION.

The Petition should be granted,

(a) to protect the public interest against Defendant's stifling and dominating grip on the important electrostatic coating segment of the painting industry,

(b) to settle the questions of anti-trust law, raised herein, as to illegality of Defendant's tied-together patent licensing and equipment leasing practices, and

(c) to throw open to the public the subject of the Defendant's fraudulently applied for and misused patents.

Respectfully submitted,

CHARLES F. MERONI,
OTTO R. KRAUSE,
c/o HILL, SHERMAN, MERONI, GROSS & SIMPSON,
53 West Jackson Bulevard,
Chicago 4, Illinois,

W. DONALD McSWEENEY,
c/o DALLSTREAM, SCHIFF, HARDIN, WAITE & DORSCHEL,
231 South La Salle Street,
Chicago 4, Illinois,
Attorneys for Petitioner.

FILE COPY

Office-Supreme Court, U.S.
FILED
OCT 24 1960
JAMES R. BROWNING, Clerk

IN THE

Supreme Court of the United States

OCTOBER TERM, 1960.

No. 501

BINKS MANUFACTURING COMPANY,
Petitioner,

vs.

LANSBURG ELECTRO-COATING CORPORATION,
Respondent.

PETITION APPENDIX
in support of
PETITION FOR WRIT OF CERTIORARI.

CHARLES F. MERONI,
OTTO R. KRAUSE,
c/o HILL, SHERMAN, MERONI, GROSS & SIMPSON,
53 West Jackson Boulevard,
Chicago 4, Illinois,

W. DONALD MCSWEENEY,
c/o DALLSTREAM, SCHIFF, HARDIN, WAITE & DORSCHEL,
231 South La Salle Street,
Chicago 4, Illinois,
Attorneys for Petitioner.

THE SUNTHORP-WARREN PRINTING COMPANY, CHICAGO

It was pointed out that one of the features of the suggested new claim is the provision of feeding means which distribute coating material to an extended atomizing zone from which zone it is atomized from a plurality of spaced points with the points being so close together as to permit the coating material to bridge the spaces therebetween. Such, of course, is not the system of Formhals as, regardless of the spacing of his nozzles, the coating material being contained within the nozzle could not bridge the space therebetween.

It was suggested by the Examiner that the obviously inherent bridging of the coating material at least in the apparatus illustrated in Figures 5 and 6 be pointed out in the specification and accordingly the specification has been amended to do so.

The unallowed claims remaining in the application are proposed to be cancelled with this amendment and it was believed at the interview that an action of this nature by applicants would place the case in condition for allowance.

Therefore, withdrawal of the final rejection, entry of the present amendment, and reconsideration and allowance of the application as now presented are respectfully requested.

Respectfully submitted,

SCHROEDER, HOFGREN, BRADY & WEGNER,
WILLIAM J. STELLMAN.

Chicago, Illinois,
August 21, 1956.

TABLE OF CONTENTS.

	PAGE
Judgment and Decision of Court of Appeals	2
Applicable Statutes	9
Admissions and Answers to Interrogatories Bearing on Anti-Trust	12
Admissions and Answers to Interrogatories Bearing on Patent Phase	29
Plaintiff's Exhibit IIIII Judgment in 92 F. Supp. 947 case	51
Pertinent Portions of File History (DX. 5A and 5B) of Starkey Patent 2,685,536	73
Exhibit 5A	73
Page 10 of Applicant's Amendment filed June 28, 1945	73
Pages 14 and 29 of Applicant's Board of Appeals Brief Filed January 5, 1951	74
Exhibit 5B	76
Affidavit of Gilbert Isgrigg filed March 20, 1953	76
Affidavit of Donald C. Howarth filed March 20, 1953	79
Page 15 of Applicant's Board of Appeals Brief Filed May 25, 1953	82
Page 5 of last Board of Appeals Decision of December 18, 1953 resulting in allowance of method claims in suit	83
From Defendant's Ex. 6—File History of Starkey and Ransburg application Serial No. 434,366, from Which Starkey et al Apparatus Patent No. 2,794,417 issued June 4, 1957	85
Amendment C	85

IN THE

Supreme Court of the United States

OCTOBER TERM, 1960.

No.....

BINKS MANUFACTURING COMPANY,
Petitioner,

vs.

RANSBURG ELECTRO-COATING CORPORATION,
Respondent.

PETITION APPENDIX

in support of

PETITION FOR WRIT OF CERTIORARI.

APPENDIX.

IN THE UNITED STATES COURT OF APPEALS
for the Seventh Circuit.

September Term, 1959—April Session, 1960.

No. 12737*

BINKS MANUFACTURING COMPANY, ETC.,
Plaintiff-Appellant,
vs.
RANSBURG ELECTRO-COATING CORPORATION, ETC.,
Defendant-Appellee.

Appeal from the United States District Court for the Southern District of Indiana, Indianapolis Division.

July 27, 1960.

Before SCHNACKENBERG, KNOCH and CASTLE, *Circuit Judges.*

CASTLE, *Circuit Judge.* Binks Manufacturing Company, plaintiff-appellant, prosecutes this appeal from a judgment of the District Court holding claims 1 to 6, 8, 10 and 11 of Starkey and Ransburg method patent No. 2,685,536 and Claim 4 of Starkey and Ransburg divisional apparatus patent No. 2,794,417 valid and infringed by use of the plaintiff's electrostatic spraying emitter. The judgment order enjoined plaintiff from further infringement, granted damages, reasonable attorneys' fees and costs to

* Only portions pertinent to Anti-Trust questions raised in Petition are printed herein.

defendant, and dismissed plaintiff's cross-counterclaim alleging anti-trust law violations by defendant. Ransburg Electro-Coating Corporation, defendant-appellee, is the assignee-owner of both patents.

The action originated in the District Court as a complaint for declaratory judgment, which was dismissed as moot when the defendant patentee counterclaimed charging plaintiff with infringement. Plaintiff's answer raised the issues of validity and infringement and its cross-counterclaim charged anti-trust law violations, unfair competition and misuse of patents. Substituted pleadings retained the same issues. The cause was heard on the pleadings, stipulations, admissions, answers to interrogatories, depositions, exhibits and the testimony of witnesses for the defendant.

The parties will be referred to by their original designations as plaintiff and defendant. Defendant is the patentee asserting infringement. Plaintiff is defending against that charge and affirmatively asserting anti-trust law violations.

The patents in suit relate to a method and apparatus for electrostatically coating articles with liquid coating material, including paint. There are several methods by which many articles of manufacture may be painted, including dipping, roller-coating, flow-coating and spraying. Defendant (and the predecessor partnership composed of its owners) has developed two methods of electrostatic coating. A compressed-air electrostatic system is referred to as the No. 1 Process. The patents in suit relate to an airless electrostatic system referred to as the No. 2 Process. During the year 1957 the total cost of all paint, varnish and lacquer used industrially in the United States approximated 644 million dollars. Approximately one per cent was applied by defendant's No. 2 Process and 0.6% by defendant's No. 1 Process.

In the No. 1 Process the paint is sprayed by means of compressed-air spray guns into an electrostatic field which is maintained between wires or electrodes and the conveyorized articles of manufacture so that paint particles are electrostatically charged and urged toward deposition upon the articles by the effect of the field.

In the No. 2 Process, the airless system to which the patents involved relate, the electrostatic field is maintained directly between an atomizing device and the articles on the conveyor. The liquid coating or paint is fed at a controlled rate to and distributed along the extended edge of a stationary or a rotary atomizing head. The strength of the electrostatic field at the edge is such that the field is capable of electrostatically atomizing fine electrically charged particles from the liquid. The field disperses these particles in the form of a spray and deposits them upon the articles to be coated. Patent No. 2,685,536 is upon the method employed in such airless electrostatic coating or spray-painting and patent No. 2,794,417 is upon the apparatus employed therein. The method and device electrostatically effect atomization, dispersion and deposition in combination and under control.

The No. 1 Process reduced coating material losses due to over-spray but in many instances considerable loss persisted because the electrostatic field only partially counteracted the tendency of the compressed-air blast to carry the coating material elsewhere than to the articles to be coated or painted. The No. 2 Process eliminated the necessity of compressed-air spray guns to atomize the coating materials. In many applications it virtually eliminated over-spray, and thus paint loss or waste. It reduced labor costs for clean-up operations and substantially reduced the manufacturer's investment in spray booths, exhaust systems and related equipment.

• • • • •

Plaintiff's cross-counterclaim alleged violation of Sections 1 and 2 of the Sherman Act (15 U. S. C. A. § 1 and § 2), and Section 3 of the Clayton Act (15 U. S. C. A. § 14). Plaintiff's contention that the District Court erred in the dismissal of its cross-counterclaim is predicated on charges that the District Court erroneously found and concluded that the defendant had not misused the patents in suit by reason of having combined licenses thereunder with leases of equipment and by not identifying the particular patents in the license agreements; that a cross-licensing agreement between defendant and another manufacturer was not for an unlawful purpose and its performance not a misuse of patents, nor in violation of the anti-trust law provisions, nor a damage to plaintiff; that a discontinued license-back provision in defendant's early license agreements did not constitute anti-trust law violation; and that patent procurement activities of the defendant did not violate the anti-trust law provisions.

On the record it had before it we cannot say there is clearly error in the District Court's finding and conclusion that plaintiff's domination of the airless electrostatic spraying system market is solely by virtue of the monopoly created by its patents and has not been extended or enlarged beyond its proper scope. The evidence supports a conclusion that plaintiff failed to establish that defendant has engaged in any activity beyond the exercise of rights incident to its patent monopoly.

The record establishes that defendant does not sell equipment outright nor has it licensed anyone to make and sell electrostatic spray-coating systems. Although defendant offers license agreements containing a lease of equipment the leasing arrangement is not imposed as a condition of licensing and licenses are available without equipment being leased from the defendant. The combined license-lease arrangement was therefore not illegal nor a

misuse of patents under the Clayton Act. *Cf. Linde Air Products Co.* v. *Graver Tank & Mfg. Co.*, 7 Cir., 167 F. 2d 531, 539. Although the record discloses that customers preferred the license-lease arrangement it is not indicated that such preference was due to defendant's insistence. Nor did the evidence concerning the difference in consideration paid require a finding that it was a compelling factor. That defendant furnished replacement parts without additional charge where the licensee leased equipment does not, on the facts here involved, evidence a Clayton Act or other anti-trust law violation. *Cf. Stearns* v. *Tinker & Rasor*, 9 Cir., 252 F. 2d 589, 604. The monopoly of defendant's patents was not extended by the agreement to articles or supplies not covered by the patent.

The license agreement does not identify specific patents but grants a right to use an identified process for coating particular items in accordance with a system identified by a drawing. No licensee pays for or receives any license under a patent not applicable to the system. The licenses are terminable by the customer on thirty days notice. It does not appear that any attempt is made to extend a patent monopoly beyond the life of the patent, nor is the issuance of a license to use the system covered by the patents in suit conditioned on the acceptance of licenses under unwanted patents. No prohibited "package licensing" is involved. *Apex Electrical Mfg. Co.* v. *Altorfer Bros. Co.*, 7 Cir., 238 F. 2d 867, 871; *Automatic Radio Mfg. Co. Inc.* v. *Hazeltine Research, Inc.*, 339 U. S. 827.

Defendant's cross-licensing agreement with Behr-Manning does not purport to embrace the patents in suit and the evidence establishes no direct damage to plaintiff's business or property as a result thereof. Relief under plaintiff's cross-counterclaim cannot be predicated on the cross-licensing agreement. *Blaski* v. *Inland Steel Company*, 7 Cir., 271 F. 2d 853, 854-5. It is unnecessary that

we consider the specific findings made by the District Court as to its validity or effects otherwise.

Between 1951, when defendant began to market its No. 2 Process on a commercial scale, and 1955 the license agreement contained license-back provisions requiring that future inventions by the licensee pertaining to method and apparatus for electrostatic atomization of liquids or to coating with the electrostatically atomized liquids be licensed to defendant royalty-free, on a nonexclusive basis, with the right to sub-license. The license-back provisions were eliminated from defendant's license forms in 1955. Defendant obtained no licenses from any of its licensees pursuant to the clause and the effect of the clause on the incentive of licensees to make improvements is purely conjectural. A license-back clause is not illegal *per se*. *Transparent-Wrap Machine Corp.* v. *Stokes & Smith Co.*, 329 U. S. 637. Unlike the situations condemned in *United States* v. *General Electric Co.*, 80 F. Supp. 989 and *United States* v. *General Electric Co.*, 82 F. Supp. 753 there is no wide-spread network of such agreements between competing companies affecting an entire industry.

Plaintiff's contention that the representations made by defendant to the patent office in the procurement of the patents in suit were false has been considered in connection with the arguments addressed to the question of commercial success. It is apparent that the representations did not evidence a purpose to "monopolize wrongfully the entire field of electrostatic coating on false affidavits" in violation of anti-trust law prohibitions as urged by plaintiff.

Plaintiff asserts error based on the District Court's ruling excluding from evidence, on defendant's objection, a certified copy of a consent judgment in an action brought by the United States against the Behr-Manning Corporation and certain other manufacturers charged with con-

spiring by means of patent agreements to monopolize commerce in coated abrasives. This consent decree did not find or adjudicate that the agreement between defendant and Behr-Manning was a violation of anti-trust law or otherwise unlawful, and neither that agreement nor the defendant was involved in any way in that action. It was an agreed judgment not in any way binding on defendant. The defendant was neither a party nor a privy to the action. There was no error in rejecting the proffered decree.

• • • • •

The judgment of the District Court is affirmed in all respects except insofar as it allows attorneys' fees to defendant. It is reversed as to the allowance of attorneys' fees.

1(d) APPLICABLE STATUTES.

United States Statutes Relied On in This Petition.

15 U. S. C. A.

§1. Trusts, etc., in restraint of trade illegal; exception of resale price agreements; penalty

"Every contract, combination in the form of trust or otherwise, or conspiracy, in restraint of trade or commerce among the several States, or with foreign nations, is declared to be illegal:"

15 U. S. C. A.

§2. Monopolizing trade a misdemeanor; penalty

"Every person who shall monopolize, or attempt to monopolize, or combine or conspire with any other person or persons, to monopolize any part of the trade or commerce among the several States, or with foreign nations, shall be deemed guilty of a misdemeanor, and, on conviction thereof, shall be punished by fine not exceeding fifty thousand dollars, or by imprisonment not exceeding one year, or by both said punishments, in the discretion of the court. As amended July 7, 1955, c. 281, 69 Stat. 282."

15 U. S. C. A.

§14. Sale, etc., on agreement not to use goods of competitor

"It shall be unlawful for any person engaged in commerce, in the course of such commerce, to lease or make a sale or contract for sale of goods, wares, merchandise, machinery, supplies, or other commodities, whether patented or unpatented, for use, consumption, or resale within the United States or any Territory thereof or the District of Columbia or any insular possession or other place under the jurisdiction of the United States, or fix a price charged therefor, or dis-

count from, or rebate upon, such price, on the condition, agreement, or understanding that the lessee or purchaser thereof shall not use or deal in the goods, wares, merchandise, machinery, supplies, or other commodities of a competitor or competitors of the lessor or seller, where the effect of such lease, sale, or contract for sale or such condition, agreement, or understanding may be to substantially lessen competition or tend to create a monopoly in any line of commerce. Oct. 15, 1914, c. 323, § 3, 38 Stat. 731."

15 U. S. C. A.

§15. Suits by persons injured; amount of recovery

"Any person who shall be injured in his business or property by reason of anything forbidden in the antitrust laws may sue therefor in any district court of the United States in the district in which the defendant resides or is found or has an agent, without respect to the amount in controversy, and shall recover threefold the damages by him sustained and the cost of suit, including a reasonable attorney's fee. Oct. 15, 1914, c. 323, § 4, 38 Stat. 731."

15 U. S. C. A.

§26. Injunctive relief for private parties; exception

"Any person, firm, corporation, or association shall be entitled to sue for and have injunctive relief, in any court of the United States having jurisdiction over the parties, against threatened loss or damage by a violation of the antitrust laws, including sections 13, 14, 18, and 19 of this title, when and under the same conditions and principles as injunctive relief against threatened conduct that will cause loss or damage is granted by courts of equity, under the rules governing such proceedings, and upon the execution of proper bond against damages for an injunction improvidently granted and a showing that the danger of irreparable loss or damage is immediate, a preliminary injunction may issue:"

28 U. S. C. A.

§1254. Courts of appeals; certiorari; appeal; certified questions

"Cases in the courts of appeals may be reviewed by the Supreme Court by the following methods:

(1) By writ of certiorari granted upon the petition of any party to any civil or criminal case, before or after rendition of judgment or decree;"

28 U. S. C. A.

§1338. Patents, copyrights, trade-marks, and unfair competition

"(a) The district courts shall have original jurisdiction of any civil action arising under any Act of Congress relating to patents, copyrights and trademarks. Such jurisdiction shall be exclusive of the courts of the states in patent and copyright cases.

(b) The district courts shall have original jurisdiction of any civil action asserting a claim of unfair competition when joined with a substantial and related claim under the copyright, patent or trademark laws. June 25, 1948, c. 646, 62 Stat. 931."

ADMISSIONS AND ANSWERS TO INTERROGATORIES BEARING ON ANTI-TRUST.

(Int. Stands for Interrogatories and R. A. Stands for Request for Admissions.)

Int. 85. What is the amount of royalties and fees received year by year by the defendant to the present date on the licenses which it has granted in the electrostatic spray coating field?

Int. 86. What is the amount of royalties and fees received year by year to the present date by the Defendant on its licenses for airless electrostatic spray coating?

85 and 86. Total fees received year by year by defendant (and by defendant's predecessor) for its compressed air spray process (No. 1 Process) and for its airless process (No. 2 Process) since the commencement of the marketing of its electrostatic spray coating processes in 1944 are approximately as follows:

Year	No. 1 Process Fees	No. 2 Process Fees
1943	0	
1944	$ 47,000	
1945	165,000	
1946	270,000	
1947	380,000	
1948	555,000	
1949	665,000	0
1950	810,000	$ 6,000
1951	880,000	210,000
1952	920,000	535,000
1953	890,000	700,000
1954	820,000	1,075,000
1955	830,000	1,485,000
1956	720,000	2,220,000
1957	630,000	2,640,000

Int. 12. (a) Does the defendant know of any other supplier in the trade in the United States of America of airless electrostatic spraying equipment.

12. (a) No, not as a unit.

Int. 16. (a) Does the defendant know of anyone else in the United States of America that is manufacturing and selling electrostatic spraying equipment for atomizing liquid into discrete particles without the use of air.

16. (a) No.

R. A. 41. Does the defendant admit that prior to the issuance of its process patent No. 2,685,536, as far as is known to defendant, it was the sole manufacturer and supplier in this country of airless electrostatic spraying systems?

41. Yes.

R. A. 46. Does the defendant admit that it is presently attempting to enjoin the manufacture and sale of all competitive airless electrostatic spraying systems on the market known to defendant?

46. Yes.

R. A. 17. That defendant has issued in excess of three hundred licenses in the field of airless electrostatic spray coating, and in each instance, the license provided for defendant leasing equipment under each such license.

17. Admitted.

R. A. 38. Does the defendant admit that (a) during the period of five (5) years preceding this suit it, in connection with its licensing program, charged initial fees of $5,000.00 to $40,000.00 * * *

38. (a) Yes.

R. A. 71. Does the defendant admit that in granting its licenses in the airless electrostatic coating field

(a) it has not only granted licenses under its letters patent in suit, but has also joined with such licenses leases for equipment furnished by the defendant and

(b) has at all times maintained title to all equipment it has furnished its licensees under its agreements with them and

(c) in no case prior to the filing of this suit has it ever actually granted a license without the license being accompanied by a lease of equipment?

71.

(a) Yes.

(b) Yes.

(c) Yes.

R. A. 85. (a) That as far as defendant knows, as of on or about July 15, 1953, there was no airless electrostatic spray coating system on the market outside of those being marketed by Defendant, and

(b) the only source, as far as Defendant knew, for such systems was the Defendant.

85. (a) Admitted.

(b) Admitted.

Int. 75. Does the defendant know of any concern or party other than Defendant which renders any servicing for Defendant's electrostatic spray coating equipment in the hands of Defendant's licensees?

75. No, other than the licensees.

Int. 3. (a) How many licenses have been granted by defendant on electrostatic spraying,

(b) how many of those licenses are still in force and effect and

(c) what are the dates of all licenses that have been granted and the names of the licensees of all such licenses?

3. (a) 732, up to the date of the filing of the complaint.

(b) 463, up to the date of the filing of the complaint.

(c) Exhibit "B" attached lists the names and locations of the licensees and the dates of all licenses granted by defendant up to the date of the filing of the complaint for electrostatic spray coating of articles. In addition to the licenses identified in Exhibit "B", defendant on commencement of business acquired from its predecessors in business a number of licenses with companies engaged in electrostatic spray coating of articles.

Int. 169. With regard to defendant's indication or notice beginning around 1948 to its licensees that it was coming on to the market with an airless electrostatic spray coating system,—

(a) approximately what percentage of its licensees thereafter leased the No. 2 system.

169.

(a) Of the licenses granted subsequent to the year 1950, when Defendant first indicated to its No. 1 system licensees that it was coming on the market with a new system, approximately 66 percent were for the No. 2 system.

R. A. 88. (a) Defendant has never leased any of its airless electrostatic spray coating equipment without at the same time granting a license under its patents.

88. (a) Defendant admits that it has never leased any of its airless electrostatic spray coating equipment without at the same time granting, at least by implication, license under its patents to use the leased equipment in accordance with the terms of the contract with the customer; otherwise denied.

Int. 8. (a) How many different forms of licenses and leases has the defendant used in its licensing and leasing program,

(b) what is the date that each of the same was adopted and

(c) what is the number or other identity given to each form of lease and license.

8. (a) (b) (c) All of defendant's agreement forms relating to electrostatically spray coating of articles are attached as Exhibits D-1 through D-45, and such exhibits are self-explanatory.

Int. 170. (a) Was substantially the same pattern of selling its licensees initially on the No. 2 airless system used as was employed in selling its air type No. 1 system, and

(b) was the experience gained in leasing the No. 1 system of assistance in getting customers to lease the No. 2 system, and

(c) when customers leased the No. 2 system in place of the No. 1, was there in any proportion of such leases no substantial interruption in the payment of fees to defendant by its customers, and

(d) did some customers contemporaneously lease both the No. 1 and No. 2 systems,

170. (a) Yes, in many respects.

(b) Defendant's experience in marketing its No. 1 system was of assistance in marketing its No. 2 system.

(c) Yes.

(d) Yes; some customers have simultaneously been licensees of the No. 1 and No. 2 systems, as shown in Exhibit A to the answer to Plaintiff's Interrogatory No. 2 (b).

R. A. 84. Beginning around March 21, 1949, and for several years thereafter, defendant leased and licensed its No. 2 airless electrostatic coating system without having *issued* to it any letters patent affording the defendant exclusive patent rights as to airless electrostatic spray coating, and

(b) defendant in its leasing and licensing of the No. 2 system during *said several year period* included in every instance in its printed form of an agreement a provision that the lessee was being licensed under letters patent or patent applications of the defendant, * * *

84. (a) Admitted.

(b) Admitted.

R. A. 45. Does the defendant admit that in the case of its printed licensing and leasing forms previously identi-

fed herein, such forms were printed by or for the defendant

(a) and submitted generally to prospective licensees, and

(b) not for or on behalf of any particular licensee?

45. Yes.

R. A. 44. Does the defendant admit that in its licensing of airless electrostatic spraying systems, it in each instance prepared the license and lease and submitted them to the licensee?

44. Yes.

R. A. 56. Does the defendant admit that in granting licenses, licensees have not only been given the benefit of operating under the patents taken out by the defendant, but also under other patent rights acquired from third parties?

56. Yes, in such cases as such rights were applicable.

R. A. 58. Does the defendant admit that in no instance where it has acquired patent rights from other parties has any of such parties gone into competition with the defendant in the electrostatic liquid spraying field?

58. Yes.

R. A. 11. That defendant is presently charging with patent infringement each known supplier who has offered airless electrostatic spray coating systems for sale in the United States.

11. Other than the instant case, Defendant has charged with patent infringement one supplier in the United States of airless electrostatic spray coating systems, and knows of no other such suppliers; otherwise denied.

R. A. 57. Does the defendant admit that in its licensing program on electrostatic spraying systems it has for the most part used printed forms of licenses which do not

single out any particular patents by number, of those in the portfolio of the defendant?

57. Yes.

Int. 40. (a) How many licenses were granted by the defendant prior to the issuance of the Starkey patent on August 3, 1954 for airless electrostatic spray coating (without the use of air)?

40. (a) 171.

Int. 81. (a) Has the defendant issued any licenses relating to electrostatic spray coating in which the duration of payments to be made by licensees was confined expressly by the terms of such license to the life of any patent or patents under which such license was granted.

81. (a) No.

Int. 52. (a) Has the defendant ever submitted a license under its Starkey patent alone without an accompanying proposed agreement for the furnishing of equipment by the defendant * * *.

52. (a) Defendant has never submitted any license limited to its Starkey, et al. patent alone.

Int. 53. (a) Has the defendant ever offered to license, under the Starkey Patent No. 2,685,536, any manufacturer of spray coating equipment capable of practicing the process of the Starkey patent with the right to make and sell electrostatic emitters.

53. (a) No.

Int. 79. Did Defendant, in letters transmitting license and lease agreements after May, 1953 include in such letters a statement reading substantially as follows: "We understand that you wish this type of agreement rather than one under which we do not furnish these additional items"?

79. Yes, but said letters transmitted proposed contracts for execution rather than consummated agreements.

Int. 80. (a) Does Defendant know of any prior writings from recipients of the letters referred to in the preceding interrogatory requesting Defendant to supply equipment as part of the agreement referred to in the quoted statement, * * *

80. (a) No, although there may be some such writings which might be found upon a search of the files.

Int. 10. What part of the defendant's cost of each piece of leased equipment is recovered by the defendant at the time of its granting a lease and a license under its patents?

10. All of it.

R. A. 97. (a) The figure of forty percent of the initial leasing fee for a patent license without equipment set forth in the third paragraph of defendant's "Pricing Guide for No. 2 Process," dated July 15, 1953, was not dependent upon or varied by the number of patents or patent applications applicable to the equipment to be licensed.

(a) Admitted.

Int. 182. (a) With regard to defendant's "Pricing Guide for No. 2 Spray Process" dated July 15, 1953 (Exhibit JJJ-2), what basis was employed for arriving at figure of forty percent of the initial fee as set forth in the third paragraph thereof, and

(b) was the predetermined forty percent figure applicable regardless of the number or character of the patents involved.

182. (a) The initial fee of Exhibit JJJ-2 for a non-equipment license, had one been desired, was expressed as 40 percent of the initial fee for a license with equipment, the difference between said initial fees representing, on the average, the cost of the equipment furnished and installation supervision, plus a reasonable profit thereon.

(b) Yes, because the initial fee is related to the value to the licensee of the system in operation and not to the number of patents involved.

Int. 11. (a) Does the defendant, as a part of its patent licensing and leasing program, render engineering and technical services to its licensees?

11. (a) Yes.

Int. 89. (a) Has Defendant or anyone else ever sold or offered for sale any second-hand or used equipment of Defendant for airless electrostatic spray coating,

89. (a) No.

R. A. 110. (b) Defendant licenses in blanket form all of its patents which it considers may be applicable in each instance.

110. (b) Admitted to the extent that each of Defendant's customers receives, in effect, a covenant that it will not be sued for infringement of any of Defendant's present or future patent rights so long as the customer does not operate beyond the scope of the use specified in its written agreement with Defendant; otherwise denied.

Int. 187. (a) Is it a fact that as a general rule in the majority of instances, the customer in leasing defendant's equipment is never advised by defendant as to the patent numbers of the patents being licensed in defendant's portfolio of patents and patent rights.

187. Without adopting Plaintiff's characterization of Defendant's marketing program, Defendant answers this Interrogatory as follows:

(a) Yes.

R. A. 51. Does the defendant admit that as far as it knows there are no secondhand dealers in the United States handling electrostatic airless spray coating systems?

51. Yes.

R. A. 52. Does the defendant admit that as far as it knows there is no servicing organization in the United States outside of itself for servicing its co-called No. 2 airless electrostatic coating system?

52. Yes.

R. A. 53. Does the defendant admit that under its licensing and leasing agreements with its existing licensees, it is obligated to furnish replacement parts on equipment that it furnishes such licensee?

53. Yes, subject to conditions specified in the agreement.

R. A. 54. Does the defendant admit that in connection with its licensing and leasing program on airless electrostatic spraying systems it usually, as a part of the fees received by it, for the most part supplies the majority of replacement parts on the equipment furnished by the defendant to its licensees?

54. Yes.

Int. 183. (a) As to the agreement No. 5228 with Avco Manufacturing Corp., was form No. 434 previously identified by defendant as D-29 allegedly adopted in April, 1952, used in said agreement, and

(b) is said agreement, as modified in defendant's agreement letter of January 18, 1954, to Avco, still in force and effect, and

(c) does said agreement as executed include the "future inventions" Paragraph 11 of said form, and

(d) did such agreement as executed include the provision that "Ransburg shall have the right to terminate this agreement at any time after three years from the date of Ransburg's acceptance hereof upon six months' written notice to user"?

183. (a) Yes.

(b) Yes.

(c) Yes.

(d) Yes.

R. A. 90. (a) That of the thirty-six patents listed in Exhibit A embodied in defendant's agreement of January 18, 1954, comprising part of its airless electrostatic coating agreement No. 5228 with Avco Manufacturing Corp., only

four, namely Turner Patent No. 2,651,287 and Crouse Patent No. 2,568,611, Ransburg patents Nos. 2,658,009 and 2,658,472, disclosed or claimed *airless* electrostatic spraying of liquid, and

(b) none of those patents covered the No. 2 system leased and licensed to Avco Manufacturing Corp.

90. (a) Admitted.

(b) Admitted.

Int. 193. By the expression, "the possible competition by them" referred to in the letter of March 4, 1943, "Re: Brush License"

(a) was reference made to possible competition by the Brush Development Company, with whom Harper J. Ransburg Company had previously entered into a license agreement dated September 19, 1942,

193. (a) Defendant has no more knowledge of the significance of the quoted expression than appears from the letter itself.

Int. 196. (a) Is the following statement quoted from a letter dated May 6, 1941 to Western Electric Company from the Ransburg Company's Counsel factually true:

"While, at the present time, our client is experimenting with spraying equipment primarily for their own products and in their own plant, it is contemplated that if it develops successfully and there is any demand, their interest would then extend to the sale or lease of such equipment to others."

196. (a) It is true, as far as it goes.

Int. 111. As far as the defendant knows, have the parties to the cross license agreement dated September 26, 1944, between Ransburg and Behr-Manning Corp. whereby the electrostatic deposition field was divided into one of liquid particle coating and another of solid particle coating

(a) lived up to the provisions of such agreement, and

(b) is such an agreement still of force and effect?

111. Without adopting plaintiff's characterization of said contract, defendant answers Interrogatory 111 as follows:

(a) Yes.

(b) Yes.

Int. 160. (a) Did the defendant or its predecessor ever receive in writing any notice of patent infringement from Behr-Manning.

160. (a) No.

R. A. 102. (a) In the negotiations by the Defendant's predecessor with Behr-Manning Corporation leading up to the agreement of September 26, 1944, the Ransburg Company, as of August 8, 1944, made the following representation to Behr-Manning Corporation: Patent No. 2,270,341 is the one to which we referred as possibly interesting to you in the abrasive or pileous fabric field, or at least one in which you could contribute materially in the composition cork industry or the fireproof insulating shingle industry."

• • • • •

(c) defendant, after the consummation of said agreement, never did market or license or lease any equipment under its said patent 2,270,341 in the solid particle field,

102. (a) Admitted.

(c) Admitted.

R. A. 103. In the negotiation of defendant's predecessor company with Behr-Manning corporation leading up to the consummation of the agreement dated September 26, 1944,

(a) The Ransburg Company in a letter dated November 13, 1944, to Behr-Manning Corporation, indicated its "greatest concern" was as follows:

"Our greatest concern and that to which we have given the most thought and consideration was the question of just how to word our future license agreements so that there could be no question in the minds of our users that they were restricted from operating in your field, and still not create undue sales resistance for ourselves. It was

originally our thought that this would best be accomplished by adding to our license agreements "said right does not include the use of this process in the manufacture of abrasive articles or articles coated with particles of fibrous material of every kind."

• • • • •

(a) Admitted.

Int. 83. (a) Has Defendant received any inquiries for licenses in the fields of manufacturing abrasive articles, flock coated articles, and/or articles coated with fiber-shaped particles, and if so,

(b) what disposition was made of such inquiries?

83. (a) No, but on occasion defendant has received inquiries as to whether its processes and equipment are suitable for one or more of these purposes.

(b). Defendant has replied in substance that its processes and equipment are primarily for electrostatic painting, and has informed the inquirer that Behr-Manning Company might be able to furnish the desired information.

R. A. 82. (a) Defendant received a letter dated February 10, 1955, from the Dewey and Almy Chemical Company of Cambridge, Massachusetts, reading as follows:

"Ransburg Electro-Coating Corporation
1204 Barth Avenue
Indianapolis, Indiana

Gentlemen:

We understand that you manufacture equipment for charging drums electrostatically to be used with a floc spraying process in coating materials. Could you send us your literature on the equipment and whatever else you may have on the floc spraying process. We have an application which we are considering for use on this process and are interested in what you may have.

Very truly yours,

D. A. Trageser"

and

(b) defendant replied to such letter in a letter dated February 15, 1955, reading as follows:

"Dewey and Almy Chemical Company
Div. of W. R. Grace & Co.
Cambridge 40, Massachusetts

Gentlemen:

We have your letter of February 10 and wish to thank you for your interest in electrostatic spraying. The application of flock with electrostatic methods is somewhat out of our field since we are primarily interested in the application of liquid coating material such as paints, lacquers, enamels, etc. The field of flock coating electrostatically has been quite fully and completely developed by the Behr-Manning Corporation of Troy, New York. I would like to suggest that you contact them concerning your problems. Mr. John Amstus of that company would be pleased to discuss these matters with you.

Very truly yours,

Emery P. Miller"

82. (a) Admitted.

(b) Admitted.

R. A. 101. (a) In the negotiations for the license agreement dated October 7, 1948, between Research Corporation of New York and the defendant, a revised draft of the agreement was submitted to defendant's counsel by Research Corporation in a letter dated August 23, 1948, and wherein Paragraph 3(c) of the agreement setting forth the license right given to defendant and the right to sublicense was modified to include the following:

"• • • *provided nevertheless* that such right shall be limited to apparatus employing one or more of the inventions of the Licensed Patents in the electrostatic deposition of liquid materials and shall specifically preclude any use in connection with flock-deposition, flock-coated material, or the manufacture of abrasives and coated abrasives," and

(b) such agreement was executed with said quoted provision, and

(c) defendant after the execution of said agreement did not violate the requirements of the aforesaid quoted provisions.

101. (a) Admitted.

(b) Admitted.

(c) Defendant admits that it has not engaged, and has not purported to license any other to engage, in flock-deposition, or the manufacture of any flock-coated material, abrasives, or coated abrasives under the patents which were the subject of its contract with Research Corporation; but Defendant otherwise denies section (c) of Request No. 101, and specifically denies that its contract with Research Corporation expressed any commitment limiting its activities.

Int. 82. (a) Has defendant issued any license in the fields of manufacturing abrasive articles, flock-coated articles and/or articles coated with fiber-shaped particles,

82. (a) No.

R. A. 94. (a) As far as known by the defendant, at least since the execution of its predecessor's agreement dated September 26, 1944 with Behr-Manning Corporation, it has never experienced any competition by that company in the field of electrostatic spray coating of liquid particles.

94. (a) Defendant admits that to the best of its knowledge Behr-Manning Corporation has never attempted to market any system involving electrostatic coating with liquid particles; otherwise denied.

R. A. 105. During the course of its negotiations leading up to the license agreement dated September 26, 1944, with Behr-Manning Corporation, defendant's predecessor company received in the usual course of business the following quoted letter dated November 24, 1944:

"November 24, 1944

Mr. Harper J. Ransburg
Harper J. Ransburg
Company
Indianapolis 7, Indiana

Dear Mr. Ransburg:

"Enclosed you will find three copies of the electrocoating agreement which have been signed by Behr-Manning in the form in which the agreement was redrafted as outlined in your letter of November 13. We think that the suggested changes were in accord with our verbal discussion and reflect a true meeting of minds.

"It is my impression that the copy of the electrocoating agreement which you have executed with your existing licensees or had under negotiation with prospective licensees at the time our agreement was being consummated, contains an indication of the purpose for which the licensed Ransburg equipment is to be employed by the licensee.

"If this is the case and since no licenses have to your knowledge been granted in the flock or abrasive fields, we do not foresee difficulty or conflict with any of your existing licensees and it should not be difficult for you to so limit your future licensees as to prohibit the employment of the patents under which you have given us exclusive rights for abrasives and flock coated articles, in these fields.

"We are looking forward to a pleasant and mutually profitable association in this new cross license agreement.

Your very sincerely,

Behr-Manning Corporation
E. C. Schacht
VicePresident"

105. Admitted.

R. A. 91. Defendant entered into licensing and leasing agreements as to its electrostatic airless or No. 2 system with Enameled Steel and Sign Company of Chicago, Illinois (No. 3448) as of March 21, 1949, and with Eastern Venetian Blind Company of Baltimore, Maryland (No. 3530) as of June 14, 1949,

(a) in each of which agreements the licensee or user was given a patent license to use defendant's Process, with the express provision "but said right shall not include the use of said Process in the manufacture of abrasive articles, flock-coated articles or articles coated with fiber shaped particles," and

(b) that as far as is known to defendant, the equipment furnished under the aforesaid two agreements was not used "in the manufacture of abrasive articles, flock-coated articles or articles coated with fiber shaped particles."

(a) Admitted.

(b) Admitted.

R. A. 99. In the license agreement entered into by defendant with Research Corporation of New York on October 7, 1948, in which the defendant obtained a license to manufacture, use and sell apparatus embodying the inventions of patents Nos. 2,097,233 and 2,221,338 and to sublicense others to use the methods of said patents and to use and sell, but not to manufacture the apparatus of said patents; it was specifically provided that the license granted defendant "does not include use of any such invention in connection with flock deposition, flock-coated material or in the manufacture of abrasives and coated abrasives."

99. Admitted.

ADMISSIONS AND ANSWERS TO INTERROGATORIES BEARING ON PATENT PHASE.

(Int. stands for Interrogatory and R. A. for Requests for Admissions.)

Int. 117. (a) Was the defendant ever advised by Dr. Emery P. Miller or anyone else that prior to October 1943, it was old in the scientific arts to use an electrostatic field for *effecting* atomization and spraying of liquid particles and if so

(b) what was the name of such person,

(c) the identity of such prior use, and

(d) the date when such advice or knowledge was received?

117. (a), (b), (c), and

(d) Since coming into existence, defendant has known that it was old, prior to October 1943, to use an electrostatic field for effecting atomization and spraying of liquids. At least one of the officers of defendant possessed such knowledge at the time of defendant's incorporation on January 1, 1948.

R. A. 60. For the purpose of this lawsuit, does the defendant admit (as testified to by Dr. Emery P. Miller, R. 42 to 44)

(a) that airless electrostatic detearing was used commercially before the making of the alleged Starkey et al invention of patent 2,685,536 in suit and * * *

60.

(a) Yes.

R. A. 68. Does the defendant admit that

(a) its so-called No. 1 or air type electrostatic coating system is prior art with reference to both of the patents in suit and (b) * * *

68.

(a) Yes.

Int. 152. In connection with defendant's answer to Interrogatory 117, wherein it said "defendant has known that it was old, prior to October 1943, to use an electrostatic field for effecting atomization and spraying of liquids.",

(a) what is the name of the officer or officers who had such knowledge,

(b) what is the identity of the source of party or persons from which such knowledge was derived, and

(c) was any of such knowledge acquired in written form or reduced to writing, and

(d) if so, what is the identity of each and all such papers in writing bearing in any way on such knowledge?

152.

(a) E. M. Ransburg

(b), (c) and (d) Such knowledge was acquired from the United States Patent to Darrah, No. 1,958,406, cited by the Patent Office Examiner in the file wrapper of Starkey Patent No. 2,685,536 in suit.

R. A. 61. For the purpose of this law suit does the defendant admit that

(a) airless electrostatic detearing was in public or commercial use more than one year prior to the original filing date, September 29, 1944, of the Starkey et al letters patent in suit, and

(b) that according to such detearing excess liquid on the previously coated given object was atomized, dispersed and deposited in liquid form on another object such as a grid?

61.

(a) Yes.

(b) No, but incidental to the removal of excess material from coated articles by electrostatic detearing, on occasion some atomization, dispersion, and deposition of the material upon the apparatus and floor occurred sporadically and momentarily.

Int. 22. (a) What was the highest voltage the defendant has ever used in conjunction with its *air type* of electrostatic spraying equipment,

(b) when and

(c) where was such equipment operated?

22. (a) Defendant's electrostatic coating processes using compressed air spray guns have been operated commercially at a voltage as high as approximately 90,000 volts.

(b) July, 1951 and subsequently.

(c) Roberts Manufacturing Company, Cleburne, Texas and subsequently at other places.

R. A. 70. Does the defendant admit that as far as its No. 1 air type electrostatic system is concerned, it has always provided for the introduction of liquid into the field in such manner that none of the liquid entered in the corona discharge of the high potential electrode?

70. No.

R. A. 66. Does the defendant admit for the purpose of this lawsuit (as testified to by Dr. Emery P. Miller, R. 126) that liquid that is atomized in an electrostatic field is of necessity also dispersed?

66. Yes.

R. A. 64. Does the defendant admit as to both of its two Starkey et al patents in suit, 2,685,536 and 2,794,417, that the earliest act of conception that will rely upon herein is the paint brush activity commencing on or about October 8, 1943, and documented in a notebook as of October 29, 1943, with the following notation, "Al Starkey suggested using the detearing action from the bottom of a brush as the atomizing agent to spray items passing under this arrangement"?

64. Yes.

R. A. 62. For the purpose of this lawsuit and in connection with defendant's previous admission 14 as to its use of a wet paint brush, does the defendant admit that when the

paint brush was disposed in an electrostatic field, it emitted liquid paint which was atomized, dispersed and deposited on an article such as paper?

62. No. However, defendant admits that when the paint brush was effectively arranged as one terminus of the electrostatic field and the article was effectively arranged as the other terminus of the field, liquid paint was atomized from the brush and the atomized particles were dispersed and deposited on the article.

R. A. 65. Does the defendant admit for the purpose of this lawsuit (as testified to by Dr. Emery P. Miller, R. 154) that

(a) in the use of its so-called air type No. 1 electrostatic coating system, such system had been tried and operated with a "jet or liquid adjacent the high potential electrodes in the area of the corona discharge" and

(b) "and with the result that the material atomized off the device"?

65. No, but Dr. Emery P. Miller observed that, upon shutting off the operation of the air type No. 1 electrostatic coating system, when the flow of compressed air from the air spray gun ceased before the flow of paint ceased, a jet of liquid paint was momentarily discharged adjacent the high potential electrodes in the area of the corona discharge, with the result that some atomization occurred.

R. A. 14. That an initial act of conception in connection with the subject matter of the Starkey and Ransburg patent in suit was the observation by Starkey of the behavior of a wet paint brush in an electrostatic field.

14. Admitted.

R. A. 63. Does the defendant admit with regard to its original paper exhibit (PX-B) used in connection with the initial paint brush inception of the alleged Starkey et al invention, the paint that was applied to the paper was electrostatically atomized, dispersed and deposited on the paper?

63. Yes.

Int. 164. • • •

(d) is the Starkey et al process patent No. 2,685,536 in suit based upon the principle observed in the behavior of a wet paint brush in an electrostatic field observed by Starkey?

(d) In part.

Int. 165. (a) Did the operation of the behavior of the wet paint brush in an electrostatic field observed by Starkey, as referred to in Request for Admission No. 14, include the step of maintaining, between the brush and the piece of paper (Exhibit No. B) which was coated, an electrostatic field which electrostatically effected atomization, dispersion and deposition of paint?

165. (a) The initial act of conception referred to in Defendant's reply to Request for Admission No. 14 did not involve any paper, but did involve existence between the brush and an opposed surface of an electrostatic field which electrostatically effected atomization, dispersion and deposition of paint on such surface.

R. A. 72. Does the defendant admit that it was a party plaintiff in a suit brought in the district court of the District of Columbia under 35 U. S. C. 145, formerly known as Section 4915 of the Revised Statutes, to adjudge Emery P. Miller as being entitled to receive a patent on an application, Serial Number 626,631, filed on November 5, 1945, and which case was decided adversely to defendant on March 2, 1955, in 129 F. Supp. 241, affirmed at 229 F. 2d 21?

72. Yes.

R. A. 74. Does the defendant admit at the time of the pendency of the *Miller* v. *Weeks* suit (129 F. Supp. 241) that as to the three prior reference patents in suit referred to in the court's decision it had a license under the Wintermute patent 2,221,338 and owned the other two patents, namely the Pugh patent 1,855,869 and the Ransburg patent 2,334,648?

74. No, but defendant admits that, at the time of the pendency of the *Miller* v. *Weeks* suit (129 F. Supp. 241), of the three prior reference patents referred to in

the court's decision, defendant had a license under the Wintermute patent 2,221,338 and owned the Ransburg patent 2,334,648, the Pugh patent 1,855,869 having previously expired.

R. A. 73. Does the defendant admit that its licensing program with respect to the use of an electrostatic field in the dispersing and depositing of an oil coating was urged as part of its commercial success picture in the aforesaid law suit, *Miller* v. *Weeks*, No. 1730-53, 129 F. Supp. 241?

73. No. But Defendant admits that it relied upon its oil-coating licenses as evidence of commercial success in such suit.

R. A. 75. Does the defendant admit for the purpose of this law suit that the electrostatic deposition process of its patent 2,685,536 can be used for the atomization, dispersion and deposition of a lubricant or oil coating on an article?

75. No, but defendant admits that the process of its patent 2,685,536 can be used for the atomization, dispersion, and deposition of a lubricant or oil coating on an article.

R. A. 79. (a) The William A. Starkey et al application Serial No. 556,390 referred to in the E. M. Ransburg patent No. 2,658,009, which was issued November 3, 1953 from an application filed May 13, 1948 and was entitled "Electrostatic Coating Method and Apparatus," is the same parent application from which both of the Starkey et al patents Nos. 2,685,536 and 2,794,417 in suit were based, and

(b) the process of said Ransburg Patent No. 2,658,009 is dominated by claims in suit of the Starkey process Patent No. 2,685,536,

(c) the apparatus disclosed in said Ransburg Patent No. 2,658,009 is dominated by Claim 4 of the Starkey apparatus Patent 2,794,417 in suit.

79. (a) Admitted.

(b) Defendant admits that certain aspects of the

process of said Ransburg Patent No. 2,658,009 are regarded by Defendant as dominated by claims in suit of the Starkey Process Patent No. 2,685,536; otherwise denied.

(c) Defendant admits that certain features of one form of apparatus disclosed in said Ransburg Patent No. 2,658,009 are regarded by Defendant as dominated by Claim 4 of the Starkey Apparatus Patent No. 2,794,417 in suit; otherwise denied.

R. A. 80. (a) The specific apparatus for electrostatic coating shown in the drawings of the Ransburg Patent No. 2,658,009 making use of a secondary electrostatic field between the jet propelling nozzle and the article has never been commercialized by the defendant,

(b) but the defendant has commercialized the "general process" of the Ransburg Patent 2,658,009 in its licensing and leasing of its No. 2 airless electrostatic coating system.

80. (a) Defendant admits that it has never commercialized any apparatus exactly corresponding to any specifically disclosed in the Ransburg Patent No. 2,658,009; otherwise denied.

(b) Defendant has commercialized the process of Patent No. 2,658,009 to the extent that certain of its customers use a secondary electrostatic field to shape the spray; otherwise denied.

Int. 41. (a) When did the defendant first publicly demonstrate its electrostatic airless spray coating process,

(b) where and

(c) to whom was same first demonstrated?

41. (a) July 26, 1951.

(b) 1234 Barth Avenue, Indianapolis, Indiana

(c) Approximately 25 representatives of trade journals. Prior to the date in (a) above, private demonstrations were given to selected individuals on various occasions.

Int. 47. (a) In the light of depositions taken by defendant herein, will the defendant contend that there was

any confidential or secret disclosure of the subject matter of the application from which Starkey Patent 2,685,536 issued to representatives of the Plaintiff prior to the issuance of the Starkey patent and, if so, • • •

47. (a) No.

R. A. 10. That Defendant notified Plaintiff that Plaintiff should not sell its emitter or sprayer shown in Plaintiff's Drawing SK-661 (Exhibit E) for electrostatic coating to any party who was not a licensee of Defendant.

10. Admitted.

R. A. 8. That the airless electrostatic coating system used by Plaintiff, the use of which is alleged to infringe the patent in suit comprises at least these elements: (1) an electrical power pack (2) a liquid emitter or sprayer of the type shown in Plaintiff's drawing SK-661 (Exhibit E) (3) a container for supplying coating liquid to be applied (4) electrical wiring connecting the emitter to the power pack for energizing the emitter and (5) conduit for directing liquid from the container to the emitter.

8. Admitted.

R. A. 9. That the acts of Plaintiff alleged to infringe are (1) the use of the emitter or sprayer shown in Plaintiff's drawing SK-661 (Exhibit E) for airless electrostatic coating in Plaintiff's plant and • • •

9. (1) Admitted.

R. A. 7. That electrical power packs, containers for liquid or paint, electrical wiring, and conduits for conveying liquids are available on the open market.

7. Admitted, except that no electrical power packs then available on the open market were deemed by Defendant's predecessor free from danger when used for electrostatic spray painting.

R. A. 37. Does the defendant admit that it has never commercialized an electrostatic airless spraying apparatus with an applicator or emitter using

(a) spaced needles,

(b) spaced wires or

(c) mechanically spaced droplet holes?

37. Yes.

R. A. 34. Does the defendant admit that as far as its charges of infringement, none of plaintiff's spraying devices charged to be infringements employ any spaced mechanical elements in the tangible form of either needles or points?

34. Yes.

R. A. 30. Does the defendant admit that it has never commercialized by sale or lease any electrostatic sprayer apparatus of the structure shown in any one of the figures of either its earlier process patent 2,685,536 or of its later apparatus patent 2,794,417?

30. Yes.

Int. 93. As to its charge of infringement of its apparatus patent 2,794,417 does defendant

(a) rely upon any structure used by plaintiff not already embraced in the charge of infringement under defendant's method patent No. 2,685,536, and

(b) if the answer is in the affirmative, what is the additional structure which is relied upon by defendant?

93.

(a) No.

(b) No answer required.

R. A. 36. Does the defendant admit that in the case of each of the applicators or emitter heads illustrated in the drawings of both of its two patents in suit, there is provided in every instance mechanical structure either in the form of edges of spaced openings, spaced needle points or spaced strands of wire, for defining spaces through which droplets of liquid material emerge from the head?

36. No, however defendant admits that in every instance mechanical structure is provided for defining spaces through which liquid material emerges.

R. A. 2. That Defendant has never licensed for commercial use any airless electrostatic spray coating system employing non-rotating applicator head identical or substantially identical to the applicator heads shown in the drawings of the Starkey and Ransburg Patent 2,685,536 in suit.

2. Admitted.

R. A. 69. Does the defendant admit that its airless No. 2 electrostatic coating system has been used for spraying liquid materials in which

(a) paint, * * *

(f) alcohol containing coating materials, or

(g) water containing coating materials is included?

69.

(a) Yes.

(f) Yes.

(g) Yes.

Int. 21. (a) What is the lowest voltage the defendant has ever used in conjunction with *airless* electrostatic spraying equipment at which it obtained atomization of the particular liquid being sprayed.

(b) When and

(c) where was such spraying conducted?

21. (a) Defendant has electrostatically atomized conventional liquid coating materials commercially at a voltage as low as approximately 20,000 volts.

(b) December, 1955 and subsequently.

(c) 1234 Barth Avenue, Indianapolis, Indiana and subsequently at other places.

Int. 23. (a) Is it not a fact that the voltage at which atomization occurs in the use of defendant's aforesaid airless electrostatic spraying process depends upon the nature of the liquid being sprayed and

(b) that generally the voltage required increases with the viscosity of the liquid and

(c) what are the upper and lower limits of the voltage at which atomization can occur in the use of said process in the spraying of all different types of liquid handled thereby?

23. (a) Electrostatic atomization of a given liquid occurs over a wide range of voltages, all other conditions being the same. The size of the particles so atomized depends to an extent on the nature of the liquid, under conditions of constant voltage and with all other factors constant.

(b) The degree of atomization usually suffers i.e. the particles become larger, as the viscosity of liquid being electrostatically atomized increases, other factors being maintained constant. However, it does not follow that deterioration of atomization resulting from increases in viscosity can be overcome merely by increasing the voltage applied.

(c) As indicated in the above answer to portion (a) of this interrogatory, electrostatic atomization of a given liquid occurs over a wide range of voltages, the extreme limits of which defendant has not explored.

Int. 133. (a) Has the defendant conducted any experimentation with regard to airless electrostatic coating to determine how large or how low the number of liquid particles should be to effect a satisfactory coating and

(b) if so, when were such tests made,

(c) by whom,

(d) with what liquids and

(e) what if any was the range of size of particles developed by such tests?

(a) No.

(b), (c), (d) and (e) No answer required.

Int. 135. Does the defendant in its No. 2 airless electrostatic system (which it relies upon for commercial success as to its Starkey et al patents in suit),

(a) create an electrostatic charge differential between

the particles and the article of a strength to move the particles toward the article sufficiently rapidly to deposit them thereon while still in a liquid state, and

(b) if the answer is in the affirmative, what is that "strength" in units of electrical measurement

(c) if there is an allowable range of "strength", what is it, and

(d) what is considered in units of measurement to be satisfactory for a sufficiently rapid movement of the particles toward the article?

(a) Yes.

(b) That resulting from the maintenance of an average potential gradient on the order of 8,000 volts per inch between the atomizer and the work.

(c) An allowable range of strength is such as results from maintenance of an average potential gradient of from about 5,000 volts to about 10,000 volts per inch between the atomizer and the work.

(d) That resulting from the maintenance of an average potential gradient on the order of 8,000 volts per inch between the atomizer and the work.

Int. 24. (a) Will defendant's aforesaid airless electrostatic spraying process atomize all kinds of known liquid and, if not,

(b) What are the limits of the range of liquids that can be atomized by such spraying process?

24. (a) No.

(b) Defendant does not know the limits of the range of liquids which can be atomized by said spraying process.

Int. 25. (a) Does temperature constitute a factor in the spraying of liquid by defendant's aforesaid process of airless electrostatic spraying and, if so,

(b) To what extent and

(c) if a range of temperatures in involved, what is the range?

25. (a) Temperature of the liquid constitutes a factor in the spraying of the liquid in defendant's process of airless electrostatic spray coating.

(b) To the extent that it influences viscosity.

(c) Defendant has not explored the limits of the range of temperatures involved.

Int. 26. In the use of defendant's aforesaid process of airless electrostatic spraying, when is a liquid particle a discrete particle from the standpoint of the practice of defendant's process?

26. In the use of defendant's process of airless electrostatic spray coating, the liquid particle formed as a result of atomization are discrete particles since they are separate, individually distinct, minute entities.

Int. 29. Can the aforementioned Starkey patented process produce a coating of paint on an object which is held stationary with respect to the atomizing head?

29. Yes.

Int. 134. Does the defendant in its No. 2 airless electrostatic system (which it relies upon for commercial success as to its Starkey et al patents in suit)

(a) employ an electrostatic atomizing head from which liquid particles are emitted in an electrostatic field of sufficient strength to charge the particles for deposition on an article, and

(b) if the answer is in the affirmative, what "strength" in terms of units of electrical measurement is considered "sufficient" in such system, and

(c) if there is a range of "strength," what is that range?

(a) Yes, in the sense that the atomizing head supports the liquid from which the particles are atomized.

(b) An average potential gradient on the order of 8,000 volts per inch between the atomizer and the work.

(c) From about 5,000 volts to about 10,000 volts per inch average potential gradient.

Int. 136. Does the defendant in its No. 2 airless electrostatic system (which it relies upon for commercial success as to its Starkey et al patents in suit),

(a) use an atomizing applicator head to form liquid into a body having a plurality of closely spaced aligned exposed termini of relatively small area, and

(b) if the answer is in the affirmative, how close in terms of measurement do the termini have to be spaced for satisfactory coating, and

(c) if there is an allowable range of closeness, what is the same, and

(d) what is considered, in such system in terms of units of measurement, to be a "relatively small area"?

(a) Yes.

(b) In most cases, less than one-tenth inch apart.

(c) An allowable range is from one-tenth to one-hundredth of an inch.

(d) The area of a terminus having a diameter of a few thousandths of an inch.

Int. 138. Does the defendant in its No. 2 airless electrostatic system (which it relies upon for commercial success to its Starkey et al patents in suit),

(a) provides for the moving of an article past and in spaced relation to a zone of atomization, and

(b) if the answer is in the affirmative, at what rate in terms of units of measurement must the article be moved to effect satisfactory coating, and

(c) what space must there be present between the article being moved and the zone of atomization, and

(d) if there is a range of dimensions as to either of the foregoing (b) and (c) what is that range?

(a) No, but defendant's customers do.

(b) At a rate which will result in the desired coating and which depends on the rate of coating material atomization.

(c) Enough space to prevent sparking between the atomizer and the work at the voltage maintained.

(d) Since the rate of article movement depends upon the rate of coating material atomization and since the latter rate is controlled by the customer, Defendant does not know the extremes of article speed employed by its customers. Defendant knows of one speed as low as about two and one-half feet per minute and another of over 80 feet per minute. So far as Defendant knows, the space maintained by its customers between atomizer and work varies between about five inches and about 24 inches.

Int. 137. Does the defendant in its No. 2 airless electrostatic system (which it relies upon for commercial success as to its Starkey et al. patents in suit),

(a) have means for feeding liquid in a relatively narrow stream to an applicator head and means at the head for spreading the stream to form it into a body of liquid coating material having an extent many times the maximum cross-sectional dimension of the stream, and

(b) if so, in terms of measurement, what does "many times" comprise, and

(c) if there is a range, for said "many times", what is that range?

(a) Yes.

(b) About 25 or more.

(c) From about 25 to 300.

Int. 140. Does the defendant in its No. 2 airless electrostatic system (which it relies upon for commercial success as to its Starkey et al. patents in suit),

(a) distribute dispersed particles of liquid over an area having each of its dimensions many times greater than the minimum cross-sectional dimension of the stream at the points or termini of atomization, and

(b) if the answer is in the affirmative, what is the minimum cross-sectional dimension of the stream, and

(c) how many times greater than said minimum dimension is the area over which it is distributed, and

(a) Yes.

(b) Usually about two to four thousandths of an inch.

(c) Each dimension of the area over which the dispersed particles of liquid are distributed is usually several hundred times the minimum cross-sectional dimension of the stream.

Int. 142. Does the defendant in its No. 2 airless electrostatic system (which it relies upon for commercial success as to its Starkey et al. patents in suit),

(a) have a high enough voltage gradient to establish a corona discharge when liquid is not being fed to the atomizing field, and

(b) when liquid is being fed to the field, does the atomizing of the liquid occur generally in the area where the corona discharge would normally occur, and

(c) is that area generally at or in close proximity to a sharp edge on an applicator head?

(a) Yes.

(b) Yes.

(c) Yes.

Int. 144. In defendant's No. 2 airless electrostatic system (which it relies upon for commercial success as to its Starkey et al. patents in suit),

(a) is there in every instance completely quiescent air between the points or termini of atomization and the article being coated, and

(b) if the answer is in the affirmative, is the air quiescent throughout the entire space separating the atomization point and the article, and

(c) does the centrifugal action of the atomizing head in the No. 2 system cause any turbulence whatsoever of air between the head and the article?

144.

(a) Yes, as "quiescent" is defined in the file wrapper of Patent No. 2,685,536 in suit.

(b) Yes.

(c) The rotation of the atomizing heads in commercial No. 2 systems creates some movement or flow of air in the region between the head and the article; but Defendant does not know whether that flow is turbulent or whether it is smooth.

Int. 145. Does the defendant in its No. 2 airless electrostatic ssytem (which it relies upon for commercial success as to its Starkey et al. patents in suit),

(a) atomize and disperse particles toward a surface to be coated spaced a substantial distance from the atomizing head, and

(b) if so, what is considered to be a substantial distance in terms of units of distance, and

(c) if there is a range for such distance, what is that range?

145.

(a) Yes.

(b) In systems currently in use, the minimum distance between the atomizing head and the surface to be coated is about five inches, which distance is regarded as substantial.

(c) In systems currently in use, the distance ranges from about five inches to about two feet.

Int. 146. Does the defendant in its No. 2 airless electrostatic system (which it relies upon for commercial success as to its Starkey et al. patents in suit),

(a) employ a plurality of aligned mechanical closely spaced points in an atomizing head for atomizing and dispersing liquid material, and

(b) if so, how close must the points be spaced in terms of units or distance to be sufficiently closely spaced for effecting coating of the articles?

146.

(a) No.

(b) No answer required.

Int. 149. Does the defendant in its No. 2 airless electrostatic system (which it relies upon for commercial success as to its Starkey et al. patents in suit),

(a) provide any separate mechanical means, such as tangible or physical points, for dividing the spray particles into finely divided discrete spray particles, and

(b) if not, is there any physical means in the atomizing head itself to divide or preset the spray particles into finely divided discrete particles, and

(c) if so, how is that done?

140.

(a) No.

(b) No.

(c) No answer required.

R. A. 25. Does the defendant admit that in connection with its earlier application, Serial No. 556,390, from which its process Patent No. 2,685,536 issued, no requirement for division as between process and apparatus claims was ever made by the Patent Office?

25. Yes.

Int. 96. In any of the proceedings involving the earlier application Serial No. 556,390, from which process patent 2,685,536 issued,

(a) did the Patent Office ever make a requirement for division as between process and apparatus claims and

(b) if so, when?

96.

(a) No.

(b) No answer required.

R. A. 26. Does the defendant admit that following the decision of the Patent Office Board of Appeals dated December 18, 1953, in connection with the earlier application Serial No. 556,390 from which process patent No. 2,685,536 issued, it cancelled all of its apparatus claims from said application on January 27, 1954, without the Patent Office having made any requirement for division?

26. Yes.

R. A. 28. Between January 27, 1954 and June 4, 1954 does the defendant admit that it did not have pending in the Patent Office any claims on apparatus for airless electrostatic sprayer apparatus based on the disclosures of either of its process or apparatus patents Nos. 2,685,536 and 2,794,417 in suit?

28. Yes.

Int. 95. Did the defendant in connection with the prosecution of its alleged earlier application Serial No. 556,390, from which its process patent No. 2,685,536 issued, (a) ever file an appeal or a Bill of Complaint to any of the courts based on the Board of Appeal's decision dated December 18, 1953, affirming the Examiner's final rejection of apparatus claims 63, 65, 87 and 95, and

(b) if so, what was the identity and date of such proceedings, and

(c) what disposition was made of same, and

(d) when?

95. (a), (b), (c), and (d). On February 15, 1954, defendant filed in the District Court for the District of Columbia, a complaint in an action entitled "William A. Starkey, Edwin M. Ransburg, and Ransburg Electro-Coating Corp. *vs.* Sinclair Weeks, Secretary of Commerce, and Robert C. Watson, Commissioner of Patents", C. A. No. 625-54, seeking in effect reversal of the decision of the Board of Appeals of December 18, 1953, affirming the final rejection of apparatus claims 63, 65, 87 and 95 and certain method claims in said application Serial No. 556,390. On March 8, 1954, following allowance by the Patent Office on February 18, 1954, of said application as amended, such action was dismissed by stipulation.

R. A. 29. Does the defendant admit that as between January 27, 1954, and June 4, 1954, it did not have pending in the United States Patent Office any apparatus claims on an electrostatic airless sprayer apparatus

(a) of a scope comparable to that of Claim 4 of its apparatus patent 2,794,417 or,

(b) of a scope which it considered applicable to Plaintiff's SK-661 emitter apparatus?

29.

(a) Yes.

(b) No.

Int. 97. Who in the defendant organization made or approved of the decision to cancel all the apparatus claims No. 40, 44, 63, 87, 94 and 95 from the earlier application Serial No. 556,390, from which the process patent 2,685,536 issued?

97. E. M. Ransburg, Vice President.

Int. 127. (a) Did the defendant on or about March, 1954 enter into and file a stipulation of dismissal in Starkey *vs.* Weeks, C. A. 625-54 wherein it was recited: "the Examiner having found allowable the claims now presented in plaintiffs' application here in suit, and notice of Allowance thereof having issued, it is hereby stipulated that the present action be dismissed."

(b) was the application Serial No. 556,390 filed Sept. 29, 1944, from which the Starkey et al process patent No. 2,685,536 was later issued on Aug. 3, 1954, the application that was in suit referred in the stipulation and

(c) at the time of the signing and filing of such stipulation were any of the apparatus claims 63, 65, 87 and 95 of said application Serial No. 556,390 on which a patent was prayed under section 4915 in said suit allowed in such application?

(a) Yes.

(b) Yes.

(c) No.

Int. 128. Is it not a fact that at the time of the filing of the stipulation of dismissal in the month of March, 1954

(a) all of the apparatus claims including claims 40, 55, 63, 65, 87, 94 and 95 had been cancelled by an amendment dated Jan. 27, 1954, to application Serial No. 556,390 and

(b) no application of defendant was then pending in the Patent Office at the time of the dismissal embodying any such apparatus claims?

128.

(a) At the time of filing of said stipulation of dismissal in Mar. 1954, all of the apparatus claims, including claims 40, 55, 63, 65, 87, 94 and 95, of said application Serial No. 556,390 had been cancelled by an amendment dated Jan. 27, 1954, expressly without prejudice to applicant's right to file a divisional or continuation application directed to the apparatus features of their invention.

(b) Yes.

Int. 123. (a) Who in the defendant's company or employ, divulged around July or August, 1956, to its counsel (prosecuting the application from which its patent 2,794,417 issued) the subject of plaintiff's electrostatic sprayer apparatus which had been disclosed in plaintiff's letter of July 5, 1956, to defendant referred to in the complaint herein

(b) on what date,

(c) who was present at the time of disclosure, and

(d) what was the identity of any letters or record made bearing in any way on such disclosure?

123. Defendant received no letter from plaintiff dated July 5, 1956 disclosing the nature of plaintiff's sprayer, but did receive the letter dated July 25, 1956 referred to in the complaint herein, enclosing a drawing of the sprayer designated SK 661, and answers as follows with respect to said letter and sprayer:

(a) Defendant does not know who communicated to its counsel the subject matter of said sprayer.

(b) Shortly after the receipt of said letter, on or about July 26, 1956.

(c) Not now known.

(d) Defendant knows of no letters or records bearing on said disclosure.

Int. 129. Is it not a fact that following the Court's dismissal of Starkey *vs.* Weeks, C. A. 265-54, brought under Section 4915 R. S. for the grant of a patent, the defendant requested on or about Feb. 15, 1954 the impounding of the records of such suit?

129. Yes.

PLAINTIFF'S EXHIBIT IIIII.

Judgment in 92 F. Supp. 947 case.

IN THE UNITED STATES DISTRICT COURT
For the District of Massachusetts.

United States of America, *Plaintiff,* *vs.* Minnesota Mining and Manufacturing Company, Behr-Manning Corporation, The Carborundum Company, Armour and Company, Durex Abrasives Corporation and The Durex Corporation, *Defendants.*	Civil Action No. 8119.

FINAL JUDGMENT AS TO COUNT ONE.

The plaintiff, United States of America, having filed its amended complaint herein on July 5, 1949; the defendants having appeared and filed their separate answers to Count One of the amended complaint denying any violation of law; Count Two of the amended complaint having been tried and final judgment having been entered thereon on September 13, 1950; and the plaintiff and said defendants, by their respective attorneys herein, having severally consented to the entry of this Final Judgment as to Count One without trial or adjudication of any issue of fact or law herein, and without admission by any party in respect of any such issue,

Now, Therefore, before any testimony or evidence has been taken herein, and without trial or adjudication of any issue of fact or law herein, and upon consent as aforesaid of all of the parties hereto,

It Is Hereby Ordered, Adjudged and Decreed, as to Count One of the amended complaint as follows:

I.

This Court has jurisdiction of the subject matter hereof and of all parties hereto. Count One of the amended complaint states a cause of action against the defendants under Sections 1 and 2 of the Act of Congress of July 2, 1890, entitled "An Act to Protect Trade and Commerce against Unlawful Restraints and Monopolies," as amended.

II.

For purposes of this judgment,

A. "Minnesota" means the defendant Minnesota Mining and Manufacturing Company, a corporation organized and existing under the laws of the State of Delaware;

B. "Behr-Manning" means the defendant Behr-Manning Corporation, a corporation organized and existing under the laws of the State of Massachusetts;

C. "Carborundum" means the defendant The Carborundum Company, a corporation organized and existing under the laws of the State of Delaware;

D. "Armour" means the defendant Armour and Company, a corporation organized and existing under the laws of the State of Illinois;

E. "Defendants" means Minnesota, Behr-Manning, Carborundum and Armour;

F. "Coated Abrasive Products" means any non-rigid abrasive or polishing article which comprises a flexible sheet or sheetlike backing to one or both

surfaces of which there is attached by an adhesive a coating of one or more layers of abrasive or polishing grain, including rigid or non-rigid abrading or polishing articles made therefrom to be used for abrading or polishing purposes;

G. "Defined Patents" means United States letters patent, patent applications and rights under letters patent, as follows:

(1) all letters patent, rights under letters patent, and applications for letters patent, now owned or controlled by any of the defendants, and all letters patent which may issue on or result from said applications,

(2) all letters patent, rights under letters patent, and applications for letters patent, issued to, acquired, or filed by, any of the defendants during the five years following the date of the entry of this judgment, and all letters patent which may issue on or result from said applications,

(3) all divisions, continuances, reissues, or extensions of the patents and applications described above in clauses (1) and (2),

relating to Coated Abrasive Products and any method, material, equipment or process involved in the production or manufacture of Coated Abrasive Products.

III.

The provisions of this judgment applicable to any defendant shall apply to such defendant, its successors, subsidiaries, assigns, officers, directors, agents, employees and all other persons acting or claiming to act under, through or for such defendant.

IV.

Each of the patent license and cross license agreements relating in whole or in part to Coated Abrasive Products or any method, material, equipment or process involved in the production or manufacture of Coated Abrasive Products, to which any of the defendants is presently a party as licensor, including, but without limitation, the following agreements, is hereby terminated and canceled in its entirety; and each of the defendants is hereby enjoined and restrained from the further performance or enforcement of any of said agreements, or from entering into, adopting, adhering to, or furthering any agreement, arrangement, or course of conduct for the purpose or with the effect of maintaining, reviving or reinstating any of said agreements:

A. the Patent License Agreements Relating to Waterproof Sandpaper, dated as of June 1, 1949, between Minnesota, as licensor, and Armour, Behr-Manning, and Carborundum, as licensees, respectively;

B. The Patent License Agreements relating to Electrocoated Sandpaper between Behr-Manning, as licensor, and

(1) Minnesota, as licensee, dated September 19, 1932,

(2) Armour, as licensee, dated October 13, 1932, and

(3) Carborundum, as licensee, dated January 11, 1933,

each as amended by letter dated May 19, 1948;

C. the licenses granted by the Spraying Agreement dated December 6, 1935 between Armour, Behr-Manning, Carborundum and Minnesota;

D. The licenses granted by the Mechanical Orienting Agreement dated March 6, 1936 between Armour, Behr-Manning, Carborundum and Minnesota;

E. the Cross License Agreements dated as of March 17, 1943, as modified as of October 1, 1945, by and between Minnesota and Armour, Minnesota and Behr-Manning and Minnesota and Carborundum, Armour and Behr-Manning, Armour and Carborundum, and Behr-Manning and Carborundum, respectively;

F. the license agreements entered into by the defendants pursuant to said Cross License Agreements, as follows:

(1) the Adhesive Treatment License Agreements between Behr-Manning, as licensor, and

(a) Armour and Minnesota, as licensees, respectively, dated January 1, 1944,

(b) Carborundum, as licensee, dated May 1, 1945,

(c) Midwest Abrasive Company, as licensee, dated September 12, 1946;

(2) the license agreements under United States Letters Patent No. 2,358,724, dated as of January 1, 1945, between Behr-Manning, as licensor, and Armour, Carborundum and Minnesota, as licensees, respectively;

(3) the license agreements under United States Letters Patent No. 2,286,208, between Carborundum, as licensor, and

(a) Minnesota, as licensee, dated August 1, 1949,

(b) Armour, as licensee, dated February 1, 1950, and

(c) Behr-Manning, as licensee, dated August 1, 1949,

(4) the license agreements under United States Letters Patent No. 2,430,099 between Carborundum, as licensor, and

(a) Minnesota, as licensee, dated November 1, 1948,

(b) Armour, as licensee, dated March 23, 1950,

(c) Behr-Manning, as licensee, dated November 1, 1948; and

(d) Mid-West Abrasive Company, as licensee, dated March 24, 1950;

(5) the license agreements under United States Letters Patent No. 2,391,731 between Minnesota, as licensor, and

(a) Carborundum, as licensee, dated August 1, 1946, and

(b) Behr-Manning, as licensee, dated September 1, 1948, and

(6) the license agreements under United States Letters Patent Nos. 2,184,896, 2,302,711 and 2,333,035, dated as of October 1, 1945, between Behr-Manning, as licensor, and Armour and Carborundum, as licensees, respectively.

V.

Each defendant is hereby ordered and directed:

A. In so far as it now has or may acquire the power or authority to do so, to issue to any applicant (including any other defendant) making written request therefor a non-exclusive and unrestricted license or sublicense to make, use and vend Coated Abrasive Products under any, some or all of the Defined Patents, including those presently owned or controlled by defendants as listed in Schedule "A" attached hereto, without any condition or restriction whatsoever, except that:

(1) a reasonable and non-discriminatory royalty may be charged and collected;

(2) reasonable provision may be made for periodic inspection of the books and records of the licensee by an independent auditor who may report to the defendant licensor only the amount of the royalty due and payable and no other information;

(3) the license may be non-transferable;

(4) reasonable provision may be made for cancellation of the license upon failure of the licensee to pay the royalties or to permit the inspection of its books and records as provided in Paragraph A of this Section V;

(5) the license must provide that the licensee may cancel the license at any time by giving thirty (30) days' notice in writing to the licensor.

B. Within thirty (30) days after the date of application, issuance or acquisition of any of the Defined Patents, to advise this Court and the At-

torney General, in writing, of the number and date of such application, issuance or acquisition.

C. Upon any application for a license in accordance with the provisions of Paragraph A of this Section V, the defendant to whom such application is made shall advise the applicant of the royalty it deems reasonable for the Defined Patent or Patents to which the application pertains. If the defendant and the applicant are unable to agree upon what constitutes a reasonable royalty, the defendant may apply to this Court for a determination of a reasonable royalty, giving notice thereof to the applicant and the Attorney General, and shall make such application forthwith upon request of the applicant. In any such proceeding the burden of proof shall be upon the defendant to whom application is made to establish, by a fair preponderance of evidence, a reasonable royalty, and the Attorney General shall have the right to be heard thereon. Pending the completion of any such court proceeding, the applicant shall have the right to make, use and vend under the Defined Patent or Patents to which its application pertains, without the payment of royalty or other compensation, but subject to the following provisions: Such defendant may, with notice to the Attorney General, apply to the Court to fix an interim royalty rate pending final determination of what constitutes a reasonable royalty. If the Court fixes such interim royalty rate, a license shall then issue providing for the periodic payment of royalties at such interim rate from the date of the making of such application by the applicant; and whether or not such interim rate is fixed, any

final order may provide for such readjustments including retroactive or diminished royalties as the Court may order after final determination of a reasonable and non-discriminatory royalty.

D. Each license granted pursuant to this Section V shall provide that the licensee may at any time, without revoking or surrendering its license, dispute the validity, scope or enforceability of any of the patents under which the license is granted, and this judgment shall not be construed as importing any validity or value to any of such patents.

VI.

Each defendant is hereby enjoined and restrained from:

A. Making any disposition of any of the Defined Patents which deprives it of the power or authority to issue licenses or sublicenses required by Paragraph A of Section V unless it sells, transfers or assigns such Defined Patents and requires, as a condition of such sale, transfer or assignment that the purchaser, transferee, or assignee thereof shall observe the provisions of Section V of this judgment with respect to the Defined Patents so acquired and the purchaser, transferee or assignee shall file with this Court, prior to the consummation of said transaction, an undertaking to be bound by the provisions of Section V of this judgment with respect to the Defined Patents so acquired.

B. Acquiring any license, sublicense, grant of immunity or similar right under any Defined Patent to make, use and vend Coated Abrasive Products, unless such license, sublicense, grant of immunity

or similar right is non-exclusive and contains a provision that throughout its life the licensor will make available an equivalent license, sublicense, grant of immunity or similar right to any third person requesting the same, on terms and conditions at least as favorable as those accorded to said defendant.

VII.

Each defendant is hereby ordered and directed, on written request, to furnish to any licensee at the time of granting a license under Paragraph A of Section V of this judgment, upon payment of a purely nominal charge therefor, a written manual or manuals describing all the methods, processes, materials and equipment then currently used by it in commercial production or manufacture under the Defined Patents under which such applicant is licensed. Any such manual or manuals so furnished to a licensee shall be made available to all prior licensees under the same Defined Patents, excepting the other defendants herein. In the event any such licensee shall find the information set forth in any such manual inadequate to enable successful utilization by that licensee of any of the methods, processes, materials or equipment described therein, and such licensee shall so inform in writing the defendant concerned, then such defendant is ordered and directed to furnish promptly, at the actual cost thereof to the defendant, such additional written information or technical assistance as shall be reasonably necessary to the successful utilization thereof. Any such additional written information shall be made available to all other licensees under the same Defined Patents, excepting the other defendants herein.

VIII.

Subject to the provisions of Section VII of this judgment, each defendant is hereby enjoined and restrained from furnishing to any other defendant technical information relating to the production or manufacture of Coated Abrasive Products or methods, equipment, materials and processes to be used in the manufacture thereof, unless it furnishes such technical information to any other manufacturer of Coated Abrasive Products upon reasonable and non-discriminatory terms and conditions.

IX.

Each defendant is hereby enjoined and restrained from entering into, adhering to, maintaining or furthering any combination, conspiracy, contract, agreement, understanding, plan or program, directly or indirectly, with any other manufacturer of Coated Abrasive Products:

A. To fix, maintain, stabilize, determine or adhere to prices, discounts, customer classifications or other terms or conditions for the sale of Coated Abrasive Products;

B. To limit, restrict, prevent or restrain any manufacturer of Coated Abrasive Products from making or selling any kinds, types, sizes, styles, or grades of Coated Abrasive Products, or from manufacturing or producing any Coated Abrasive Products according to any standards or specifications.

X.

Nothing contained herein shall be deemed to adjudicate, determine, or affect the legality or illegality of any agreement involving relationships solely between:

A. A defendant and its subsidiaries;

B. A defendant or its subsidiaries and its parent;

C. Subsidiaries of any defendant and their subsidiaries.

XI.

For the purpose of securing compliance with this judgment and for no other purpose, duly authorized representatives of the Department of Justice shall, upon written request of the Attorney General, or an Assistant Attorney General, and on reasonable notice to any defendant, made to its principal office, be permitted subject to any legally recognized privilege, (1) access during the office hours of said defendant to all books, ledgers, accounts, correspondence, memoranda, and other records and ducuments in the possession or under the control of said defendant relating to any matters contained in this judgment, and (2) subject to the reasonable convenience of said defendant and without restraint or interference from it to interview officers or employees of said defendant, who may have counsel present, regarding any such matters, and (3) upon request the defendant shall submit such reports in writing to the Department of Justice with respect to matters contained in this judgment as may from time to time be necessary to the enforcement of this judgment. No information obtained by the means provided in this Section XI shall be divulged by any representative of the Department of Justice to any person other than a duly authorized representative of such Department, except in the

course of legal proceedings to which the United States is a party for the purpose of securing compliance with this judgment or as otherwise required by law.

XII.

Jurisdiction is retained for the purpose of enabling any of the parties to this judgment to apply to this Court at any time for such further orders and directions as may be necessary or appropriate for the construction or carrying out of this judgment or for the modification or termination of any of the provisions thereof, and for the purpose of the enforcement of compliance therewith and the punishment of violations thereof.

Dated: Boston, Mass.
November 6, 1950.

Myzanski,
United States District Judge.

Schedule "A".

Defined Patents Owned or Controlled by the Defendants.

Patent No.	Dated	Inventor/s
Armour and Company Patents:		
1,991,645	Feb. 19, 1935	Woodward
1,994,263	Mar. 12, 1935	Woodward
2,050,212	Aug. 4, 1936	Rizor
2,347,244	Apr. 25, 1944	Colt
Behr-Manning Corporation Patents:		
1,987,467	Jan. 8, 1935	Crupi
2,027,087	Jan. 7, 1936	Buckner
Reissue 20,660) Original 2,027,307)	Jan. 7, 1936	Schacht
2,027,308	Jan. 7, 1936	Schacht
2,027,309	Jan. 7, 1936	Schacht
2,082,182	June 1, 1937	Schacht
Reissue 21,852) Original 2,123,581)	July 12, 1938	Anderson
2,124,055	July 19, 1938	Courtney
2,130,753	Sept. 20, 1938	Baker
2,136,150	Nov. 8, 1938	Oglesby
2,173,129	Sept. 19, 1939	Oglesby
2,173,130	Sept. 19, 1939	Oglesby
2,173,796	Sept. 19, 1939	Oglesby
2,175,073	Oct. 3, 1939	Amstuz
2,184,896	Dec. 26, 1939	Oglesby
2,197,741	Apr. 16, 1940	Boucher
2,198,766	Apr. 30, 1940	Gallagher
2,199,752	May 7, 1940	Oglesby
2,209,715	July 30, 1940	Crupi
2,209,716	July 30, 1940	Crupi
2,217,247	Oct. 8, 1940	(Walker (Burns
2,217,525	Oct. 8, 1940	Oglesby
2,239,828	Apr. 29, 1941	Oglesby
2,245,301	June 10, 1941	Schacht
2,279,361	Apr. 14, 1942	Amstuz

Patent No.	Dated	Inventor/s
2,287,837	June 30, 1942	Smyser
2,288,624	July 7, 1942	Holmsten
2,288,625	July 7, 1942	Holmsten
2,292,991	Aug. 11, 1942	Crompton
2,294,064	Aug. 25, 1942	Amstuz
2,302,711	July 24, 1942	(Oglesby (Strain
2,305,157	Dec. 15, 1942	Ham
2,307,232	Jan. 5, 1943	Oglesby
2,318,570	May 4, 1943	Carlton
2,318,571	May 4, 1943	Carlton
2,322,156	June 15, 1943	Oglesby
2,328,577	Sept. 7, 1943	Oglesby
2,333,034	Oct. 26, 1943	(Oglesby (Reilly (Gilbert
2,333,035	Oct. 26, 1943	Oglesby
2,339,208	Jan. 11, 1944	Van der Pyl
2,358,724	Sept. 19, 1944	Manchester
2,370,636	Mar. 6, 1945	Carlton
2,375,813	May 16, 1945	Oglesby
2,375,814	May 15, 1945	Oglesby
2,376,342	May 22, 1945	Carlton
2,376,343	May 22, 1945	Carlton
2,403,018	July 2, 1946	Oglesby
2,456,985	Dec. 21, 1948	Oglesby
2,463,241	Mar. 1, 1949	Carlton
2,463,242	Mar. 1, 1949	Carlton
2,485,765	Oct. 25, 1949	Oglesby

Behr-Manning Corporation Patent Applications:

733,614	Mar. 10, 1947	Waterfield
761,750	July 18, 1947	(Webber (Timmer

The Carborundum Company Patents:

1,941,962	Jan. 2, 1934	Tone
1,944,898	Jan. 30, 1934	McKee
1,988,065	Jan. 15, 1935	Wooddell

Patent No.	Dated	Inventor/s
1,989,742	Feb. 5, 1935	Davis
1,994,283	Mar. 12, 1935	Martin
2,015,658	Oct. 1, 1935	Bezzenberger
2,033,991	Mar. 17, 1936	(Melton (Benner
2,035,521	Mar. 31, 1936	(Benner (Melton (Kirchner
2,049,535	Aug. 4, 1936	(Benner (Kirchner (Melton
2,050,992	Aug. 11, 1936	Aust
2,053,360	Sept. 8, 1936	(Benner (Melton
2,053,361	Sept. 8, 1936	(Benner (Melton
2,059,583	Nov. 3, 1936	(Jackson (Kirchner
2,071,549	Feb. 23, 1937	Mahlman
Reissue 21,552) Original 2,078,831)	Apr. 27, 1937	(Benner (Melton
2,082,916	June 8, 1937	Stratford
2,097,806	Nov. 2, 1937	Weidrich
2,108,645	Feb. 15, 1938	Bryant
2,111,006	Mar. 15, 1938	Robie
2,111,272	Mar. 15, 1938	Paulson
2,115,904	May 3, 1938	Bryant
2,124,666	July 26, 1938	(Benner (Melton
2,128,905	Sept. 6, 1938	(Benner (Melton
2,128,906	Sept. 6, 1938	(Benner (Melton
2,128,907	Sept. 6, 1938	(Benner (Melton
2,128,966	Sept. 6, 1938	Robie
2,129,661	Sept. 13, 1938	Ball
2,129,954	Sept. 13, 1938	(Martin (Upper (Aust

Patent No.	Dated	Inventor/s
2,130,194	Sept. 13, 1938	Robie
2,138,882	Dec. 6, 1938	Robie
2,141,658	Dec. 27, 1938	(Melton (Benner (Kirchner
2,152,392	Mar. 28, 1939	Tone
2,179,487	Nov. 14, 1939	(Benner (Robie
2,184,348	Dec. 26, 1939	(Kirchner (Melton (Benner
2,187,624	Jan. 16, 1940	(Melton (Benner (Kirchner
2,187,743	Jan. 23, 1940	(Kirchner (Wooddell
2,191,827	Feb. 27, 1940	(Benner (Melton
2,194,253	Mar. 19, 1940	(Benner (Melton (Kirchner
2,194,472	Mar. 26, 1940	Jackson
2,201,194	May 21, 1940	(Melton (Benner (Kirchner
2,201,195	May 21, 1940	(Melton (Benner (Kirchner
2,201,196	May 21, 1940	Williamson
2,205,276	June 18, 1940	Robie
2,209,059	July 23, 1940	Kirchner
2,209,074	July 23, 1940	Dahlstrom
2,215,210	Sept. 17, 1940	Dahlstrom
2,219,853	Oct. 29, 1940	Tone
2,223,392	Dec. 3, 1940	Smith
2,224,009	Dec. 3, 1940	Aust
2,225,877	Dec. 24, 1940	(Melton (Kirchner
2,225,937	Dec. 24, 1940	Williamson

Patent No.	Dated	Inventor/s
2,227,200	Dec. 31, 1940	Robie
2,229,490	Jan. 21, 1941	(Benner (Melton (Kirchner
2,233,175	Feb. 25, 1941	(Melton (Benner
2,250,119	July 22, 1941	Williamson
2,252,587	Aug. 12, 1941	(Tone (Martin
2,254,016	Aug. 26, 1941	(Melton (Benner (Kirchner
2,254,531	Sept. 2, 1941	(Kirchner (Melton (Benner
2,255,294	Sept. 9. 1941	(Melton (Benner (Kirchner
2,274,726	Mar. 3, 1942	Melton
2,276,328	Mar 17, 1942	(Melton (Benner (Kirchner
2,277,520	Mar. 24, 1942	(Martin (Foss
2,280,852	Apr. 28, 1942	Robie
2,286,208	June 16, 1942	Kirchner
2,288,649	July 7, 1942	Robie
2,298,318	Oct. 13, 1942	Stratford
2,309,305	Jan. 26, 1943	(Dahlstrom (Horne
2,317,650	Apr. 27, 1943	Stratford
2,320,139	May 25, 1943	Kirchner
2,321,422	June 8, 1943	Robie
2,324,426	July 13, 1943	Robie
2,324,427	July 13, 1943	Robie
2,327,218	Aug. 17, 1943	Robie
2,337,445	Dec. 21, 1943	Buell
2,339,500	Jan. 18, 1944	Martin

Patent No.	Dated	Inventor/s
2,349,365	May 23, 1944	(Martin (Aust
2,350,861	June 6, 1944	(Argy (Foss
2,351,716	June 20, 1944	Smith
2,366,926	Jan. 9, 1945	Melton
2,378,025	June 12, 1945	(Melton (Thompson
2,402,183	June 18, 1946	(Rowe (Goepfert
2,410,506	Nov. 5, 1946	(Kirchner (Ball
2,412,599	Dec. 17, 1946	Buell
2,430,099	Nov. 4, 1947	Bradley
2,431,035	Nov. 18, 1947	(Goepfert (Buell
2,431,258	Nov. 18, 1947	Kirchner
2,445,807	July 27, 1948	(Summers (Corse
2,452,793	Nov. 2, 1948	Robie
2,457,256	Dec. 28, 1948	(Melton (Benner (Kirchner
2,468,056	Apr. 26, 1949	(Goepfert (Robie
2,490,231	Dec. 6, 1949	(Robie (Ball
2,497,469	Feb. 14, 1950	Robie

The Carborundum Company Patent Applications:

142,524	Feb. 4, 1950	(Foss (Buell
186,052	Sept. 21, 1950	(Goepfert (Canfield
345,596	July 15, 1940	(Tone (Martin
469,232	Dec. 16, 1942	Robie
559,429	Oct. 19, 1944	Robie

Patent No.	Dated	Inventor/s
610,479½	Aug. 13, 1945	(Melton (Benner (Kirchner
758,282	July 1, 1947	(Robie (Mahlman

Minnesota Mining and Manufacturing Company Patents:

2,013,925	Sept. 10, 1935	Okie
2,025,249	Dec. 24, 1935	Shuey
2,030,743	Feb. 11, 1936	Carlton
2,169,277	Aug. 15, 1939	Okie
2,176,942	Oct. 24, 1939	Redman
2,186,001	Jan. 9, 1940	Bartling
2,188,341	Jan. 30, 1940	(Elbel (Seebach
2,197,629	Apr. 16, 1940	Bartling
2,202,765	May 28, 1940	Guth
2,219,263	Oct. 22, 1940	Okie
2,219,278	Oct. 22, 1940	Okie
2,220,140	Nov. 5, 1940	Bartling
2,226,553	Dec. 31, 1940	Cross
2,230,934	Feb. 4, 1941	(Carlton (Oakes
2,236,597	Apr. 1, 1941	Hatch
2,248,064	July 8, 1941	(Carlton (Miller
2,248,853	July 8, 1941	(Carlton (Mifler
2,269,415	Jan. 6, 1942	(Netherly (Anderson (Cross
2,269,416	Jan. 6, 1942	(Netherly (Anderson (Cross
2,281,558	May 5, 1942	Cross
2,287,060	June 23, 1942	Oakes
2,307,461	Jan. 5, 1943	Guth
2,310,935	Feb. 16, 1943	(Carlton (Oakes

Patent No.	Dated	Inventors
2,314,340	Mar. 23, 1943	(Brown (Clarke
2,314,349	Mar. 23, 1943	Guth
2,347,662	May 2, 1944	(Carlton (Oakes
2,357,335	Sept. 5, 1944	(Kugler (Oakes
2,357,348	Sept. 5, 1944	(Netherly (Cross
2,357,350	Sept. 5, 1944	(Anderson Oakes
2,357,823	Sept. 12, 1944	(Hatch (Clarke
2,358,313	Sept. 19, 1944	Brown
2,371,605	Mar. 20, 1945	(Carlton (Miller
2,386,780	Oct. 16, 1945	Cross
2,391,731	Dec. 25, 1945	(Miller (Reidesel
2,405,191	Aug. 6, 1946	Davis
2,414,474	Jan. 21, 1947	March
2,492,143	Dec. 27, 1949	(Gipple (Sindt

Minnesota Mining and Manufacturing Company Patent Applications:

433,028	Mar. 2, 1942	Carlton
514,982	Dec. 20, 1943	Nestor
643,730	Jan. 26, 1946	(Frigstad (Clarke
757,929	June 28, 1947	Nestor
34,804	June 23, 1948	(Cross (Netherly
39,587	July 19, 1948	(McNamara (Kugler
40,424	July 23, 1948	(Frigstad (Dahl
43,528	Aug. 10, 1948	(Cross (Netherly

Patent No.	Dated	Inventor/s
44,233	Aug. 13, 1948	Frigstad
60,772	Nov. 18, 1948	Liedl et al.
85,322	Apr. 4, 1949	Heasley
89,155	Apr. 22, 1949	Nestor
128,298	Nov. 19, 1949	(Alstad (Frigstad
128,299	Nov. 19, 1949	(Reidesel (Frigstad
131,072	Dec. 5, 1949	Reidesel
160,752	May 8, 1950	Kuzma et al.
169,756	June 22, 1950	(Cross (Netherly
172,102	July 5, 1950	Kuzma et al.

PERTINENT PORTIONS OF FILE HISTORY (DX. 5A AND 5B) OF STARKEY METHOD PATENT NO. 2,685,536.

Exhibit 5A.

Page 10 of Applicant's Amendment Filed June 28, 1945.

It is submitted that the Darrah and Pugh patents cannot be properly aggregated to build up a hypothetical anticipation of claims 7, 8, 9, 31, and 32. The spray of Darrah is discharged from the nozzle 4 through the opening in an *oppositely* charged element 8. In Pugh, the spray from gun 45 passes through an opening in a *similarly* charged element 10. Obviously, the spray-surrounding element cannot be charged both oppositely to the spray, as in Darrah, and similarly to the spray, as in Pugh. If the hypothetical aggregation is to include both Darrah's electrode 8 and Pugh's booth-wall 10, will the booth-wall be at the same potential as the electrode, will it be at the same potential as the nozzle, or will its potential differ from both? And what of the articles to be coated—will their potential be that of the annular electrode, that of the nozzle, or different from both? The answers to such questions are not found in the references, and it is therefore not apparent how the aggregation is to be effected. In such circumstances, it is submitted that the rejection on Pugh and Darrah is not well founded and that claims 7, 8, 9, 31, and 32 are allowable.

In connection with the rejection of claims on Pugh and Darrah, it is to be noted that applicants' apparatus employs a single electrostatic field to perform two functions —the production of atomization and the propulsion of the atomized particles to the article being coated. **Applicants are not claiming broadly any and all devices in which liquid is electrostatically atomized and then electrostatically propelled to and deposited upon an article to be coated.**

Pages 14 and 29 of Applicant's Board of Appeals Brief Filed January 5, 1951.

(a) increased from 80 or 100 to 200 the number of panels coated per gallon of paint used;

(b) resulted in a coating "noticeably better than that obtained" with air-atomized, electrostatically deposited paint; and

(c) could be performed "in the open factory building and without the necessity for an enclosing booth or any exhaust system" such as was necessary in the other process "to carry away the overspray."

Helmuth, Juvinall, and Simmons are, as shown by their respective affidavits, well qualified to determine and compare the efficiencies of various painting methods. Their affidavits testify that procedures employing the apparatus and method of this application are markedly more efficient than prior spray-painting procedures. The affidavits also establish that the high paint-utilization efficiencies attainable with applicants' method and apparatus permit the elimination of paint spary booths and air-exhaust systems.

The Essential Novelty of the Invention.

The heart of applicants' invention lies in the concept of employing a single electrostatic field which acts as the sole agent to atomize paint, disperse the particles formed by atomization, and deposit those particles on the work. ***That concept is unquestionably novel.*** We have here no mere substitution of one old element or step for another, no mere considerable distance in unvarying relationship, whereas in Huebner the paper support 16 or 116 never moves with the paper.

Claims 61, 65, 67, and 78 describe a construction in which the lines of force of the field sweep the surface of the article being coated, a requirement whose significance is brought out above in connection with method claim 76.

Patentability.

There can be no argument as to the novelty of the appealed claims. Their patentability, as the wording of the rejection indicates, hinges upon whether their subject matter involves invention.

The heart of applicants' invention lies in the spray-painting of articles of manufacture by the use of a single electrostatic field which will both atomize a liquid coating material, disperse the atomized particles, and then deposit those particles on the surface which is to be coated. *The references of record can be searched in vain for any disclosure or suggestion of such a coating process.* The Examiner points out how prior-art structures might be modified to render them anticipatory; but in so doing the Examiner is clearly exercising *ex post facto* wisdom. No suggestion of the proposed changes can be found within the four corners of any reference, where it must be found to negative patentability.

"Obviously," the Examiner states, "liquid coating material could be supplied through the tube 32 in Meston's Fig. 5 and through the pipes 71 in Figs. 18 and 19." But, bearing in mind that Meston was concerned entirely with the deposit of

• • • • •

Exhibit 5B.

Affidavit of Gilbert Isgrigg filed March 20, 1953.

STATE OF INDIANA,
COUNTY OF BARTHOLOMEW. } ss:

Affidavit.

Gilbert Isgrigg, of Columbus, Indiana, being first duly sworn, deposes and says as follows:

I am an engineer in the employ of Hamilton Manufacturing Corporation, of Columbus, Indiana, manufacturer of the "Cosco" line of metal chairs, stools, step stools, and utility tables.

The utility tables manufactured by my employer have sheet-metal tops measuring either 16 x 22 inches or 17 x 24 inches, and each table is provided beneath the top with one or two shelves of corresponding size.

The tops and shelves of the tables mentioned are finished by painting them; and my duties for my employer include the selection and supervision of the equipment and methods used in painting the tops and shelves of utility tables.

For a period beginning in March, 1948, and continuing through the present, the tops and shelves of Cosco utility tables were painted with the use of electrostatic painting equipment under license from Ransburg Electro-Coating Corp. of Indianapolis, Indiana. Such equipment embodied a conveyor for conveying the tops and shelves through a coating zone between two fine-wire electrodes while spray guns of conventional type employing compressed air for paint atomization directed sprays of paint into the space between each electrode and the articles moving past it.

High voltage equipment supplied by said Ransburg Electro-Coating Corp. maintained an electrostatic field between the electrodes and the work, and the paint sprays entered such field at an acute angle to the path followed by the articles.

On or about November, 1952, the aforesaid painting equipment was replaced by new equipment in which the work is conveyed past and in spaced relation to a number of atomizers maintained at an electrical potential of about 70,000 volts with respect to the work. Paint supplied at a controlled rate to such atomizers is electrostatically atomized therefrom in the form of a spray and electrostatically deposited on the work. No compressed air is used to atomize the paint or to carry it to the work. The atomizers are mounted in fixed position with respect to the path followed by the table tops and shelves, and the operation is substantially fully automatic. The atomizing devices and related equipment including the paint-supply means and the source of high voltage were supplied by said Ransburg Electro-Coating Corp.

The new equipment has resulted in a substantial saving of paint, the extent of the paint-saving depending to a degree on the color of the paint. The most commonly used paint is red in color, and with that paint the number of tops and shelves covered per gallon of paint used is, with the new equipment, more than twice what it was with the electrostatic coating equipment previously used.

In addition to the paint saving represented by the increase in the number of tops and shelves coated per gallon of paint used, the following differences exist between painting as performed with the old electrostatic coating equipment and painting as performed with the electrostatic atomizing equipment presently in use:

a. The new process results in a substantially improved distribution of paint, the distribution of paint obtained with the present equipment being substantially uniform.

b. The present equipment is able to deposit approximately twenty-five per cent more paint in a single pass of the articles through the coating zone, the conveyor speed being the same in both instances.

c. The former electrostatic process required two touch-up men operating manually directed spray guns to apply paint to areas insufficiently coated by the electrostatic coating equipment previously in use. With the present equipment, no touch-up men are needed.

d. The former electrostatic method required a water-washed spray booth and a relatively large-capacity air moving apparatus for entrapping oversprayed paint and ventilating the spray booth, whereas the present equipment requires only a low-capacity ventilating system for removing solvent-vapor and there is substantially no oversprayed paint to entrap.

e. With the former electrostatic coating equipment, an average of about eighteen man-hours were devoted nightly to the job of cleaning electrodes, the floor and walls of the booth, and the spray equipment and to removal of over-spray sediment in the water-wash tanks. With the present equipment, nightly clean-up work has been reduced sixty-five to eighty per cent.

f. The present equipment, being dependent upon electric power alone, is less subject to interruption in operation than was the prior equipment, which was dependent upon electric power, compressed air, and water supply.

g. The old electrostatic coating equipment required more frequent adjustment than does the present equipment to maintain adequate coverage and quality of finish.

GILBERT ISGRIGG.

Subscribed and sworn to before me this 10th day of March, 1953.

WALTER MILLER,
(SEAL) *Notary Public.*

My commission expires May 25, 1954.

Affidavit of Donald C. Howarth filed Mar. 20, 1953.

State of Indiana }
County of Marion } ss:

Affidavit.

Donald C. Howarth, of Indianapolis, Indiana, being first duly sworn, deposes and says as follows:

I am, and for several years have been, employed by Ransburg Electro-Coating Corp. of Indianapolis, Indiana.

My employer owns patents and patent applications relating to methods and apparatus for electrostatic spray painting, licenses manufacturers to use such methods and apparatus, and provides many of its licensees with certain portions of the equipment employed in practicing the licensed methods.

For the last several years, my duties for my employer have involved supervision of the installation of licensed methods and apparatus and supervision of all billing to licensees.

Electrostatic spray painting methods licensed by my employer have been of two general types. In one type,

hereinafter referred to as the No. 1 method, articles to be painted are moved on a conveyor past a charged electrode, or between two spaced charged electrodes, while paint sprays formed by conventional spray guns employing compressed air have been discharged into the electrostatic field between the electrode or electrodes and the articles, such sprays being directed at an acute angle to the direction of article movement. In the other process, hereinafter referred to as the No. 2 process, articles to be coated are conveyed past and in spaced relation to one or more atomizers normally maintained at an electrical potential of about 70,000 volts with respect to the work, while paint supplied at a controlled rate to such atomizers is atomized and electrostatically deposited on the work without employment of any compressed air.

The aforesaid No. 1 method was in use, and was the subject of hundreds of licenses to manufacturers, for several years prior to the introduction of the No. 2 method. Although a few licenses to practice the No. 2 method had been granted prior to the third quarter of 1951, it was not until that time that Ransburg Electro-Coating Corp. published information as to that method or embarked on any intensive effort to exploit it commercially. **Up to the present time, there are seventy-eight (78) manufacturers licensed to employ one hundred one (101) No. 2 units, and additional licenses to employ that method are being granted as rapidly as the Ransburg organization can handle engineering and supervision necessary to new installations.**

Some of the companies which now employ the No. 2 process under license from my employer are:

Aluminum Goods Manufacturing Company
Arvin Industries, Inc.
E. I. DuPont de Nemours & Company
General Electric Company
Houdaille-Hershey Corporation

Johns-Manville Corporation
Landers, Frary & Clark
Monroe Auto Equipment Company
Proctor Electric Company
Reo Motors, Inc.
Reynolds Metals Company
Speed Queen Corporation
The Studebaker Corporation
Taylor Wharton Iron & Steel Company
Thor Corporation
Whirlpool Corporation

Of the seventy-eight (78) companies licensed by my employer to use the No. 2 process, a substantial portion of them are employing it to replace the No. 1 process which my employer had previously licensed them to use.

Licenses to use the No. 2 process granted by my employer require the payment of an initial fee, varying from $5,000 to $40,000, depending upon the size and nature of the installation and the amount of equipment they ask my employer to supply, and also require the payment of subsequent monthly fees depending in amount upon the quantity of paint used.

As a result of my work, I believe I am familiar with all types of spray coating processes generally used in American industry. The aforesaid No. 2 process is the only spray coating process known to me which, in an industrial spray painting operation, can use substantially all the coating material sprayed.

DONALD C. HOWARTH.

Subscribed and sworn to before me this 12th day of March, 1953.

IRIS M. MCKENNA,
Notary Public.

My Commission expires Oct. 6, 1954

Page 15 of Applicant's Board of Appeals Brief Filed May 25, 1953.

wheels 97% of the paint was deposited on the articles. Helmuth refers to the skilled labor and overspray-collecting equipment necessary in painting refrigerator cabinets by the conventional spray-gun technique.

Gilbert Isgrigg has had experience in painting metal-table tops and shelves by applicants' method and by a method employing electrostatic deposition of air-atomized paint. His affidavit establishes that applicants' method and apparatus doubles paint-utilization efficiency, provides a heavier and more uniform coating, removes the necessity for "touch-up" men, makes possible the elimination of paint-recovery equipment, is subject to less frequent interruption of operation, reduces maintenance labor, and requires less frequent adjustment.

The affidavit of Donald C. Howarth testifies to the wide acceptance and commercial success of applicants' invention on industrial production lines. At the date of the affidavit, 78 licensees including such companies as General Electric, Dupont, and Studebaker had paid substantial initial sums and were making continuing monthly payments for the right to use 101 production units embodying the invention.

The advantages and commercial success to which the affidavits testify establish that applicants' invention possesses real worth and constitute compelling evidence that what applicants have done would have been done much earlier had it required only mechanical skill.

VI. The Prior Art.

The principal reference relied upon by the Examiner is the Formhals patent No. 2,187,306, which shows a process of making a composite thread by collecting fine fibres on a

Page 5 of Last Board of Appeals Decision of December 18, 1953 Resulting in Allowance of Method Claims in Suit.

Appeal No. 372-08

The other patents relied on by the Examiner, Althouse and Gundelfinger, show that the use of belts for conveying thread is well known in the art. These patents require no detailed description.

The Examiner has taken claim 88 as illustrative of the method claims under consideration. He contends that the only distinguishing feature of this claim over Formhals lies in the statement that the liquid is dispersed and deposited while still in a liquid state, and he holds that "such a statement adds nothing patentable to the process of Formhals but merely states what are the results desired." With reference to claims 72, 89, 91, 96, 97, and 99, the Examiner points out that these claims omit the limitation contained in claim 88 to the effect that the particles as deposited are liquid.

In controverting the rejection of the claims, the appellants contend that they were the first: "to spray paint onto an article surface by electrostatically *atomizing* it into discrete particles, electrostatically *dispersing* those particles, and electrostatically depositing them while *still liquid*," thereby eliminating the necessity for atomizing air and attaining high paint-utilization efficiencies and other advantages testified to in the affidavits filed in the present case.

We have examined these affidavits with care and we find that they establish beyond question that the spray-painting process to which the claims are directed has achieved commercial success.

The appellants further argue that:

> "it is improper to regard Formhals' stream-shattering as 'atomization' or his long fibres as 'particles'; but

FROM DEFENDANT'S EXHIBIT 6—FILE HISTORY OF STARKEY AND RANSBURG APPLICATION SERIAL NO. 434,366 FROM WHICH STARKEY ET AL. APPARATUS PATENT NO. 2,794,417 ISSUED JUNE 4, 1957.

Amendment C filed August 23, 1956 in which claim 4 in suit was presented following which allowance was entered.

IN THE UNITED STATES PATENT OFFICE.

In re application of William A. Starkey *et al.*	Apparatus for Electrostatically Coating Articles.
Serial No. 434,366 Filed June 4, 1954	Division 25.

AMENDMENT "C".

Hon. Commissioner of Patents,
Washington, D.C.

Sir:

Please enter the following amendment:

In the specification:

Page 1, line 3, after "No." insert —2,685,536—; same line, after "granted" insert —August 3, 1954—.

Page 6, line 16, after "material," add — **As illustrated in the drawings, the needles are sufficiently close together as to cause the coating material to bridge the spaces therebetween.**

C¹

In the claims:

Cancel claims 1, 9, 12, 13, 15, 16, and 17 without prejudice.

Please insert the following new claim:

---

*(4.) ~~9.~~ —~~18.~~ Apparatus for electrostatically spray-coating an article, comprising an atomizing head, means

for feeding liquid coating material to said head, means including said feeding means for distributing coating material to an extended atomizing zone where it is atomized from a plurality of spaced points, said points being sufficiently close together to permit the coating material to bridge the spaces therebetween, a support for supporting an article to be coated in spaced relation to said atomizing zone, and means including a high-voltage source for creating over the surface of the article on said support an electrostatic field capable of atomizing the coating material into finely divided, electrically charged particles and electrostatically depositing particles atomized from said atomizing zone on the article while still in liquid state, said atomizing head and support being so relatively disposed as to provide between the article and the atomizing zone a spacing great enough to permit substantial dispersion of the atomized particles by the electrostatic forces of the field.—

REMARKS.

Applicants' attorney desires to express his appreciation for the courtesies extended to him at the recent interview with the Examiner in charge of the application.

At the interview, the final rejection of the claims on the grounds stated in paper No. 9 were discussed at some length and a new claim (here submitted as claim 18) was also discussed.

It was pointed out that one of the features of the suggested new claim is the provision of feeding means which distribute coating material to an extended atomizing zone from which zone it is atomized from a plurality of spaced points with the points being so close together as to permit the coating material to bridge the spaces therebetween. Such, of course, is not the system of Formhals as, regardless of the spacing of his nozzles, the coating material being contained within the nozzle could not bridge the space therebetween.

It was suggested by the Examiner that the obviously inherent bridging of the coating material at least in the apparatus illustrated in Figures 5 and 6 be pointed out in the specification and accordingly the specification has been amended to do so.

The unallowed claims remaining in the application are proposed to be cancelled with this amendment and it was believed at the interview that an action of this nature by applicants would place the case in condition for allowance.

Therefore, withdrawal of the final rejection, entry of the present amendment, and reconsideration and allowance of the application as now presented are respectfully requested.

Respectfully submitted,

SCHROEDER, HOFGREN, BRADY & WEGNER,
WILLIAM J. STELLMAN.

Chicago, Illinois,
August 21, 1956.

In the

United States Court of Appeals

For the Seventh Circuit

SEPTEMBER TERM, 1959—APRIL SESSION, 1960

No. 12737

BINKS MANUFACTURING COMPANY, ETC.,
Plaintiff-Appellant,
v.
RANSBURG ELECTRO-COATING CORPORATION, ETC.,
Defendant-Appellee.

Appeal from the United States District Court for the Southern District of Indiana, Indianapolis Division.

July 27, 1960.

Before [redacted]ACKENBERG, KNOCH and CASTLE, *Circuit Judges.*

CASTLE, *Circuit Judge.* Binks Manufacturing Company, plaintiff-appellant, prosecutes this appeal from a judgment of the District Court holding claims 1 to 6, 8, 10 and 11 of Starkey and Ransburg method patent No. 2,685,536 and Claim 4 of Starkey and Ransburg divisional apparatus patent No. 2,794,417 valid and infringed by use of the plaintiff's electrostatic spraying emitter. The judgment order enjoined plaintiff from further infringement, granted damages, reasonable attorneys' fees and costs to defendant, and dismissed plaintiff's cross-counterclaim alleging anti-trust law violations by defendant. Ransburg Electro-Coating Corporation, defendant-appellee, is the assignee-owner of both patents.

The action originated in the District Court as a complaint for declaratory judgment which was dismissed as

moot when the defendant patentee counterclaimed charging plaintiff with infringement. Plaintiff's answer raised the issues of validity and infringement and its cross-counterclaim charged anti-trust law violations, unfair competition and misuse of patents. Substituted pleadings retained the same issues. The cause was heard on the pleadings, stipulations, admissions, answers to interrogatories, depositions, exhibits and the testimony of witnesses for the defendant.

The parties will be referred to by their original designations as plaintiff and defendant. Defendant is the patentee asserting infringement. Plaintiff is defending against that charge and affirmatively asserting anti-trust law violations.

The patents in suit relate to a method and apparatus for electrostatically coating articles with liquid coating material, including paint. There are several methods by which many articles of manufacture may be painted, including dipping, roller-coating, flow-coating and spraying. Defendant (and the predecessor partnership composed of its owners) has developed two methods of electrostatic coating. A compressed-air electrostatic system is referred to as the No. 1 Process. The patents in suit relate to an airless electrostatic system referred to as the No. 2 Process. During the year 1957 the total cost of all paint, varnish and lacquer used industrially in the United States approximated 644 million dollars. Approximately one per cent was applied by defendant's No. 2 Process and 0.6% by defendant's No. 1 Process.

In the No. 1 Process the paint is sprayed by means of compressed-air spray guns into an electrostatic field which is maintained between wires or electrodes and the conveyorized articles of manufacture so that paint particles are electrostatically charged and urged toward deposition upon the articles by the effect of the field.

In the No. 2 Process, the airless system to which the patents involved relate, the electrostatic field is maintained directly between an atomizing device and the articles on the conveyor. The liquid coating or paint is fed at a controlled rate to and distributed along the extended edge of a stationary or a rotary atomizing head. The strength of the electrostatic field at the edge is such that

the field is capable of electrostatically atomizing fine electrically charged particles from the liquid. The field disperses these particles in the form of a spray and deposits them upon the articles to be coated. Patent No. 2,685,536 is upon the method employed in such airless electrostatic coating or spray-painting and patent No. 2,794,417 is upon the apparatus employed therein. The method and device electrostatically effect atomization, dispersion and deposition in combination and under control.

The No. 1 Process reduced coating material losses due to over-spray but in many instances considerable loss persisted because the electrostatic field only partially counteracted the tendency of the compressed-air blast to carry the coating material elsewhere than to the articles to be coated or painted. The No. 2 Process eliminated the necessity of compressed-air spray guns to atomize the coating materials. In many applications it virtually eliminated over-spray, and thus paint loss or waste. It reduced labor costs for clean-up operations and substantially reduced the manufacturer's investment in spray booths, exhaust systems and related equipment.

The District Court made 94 detailed findings and 11 conclusions of law. The evidence included testimony of defendant's witnesses, including expert testimony. Consequently, insofar as the findings concern factual issues such as the use made of prior art, and the nature of the improvement made over prior art, Rule 52 (a) Federal Rules of Civil Procedure, 28 U.S.C.A. applies. The scope of our review is thus limited to a determination of whether such findings are "clearly erroneous". *Armour & Co.* v. *Wilson & Co., Inc.*, 274 F. 2nd 143, 156. If they find support in the evidence we are bound thereby.

The errors relied upon by plaintiff arise out of the District Court's findings and conclusions and its exclusion of certain evidence offered by plaintiff.

Plaintiff contends the patents are invalid for lack of invention over prior art; that the court's finding of commercial success was error because the stationary electrostatic atomizing heads shown and described in the patent were never commercialized; that the method claims in suit fail to set forth a patentable invention; that Claim 4 of the apparatus patent is invalid as constituting double

patenting; that representations of commercial success made to the patent office were false and the patents procured were therefore a fraud on the public and unenforceable; and that Claim 4 of the apparatus patent is invalid because of public use.

Prior art relied upon by plaintiff includes a description of a procedure referred to as "spinning sealing wax" in an 1850 publication entitled "Electrical Experiments" by one Francis; an 1887 article by C. V. Boys describing an experiment characterized as "electrical spinning"; 1915 and 1917 articles by Professor John Zeleny concerning the effect of electrical current on surface points of liquids and the instability of electrified liquid surfaces; Littlefield patents Nos. 1,360,654 and 1,854,475; Darrah patent No. 1,958,406; Gravley patent No. 2,359,476 and Heis patent No. 1,475,995.

The Francis and Boys articles disclose nothing more than laboratory experiments demonstrating that an electrostatic field could form threads or fibers from molten wax or other viscous material. Zeleny disclosed laboratory demonstrations of the fact that an electrostatic field is capable of exerting atomizing action from liquid surfaces. These references disclose action due to electrostatic forces. They neither disclose nor suggest the combination of steps or elements which endows defendant's method and apparatus patents with novelty and which adds to the source of useful knowledge. The Littlefield patents, at most, disclose electrostatic atomization, and like the Darrah reference which, in addition, shows projection of the atomized liquid by electrostatic force, they contain no suggestion of a spray-receiving object to attract the particles. Nor was defendant's electrostatic de-tearing process described in the cited Gravley patent suggestive of either a method or a device to apply a coating. Gravley discloses the use of electrostatic force to remove an excess of coating. In that process an article, coated, as by dipping, with an excess of liquid coating material is partially drained and then brought into association with an electrostatically charged grid. The "tears" of excess liquid at the bottom of the article are attracted to the grid by electrostatic force and leave the article. The Heis patent deals with a method and apparatus wherein gaseous substances are passed through an electrostatic field to promote chemical reaction. It suggests nothing useful in the field of the

patents here challenged. That plaintiff's accused device uses an atomizing head similar to the conductive disks disclosed by Heis does not have the effect, as plaintiff seems to urge, of suggesting defendant's novel adaptation of electrostatic atomization, dispersion and deposition to the field of spray-coating or spray-painting. None of the prior art teaches nor suggests the combined atomization, dispersion and deposition of coating material through utilization of electrostatic force.

Defendant's patents are combinations of old elements in a novel manner productive of new and useful results. The District Court was not in error in finding the defendant's method and apparatus patents impregnable as against the cited references to prior art, nor in finding they constituted a broad and basic invention. The evidence substantially supports the District Court's factual findings and it applied the correct criteria of invention. *Leeds & Catlin Company* v. *Victor Talking Machine Co.*, 213 U.S. 325, 332; *Lewyt Corporation* v. *Health-Mor, Inc.*, 7 Cir., 181 F. 2d 855, cert. den. 340 U.S. 823; *Great Atlantic & Pacific Tea Co.* v. *Supermarket Equipment Corp.*, 340 U.S. 147, 152.

The District Court's finding of commercial success was not "clearly erroneous". It was well supported by the evidence. Such a finding is not of itself determinative of the issue of invention. It cannot lend validity to a patent where invention is plainly lacking. *Goldman* v. *Bobins*, 7 Cir., 245 F. 2d 840, 844; *Great Atlantic & Pacific Tea Co.* v. *Supermarket Equipment Corp.*, 340 U.S. 147, 153. But, although not of itself decisive, commercial success is a factor which should not be ignored. *University of Illinois Foundation* v. *Block Drug Co.*, 7 Cir., 241 F. 2d 6, 11; *Technical Tape Corp.* v. *Minnesota Mining & Manufacturing Co.*, 2 Cir., 247 F. 2d 343, 348, cert. den. 355 U.S. 952.

The specific atomizing heads shown in the specifications of defendant's method and apparatus patents utilize spaced needles, spaced orifices, or spaced wire wrappings. The liquid emerging from the interior of the head is thus mechanically divided into droplets from which the atomization takes place. The defendant's commercial atomizing device utilized a rotating bell or rotating disk through which the liquid coating is fed and at the edge of which atomization takes place at a plurality of closely spaced points. However, neither the claims of the method patent

nor of the apparatus patent are limited to feeding the liquid through a plurality of orifices or points of separation obtained mechanically or structurally. And the claims not the drawings define the invention. *American Anode, Inc.* v. *Lee-Tex Rubber Products Corp.*, 7 Cir., 136 F. 2d 581. The variance in structure employed in the commercial atomizing head is not indicative that the commercial success enjoyed is not attributable to the method and apparatus patent. The revolving bell or rotating disk feeding the paint to the atomizing zone by centrifugal force is fully embraced within the general concepts of the invention and constitutes a mere improvement in the mechanics of presenting the liquid to the zone of atomization.

And what has been said in this connection on the subject of commercial success also disposes of plaintiff's contentions that because of the difference between the atomization heads shown in the drawings and those utilized in defendant's commercial system a fraud was practiced on the Patent Office in the representations made with respect to commercial success and that the alleged fraud is indicative of defendant's purpose "to monopolize wrongfully the entire field of electrostatic coating on false affidavits."

We find no merit in plaintiff's contention that the method claims fail to satisfy the requirements of the patent statute (35 U.S.C.A. §112) because they merely cite a desired result rather than the means for producing the same, and because of incompleteness due to failure to specify voltages, spacing, and liquids to which they are applicable. The process claims define the specific steps of procedure and the specifications being addressed to those skilled in the art (*Highway Appliance Co.* v. *American Concrete Expansion Joint Co.*, 7 Cir., 93 F. 2d 113) need not recite details. The pertinent portion of the statute provides:

> "An element in a claim for a combination may be expressed as a means or step for performing a specified function without the recital of structure, material, or acts in support thereof, and such claim shall be construed to cover the corresponding structure, material or acts described in the specification and equivalents thereof."

There is no requirement that quantitative values for such factors as voltage, spacing and liquid characteristics be recited. The fact that experimentation or the exercise of judgment is necessary to adapt a patented process to particular material or to obtain the particular results desired does not impair validity of the patent. *Lever Bros. Co.* v. *Procter & Gamble Mfg. Co.*, 4 Cir., 139 F. 2d 633, 638-639.

Nor does the fact that there are liquid coating materials which cannot be used in an airless electrostatic spray-coating system make defendant's claims broader than its invention. The invention is not overclaimed in being directed broadly to liquid coating materials. The liquids are the materials upon which the process acts—not the active agent. Plaintiff's reliance on *Graver Tank & Manufacturing Co., Inc.* v. *Linde Air Products Co.*, 336 U.S. 271 is ill-placed. There the fluxes were claimed and included some inoperative to provide the desired feature. The method patent here involved does not purport to claim or extend to the liquid coating materials upon which it operates.

Plaintiff asserts that Claim 4 of the apparatus patent is invalid as constituting double patenting. Its argument is predicated upon the common disclosures of Claim 1 of the method patent and Claim 4 of the apparatus patent with respect to a plurality of points "spaced to form a substantially continuous extended atomizing zone" and being "sufficiently close together to permit the coating material to bridge the spaces therebetween" and defendant's witness Miller's testimony that "in order to form a continuous atomizing zone bridging is necessary so that you will get continuous and uniform feeding to the various atomizing points or sites." But it is entirely proper to cover the same disclosure by two patents co-pending, one for the method and the other for the apparatus. *General Tire & Rubber Co.* v. *Fisk Rubber Corp.*, 6 Cir., 104 F. 2d 740, cert. den. 308 U.S. 581. Nor do the patents in suit involve double patenting of the subject matter of Ransburg patent No. 2,658,009. The latter covers a different feature, the use of an additional electrode to "shape" a spray, and in any event has a filing date later than the patents in suit.

The amendment of Claim 4 in 1956, while the apparatus patent was pending, to incude a reference to the "bridging" feature was not insertion of new matter in departure from the original applications in violation of 35 U.S.C.A. §132. The "bridging" was inherent in what the original applications disclosed. The District Court's findings as to the bridging feature are supported by the record. There is evidence that the atomizing head utilizing spaced needles provided a series of gutters between adjacent needles fed with liquid through openings present between the contacting needles, the plate and the wall of the device; that liquid or paint in the gutters would divide between the droplets formed at the tip of the needles and in so doing form a continuous web or film bridging the space.

Muncie Gear Works, Inc. v. *Outboard Marine & Mfg. Co.*, 315 U.S. 759, 768, cited by plaintiff, is not applicable. In the instant case the original application disclosed the basis for the amended claim and there is no evidence of public use more than one year before the invention was first presented to the Patent Office.

Prior to the submission of the amendment to Claim 4 plaintiff had sent a drawing of its accused device to the defendant in connection with negotiations concerning licensing. The District Court's finding that the amendment to Claim 4 was not the result of any disclosure of plaintiff's device, but was an earlier and independent development is supported by the evidence.

Plaintiff's accused method and apparatus employ a stationary electrostatic emitter, the atomizing head of which has two coaxial concentric disks spaced about 0.007 inches apart, having a knife-edge at each periphery, presented edgewise to the article. Liquid coating material or paint is supplied at a controlled rate near the center of the disks. It is formed into a film in the space between the disks and flows outward to the periphery. A spacer or shim between the disks confines the liquid film to a portion of the disk circumference. At the periphery of the disk the field draws the edge of the film into a series of closely spaced cusps and atomizes finely-divided electrically charged particles from the tips of the cusps. The field disperses the atomized particles and deposits them on the grounded article. No mechanical means is provided for spacing the cusps.

While in all the specific embodiments of the method and apparatus disclosed in the patents in suit the liquid emerges from the interior of the atomizing head through a plurality of orifices and is mechanically divided or concentrated into droplets from which the atomization takes place, the method claims are not limited to feeding the liquid through a plurality of orifices or to its concentration into droplets. Nor is Claim 4 of the apparatus patent limited to an atomizer which has a plurality of feed orifices or mechanical provisions for concentrating the liquid into droplets. The District Court's finding of infringement is supported by the testimony of defendant's expert witness concerning the features of the accused device as compared to the claims of the patents in suit. Plaintiff bases its case for non-infringement on the absence from its emitter of any physical or mechanical points. That argument fails because the claims in suit are not limited to a system including physical or mechanical points. Plaintiff's system employs the principle of the patents in suit, appropriates the substance of the invention as defined in the claims, does the same work in the same way, and accomplishes the same result. The slight change in form does not avoid infringement. The fact that there are structural differences between plaintiff's emitter and the heads specifically shown in the patents in suit is without significance in respect to infringement of the method patent. Infringement of a method patent is not dependent on the form of apparatus used. *Cochrane* v. *Deener*, 94 U.S. 780, 787-788. It is not material whether the means employed, the extended edge of the atomizer head, has physical points or is an uninterrupted edge.

On the patent branch of the case we conclude that the District Court's findings of fact are supported by the record, including expert testimony, and are not clearly erroneous. And, the District Court's conclusions of law with respect to validity and infringement are applications of correct legal criteria.

Plaintiff's cross-counterclaim alleged violation of Sections 1 and 2 of the Sherman Act (15 U.S.C.A. §1 and §2), and Section 3 of the Clayton Act (15 U.S.C.A. §14). Plaintiff's contention that the District Court erred in the dismissal of its cross-counterclaim is predicated on charges

that the District Court erroneously found and concluded that the defendant had not misused the patents in suit by reason of having combined licenses thereunder with leases of equipment and by not identifying the particular patents in the license agreements; that a cross-licensing agreement between defendant and another manufacturer was not for an unlawful purpose and its performance not a misuse of patents, nor in violation of the anti-trust law provisions, nor a damage to plaintiff; that a discontinued license-back provision in defendant's early license agreements did not constitute anti-trust law violation; and that patent procurement activities of the defendant did not violate the anti-trust law provisions.

On the record it had before it we cannot say there is clearly error in the District Court's finding and conclusion that plaintiff's domination of the airless electrostatic spraying system market is solely by virtue of the monopoly created by its patents and has not been extended or enlarged beyond its proper scope. The evidence supports a conclusion that plaintiff failed to establish that defendant has engaged in any activity beyond the exercise of rights incident to its patent monopoly.

The record establishes that defendant does not sell equipment outright nor has it licensed anyone to make and sell electrostatic spray-coating systems. Although defendant offers license agreements containing a lease of equipment the leasing arrangement is not imposed as a condition of licensing and licenses are available without equipment being leased from the defendant. The combined license-lease arrangement was therefor not illegal nor a misuse of patents under the Clayton Act. *Cf. Linde Air Products Co. v. Graver Tank & Mfg. Co.*, 7 Cir., 167 F. 2d 531, 539. Although the record discloses that customers preferred the license-lease arrangement it is not indicated that such preference was due to defendant's insistence. Nor did the evidence concerning the difference in consideration paid require a finding that it was a compelling factor. That defendant furnished replacement parts without additional charge where the licensee leased equipment does not, on the facts here involved, evidence a Clayton Act or other anti-trust law violation. *Cf. Stearns v. Tinker & Rasor*, 9 Cir., 252 F. 2d 589, 604. The monopoly of defendant's patents was not extended by the agreement to articles or supplies not covered by the patent.

The license agreement does not identify specific patents but grants a right to use an identified process for coating particular items in accordance with a system identified by a drawing. No licensee pays for or receives any license under a patent not applicable to the system. The licenses are terminable by the customer on thirty days notice. It does not appear that any attempt is made to extend a patent monopoly beyond the life of the patent, nor is the issuance of a license to use the system covered by the patents in suit conditioned on the acceptance of licenses under unwanted patents. No prohibited "package licensing" is involved. *Apex Electrical Mfg. Co.* v. *Altorfer Bros. Co.*, 7 Cir., 238 F. 2d 867, 871; *Automatic Radio Mfg. Co. Inc.* v. *Hazeltine Research, Inc.*, 339 U.S. 827.

Defendant's cross-licensing agreement with Behr-Manning does not purport to embrace the patents in suit and the evidence establishes no direct damage to plaintiff's business or property as a result thereof. Relief under plaintiff's cross-counterclaim cannot be predicated on the cross-licensing agreement. *Blaski* v. *Inland Steel Company*, 7 Cir., 271 F. 2d 853, 854-5. It is unnecessary that we consider the specific findings made by the District Court as to its validity or effects otherwise.

Between 1954 when defendant began to market its No. 2 Process on a commercial scale, and 1955 the license agreement contained license-back provisions requiring that future inventions by the licensee pertaining to method and apparatus for electrostatic atomization of liquids or to coating with electrostatically atomized liquids be licensed to defendant royalty-free, on a nonexclusive basis, with the right to sub-license. The license-back provisions were eliminated from defendant's license forms in 1955. Defendant obtained no licenses from any of its licensees pursuant to the clause and the effect of the clause on the incentive of licensees to make improvements is purely conjectural. A license-back clause is not illegal *per se*. *Transparent-Wrap Machine Corp.* v. *Stokes & Smith Co.*, 329 U.S. 637. Unlike the situations condemned in *United States* v. *General Electric Co.*, 80 F. Supp. 989 and *United States* v. *General Electric Co.*, 82 F. Supp. 753 there is no wide-spread network of such agreements between competing companies affecting an entire industry.

Plaintiff's contention that the representations made by defendant to the patent office in the procurement of the patents in suit were false has been considered in connection with the arguments addressed to the question of commercial success. It is apparent that the representations did not evidence a purpose to "monopolize wrongfully the entire field of electrostatic coating on false affidavits" in violation of anti-trust law prohibitions as urged by plaintiff.

Plaintiff asserts error based on the District Court's ruling excluding from evidence, on defendant's objection, a certified copy of a consent judgment in an action brought by the United States against the Behr-Manning Corporation and certain other manufacturers charged with conspiring by means of patent agreements to monopolize commerce in coated abrasives. This consent decree did not find or adjudicate that the agreement between defendant and Behr-Manning was a violation of anti-trust law or otherwise unlawful, and neither that agreement nor the defendant was involved in any way in that action. It was an agreed judgment not in any way binding on defendant. The defendant was neither a party nor a privy to the action. There was no error in rejecting the proffered decree.

The other claimed error relating to exclusion of evidence concerns the District Court's ruling in sustaining defendant's objection to the admission of one answer in a deposition. The answer was a voluntary statement of the witness of a conclusion, and not being within the field of expert opinion by one qualified to testify in such field, was clearly not admissible. The ruling was not error.

The District Court's allowance of attorneys' fees to defendant is not predicated on any specific finding as to the basis for such an award. Allowance of such fees should find support in a specific finding as to the exceptional circumstances justifying the award. *Apex Electrical Mfg. Co.* v. *Altorfer Bros. Co.*, 7 Cir., 238 F. 2d 867, 874. From our review of the record we are of the opinion that the facts do not justify a conclusion that there is herein presented the "exceptional case" in which attorney's fees are allowable under 35 U.S.C.A. §285. Plaintiff has long been in the spray-painting equipment

business. The controversy which precipitated the action appears to have been *bona fide*. See *Anderson Company* v. *Sears, Roebuck and Co.*, 7 Cir., 265 F. 2d 755. Plaintiff's negotiation for a license and its reluctance to supply the accused device without an indemnification agreement from the prospective customer indicate only business prudence similar to that exercised by defendant in its original acquisition of certain patents and in obtaining the cross-licensing agreement with Behr-Manning. It was the defendant who converted the declaratory judgment proceeding into a patent infringement suit at a time when the whole basis of the infringement charge was a single unit built by plaintiff and used by it experimentally and for demonstration purposes, none having been sold by plaintiff. It is our conclusion that the District Court's allowance of attorneys' fees was, on the facts presented, an abuse of discretion.

Plaintiff filed a motion in this Court to vacate the District Court's judgment and remand the cause for consideration of newly discovered evidence in the form of two patents issued to defendant subsequent to the appeal to this Court. Plaintiff relies on the provisions of Rule 60 (b) of the Federal Rules of Civil Procedure (28 U. S. C. A.). The motion was taken with the case by order entered August 14, 1959.

When an appeal from a judgment is pending a motion under Rule 60 (b) for relief from the judgment because of newly discovered evidence should be filed in the district court and that court should proceed to hear the motion. If the district court indicates that it will allow the motion the court of appeals should then be requested to remand the cause. This procedure was followed in *Zysset* v. *Popeil Bros. Inc.*, 7 Cir., 276 F. 2d 354 where we remanded for consideration of alleged newly discovered evidence on the District Court's certification that there appeared to be sufficient cause at law to warrant reopening of its judgment pursuant to Rule 60 (b). See also *Ferrell* v. *Trailmobile, Inc.*, 5 Cir., 223 F. 2d 697, 698-9; *Smith* v. *Pollin*, D.C., 194 F. 2d 349, 350 and 7 Moore's Federal Practice, 2d Ed. 336, Par. 60.30 (2).

Apart from the fact that plaintiff's motion is not properly addressed to this court it is predicated upon arguments with respect to the scope of the claims in suit similar

to those which we have found unsound in considering plaintiff's appeal. The subsequently issued patents cover the commercial form of the defendant's equipment. Their validity is not here in issue. They are at most improvements on the patents in suit. The evidence relied upon as newly discovered would not in our opinion have affected the judgment of the District Court.

The judgment of the District Court is affirmed in all respects except insofar as it allows attorneys' fees to defendant. It is reversed as to the allowance of attorneys' fees.

AFFIRMED IN PART AND REVERSED IN PART.

A true Copy:

Teste:

.....

Clerk of the United States Court of Appeals for the Seventh Circuit.

USCA 3098 The Scheffer Press, Inc., Chicago, Illinois—8-4-60—50

FILE COPY

Office-Supreme Court, U.S.
FILED
NOV 19 1960
JAMES R. BROWNING, Clerk

IN THE

SUPREME COURT OF THE UNITED STATES.

OCTOBER TERM, 1960.

No. 501.

BINKS MANUFACTURING COMPANY,
Petitioner,

vs.

RANSBURG ELECTRO-COATING CORP.,
Respondent.

RESPONDENT'S BRIEF IN OPPOSITION TO PETITION FOR WRIT OF CERTIORARI.

JAMES P. HUME,
38 South Dearborn Street,
Chicago 3, Illinois,

ELBERT R. GILLIOM,
1344 Consolidated Building,
Indianapolis 4, Indiana,

VERNE A. TRASK,
801 Hume-Mansur Building,
Indianapolis 4, Indiana,

HARRY T. ICE,
Tenth Floor, 111 Monument Circle,
Indianapolis 4, Indiana,

Attorneys for Respondent.

ST. LOUIS LAW PRINTING CO., INC., 415 N. Eighth Street. CEntral 1-4477.

INDEX.

	Page
Table of Citations	This Page
Preliminary Statement	1
Questions Presented for Review	3
Statement of the Case	4
Argument	15
Question 1	17
Question 2	24
Question 3	26
Question 4	30
Conclusion	33

Table of Citations.

American Securit Co. v. Shatterproof Glass Corp., 268 F. (2d) 769 (1959) 24, 25

Blaski v. Inland Steel Co. (C. A. 7, 1959), 271 F. (2d) 853 27

Cammeyer v. Newton, 94 U. S. 225, 24 L. Ed. 70 (1876) 21

Carbice Corp. of America v. American Patents Development Corp. et al., 283 U. S. 27, 75 L. Ed. 819, 51 S. Ct. 334 (1930) 19

Cole v. Hughes Tool Company (C. A. 10, 1954), 215 F. (2d) 924 ..... 16, 18

Charles J. Gayler v. Benjamin G. Wilder, 10 Howard 477, 13 L. Ed. 504 (1850) 21

Graver Tank & Mfg. Co. v. Linde Air Products Co., 336 U. S. 271, 93 L. Ed. 672, 69 S. Ct. 535 ..... 2, 15

Andrew H. Hammond v. Mason & Hamlin Organ Co., 92 U. S. 724, 23 L. Ed. 767 (1875) 21

Hartford-Empire Co. v. United States, 323 U. S. 386, 89 L. Ed. 322, 65 S. Ct. 373, 324 U. S. 570, 89 L. Ed. 1198, 65 S. Ct. 815 (1944) 17, 26, 29

Hazel-Atlas Glass Co. v. Hartford-Empire Co., 322 U. S. 238, 88 L. Ed. 1250, 64 S. Ct. 957 30

International Salt Co. v. United States, 332 U. S. 392, 92 L. Ed. 20, 68 S. Ct. 12 (1947) 18

Keystone Driller Co. v. General Excavator Co., 290 U. S. 240, 78 L. Ed. 293 30

Keystone Type Foundry Co. v. Fastpress Co., 272 F. 242 (C. A. 2, 1921) 21

Leitch Mfg. Co. v. Barber Co., Inc., 302 U. S. 458, 82 L. Ed. 371, 58 S. Ct. 288 (1937) 19

Linde Air Products Co. v. Graver Tank & Mfg. Co., 167 F. (2d) 531 (C. A. 7, 1948) 18

Northern Pacific Rwy. Co. v. United States, 356 U. S. 1, 2 L. Ed. (2d) 548, 78 S. Ct. 514 (1958) 18

Oxford Varnish Corp. et al. v. Aults & Wiborg Corp. (C. A. 6, 1936), 83 F. (2d) 764 19

Peller v. International Boxing Club (C. A. 7, 1955), 227 F. (2d) 593 27

Precision Instrument Mfg. Co. v. Automotive Maintenance Machinery Co., 324 U. S. 806, 89 L. Ed. 1381, 65 S. Ct. 993 30

St. Louis Street Flushing Machine Co. v. Sanitary Street Flushing Machine Co. (C. C. A. 8, 1910), 178 F. 923; (cert. den.) 219 U. S. 588, 55 L. Ed. 348, 31 S. Ct. 471 21

Sperry Products, Inc. v. Aluminum Company of America (D. C. N. D. Ohio, 1959), 171 F. Supp. 901 27

Stearns v. Tinker & Rasor, 252 F. (2d) 589 (1957) .. 17, 23

Sunday v. Novi Equipment Co., 290 Mich. 539, 287 N. W. 909 (1939) 21

Technical Tape Corp. v. Minnesota Mining & Mfg. Co. (D. C. S. D. N. Y., 1956), 143 F. Supp. 429; aff'd (C. A. 2, 1957), 247 F. (2d) 343; cert. den. 355 U. S. 952, 2 L. Ed. (2d) 529 (1958) 19

Transparent-Wrap Machine Corp. v. Stokes & Smith Co., 329 U. S. 637, 91 L. Ed. 563, 67 S. Ct. 610 (1947) 27, 28, 29

United States v. L. D. Caulk Company (D. C., Del., 1954), 126 F. Supp. 693 16

United States v. E. I. duPont de Nemours & Co. (D. C., Del., 1953), 118 F. Supp. 41 (aff'd 351 U. S. 377, 100 L. Ed. 1264, 76 S. Ct. 994) 16

United States v. General Electric Co., 80 F. Supp. 989 29

United States v. General Electric Co., 82 F. Supp. 753 29

United States v. Kohler Company (E. D., Pa., 1953), 1953-4 C. C. H. Trade Cases, Par. 67,553 19

United States v. Line Material Co., 333 U. S. 287, 308-10, 92 L. Ed. 701, 68 S. Ct. 550 (1948) 16

United States v. United Shoe Machinery Co., 274 U. S. 32, 62 L. Ed. 968, 38 S. Ct. 473 (1917) 17

United States v. U. S. Gypsum Co., 333 U. S. 364, 92 L. Ed. 746, 68 S. Ct. 525 (1948) 15

United States v. Yellow Cab Co. et al., 338 U. S. 338, 94 L. Ed. 150, 70 S. Ct. 177 (1949) 15

Rules of the Supreme Court of the United States:

Rule 19 15

Rule 23 (1) (c) 3

Rule 40 (1) (c) 4

Federal Rules of Civil Procedure, Rule 52 (a) 15

IN THE

SUPREME COURT OF THE UNITED STATES.

OCTOBER TERM, 1960.

No. 501.

BINKS MANUFACTURING COMPANY,
Petitioner,

vs.

RANSBURG ELECTRO-COATING CORP.,
Respondent.

RESPONDENT'S BRIEF IN OPPOSITION TO PETITION FOR WRIT OF CERTIORARI.

PRELIMINARY STATEMENT.

The "questions for review" stated in the petition are not presented by the Record in this case. Petitioner does not in reality seek review of the decision of law questions, but is dissatisfied with the **facts** as found below and seeks a redetermination of fact issues.

The four abstract questions (Pet., pp. 2-3) could be answered either affirmatively or negatively by this Court and still not be dispositive of any part of the case, because **all of the questions are based upon assumptions of fact either not supported by, or contrary to, the findings of the District Court, concurred in by the Court of Appeals.**[1]

For example the assumption in Questions 1 and 2 that Respondent "requires" its licensees to obtain from it unpatented equipment and services and to take a license under unwanted patents is in direct conflict with Findings 65, 66, 70, and 71 (P. A. 1001-02; 1003-04) that no such requirement has ever been imposed.

Likewise, the assumption in all four questions that Respondent is "dominating an industry" is in direct conflict with Findings 82 and 83 (P. A. 1011) that it does not dominate the industrial painting industry or even the field of electrostatic spray-coating, but that its "dominance" extends only to the limited field of **airless** electrostatic spray-coating systems by virtue of its patents held valid below, the use of which systems accounts for only approximately one per cent of the paint, varnish, and lacquer used industrially in the United States.

Questions not supported factually in the Record are academic. Certiorari is an instrument of the courtroom, not the classroom.

---

[1] The Petition makes no showing of error in the findings below, much less the "very obvious and exceptional showing of error" which this Court requires when findings have been concurred in below. *Graver Tank & Mfg. Co. v. Linde Air Products Co.*, 336 U. S. 271, 274-5, 93 L. Ed. 672, 676-7, 69 S. Ct. 535.

QUESTIONS PRESENTED FOR REVIEW.

The four "questions" upon which the Petition seeks a writ of certiorari are not "expressed in the terms and circumstances of the case" [Rule 23 (1) (c)] or presented by the Record. Each "question" misstates or disregards relevant and controlling facts, concurrently found by the courts below as follows:

1. Respondent has always been ready and willing to grant licenses under its patents without unpatented equipment or services and has never required or forced anyone to take such equipment or services as a condition to obtaining a license.

2. At no time has Respondent required any licensee or lessee to take a license under any unwanted patent.

3. The only license-back clauses were in contracts made in the early period of marketing Respondent's airless electrostatic coating systems and were eliminated from its contract forms in January, 1955. The granted-back licenses were to involve only developments related to the licensed process and were to be non-exclusive and limited to use of the developments in coating methods and apparatus. Respondent never acquired any patent right pursuant to the clause, and there is no evidence that the clause discouraged research or invention.

4. There is no evidence of fraud or misrepresentation to the Patent Office in the procurement of Respondent's patents.

STATEMENT OF THE CASE.

The "Statement of the Case" in the Petition (pp. 4-10) by no means contains "all that is material to the consideration of the questions presented" by the Petition, as required by Rule 40 (1) (c) of this Court. To the contrary, from a fragmentary recital of out-of-context portions of the Record, the Petition asserts or invites inferences which ignore and are inconsistent with the controlling facts as established by documentary evidence and testimony at the trial, and as found against the Petitioner by the District Court (P. A. 968-983; 998-1013) and concurred in by the Court of Appeals (Pet. App. 2-8).

Development by Respondent of Its Electrostatic Spray-Coating Systems.

In 1937, Harper J. Ransburg, a resident of Indianapolis, Indiana, assisted by his three sons, was engaged in the manufacture and sale of houseware items, such as canister sets, bread boxes, and similar accessories, which were painted by means of conventional compressed-air spray guns, with great loss of paint through "over-spray". The Ransburgs commenced experiments in 1937 which ultimately resulted in the development of their "No. 1

The following references are used in this Brief:

Petition for Writ of Certiorari	"Pet."
Petitioner's Appendix	"Pet. App."
Appendices in Court of Appeals:	
Plaintiff's Appendix	"P. A."
Defendant's Appendix	"D. A."
Findings of Fact	"Find."
Plaintiff's Exhibit	"Px."
Defendant's Exhibit	"Dx."

Process", in which the coating material is sprayed by means of compressed-air spray guns into a high-voltage electrostatic field, which is maintained between wires or electrodes and the conveyorized articles of manufacture, so that the paint particles are electrically charged and urged toward deposition upon the articles by the effect of the field.[2][3] This was the first commercially-used electrostatic spray-painting system and was brought onto the market by the Ransburgs in 1944, after they had formed Respondent's predecessor partnership (Find. 9; P. A. 977-78).

Although the No. 1 Process was a definite improvement over non-electrostatic air-spray coating, some overspray persisted by reason of the air blast, and the Ransburg partnership continued its research and development work, as a result of which it developed its "No. 2 Process", which eliminates the compressed-air spray gun as the atomizing device. In this process, in substance, the electrostatic field is maintained directly between the atomizing device, or head, and the articles to be painted. The coating material is fed at a controlled rate to and distributed along the edge of a stationary or rotating atomizing head, the strength of the field at the edge being such that the field is capable of electrostatically atomizing fine, electrically-charged particles from the liquid, dispersing them in the form of a spray, and depositing them upon the articles. This process virtually eliminates over-spray and

---

[2] Finds. 7-9; P. A. 976-78. H. Ransburg, P. A. 409-10; D. A. 164-67. E. Ransburg Depo., Px. KKKK, pp. 3-4; D. A. 146. Miller, D. A. 121. Px. EEEE, P. A. 854.

[3] Contrary to Petitioner's assertion (p. 6), no electrostatic atomization of the liquid occurred in the *use or operation* of this system. The cited Respondent's Admission 65 (P. A. 204) *denied* that electrostatic atomization occurred in the *use* of the system; and admitted only that "*upon shutting off the operation,*" when the flow of compressed-air ceased before the flow of paint ceased, a jet of paint was *momentarily* discharged adjacent the high potential electrodes, with the result that "some atomization" occurred.

paint loss, reduces labor costs, and substantially reduces the manufacturer's investment in spray booths, exhaust systems, and related equipment. Respondent corporation was formed by the Ransburgs in 1948 to market its electrostatic processes and began general marketing of the No. 2 system in 1951.[4, 5]

Respondent's Marketing Program.

After analyzing in its Indianapolis laboratories the finishing problems of a prospective customer, Respondent designs and demonstrates to him a system satisfying his production needs and estimates the paint savings which may be anticipated (Find. 61; P. A. 998-99). Available to the interested prospect are two types of license agreements: (1) Licensing the right to use the process and obligating Respondent to furnish on a lease basis the necessary specialized equipment, to supervise its installation, and to replace defective parts without charge, in consideration of the payment of a fixed initial fee and thereafter monthly fees representing a portion of the savings resulting from the use of the system, computed as a percentage of the cost of the coating material used in the system, subject to a monthly minimum (Find. 62; P. A. 999-1000); or (2) Licensing the use of the process without equipment,

---

[4] Finds. 7, 11; P. A. 976-79. Miller, D. A. 78-81, 82-96, 111-13; P. A. 255-56, 264-74. H. Ransburg, D. A. 170-73; P. A. 409, 430-31. Howarth, D. A. 129-30; Px. IIII, pp. 3, 4; D. A. 455-59; Px. UUUU, p. 2; D. A. 389.

[5] Although irrelevant to any question here presented, Petitioner asserts (p. 7) that the No. 2 system uses a centrifugal atomizing head and does "not effect atomization and dispersion of liquid *solely* by the electrostatic field (P. A. 350-357)." Petitioner ignores the bulk of the testimony of Witness Miller, who acknowledged that rotation of the head is necessary "to *effect painting*" with that particular system, but testified clearly that the rotation of the disc is merely an expedient for feeding the liquid appropriately to the edge of the disc and the atomizing zone (P. A. 371, 373; D. A. 118), and that the electrostatic field "has *everything* to do with," and causes, the atomization (D. A. 84-85).

service, or replacement parts, in consideration of appropriately reduced initial and monthly fees which make due and proper allowance for elimination of the equipment and related services (Finds. 63-70; P. A. 1000, 1003-04). All No. 2 system licensees have entered into the first type of agreement, providing for equipment and related services, because they desired above all a satisfactory working system which would perform as demonstrated and behind which Respondent would stand (Finds. 64, 67; P. A. 1000-01, 1002-03).

It has always been the policy of Respondent and its predecessor to make available to anyone who desired it a license to use the process without equipment and related services, and this policy has been repeatedly expressed to Respondent's personnel in written bulletins from 1947 until the filing of the instant action.[6] Although no prospect had ever expressed interest in a non-equipment license, commencing in 1953 Respondent prepared and stocked standard printed contract forms for such licenses, instructed its sales personnel to advise all prospects that they were available, and informed its existing licensees of their availability.[7, 8] Since 1953, Respondent has affirmatively in-

[6] Find. 65; P. A. 1001-02. H. Ransburg, P. A. 463-64; D. A. 178-79, 180-84, 184-85, 185-88. Dxs. 23, 24, 26, 27, 28, 29; D. A. 282-349. Px. NN, P. A. 753-55. Px. JJJ-2, P. A. 816-18. H. Ransburg Depo., Px. LLLL, p. 86; P. A. 542-43. Pleva Depo., Px. NNNN, pp. 154-58; P. A. 615-17; D. A. 267-68. E. Ransburg, D. A. 159.

[7] Find. 65; P. A. 1001-02. Dx. 26, D. A. 284-312. Px. JJJ-2, P. A. 816-18. Defendant's Answer to Interrogatory 8 (Exs. D-11, D-30 thereto), D. A. 1-5, 18-23. E. Ransburg, D. A. 156-57. Px. S, P. A. 730. Pxs. Z-1 to -7, inclusive, P. A. 731. Pxs. AA-1 to -3, inclusive. Px. CC-2. Px. LLL-2; P. A. 824. Pleva Depo., Px. NNNN, pp. 186-87; D. A. 268-69. H. Ransburg Depo., Px. LLLL, pp. 83, 86; P. A. 540-41, 542-43. H. Ransburg, D. A. 186; Dx. 27; D. A. 313-14.

[8] In referring (p. 10) to Respondent's 1953 letter to its customers advising of the availability of non-equipment licenses at reduced fees, Petitioner has omitted reference to the trial court's

formed its prospects in writing of the availability of non-equipment licenses, by stating in the initial contact through sales brochures that **when desired**, equipment will be supplied, and before execution of the license, by stating in its transmittal letter that Respondent understands that the prospect prefers the equipment-type agreement to one in which equipment and related services are not to be furnished.[9]

Whenever any prospective licensee has requested or shown interest in non-equipment license terms, Respondent has quoted them. No one has ever requested or been refused a non-equipment license, and Respondent has never required any prospective licensee to take or pay for equipment or services as a condition to obtaining a license under its patents.[10]

The License Received by Respondent's Customers.

Respondent's license agreement forms do not identify the specific patents under which the user is licensed, but grant a right or license to use a particular process to coat certain items in accordance with the specially-designed system shown in the drawing which is made a part of the agreement. The Respondent has never required any prospective licensee, as a condition to receiving a license under

finding that fifty-five of the firms receiving that letter, with knowledge of the available alternative, subsequently executed ninety-seven additional license agreements and in every case chose to have Respondent furnish the equipment and related services. (Find. 67; P. A. 1003. E. Ransburg, D. A. 159-60.)

[9] Find. 65. P. A. 1001-02. H. Ransburg, P. A. 423-24; D. A. 174, 189-90, 190-91. Px. UUUU, p. 15; P. A. 880. Px. VVVV-1, p. 14; D. A. 429. Houlberg Depo., Px. NNNN, pp. 217, 223; D. A. 272-73. Rothe Depo.; Px. NNNN, pp. 255-58; D. A. 274-76. Pxs. BB-1 to -5, inclusive, P. A. 732. Px. III-2. Px. LLL-3; P. A. 825.

[10] Finds. 66, 70; P. A. 1002, 1003-4. H. Ransburg, D. A. 191, 192-93. E. Ransburg, D. A. 159. Entire Record. Px. LLL-1; P. A. 822-24. Pleva Depo., Px. NNNN, p. 158; P. A. 617.

any patent, to take or pay for any license under any patent which did not apply to the system described in the license agreement. No prospective licensee has ever requested a license for coating under specified patents, and Respondent has never refused to grant such a license. No licensee of Respondent has at any time received or paid for a license under any patent which did not apply to the system described in the license agreement.[11]

When prospective licensees have asked Respondent to identify its patents, it has done so (P. A. 178-181). Petitioner's reference (p. 9) to Respondent's agreement with AVCO as an "example" of a studied policy to list inapplicable patents is wholly misleading. The Record shows that this was a **single, isolated instance**; that the listed patents were **inadvertently** recited as applicable; and that this error was promptly corrected when discovered (Px. XXXXX; P. A. 886; D. A. 439-41; Dx. 41; P. A. 965-67).

Patent Rights Acquired by Respondent or Its Predecessor.

(1) Detearing Process.

As a result and in settlement of interference proceedings in the United States Patent Office between a Ransburg application and that of Charles K. Gravley, the Ransburg partnership in 1943 purchased the Gravley application, upon which a patent subsequently issued relating to its "detearing" process (for electrostatically removing "tears" of paint from articles previously coated by dipping). The acquisition of this patent by the partnership and its retention by the Respondent did not damage Petitioner, who has at no time attempted to market electrostatic detearing devices (Find. 73; P. A. 1005-06).

---

[11] Find. 71; P. A. 1004. Defendant's Answer to Interrogatory 8 (Exs. D-1 to -38, inclusive), P. A. 114-51; D. A. 1-44, 431-35. H. Ransburg, D. A. 194-95. Entire record.

(2) Compressed-Air Electrostatic Coating Process.

After devoting six years of research and development to their No. 1 Process, the Ransburg partners were advised by counsel to acquire the Pugh patent from Western Electric Company, which was not using the patent in its operations. For the sole purpose of permitting them to proceed with their development and marketing of the No. 1 Process free from danger of possible infringement charges, the partners purchased this patent in 1943, subject to a license reserved to Western Electric and Bell System Companies. The Pugh patent expired on April 26, 1949.[12]

In 1940, when the Ransburg partnership was in the initial stages of marketing its No. 1 Process, it received from Behr-Manning Corporation, a leading manufacturer of sandpaper and abrasives, a written notice stating that some of the latter's patent coverage was directed to the art of "electro-deposition of paint or other liquids" and suggesting a meeting to discuss the matter. Although Behr-Manning's patents pertained in their specific aspects to the manufacture of abrasives and flock-coated articles, the partners were concerned that certain claims of those patents would expose them and their No. 1 Process licensees to infringement charges. For the sole purpose of permitting the partnership to market its No. 1 Process free from the possible risk of such charges, in 1944 the partners entered into an agreement with Behr-Manning whereby Ransburg granted to Behr-Manning an exclusive royalty-free license, with right to sublicense, under Ransburg's listed patents and applications, limited in substance to the manufacture of abrasives, flock-coated, and fiber-

[12] Ind. 72; P. A. 1005. Px. SS, P. A. 762-64. Px. SSSS (letter of April 25, 1941, par. 1, second sentence), D. A. 387-88. H. Ransburg Depo., Px. LLLL, pp. 62-63; D. A. 162-63. Px. T, P. A. 1073-80. Plaintiff's Admission 23 (b), D. A. 55. H. Ransburg D. A. 194-96. E. Ransburg Depo., Px. KKKK, p. 260; D. A. 154.

coated articles; and Behr-Manning granted to the Ransburg partnership a similar license under its listed patents and applications for use in "electrostatic propulsion, dispersion, orientation, deposition," etc., of liquid particles, but not in the manufacture of abrasives, flock-coated, and fiber-coated articles. Neither the patents in suit nor the applications therefor were involved in the agreement.[13]

Prior to the execution of this agreement, Behr-Manning was not engaged in the business of marketing electrostatic spray-painting systems, had done no development work in that field, **and was excluded therefrom by pre-existing Ransburg patents**, and said agreement did not exclude or remove Behr-Manning as an existing or potential competitor of the Ransburg partnership. The agreement did not "divide up the field" between two concerns who were engaged therein or who had a right to market systems therein, as asserted by the Petitioner (p. 7). Rather, the field was divided **by pre-existing patents.** Such patent rights as the Ransburg partnership received under the agreement permitted it to market its **compressed-air** electrostatic spray-coating systems and were not directed to the **airless** electrostatic spray-coating systems of this case.[14]

After the Behr-Manning agreement had been executed and the Ransburg partnership had given assurance to its licensees that it had an exclusive license under the listed Behr-Manning patents, Respondent learned in 1948 that as a matter of fact Behr-Manning did not have the right

---

[13] Find. 74; P. A. 1006-07. H. Ransburg, P. A. 437-39, 485-86; D. A. 197-200. Px. PPPP (letter of November 22, 1940); P. A. 862-76a; D. A. 378-85. Px. JJJJ. Dx. 21. Px. UU, P. A. 771-78. H. Ransburg Depo., Px. LLLL, pp. 66-67; D. A. 163-64.

[14] Finds. 74, 75; P. A. 1007-08. H. Ransburg, P. A. 440-41; D. A. 198-99, 206-07. Dx. 16, P. A. 1095-1103. Px. HHHHHH (patent 2,334,648). D. A. 489. Px. T, P. A. 1073-80. Px. UU, P. A. 771-78. Px. JJJJ. Dx. 21.

to grant the partnership a license under the Meston and Wintermute patents, which right was owned by Research Corporation. Thereupon, for the sole purpose of making good its assurance and protecting itself and its licensees against the possible risk of patent infringement charges, Respondent obtained by agreement with Research Corporation an exclusive license under said patents, which was converted to a non-exclusive license in 1954. These patents expired on October 26, 1954, and November 12, 1957, respectively.[15]

At no time has Petitioner attempted to secure from anyone a license under any of the patents assigned or licensed to Respondent or its predecessor pursuant to any of the aforesaid agreements, and Petitioner did not know of the existence of any of said agreements until after the commencement of this action and discovery depositions herein. None of said agreements, or any right acquired by Respondent thereunder, affected Petitioner in any way. Petitioner felt free to market compressed-air electrostatic coating systems at any time, but did not choose to do so until 1958 (Finds. 79, 81; P. A. 1010-11).

(3) Airless Electrostatic Coating Process.

Pursuant to a pre-existing consulting agreement, Respondent in 1952 received an assignment of the Simmons patent, the only patent acquired by Ransburg with relation to the airless No. 2 system from any person other than its own personnel (Find. 77; P. A. 1009). Petitioner has not contended that the acquisition of this patent in any way affected Petitioner or impeded marketing of its SK661 sprayer.

---

[15] Find. 76; P. A. 1008-09. H. Ransburg, P. A. 484; D. A. 200-01, 204. Px. UU; P. A. 771-78. Px. BBB. Dx. 21. Px. VV, P. A. 779-90. Plaintiff Admissions 25 (b), 26 (b), 27. D. A. 56-57. Px. QQQQ, D. A. 386.

The License-Back Clause.

So that Respondent and all of its licensees might share in the use of any improvements developed by licensees who had the advantage of the use of the No. 2 Process in its early field experience, the agreement forms employed by Respondent from April, 1951, to January, 1955, included a requirement, in substance, that the licensee grant back to Respondent a royalty-free, assignable, non-exclusive license, with right to sublicense, under any patents, inventions, or improvements acquired by licensee during the term of the agreement and within two years thereafter relating to airless electrostatic coating methods and/or apparatus, such license to be limited to use of the licensed subject matter in coating methods and apparatus. At the time of the trial below some of those agreements were still in effect. Respondent has never acquired any patent or patent right pursuant to said clause.[16]

Industrial Coating Methods and Position of the Parties in the Industry.

Any article which can be coated by an airless electrostatic system can be coated by means of a compressed-air electrostatic system and by non-electrostatic compressed-air guns, operated manually or automatically, the major advantage of the airless electrostatic system over the others being economic. In painting many articles of manufacture, airless electrostatic, compressed-air electrostatic, non-electrostatic air-spray systems, flow-coating, roller coating, or dipping can be and are substituted one for the other and are competitive (Find. 83; P. A. 1011).

Respondent has no monopoly in electrostatic spray-coating systems generally. Electrostatic systems using

[16] Find. 84; P. A. 1011-12. Defendant's Answer to Interrogatory 8, P. A. 46. H. Ransburg Depo., Px. LLLL, p. 37, P. A. 530. Defendant's Answer to Interrogatory 8 (Exs. D-23 to -31, inclusive), P. A. 114-144; D. A. 18-23. E. Ransburg Depo., Px. KKKK, pp. 332-34; P. A. 534-35.

compressed-air guns have been marketed since 1950 or 1951 by at least five competing firms. Petitioner, one of the two largest merchandisers of manual and automatic compressed-air painting equipment and accessories in the United States, has felt free to enter the compressed-air electrostatic field at any time, and did so in 1958 (Finds. 12, 81; P. A. 979-80, 1010-11).

Respondent dominates the marketing only of **airless** electrostatic spray-coating systems, which is by virtue of the temporary monopoly of its patents which were held valid below.[17]

Petitioner's efforts to enter this field consisted of (1) an unsuccessful attempt to sell its SK661 emitter and related equipment to Ford Motor Co., on condition that Ford indemnify Petitioner against liability to Respondent for infringing its Starkey-Ransburg process patent; and (2) an attempt by correspondence to obtain from Respondent, upon terms preferred by Petitioner, a license under that patent to make and sell equipment for use in the patented process. When this license was declined, Petitioner filed the complaint below seeking a judgment declaring the patent invalid, although it had been expressly advised by Respondent that licenses were available to Petitioner's customers to paint with Respondent's method (Finds. 17, 18; P. A. 981-83).

Approximately 0.6% of the total cost of all paint, varnish, and lacquer used industrially in the United States in 1957 was used by Respondent's No. 1 Process licensees, and approximately 1% of said total was used by its No. 2 Process licensees (Find. 83; P. A. 1011).

---

[17] Finds. 5, 82; P. A. 976-5, 1011. Counterclaim (pars. 2, 4), P. A. 1, 3. Answer to Counterclaim (pars. 2, 33), P. A. 5, 16. Cross-Counterclaim (pars. 7, 8), P. A. 32. Answer to Cross-Counterclaim (pars. 7, 8), P. A. 42. Dxs. 3, 4; P. A. 1021-35. Roche Depo., Px. LLLL., pp. 292-94; D. A. 245-46. Hedger Depo., Px. LLLL., pp. 1043-44; D. A. 258-59. Entire record.

ARGUMENT.

The Petition Ignores Controlling Findings of Fact.

The Record of this case does not present any question upon which the decision of the Court of Appeals is in conflict with any decision of any other Court of Appeals or of this Court, or otherwise merits consideration by writ of certiorari (Rule 19). Petitioner simply is dissatisfied with the facts as found against it below, and is asking this Court to overthrow these findings and to redetermine the facts, rather than to consider any decision of an issue of law.

Petitioner's request is that this Court depart from its rule that it will set aside findings of fact only "if clearly erroneous,"

> Rule 52 (a), **Federal Rules of Civil Procedure**;
> **United States v. U. S. Gypsum Co.**, 333 U. S. 364, 92 L. Ed. 746, 765-6, 68 S. Ct. 525 (1948);
> **United States v. Yellow Cab Co. et al.**, 338 U. S. 338, 339-41, 94 L. Ed. 150, 152-3, 70 S. Ct. 177 (1949);

and will not undertake to review findings of fact which have been concurred in by the Court of Appeals "in the absence of a very obvious and exceptional showing of error."

> **Graver Tank & Mfg. Co. v. Linde Air Products Co.**, 336 U. S. 271, 274-5, 93 L. Ed. 672, 676-7, 69 S. Ct. 535.

Respondent's "Dominance" Is Limited to Validly Patented Airless Systems.

All of Petitioner's "questions for review" and argument are based upon the assertion that Respondent has a "dominant position in the industry" and a "dominance of the market" (pp. 13, 17), and has been "monopolizing the market" (pp. 26, 35). This ignores and obscures the pertinent

evidence in the Record as to the limited nature of the "domination" Respondent enjoys.

The Record is clear that Respondent does not "dominate" the industrial painting industry, or even the field of electrostatic spray-coating. At least five firms have marketed compressed-air electrostatic systems in competition with Respondent's No. 1 system since 1950 or 1951, and Petitioner felt free to enter this field at any time, and did so in 1958 (Find. 81; P. A. 1010-11).

The only segment of the industry dominated in any sense by Respondent is the manufacture and use of its inventions in the limited field of **airless** electrostatic spray-coating. Such "dominance" as it does enjoy is due to its patents upon systems which are the fruit of its own research and development. This is simply the incentive "monopoly" for a limited period which is created by the patent laws in the public interest and is not condemned by the anti-trust laws.

United States v. Line Material Co., 333 U. S. 287, 308-10, 92 L. Ed. 701, 718-9, 68 S. Ct. 550 (1948);

United States v. E. I. du Pont de Nemours & Co. (D. C. Del., 1953), 118 F. Supp. 41, 214 (affirmed 351 U. S. 377, 100 L. Ed. 1264, 76 S. Ct. 994);

Cole v. Hughes Tool Company (C. A. 10, 1954), 215 F. (2d) 924, 936;

United States v. L. D. Caulk Company (D. C. Del., 1954), 126 F. Supp. 693, 705.

The courts below have adjudicated that Respondent's patents upon which this dominance is based are valid, and that the only device which Petitioner has ever attempted to market in the airless field infringes them (281 F. [2d] 252, 258), by reason of which Petitioner has at no time had any right to market its device. The Petition asks no review of the decision upon patent validity and this decision is now final and is the law of the case.

QUESTION 1.

Respondent has at no time forced or required any prospective licensee to obtain from Respondent, or to pay for, equipment, services, or replacement parts as a condition to the granting of a license. The decision of the Court of Appeals of the Ninth Circuit in Stearns v. Tinker & Rasor, 252 F. (2d) 589 (1957), is not applicable upon these facts and is not in conflict with the decision below.

Petitioner's entire argument under its Question 1 (pp. 11-25), is based upon the false assumption that Respondent has forced or required prospective licensees to obtain from it, or pay for, equipment, services or replacement parts as a condition of obtaining a license under Respondent's patents. This is not and never has been a fact; there is no evidence in the Record to support such a contention or assumption; and the evidence shows that just the opposite has always been true. It has always been a policy of Respondent and its predecessor that a non-equipment license is available to anyone who desires it, and no one has ever been refused such a license. (Finds. 65, 66, 70; P. A. 1001-02, 1003-04.) Respondent's licensees have always preferred to have it supply the equipment and the related services in order to have a working system which will perform as demonstrated by Respondent and behind which Respondent will stand. (Finds. 64, 67; P. A. 1000-01, 1002-03.)

Petitioner erroneously contends (p. 11) that combining a patent license with an equipment lease is "*per se* a violation of the anti-trust laws." This Court has recognized that there is nothing unlawful *per se* in combining a patent license and a lease:

United States v. United Shoe Machinery Co., 274 U. S. 32, 66, 62 L. Ed. 968, 989, 38 S. Ct. 473 (1917);

Hartford-Empire Co. v. United States, 323 U. S. 386, 89 L. Ed. 322, 65 S. Ct. 373 (1944).

To the same effect is

Cole v. Hughes Tool Co. (C. A. 10, 1954), 215 F. (2d) 924, 936.

Petitioner is in error also in arguing (pp. 14-15) that when a licensor has a dominant position in the market by virtue of patents any agreements combining patent licenses and equipment leases are *per se* a violation of the Clayton and Sherman Acts, citing **International Salt Co. v. United States**, 332 U. S. 392, 92 L. Ed. 20, 68 S. Ct. 12 (1947) and **Northern Pacific Rwy. Co. v. United States**, 356 U. S. 1, 2 L. Ed. (2d) 548; 78 S. Ct. 514 (1958). In each of those cases the arrangement was condemned because the licensee or lessee was denied any choice except to agree to the tied combination, unlike the instant case.

As this Court has recognized, the vice in a so-called tie-in contract lies not in offering and consummating it, but in **insisting upon it** and being unwilling to grant an alternative. In the very case cited by Petitioner, **Northern Pacific Rwy. Co. v. United States**, the Court defined an unlawful tyin arrangement as an agreement by a party to sell one product "but only on the condition that the buyer also purchases a different (or tied) product, or at least agrees that he will not purchase that product from any other supplier." In a footnote to that statement, the Court stated (p. 6, Footnote 4):

> "Of course where the buyer is free to take either product by itself there is no tying problem **even though the seller may also offer the two items as a unit at a single price**" (Emphasis supplied).

Applying this principle, in **Linde Air Products Co. v. Graver Tank & Mfg. Co.**, 167 F. (2d) 531, 539 (C. A. 7, 1948), it was stated that an illegal tie-in of equipment under the Clayton Act exists only when a party imposes "as a condition of the license" the requirement, condition,

agreement, or understanding that the other goods be taken. Similarly, in **Technical Tape Corp. v. Minnesota Mining & Mfg. Co.** (D. C., S. D., N. Y., 1956), 143 F. Supp. 429, 439; **aff'd** (C. A. 2, 1957), 247 F. (2d) 343; **cert. den.** 355 U. S. 952, 2 L. Ed. (2d) 529 (1958), and in **United States v. Kohler Company** (E. D., Pa., 1953), 1953-4 CCH Trade Cases, Par. 67,553, it is clearly stated that **"refusal to sell"** the tied product separate from the tying product **is the "first essential"** of a tie-in sale prohibited by the anti-trust laws.

Carbice Corp. of America v. American Patents Development Corp. et al., 283 U. S. 27, 75 L. Ed. 819, 51 S. Ct. 334 (1930); **Leitch Mfg. Co. v. Barber Co., Inc.**, 302 U. S. 458, 82 L. Ed. 371, 58 S. Ct. 288 (1937); and **Oxford Varnish Corp. et al. v. Ault & Wiborg Corp.** (C. A. 6, 1936), 83 F. (2d) 764 (cited by Petitioner at pp. 12, 19-20), are not in point because, in contrast to the instant case, in each of them the patent owner followed a studied policy of forcing licensees to buy unpatented materials from him in order to obtain the license.

Without foundation in the Record, Petitioner contends (p. 13) that Respondent's "dominance of the market" was aided by the 1944 agreement with Behr-Manning Corporation. Not only was this agreement entered into by Respondent for the perfectly lawful purpose of permitting it to proceed with the development and marketing of its compressed-air No. 1 Process, after Behr-Manning had called its attention in writing to certain Behr-Manning patents (Finds. 74, 75; P. A. 1006-08), but such patent rights as Respondent acquired under this agreement permitted Respondent to market its **compressed-air** electrostatic coating systems, and its patents in the **airless** field were **not involved** (Find. 74; P. A. 1006). This agreement did not "divide the field of electrostatic spraying" between the parties as claimed by Petitioner (p. 13), because

Behr-Manning was not engaged in the marketing of electrostatic spray-painting systems, had done no development work in that field, and was excluded therefrom **prior to the agreement** by pre-existing Ransburg patents (Find. 75; P. A. 1007-08).

The Behr-Manning agreement had no effect whatever upon Petitioner, for it at no time sought a license from Respondent under any of the patents involved in that agreement; had no knowledge of the existence of the agreement until after this action was filed and discovery depositions were taken; felt free to enter the compressed-air electrostatic spray-coating field at any time; and did so in 1958 (Finds. 79, 81; P. A. 1010-11).

Of no significance is Petitioner's argument (pp. 15-17) that Respondent's license agreements are not by their terms confined to the life of particular patents and "go on indefinitely." These agreements can be terminated by the licensee at any time upon thirty days' notice (Find. 62; P. A. 999). Thus, whenever the applicable patents expire, or the licensee for any reason desires to discontinue the use of the system and the payment of fees, he may terminate the agreement and be under no further obligation to pay fees.

Likewise without merit is Petitioner's contention (p. 15) that because some of Respondent's license agreements were executed prior to the issuance of its Starkey-Ransburg method patent, the Court of Appeals was wrong in concluding that Petitioner had failed to establish that Respondent had engaged in any activity beyond the license of rights incident to its patent monopoly. Respondent had applied for this patent on September 29, 1944 (P. A. 1025), long before it entered into any of the No. 2 system license agreements (Find. 11; P. A. 978-9). Years ago this Court recognized that an inventor has an "inchoate

right" to a patent which can be the subject of a valid assignment before issuance of the patent.

Charles J. Gayler v. Benjamin G. Wilder, 10 Howard 477, 493, 13 L. Ed. 504 (1850);

Andrew H. Hammond v. Mason & Hamlin Organ Co., 92 U. S. 724, 728, 23 L. Ed. 767 (1875);

Cammeyer v. Newton, 94 U. S. 225, 226, 24 L. Ed. 70 (1876).

The owner of a patent application may grant a valid license before the patent issues,

St. Louis Street Flushing Machine Co. v. Sanitary Street Flushing Machine Co. (C. C. A. 8, 1910), 178 F. 923, 926 (cert. den.), 219 U. S. 588, 55 L. Ed. 348, 31 S. Ct. 471,

and an agreement to pay royalties for the right to use an invention is valid, regardless of whether the invention is patentable or unpatentable or whether a patent application has been filed.

Keystone Type Foundry Co. v. Fastpress Co., 272 F. 242, 245 (C. A. 2, 1921);

Sunday v. Novi Equipment Co., 290 Mich. 539, 287 N. W. 909, 913 (1939).

Proceeding from the false assumption that Respondent forced prospective licensees to take unwanted equipment or services, Petitioner argues (pp. 21-25) that Respondent undertook in 1953 an ineffective "purge" of its alleged misconduct. Inasmuch as the availability of non-equipment licenses has always been Respondent's policy, there was nothing to "purge" in 1953. The letters to Respondent's customers and the preparation of standard non-equipment agreement forms in that year simply constituted an effort on the part of Respondent to be sure that all of its customers and prospective licensees knew and understood that they had this freedom of choice (H. Ransburg, P. A. 542-3).

Petitioner asserts (p. 23) that Respondent did not call as witnesses at the trial any of its licensees. Inasmuch as no evidence of forcing equipment or services was adduced, there was no occasion for Respondent to call customer witnesses on this issue. Petitioner had the burden of proving patent misuse or anti-trust violation and had access to all of Respondent's hundreds of customer files in the course of discovery. Petitioner offered deposition testimony of representatives of only three licensees, which at most tended to prove that two of them were not aware of the availability of non-equipment licenses at the time they entered into agreements with Respondent. However, these two deponents, Houlberg (P. A. 633) and Rothe (P. A. 636), expressly testified that they **did not at any time request a license** under Respondent's patents, and that **they were interested in investigating and obtaining proposals upon Respondent's equipment** (D. A. 270, 636). The other, deponent Wallin, testified that **his company was advised by letter of the availability and terms of the non-equipment license** but **elected** to have Respondent furnish the equipment and related services (P. A. 641, 643-4).

It is significant that, after Respondent furnished to Petitioner in discovery proceedings the names of all its licensees and opened its customer files to Petitioner's inspection, **Petitioner did not produce by deposition or at the trial a single customer who claimed to have been forced to take** equipment, services, or parts in order to obtain licenses to use Respondent's processes, and that the only licensee representatives whose testimony was introduced testified that they were interested in and wanted Respondent's equipment.

No Conflict With Ninth Circuit.

Upon this record of freedom of choice between equipment and non-equipment licenses the decision of the Court

of Appeals of the Ninth Circuit in **Stearns v. Tinker & Rasor**, 252 F. (2d) 589 (1957) is not applicable and is not in conflict with the decision below. There the patentee marketed a detection system consisting of a patented combination plus unpatented electrical apparatus, and the District Court found as a fact that it **would not** make the patented apparatus available except in combination with and tied to the electrical apparatus (p. 602). The Court of Appeals affirmed this finding, observing that the patentee had not been asked directly whether he refused to sell or to operate on any other basis, and that had he been asked that question there would have been no problem. The Court stated further (p. 604):

> "The mere fact that an owner of a patented article combines the article with an unpatented article and sells or leases the unit as a whole does not *per se* prove misuse. The holder of a patent can exploit his legally protected monopoly in the patent as best he sees fit, so long as in doing so he does not restrain competition in the unpatented article. Probably the best way for an owner of such a patent to protect himself from a charge of misuse would be to offer or **stand ready to offer the patented item alone**" (Emphasis supplied).

Unlike the **Stearns** case, here Respondent's officers testified specifically that it had always been Respondent's policy to make patent licenses available without equipment or related services, and that no one had ever been refused such a license, and the courts below concurred in specific findings to this effect. (Finds. 65, 66, P. A. 1001-02). Respondent has always "stood ready to offer the patented item alone."

QUESTION 2.

Respondent has not required any prospective licensee to take or to pay for any inapplicable or unwanted patent. Upon the facts of this Record the decision of the Court of Appeals for the Third Circuit in American Securit Co. v. Shatterproof Glass Corp., 268 F. (2d) 769 (1959), is inapplicable and is not in conflict with the decision below.

Respondent's standard customer agreement permits the use of a particular system designed for the individual customer's production needs and described in a drawing which is a part of the agreement, and does not list the patents which are applicable to that particular system. This is the simplest way of assuring each customer of a license under such, and only such, patents as are actually applicable to that system. No license under any inapplicable patent is granted expressly or by implication (Exs. D-29 and D-32; P. A. 137-45). If, in connection with a contemplated agreement, the prospective customer wishes to know what patents are owned by Respondent, he is furnished a list of the patent numbers (Ex. F; P. A. 174-81). Under this practice no licensee receives or pays for any license which is not applicable to his system and required for its lawful use.

Furthermore, there is absolutely no evidence in the Record that any prospective customer has at any time requested from Respondent a license under specific patents for the use[18] of any patented system, or that Respondent has refused any such request. Respondent's Vice President testified at the trial that no one had ever made any such request (H. Ransburg, D. A. 194-95).

Contrary to the statement on page 5 of the Petition, that Petitioner was "foreclosed from entering" the air-

[18] Petitioner inquired about a license to *make and sell equipment* for the process, which was refused on grounds unrelated to licenses under other patents (Find. 18; P. A. 982-83).

less electrostatic equipment market because Respondent would not permit Petitioner to sell its sprayer to anyone who did not already have Respondent's leased equipment, Respondent's letter to Petitioner of September 21, 1956 (Px. ZZZZ-13, P. A. 911-12) plainly stated:

> "... **We want you to know that licenses are available to your customers for painting with our method** ..." (Emphasis supplied.)

There never having been any requirement or compulsion by Respondent that any customer take any license that he does not need or want, there is no conflict (as claimed at page 29 of the Petition) between the decision below and that of the Third Circuit in **American Securit Co. v. Shatterproof Glass Corp.**, 268 F. (2d) 769, in which the Court held to be a misuse of patents a "stated policy" of the patentee whereby it was "**mandatory**" that a licensee take and pay for a license under patents which were **not applicable** to the licensee's intended operation, in order to obtain a license under the patents which were applicable and under which the licensee did desire a license. The Court said (p. 775) "The substantial issue presented by the appeals at bar is whether package licensing, **cumpulsory, as distinguished from voluntary**, insofar as the applicant for a license is concerned, ... constituted a misuse of patents ..." (emphasis supplied). Petitioner's argument that this case is similar to the cited case because the "agreements went on indefinitely" (p. 30) is erroneous, because all of them are terminable by the customer at any time on 30 days' notice (Find. 62; P. A. 999).

In an effort to overcome the well-supported findings in which the courts below concurred on this issue (Find. 71; P. A. 1004), Petitioner refers to Respondent's agreement with AVCO Manufacturing Company and asserts that the listing of inapplicaple patents in the agreement was "done deliberately." If Respondent had in fact had a policy of

compulsory package licensing. Petitioner, with access to all of respondent's customer files, would have been able to establish such policy by proof of more than one instance. The Record shows clearly that the recital in the AVCO agreement that the listed patents applied to the licensed system was entirely inadvertent and that this error was promptly corrected when discovered in the course of these proceedings (Px. XXXXX; P. A. 886; D. A. 439-41; Dx. 41; P. A. 965-67). The courts below properly regarded the AVCO transaction as an isolated instance of inadvertent error, rather than evidence of a practice of forcing inapplicable licenses.

QUESTION 3.

The license-back provisions in Respondent's early No. 2 system agreements were lawful and have not damaged Petitioner. Upon this Record there is no conflict between the decision below and Hartford-Empire Co. v. United States, 323 U. S. 386; 324 U. S. 570.

Commencing in 1951, during the early field experience of the No. 2 Process, Respondent's customer agreements contained a license-back clause which was eliminated from its standard license forms in January, 1955, and was not used thereafter. In substance this clause provided that Respondent would have a royalty-free, non-exclusive, assignable license, with right to sublicense, with respect to improvements or inventions made or acquired by the licensee during the term of the agreement and two years thereafter, pertaining to methods and apparatus relating to the licensed process, such license to be limited to use of the improvements and inventions in coating methods and apparatus. Respondent has never acquired any patent or patent right pursuant to the clause (E. Ransburg Depo., Px. KKKK, pp. 32-4; P. A. 534-5).

The license-back clause had absolutely no effect upon Petitioner and could not have damaged it in any way,

inasmuch as Petitioner never sought or entered into a license to use Respondent's airless system for the coating of any product[19] and never entered into any agreement containing this clause. Inasmuch as Petitioner's "cross-counterclaim" below is a private action for damages and relief under the anti-trust laws, an essential element of the action is injury or damage to the business or property of Petitioner. There having been no damage to Petitioner in its business or property as a result of the former use of this clause by Respondent, the clause in no event could constitute the basis of an action by Petitioner under the anti-trust laws.

Blaski v. Inland Steel Co. (C. A. 7, 1959), 271 F. (2d) 853, 854-5;

Peller v. International Boxing Club (C. A. 7, 1955), 227 F. (2d) 593;

Sperry Products, Inc. v. Aluminum Company of America (D. C., N. D., Ohio, 1959), 171 F. Supp. 901, 938.

Furthermore, the license-back clause was employed for a legitimate purpose, was of appropriate scope, and was lawful. This Court has held that even a clause requiring the licensee to **assign or grant back** improvement patents to the licensor is not *per se* illegal.

Transparent-Wrap Machine Corp. v. Stokes & Smith Co., 329 U. S. 637; 91 L. Ed. 563; 67 S. Ct. 610 (1947).

Respondent's clause did not require licensees to assign or turn over to Respondent their improvement inventions, but only required that Respondent and its other licensees be permitted to share in the use of such improvements through a non-exclusive license, thereby leaving the in-

---

[19] The only license ever sought by Petitioner was to make and sell equipment for use in the patented process. The license was declined on grounds unrelated to the license-back clause, which was no longer in use (Finds. 18, 84; P. A. 892-93, 1011-12; Px. ZZZZ-2 to 10, -13, P. A. 895-908, 911-12).

ventor the exclusive right to his invention in all fields except that of coating, and within the coating field the right to use his invention and to license others to use it.

Petitioner did not present at the trial the testimony of any licensee in support of its contention (p. 33) that research or development "had been stifled" by this provision. Its reference to the 1953 letter of one of Respondent's licensees to Harold Ransburg does not support this inference. From the context of the letter it is clear that when the General Electric representative who was quoted therein referred to "getting any further work done on the equipment", he was referring to research and development work by **Respondent**, not General Electric (P. A. 743-4). The testimony of Harold Ransburg referred to on page 33 of the Petition, shows affirmatively that the licensees **did** have an incentive to make improvements on the No. 2 system for the purpose of improving their own operation (P. A. 487).

On this Record, the trial court's finding (Find. 84; P. A. 1011-12) that the clause did not stifle or discourage research or invention was proper. The Court of Appeals correctly concurred, observing that the asserted effect of the clause "is purely conjectural" (Pet. App. 7), the same conclusion reached by this Court in **Transparent-Wrap** (p. 646).

Petitioner is in error in stating (p. 32) that "the Courts below erroneously and contrary to the admitted facts assumed Defendant had discontinued all its license back provisions in its outstanding agreements." The District Court specifically found that some of the license agreements containing this clause were still in effect (Find. 84; P. A. 1012). There is no indication that the Court of Appeals assumed otherwise, its opinion stating only that this provision was eliminated from Respondent's license "**forms**" in 1955 (Pet. App. 7).

Because of the legitimate purpose and limited nature of the license-back clause formerly used by Respondent and the other relevant facts in this Record, the decision below is in no respect in conflict with **Hartford-Empire Co. v. United States**, 323 U. S. 386; 324 U. S. 570, or any other decision of this Court. In **Hartford-Empire** several owners of controlling patents in the glass making industry pooled their patents and cross-licensed them as part of a proved conspiracy to control the industry, and used their patent position to allocate fields of manufacture, to limit production of glassware by a quota system, to maintain prices of unpatented glassware, and thereby to exclude everyone from the industry who did not deal with the conspirators (pp. 354-58). It was as an integral part of this conspiracy between competing patent owners and manufacturers that the grant-back provisions in the cross-licenses came under criticism. There is no evidence in the present Record, of course, which even approaches the facts upon which the **Hartford-Empire** decision was based, or upon which an anti-trust law violation might be made out within the meaning of the principles stated in **Transparent-Wrap Machine Corp. v. Stoke & Smith Co.** 329 U. S. 637 at 647-8.

Inapplicable for the same reason are Petitioner's citations (p. 35) to **United States v. General Electric Co.**, 80 F. Supp. 989, where clauses requiring **assignment** of improvement inventions to the licensor were condemned because they were an integral part of a wide-spread network of agreements **between competing companies to control the market** in certain products, the "**primary purpose**" of which "was a system of **price control** that ranged over the entire cemented carbide industry" (p. 1016); and to **United States v. General Electric Co.**, 82 F. Supp. 753, where license-back provisions were held bad because part of agreements between competitors in the manufacture of lamps which effectively controlled domestic manufacture and sale and imports of certain types of lamps.

Respondent's license-back provisions, eliminated from its standard forms in January, 1955, were of lawful purpose and scope, and in any event did not damage the business or property of Petitioner.

QUESTION 4.

The Court of Appeals properly decided that Respondent had not procured its patents fraudulently. On this Record, there is no conflict between its decision and those in Precision Instrument Mfg. Co. v. Automatic Maintenance Machinery Co., 324 U. S. 806; Hazel-Atlas Glass Co. v. Hartford-Empire Co., 322 U. S. 238; or Keystone Driller Co. v. General Excavator Co., 290 U. S. 240.

Without any justification whatever in the Record Petitioner argues that Respondent "fraudulently evolved a scheme to continue its monopolization" of a field which it dominated "by a succession of wrongfully procured invalid letters patent," which was carried out by "making false representations by affidavits to the Patent Office" (p. 37, et seq.).

The affidavits to which Petitioner refers in making this scandalous accusation (Pet. App. 76-81) were executed and submitted to the Patent Office in March, 1953, in support of the claims then pending in the application which resulted in the two patents in suit. Petitioner's alleged "succession" of wrongfully procured patents involves no others. These patents are **not** invalid, as stated by Petitioner, but have been expressly adjudicated as valid by the courts below.

There is no misrepresentation of any fact in either of the affidavits to which the Petition refers, and there is no evidence in the Record that the Patent Office was misled by anything therein. The nature of Respondent's commercial No. 2 systems, with their rotating atomizing heads (D. A. 458), was well-known at the time (Pet. App. 80-1).

Petitioner's argument that fraud was perpetrated on the Patent Office is based on the fallacious premise that the inventions claimed in the patents in suit are absent from Respondent's commercial systems. This fallacy is exposed upon correction of the misstatements in the Petition as to both the nature of those inventions and the nature of the atomizing devices in the commercial systems. The nature of the inventions is misstated when they are defined by reference to a file-wrapper statement made with respect to earlier claims which differed materially from the claims ultimately granted, which latter claims were the ones in issue when the affidavits were submitted. The nature of the commercial atomizing devices is incorrectly stated when they are described as "centrifugal atomizing" heads (p. 39), as has been pointed out above in the "Statement of the Case," footnote 5.

Both courts below gave full consideration to the circumstances upon which Petitioner's unwarranted charge of fraud is based and rejected that charge, as is evident from Findings 11, 42, 54, and 91 (P. A. 978-79, 990-91, 997, 1013) and the following portion of the opinion of the Court of Appeals which was not reproduced by Petitioner in its Appendix (Pet. App. 2-8) (281 F. [2d] 252, at 256):

> "The specific atomizing heads shown in the specifications of defendant's method and apparatus patents utilize spaced needles, spaced orifices, or spaced wire wrappings. The liquid emerging from the interior of the head is thus mechanically divided into droplets from which the atomization takes place. The defendant's commercial atomizing device utilized a rotating bell or rotating disk through which the liquid coating is fed and at the edge of which atomization takes place at a plurality of closely spaced points. However, neither the claims of the method patent nor of the apparatus patent are limited to feeding the liquid through a plurality of orifices or points of separa-

tion obtained mechanically or structurally. And the claims not the drawings define the invention. American Anode, Inc. v. Lee-Tex Rubber Products Corp., 7 Cir., 136 F. 2d 581. The variance in structure employed in the commercial atomizing head is not indicative that the commercial success enjoyed is not attributable to the method and apparatus patent. The revolving bell or rotating disk feeding the paint to the atomizing zone by centrifugal force is fully embraced within the general concepts of the invention and constitutes a mere improvement in the mechanics of presenting the liquid to the zone of atomization.

"And what has been said in this connection on the subject of commercial success also disposes of plaintiff's contentions that because of the difference between the atomization heads shown in the drawings and those utilized in defendant's commercial system a fraud was practiced on the Patent Office in the representations made with respect to commercial success and that the alleged fraud is indicative of defendant's purpose 'to monopolize wrongfully the entire field of electrostatic coating on false affidavits.'"

Since the courts below have so clearly recognized the commercial systems as embodying the inventions of the patents in suit, there was no fraud in citing the commercial systems to the Patent Office as evidence of commercial success of these inventions.

There having been no fraud or misrepresentation in the obtaining of these patents, or "assertion of invalid patent claims" by Respondent in its marketing of its system, none of the decisions cited by Petitioner at page 40 has any application to the Record in this cause.

CONCLUSION.

It is submitted that when the relevant and controlling facts established by the Record, found by the District Court, and concurred in by the Court of Appeals, are taken into account, none of the questions stated in the Petition is presented for consideration or decision by the Record in this cause. The decision of the Court of Appeals is not in conflict with any decision in any other circuit or with any decision of this Court, and does not otherwise call for review upon certiorari. The Petition for a Writ of Certiorari should therefore be denied.

Respectfully submitted,

JAMES P. HUME,
38 South Dearborn Street,
Chicago 3, Illinois,

ELBERT R. GILLIOM,
1344 Consolidated Building,
Indianapolis 4, Indiana,

VERNE A. TRASK,
801 Hume-Mansur Building,
Indianapolis 4, Indiana,

HARRY T. ICE,
10th Floor, 111 Monument Circle,
Indianapolis 4, Indiana,

Attorneys for Respondent.

FILE COPY

Office Supreme Court, U.S.
FILED
MAR 30 1960
JAMES R. BROWNING, Clerk

IN THE

Supreme Court of the United States

OCTOBER TERM, 1959.

No. 501

BINKS MANUFACTURING COMPANY,
Petitioner,

vs.

RANSBURG ELECTRO-COATING CORPORATION,
Respondent.

ON WRIT OF CERTIORARI TO THE UNITED STATES COURT OF APPEALS FOR THE SEVENTH CIRCUIT.

BRIEF FOR THE PETITIONER.

W. DONALD MCSWEENEY,
JOHN B. ROBINSON, JR.,
WILLIAM A. MONTGOMERY,
231 South La Salle Street,
Chicago 4, Illinois,

CHARLES F. MERONI,
OTTO R. KRAUSE,
53 West Jackson Blvd.,
Chicago 4, Illinois,
Attorneys for Petitioner.

DALLSTREAM, SCHIFF, HARDIN,
WAITE & DORSCHEL,
AND
HILL, SHERMAN, MERONI,
GROSS & SIMPSON,
Of Counsel.

THE BUNTHORP-WARREN PRINTING COMPANY, CHICAGO

INDEX

	PAGE
Opinions below	1
Jurisdiction	1
Statutes involved	2
Questions presented	2
Statement	4
1. Proceedings below	4
2. Respondent's background, patent acquisition and leasing program	5
a. No. 1 Process and detearing	5
b. No. 2 Process	6
c. Acquisition of patent rights from possible competitors	7
d. Respondent's marketing program	9
3. Petitioner's background and SK-661 paint emitter	13
Summary of argument	15
Argument	19
I. Respondent has restrained trade and monopolized the market in electrostatic spray coating	19
A. Respondent dominates the field—there is no one else in it	19
B. Respondent's acquisition of patent rights	21
C. Respondent's license-leasing program	24
D. Injury to Petitioner	26

II. Respondent has illegally tied equipment leases to patent licenses 28
A. Tie-in of original equipment 28
B. Tie-in of replacement parts and services .. 33
C. Respondent's 1953 attempted purge was a sham contrived after it had already dominated the market with existing leases 36
D. Respondent's alternative form of patent license without lease, first devised in 1953, was also a sham 38
III. Respondent's package licensing of its patents forced its lessees to take licenses under unwanted patents 42
IV. Respondent's requirement that lessees grant back future patent rights is illegal 48
V. Respondent fraudulently procured the Starkey patents 54
Conclusion 58
Appendix 61

Table of Authorities.

CASES.

American Tobacco Company v. *United States*, 328 U. S. 781 (1946) 19

American Securit Co. v. *Shatterproof Glass Corp.*, 268 F. 2d 769 (C. A. 3, 1959), certiorari denied, 361 U. S. 902 (1959) 46, 47

Aro Mfg. Co. v. *Convertible Top Replace. Co.*, 81 S. Ct. 599 (1961) 6

Automatic Radio v. *Hazeltine*, 339 U. S. 827 (1950) ... 47

Barber Asphalt Corp. v. *La Fera Grecco Contracting Co.*, 116 F. 2d 211 (C. A. 3, 1940) 37

Carbice Corporation of America v. *American Patents Development Corporation*, 283 U. S. 27 (1931) 32, 35

B. B. Chemical Co. v. *Ellis*, 314 U. S. 495 (1942) 32

Hartford-Empire Co. v. *United States*, 323 U. S. 386, 324 U. S. 570 (1945) 22, 54

Hazel Atlas Glass Co. v. *Hartford-Empire Co.*, 322 U. S. 238 (1944) 58

International Salt Co. v. *United States*, 332 U. S. 392 (1947) 31, 42

Keystone Driller Co. v. *General Excavator Co.*, 290 U. S. 240 (1933) 58

Leitch Mfg. Co. v. *Barber Co.*, 302 U. S. 458 (1938) ... 32, 35

Mercoid Corporation v. *Mid-Continent Investment Co.*, 320 U. S. 661 (1944) 27, 32

Mercoid Corporation v. *Minneapolis-Honeywell Regulator Co.*, 320 U. S. 680 (1944) 32

Morton Salt Co. v. *Suppiger*, 314 U. S. 488 (1942) 32

Motion Pictures Patents Co. v. *Universal Film Manufacturing Co.*, 243 U. S. 502 (1917) 3

Northern Pacific Railway Company v. *United States*, 356 U. S. 1 (1958) 30, 31, 42

Oxford Varnish Corporation, et al. v. *Ault & Wiborg Corporation*, 83 F. 2d 764 (C. A. 6, 1936) 30

Precision Co. v. *Automotive Co.*, 324 U. S. 806 (1945) 54, 58

Stearns v. *Tinker & Rasor*, 252 F. 2d 589 (C. A. 9, 1957) 35

Times-Picayune Pub. Co. v. *United States*, 345 U. S. 594 (1953) 30, 32

Transparent-Wrap Machine Corp. v. *Stokes & Smith Co.*, 329 U. S. 637 (1947) 51, 52, 53

United States v. *Aluminum Co. of America*, 148 F. 2d 416 (C. A. 2, 1945) 21

United States v. *General Electric Co.*, 80 F. Supp. 989 (S. D. N. Y., 1949) 52

United States v. *General Electric Co.*, 82 F. Supp. 753 (D. N. J., 1949) 52

United States v. *Griffith*, 334 U. S. 100 (1948) 19

United States v. *Jerrold Electronics*, 187 F. Supp. 545 (E. D. Pa., 1960), affirmed per curiam, in the Supreme Court of the United States, No. 631, decided March 20, 1961, CCH Trade Reg. Rep., current volume, ¶69,960 ..... 30, 31, 35

United States v. *Paramount Pictures*, 334 U. S. 131 (1948) 47

STATUTES.

Act of October 15, 1914 (commonly known as the Clayton Act), 38 Stat. 731, *et seq.*:

Section 3 (15 U. S. C. 14) 2, 17, 35, 36, 61

Section 4 (15 U. S. C. 15) 2, 62

Section 16 (15 U. S. C. 26) 2, 62

Sherman Anti-Trust Act, 26 Stat. 209:
Section 1 (15 U. S. C. 1) 2, 3, 17, 36, 61
Section 2 (15 U. S. C. 2) 2, 3, 17, 36, 61
28 U. S. C. 1254 (1) 1, 2, 62
28 U. S. C. 1338 ..... 2, 63

IN THE

Supreme Court of the United States

OCTOBER TERM, 1960.

No. 501.

BINKS MANUFACTURING COMPANY,
Petitioner,

vs.

RANSBURG ELECTRO-COATING CORPORATION,
Respondent.

ON WRIT OF CERTIORARI TO THE UNITED STATES COURT OF APPEALS FOR THE SEVENTH CIRCUIT.

BRIEF FOR THE PETITIONER.

OPINIONS BELOW.

The District Court for the Southern District of Indiana rendered no opinion. Its findings of fact and conclusions of law are reported at 122 U. S. P. Q. 74. The opinion of the Court of Appeals is reported at 281 F. 2d 252.

JURISDICTION.

The judgment of the Court of Appeals was entered on July 27, 1960, and the petition for a writ of certiorari was filed on October 24, 1960. This Court granted the petition on December 19, 1960. The jurisdiction of this Court is invoked under 28 U. S. C. 1254(1).

STATUTES INVOLVED.

The statutes involved are Sections 1 and 2 of the Sherman Anti-Trust Act, 26 Stat. 209 (15 U. S. C. 1, 2); Sections 3, 4 and 16 of the Act of October 15, 1914 (commonly known as the Clayton Act), 38 Stat. 731 *et seq.* (15 U. S. C. 14, 15, 26); and 28 U. S. C. 1254 (1), 1338. The relevant portions of these statutes are set forth in the Appendix, *infra*, at pages 61-63.

QUESTIONS PRESENTED.

1. Whether, considering the totality of its activities of
   (a) acquiring outstanding patents or rights thereunder,
   (b) committing fraud on the Patent Office in order to procure the issuance of key patents,
   (c) tying equipment leases to patent licenses,
   (d) requiring its patent licensees to accept a package containing unwanted patents, and
   (e) requiring licensees to accept a broad grant-back clause as part of its standard agreements,

Respondent has monopolized and restrained trade in the electrostatic spray coating field in violation of Sections 1 and 2 of the Sherman Act.

2. Whether, in licensing patents and requiring as a condition of receiving such licenses that licensees lease its equipment and pay for replacements thereof including unpatented items, and pay for services, Respondent has violated Sections 1 and 2 of the Sherman Act and Section 3 of the Clayton Act and has misused its patents.

3. Whether, in forcing its license-lessees to take licenses under a package containing unwanted patents, Respondent has violated Sections 1 and 2 of the Sherman Act and has misused its patents.

4. Whether, in requiring its licensees to accept as part of its standard agreements a clause broadly requiring the granting back to it of rights under any inventions, improvements or patents in the airless electrostatic spray coating field, Respondent has violated Sections 1 and 2 of the Sherman Act and has misused its patents.

5. Whether Respondent fraudulently procured the issuance of its two Starkey patents.

STATEMENT.

1. PROCEEDINGS BELOW.

On October 11, 1956 Petitioner (Plaintiff below) instituted this action seeking a declaratory judgment that Respondent's Starkey Method Patent 2,685,536 (R. II:1021),[1] issued August 3, 1954 from an application filed September 29, 1944, was invalid and unenforceable. Respondent (Defendant below) counterclaimed charging Petitioner with infringement of said Starkey method patent. Because of Respondent's counterclaim, Petitioner's complaint was dismissed on its own motion. Petitioner then answered the counterclaim denying infringement, alleging invalidity and misuse of patents, and cross-counterclaimed charging violation of the antitrust laws. Respondent's Starkey Apparatus Patent 2,794,417 (R. II:1029), dated June 24, 1957 based on the same 1944 application, was brought in issue by supplemental pleadings. On order of the District Court substitute pleadings, including all amendments, were filed (R. I:1-45). Findings of fact and conclusions of law in favor of

1. The pages of the printed record in this Court are not numbered consecutively throughout all of the four volumes. Accordingly, record page references herein are preceded by the applicable volume number which is separated from the page number by a colon, *i.e.*, R. I:1 means volume I, page 1.

"Find." designates the findings of fact of the District Court below; "R.A." designates Petitioner's requests for admissions and Respondent's answers thereto; "Int." designates Petitioner's interrogatories and Respondent's answers thereto; "Pl. Ex." designates Plaintiff's Exhibit; and "Def. Ex." designates Defendant's Exhibit. References to exhibits are followed only by the record page number where the exhibit appears, since transcript portions in which exhibits were offered in evidence are for the most part not printed in this record. There is no dispute as to the admissibility of any exhibit referred to herein.

In the petition for certiorari, R. I and R. II were designated "P.A." and R. III was designated "D.A."

Respondent on all issues were entered by the Court on June 16, 1959 (R. II:968). The Court of Appeals affirmed, except for the allowance of attorneys' fees for the Respondent which is not in issue here (R. IV:838).

2. RESPONDENT'S BACKGROUND, PATENT ACQUISITION AND LEASING PROGRAM.

Initially, Respondent's predecessor was a small Indiana concern engaged in the business of selling kitchenware such as canisters, bread boxes, and the like (R. III:164). For more than the past 15 years, however, Respondent and its predecessor (hereinafter sometimes referred to as "Respondent") have been engaged in acquiring adversely owned patents or patent rights, and granting patent licenses coupled with leases of its equipment for electrostatic spray coating or painting systems. Respondent was incorporated on January 1, 1948 and has now grown to a size wherein it is the only supplier of airless electrostatic spray coating systems (Int. 12, 16, R. I:47), although it sold none, and now collects rental fees in excess of 3 million dollars a year (Int. 85, R. I:58).

a. No. 1 Process and Detearing.

The spray coating system first licensed and leased in 1944 by Respondent's predecessor, the Ransburg partnership, was known as the No. 1 Process and was covered by Pugh Patent 1,855,869 (which has now expired), acquired by Respondent in 1943 from Western Electric Co. (R. II:1073; III:167, 195-196, 204; Pl. Ex. SS, R. II:762). It consists basically in employing an electrostatic field for depositing liquid particles delivered or sprayed into the field by a conventional air spray gun (Pl. Ex. EEEE, R. II:854).

The Respondent also marketed in 1943 a process known

as "*electrostatic detearing.*" Detearing is a process in which articles having a wet coating are subjected to the action of an electrostatic field which serves to pull off or "detear" the excess and deposit same (R. I:315; Pl. Ex. EEEE, R. II:857). The technique of electrostatic detearing is described in Gravley Patent 2,359,476, acquired by Respondent in 1943 by assignment from The Brush Development Company (Pl. Ex. TT, R. II:765; R. II:1113).

b. No. 2 Process.

In Respondent's No. 2 electrostatic spray coating system (No. 2 Process), licensed and leased as early as 1951 (R. I:432-433), a rotating or centrifugal bell or disc is substituted for the air gun of the No. 1 Process (Pl. Ex. UUUU, R. II:877; Pl. Ex. VVVVV-1, R. III:428). This disc or bell rotating at 900 R. P. M. not only feeds the liquid to the one side of an electrostatic field, but also performs an indispensable part in the atomization, dispersion and deposition of the liquid (R. I:350-351). Respondent's No. 2 Process is inoperative without the use of centrifugal means in effecting atomizing and dispersion of the liquid (R. I:350-351). Respondent, before the issuance of its Starkey method patent, licensed and leased 171 of its No. 2 systems (Int. 40(a), R. I:51).

Both of the Starkey patents[2] were issued as the result of a single application, filed by William A. Starkey and Edwin M. Ransburg in 1944 and a later 1954 division thereof (Find. 50, R. II:992-993; R. II:1025, 1033; R. A. 25, 26, 28, R. I:198). The structures illustrated in the application and the issued patents showed stationary mechanical means

2. The Starkey apparatus patent is directed to a combination of "means" to perform a particular function. None of these means, "separately viewed, is within the grant." *Aro Mfg. Co.* v. *Convertible Top Replace. Co.*, 81 S. Ct. 599, 604, decided February 27, 1961.

for delivering coating material to the electrostatic field, and did not indicate the use of centrifugal force for this purpose. In the course of prosecuting the original application Respondent urged before the Patent Office Board of Appeals, in a brief filed in 1951, that the "heart" of the claimed invention "lies in the concept of employing a *single* electrostatic field which acts as the *sole* agent to atomize paint, disperse the particles formed by atomization, and deposit those particles on the work" (R. IV:635-636; emphasis in original). Respondent also furnished affidavits, which the Patent Office Board of Appeals relied on in upholding Respondent's claims, indicating commercial success of the No. 2 Process but not disclosing that the apparatus which had been commercialized employed the *rotating* bell or disc to effect atomization (Def. Ex. 5B, R. IV:637-642, 644).

c. Acquisition of Patent Rights from Possible Competitors.

Respondent, prior to its entering the electrostatic liquid spraying field in 1944 with its air type No. 1 Process (R. III:167), entered into negotiations with other possible competitors to the end of acquiring patent rights. Its first negotiations were with Behr-Manning Corporation from whom it received a letter dated November 22, 1940 indicating that that company was already in the electrostatic solid particle or abrasive spraying field, was interested in "the electrodeposition of paint or other liquids", and had patent coverage "directed to this art" (Pl. Ex. PPPP, R. II:862-863).

Respondent, initially, was not able to make a deal with that company, which terminated the negotiations in 1941 (Pl. Ex. PPPP, R. II:866). It then proceeded to acquire in 1943 Pugh Patent No. 1,855,869 from Western Electric Co. which it used in 1944 as a basis to renew the negotiation with Behr-Manning (R. II:1073; Pl. Ex. SS, R. II:762;

Pl. Ex. PPPP, R. II:866-867). In addition, Respondent offered its own Patent No. 2,270,341 (R. II:1105) in the solid particle field as being of particular interest in the abrasive field (R. II:1105; Pl. Ex. PPPP, R. II:868).

An agreement was consummated pursuant to which the electrostatic coating field was divided up between the parties (Pl. Ex. UU, R. II:771). Respondent granted to Behr-Manning an exclusive license, with the right to sub-license, in the field of electrostatic coating of abrasive articles and flock-coated articles under 5 patents and 9 patent applications (R. II:777). Respondent took an exclusive license, with the right to sub-license, in the field of electrostatic spraying of liquids, except for the field of abrasive and flock-coated articles, under some 31 patents and 7 patent applications of Behr-Manning (R. II:778-779). More than half of the listed pending patent applications of Behr-Manning were owned or controlled by Minnesota Mining and Mfg. Co. (R. II:779) as was likewise Smyser Patent RE 22,419 (assigned on its face to that Company, R. II:1037, 1041), with which Respondent was particularly concerned (R. I:434-435). Thus, not only patent rights owned by the respective parties to the agreement were divided up, but also patents being prosecuted or controlled by a third party were allocated.

On May 3, 1943 Respondent also acquired the electrostatic detearing patent of Gravley, No. 2,359,479, from The Brush Development Company of Cleveland, Ohio (R. II:1113; Pl. Ex. TT, R. II:765). Further, on October 7, 1948, Respondent acquired by agreement with Research Corporation, of New York, exclusive patent rights, including the right to sub-license, under additional patents for the electrostatic deposition of liquid materials, but the agreement expressly excluded solid particle coating, such as abrasive deposition (Pl. Ex. VV, R. II:779-789).

In answer to Request for Admission 58 (R. I:202), Respondent admits:

> that in no instance where it has acquired patent rights from other parties had any of such parties gone into competition with the defendant in the electrostatic liquid spraying field.

Likewise, in its answer to Request for Admission 56 (R. I:202) it admits that: "in granting licenses, licensees have not only been given the benefit of operating under the patents taken out by the defendant, but also under other patent rights acquired from third parties." Further, Respondent's Vice President Harold Ransburg testified that in granting licenses Respondent had included patents under which it had obtained rights from Behr-Manning, "[t]o the extent that they applied to our license * * *," and acknowledged "[w]e felt that the Smyser reissue patent did apply * * *" (R. I:447-448).

d. Respondent's Marketing Program.

Since its entry into the field of licensing electrostatic spray coating processes, Respondent has used a combined patent licensing and equipment leasing arrangement (R. I:114-151). It seeks to interest prospects for its No. 1 and No. 2 Processes by advertising in trade publications, distribution of sales brochures, and by direct solicitation. If a prospect expresses interest, Respondent obtains from him information on his product, his paint usage under existing procedures, and other pertinent factors, and invites him to submit samples of his products for a laboratory test. In Respondent's laboratory a painting operation is designed, set up and operated for the prospect. After demonstration of this pilot operation and after computation of possible paint savings, Respondent's engineers make a drawing of the demonstrated system and apparatus ar-

rangement, and a proposed license-lease agreement is submitted to the prospect, together with the drawing, on one of Respondent's standard printed forms. Respondent leases its equipment on the basis of licensees taking the entire coating unit. (Find. 60, 61, R. II:998-999; R. III:174-178; Pl. Ex. NNNN, R. I:571-574; Pl. Ex. EEEE, R. II:858-859; Pl. Ex. UUUU, R. II:879.)

Respondent does not sell equipment to users (R.A. 1, R. I:194). It collects its fees from a combination of the following charges (1) an initial fee of $5,000 to $40,000 which is payable to Respondent upon installation of the leased equipment and completely pays for the equipment including the profit thereon (R.A. 38, R. I:200; Int. 10, R. I:47; Pl. Ex. NNNN, R. I:579); (2) a minimum monthly fee or (3) a percentage of the cost of coating material which passes through Respondent's equipment per month, if this sum is greater than the minimum fee provided in (2) (Pl. Ex. III-3, R. II:812; Pl. Ex. JJJ-2, R. II:817). On the basis of these fees, Respondent collects millions of dollars a year from some of the largest industrial concerns in the United States (Int. 3(c), 85, 86, R. I:46, 58, 85-112).

During the early portion of this suit, the total number of Respondent's licenses was *733* (Int. 3(a), R. I:46, 177). *All* of the 337 licenses of its No. 2 Process contain a lease of Respondent's equipment (R.A. 17, R. I:196; R. I:152-177).

The contracts between Respondent and its licensees are prepared by Respondent and are normally in printed form (R.A. 44, 45, R. I:201). The terms of the Respondent's license have not varied substantially from the outset of leasing of the No. 1 Process to the present day leasing of both the No. 1 and the No. 2 Processes (Int. 170, R. I:74).

Respondent in its agreement forms (R. I:114, 122, 129, 137, 145) represents that it is the owner of or otherwise has the right to grant licenses under inventions and letters patent "pertaining to and covering methods and apparatus used in" the No. 1 or No. 2 Process, but does not specifically identify any patents or inventions. In most of its executed agreements Respondent has not specifically identified the applicable patents and pending patent applications. It has never submitted a license under any specific single patent (R. I:482).

In one instance, where a licensee, Avco Manufacturing Company, was able to get Respondent to list its patents in the agreement itself (Pl. Ex. XXXX, R. II:886-891), Respondent later admitted that none of the 36 patents listed "covered the No. 2 system leased and licensed to Avco Manufacturing Company" (R.A. 90, R. I:211). This Avco-Crosley license-lease agreement was still in force and effect at the time the suit was commenced, as shown by Exhibit E submitted by Respondent in its answer to Interrogatory 33 (R. I:50, 154).

According to Exhibit F prepared by Respondent in its response to Interrogatory 34 (R. I:50, 178-181), Respondent, in addition to the Avco agreements, also granted license-lease agreements to six other large companies wherein it similarly listed a large number of patents as noted, *i. e.*, E. I. du Pont De Nemours & Co., Durham Mfg. Corp., Gibson Refrigerator Co., Hoffman Mfg. Co., Scott Paper Co., and Stant Mfg. Co. With respect to at least three of these six, Respondent included patents that were clearly inapplicable (R. I:178-181; *infra*, page 45).

Respondent retains title (R.A. 71, R. I:205) in and reserves the right to make changes in the equipment it supplies, and in consideration of the required fees it agrees to supply replacement parts (*which include staple commodi-*

lies) (R.A. 54, R. I:202; R. I:182), as well as to supply services. Respondent reserves the right to cancel without cause after three years. The lessee may cancel at any time upon 30 days' notice, but he must return the leased equipment and there is no provision for return of any part of the initial fee (R. I:117, 125, 132, 140, 148).

At the start of licensing of the No. 2 Process in 1951, Respondent included in its agreements for this process "Future Inventions" clauses, in which the user was obligated to license back to Respondent, royalty-free, with the *right to sub-license*, any inventions, improvements, or letters patent, domestic or *foreign*, acquired from any source, relating to methods and/or apparatus involving electrostatic atomization of liquids or the deposition of electrostatically atomized liquids (R.A. 18, 19, R. I:196, 197). This requirement to license back thus embraced all inventions, improvements and patents in such methods or apparatus, whether or not they were dominated by any patents owned by Respondent. It extended not only during the period of the agreement, but for two years thereafter.

133 outstanding agreements containing such "Future Inventions" clauses are still in force and effect, although Respondent began in 1955 to use a new form of agreement without this clause (R. I:152-177; Find. 84, R. II:1012).

In 1953, after the No. 1 Process had been licensed for nine years and the No. 2 Process had been licensed for several years, the Respondent sent letters to its then existing licensees inquiring whether they would prefer licenses which would not involve rental of Respondent's equipment (Pl. Ex. S, Z-1; R. II:730, 731). To take advantage of this offer, the user would have had to return all of the leased equipment to Respondent, *without refund* of any of the large initial fee (covering more than the entire cost of the leased equipment) before proceeding to practice the licensed subject on the basis of a slight reduc-

tion in the monthly fee (Pl. Ex. LLLL, R. I:542). No licensee ever accepted the terms of this offer (Pl. Ex. LLLL, R. I:539).

At this time Respondent also printed new forms for a patent license alone without lease (*e.g.*, R. III:1, 15, 18, 31, 42). Such forms are very similar to the license-lease form, both in their generalized description of applicable patents and in their license grant. The forms contain the same termination provision as the license-lease forms, and until 1955 included a "Future Inventions" grant-back clause.

3. PETITIONER'S BACKGROUND AND SK 661 PAINT EMITTER.

Petitioner has been in the spray painting supply business since before the turn of the century, and sells directly to customers such catalogue items as spray guns, and allied equipment for the spray coating field (R. II:970). Prior to the issuance of Respondent's patents in suit, in collaboration with Midwest Research Institute (Pl. Ex. LLLLL, R. I:673), Petitioner developed a simple electrostatic liquid spraying device or emitter (Pl. Ex. MMMMM, R. I:711).

Petitioner's emitter SK 661 here in suit consists of two integral concentric spaced stationary disks at the outer edge of which liquid freely emerges from between the disks to be atomized by an electrostatic field (R. I:233; Pl. Ex. ZZZZ-8, R. II:905).

Petitioner successfully demonstrated its SK 661 emitter to sales personnel and others including representatives of Ford Motor Company, and submitted bids to Ford for installation of such emitter but was unable to consummate such bid in an order (Pl. Ex. LLLLL, R. I:674-81, 691; Pl. Ex. OOOOO, PPPPP, R. III:391-426).

In the course of correspondence (Pl. Ex. ZZZZ-1-13, R. II:894-911) between the parties, in which Petitioner inquired if Respondent had any license forms on the basis of a single royalty for each sale of an SK 661 emitter, Respondent in its last letter advised Petitioner it could not license on any other basis than that one on which the royalties were based upon the usage by the customer of coating material passing through the licensed spray equipment. Also, in the same letter Respondent notified Petitioner not to sell its equipment for airless electrostatic coating to any party who was not a licensee of Respondent (Pl. Ex. ZZZZ-13, R. II:911). Respondent's hundreds of licensees had already in every instance leased its equipment under agreements by which Respondent furnished replacement parts and repairs (R.A. 17, R. I:196; Int. 11, R. I:47; R.A. 52, 54, R. I:201-202) and Petitioner was thus foreclosed from entering this market.

SUMMARY OF ARGUMENT.

I.

Respondent, by the totality of its activities, has monopolized and restrained trade in the electrostatic spray coating field in violation of the antitrust laws. This conduct has consisted of acquiring outstanding patents or rights thereunder, committing fraud on the Patent Office in order to procure the issuance of the two important Starkey patents, tying in equipment leases to patent licenses, forcing its patent licensees to accept and thus recognize the validity of and pay for a package containing unwanted patents and requiring licensees to agree to an extremely broad grant-back provision in order to obtain a patent license.

Respondent entered the market of electrostatic spray coating in 1944, employing a license-leasing system which has remained substantially the same. Its first package deal was known as the No. 1 Process. In order to obtain its initial dominance in this market, Respondent embarked upon a program of acquiring patent rights. Among the important patent rights acquired was the Pugh patent. This patent was later used by Respondent to induce Behr-Manning Corporation to enter into a cross-licensing agreement. Under this agreement the parties partitioned the electrostatic coating field. Behr-Manning acquired exclusive rights in the field of electrostatic coating of abrasive articles and flock-coated articles, and Respondent obtained exclusive rights in the field of electrostatic spraying of liquids except for the fields of abrasive and flock-coated articles. Commencing in 1951 Respondent began marketing its airless electrostatic spray painting system known

as its No. 2 Process. The momentum which Respondent acquired from the dominant position which it had prior to 1951 in the electrostatic spraying field was an important factor in its attainment of the monopoly position in the airless electrostatic spray coating field. Its program of patent acquisition was culminated by the fraudulent procurement from the Patent Office of the two Starkey patents covering the No. 2 Process.

Respondent in its license-lease program always packaged patents. As a condition of granting a license, it required its licensees to take equipment under a lease. Therefore, in order for a prospective licensee to obtain any rights from Respondent, it had to take a bundle which consisted not only of a group of patents but also of leased equipment. Moreover, licensees had to pay Respondent for replacement parts for the equipment and for service and also agree to grant back rights under any patents or inventions which in any way related to the broad field of electrostatic atomization of liquids.

Respondent's monopolization of the airless electrostatic spray coating market prevented Petitioner from competing for the sale of equipment therein.

II.

In order for prospective licensees to obtain a patent license from Respondent, they were required to lease equipment from it. In this connection, it is undisputed that Respondent never granted a patent license for the No. 2 Process without joining thereto an equipment lease. Respondent, moreover, required its licensees to pay for unpatented replacement parts for this equipment, and services. Respondent's attempt in 1953 to purge itself of its illegality in tying in equipment leases with patent licenses was a sham; the illegality and its effect were never eliminated.

This tie-in program eliminated all of these equipment

users as potential purchasers of Petitioner's equipment. It constitutes a violation of Section 3 of the Clayton Act and Sections 1 and 2 of the Sherman Act, and a misuse of patents.

III.

Respondent package licensed its patents. It adopted a policy whereby it granted licenses only under a group of its patents. In almost all of its 733 license-lease agreements, Respondent did not specifically identify patents being licensed. There are seven licensees who have obtained agreements with respect to which specific patents have been listed. Each of these agreements listed a large number of patents, and, in at least four of them, even clearly inapplicable patents were included.

Respondent thus forced its licensees to recognize the validity of, and to pay for, unwanted patents. Thus, it violated Sections 1 and 2 of the Sherman Act and misused its patents.

IV.

Commencing in 1951 Respondent required licensees of its No. 2 Process, as a condition of obtaining a license, to grant back to it rights under any patents or inventions which in any way related to the broad field of electrostatic atomization of liquids. Although Respondent eliminated this grant-back requirement from its standard license agreements in 1955, there are still more than 130 license agreements in force and effect containing the broad grant-back provision. Because of Respondent's dominance of the airless electrostatic spray coating industry and the breadth, scope and effect of the grant-back provisions, their use by Respondent constitutes a violation of Sections 1 and 2 of the Sherman Act and a misuse of patents.

V.

Respondent fraudulently procured the issuance of its Starkey patents by misrepresentations to the Patent Office. A showing of commercial success was an essential factor in causing these patents to issue. The commercial success, however, had actually occurred in Respondent's No. 2 Process which contained additional indispensable features not in the disclosures of the Starkey patent application. In making its representations of commercial success to the Patent Office, Respondent withheld the fact that the commercial success of the No. 2 Process was dependent upon these additional features.

ARGUMENT.

I. RESPONDENT HAS RESTRAINED TRADE AND MONOPOLIZED THE MARKET IN ELECTROSTATIC SPRAY COATING.

Monopolization under the Sherman Act consists in the possession of monopoly power (the power to fix prices or exclude competitors) coupled with the purpose or intent to exercise that power. *United States* v. *Griffith*, 334 U. S. 100 (1948); *American Tobacco Company* v. *United States*, 328 U. S. 781 (1946). From the time of entering the electrostatic coating market in 1944, Respondent has tried by many means to obtain monopoly power and restrain trade in this market. As will be shown below, Respondent has been successful in its effort and has clearly shown its purpose and intent to exercise its dominant market power.

A. Respondent Dominates the Field—There Is No One Else In It.

Respondent's success in attaining its monopoly power is demonstrated by the undisputed fact that it is and always has been the sole manufacturer and supplier in the nation of airless electrostatic spray coating systems (Int. 12, 16, 17, R. I:47). Since 1951 sixty-six per cent of Respondent's licensees use its airless No. 2 Process (Int. 169, R. I:73). Undisputed facts are evidenced by the following noted admissions and answers wherein Respondent admits:

> that prior to the issuance of its process patent No. 2,685,563, as far as is known to defendant, it was the sole manufacturer and supplier in this country of airless electrostatic spraying sytems [R.A. 41, R. I:200].
>
> there was no airless electrostatic spray coating

system on the market outside of those being marketed by defendant, and [that] the only source, as far as defendant knew, for such systems was the defendant [R.A. 85(a), (b), (R. I:210].

as far as it knows there are no second-hand dealers in the United States handling electrostatic airless spray coating systems [R.A. 51, R. I:201].

as far as it knows there is no servicing organization in the United States outside of itself for servicing its so-called No. 2 airless electrostatic coating system [R.A. 52, R. I:201].

as a part of its patent licensing and leasing program, [it] render[s] engineering and technical services to its licensees and * * * [also that it is] compensated for same * * * from fees paid by licensees [Int. 11, R. I:47].

[It or anyone else has not] sold or offered for sale any second-hand or used equipment of Defendant for airless electrostatic spray coating [Int. 89(a), R. I:59].

in connection with its licensing and leasing program on airless electrostatic spraying systems it usually, as a part of the fees received by it, for the most part supplies the majority of replacement parts on the equipment furnished by the defendant to its licensees [R.A. 54, R. I:202].

Respondent has more than $2,250,000 invested in outstanding leased equipment (Int. 71, R. I:55). As of the date the complaint was filed herein it had granted *733* license-leases, of which *463* were still in force and effect (Int. 3, R. I:46, 177). Exhibit B, attached to and comprising part of the answer to Interrogatory 3, reveals a very formidable list of the largest companies in the country as Respondent's licensees (R. I:85-112). Also, as noted from Respondent's Exhibit M (R. I:193), even ammunition, projectiles, etc., supplied to the United States Government by numerous concerns fully come within the scope of the market dominated by Respondent. In 1957 the total cost

of all paint, varnish and lacquer used in Respondent's No. 2 Process equipment by its licensees was $6,693,642 (Find. 83, R. II:1011).

The extent of Respondent's dominance and the exercise of its power are further illustrated by the exorbitant fees it charges for licensing its patents and leasing equipment. For example, where Respondent designs for a customer a spraying unit involving the use of a reciprocator, the customer must pay an additional initial sum even though this item is not patented and Respondent does not supply it. This additional sum ranges from $500 to $1500, depending on the *size* of the machine which the customer must buy elsewhere (Int. 181, R. I:75, R. I:487-489; Pl. Ex. NNNN, R. I:580-585).

We submit that the dominant position which Respondent possesses as the sole manufacturer and supplier in the nation of airless electrostatic spraying systems, as well as the sole servicing organization and replacement parts dealer therefor, was not attained through the lawful exploitation of Respondent's patents nor thrust upon it and is not, therefore, a so-called legalized form of monopoly within the doctrine of *United States* v. *Aluminum Co. of America*, 148 F. 2d 416 (C. A. 2, 1945). Rather than such position being thrust upon it, each and every step Respondent has taken over the years was designed to enable it to monopolize this industry and illegally to restrain trade therein.

B. Respondent's Acquisition of Patent Rights.

In order to accomplish its purpose of monopolization and restraint of trade, Respondent found it necessary to purchase or to obtain rights under outstanding patents held by others. While Respondent has contended below that such program was necessary in order to protect it and its licen-

sees from charges of infringement of these patents, the record clearly discloses that such was not in fact its prime objective. Had it merely wished to accomplish this objective, Respondent could have done so through the acquisition of non-exclusive rights under such patents together with the right to grant sub-licenses of the same character. Instead, in each instance, it either acquired the patents outright or acquired exclusive rights thereunder.

Respondent's agreement with Behr-Manning, reached shortly after its acquisition of the all-important Pugh Patent, on its face reveals the goal which Respondent sought to achieve. As previously noted, that agreement divided up the field of electrostatic coating by allocating to Behr-Manning exclusive rights under Respondent's patents in the field of abrasive articles and flock-coated articles, and by reserving to Respondent exclusive rights under Behr-Manning patents in the rest of the field of electrostatic deposition of liquid particles. Respondent and Behr-Manning employed "their joint patent position to allocate fields of manufacture * * *" and thus to suppress competition, a course of action clearly condemned by *Hartford-Empire Co.* v. *United States*, 323 U. S. 386, 406-407 (1945). By Respondent's subsequent acquisition of the Gravley detearing patent and its exclusive license agreement with Research Corporation, Respondent further consolidated its patent position. It admits that

> in no instance where it has acquired patent rights from other parties has any of such parties gone into competition with the defendant in the electrostatic liquid spraying field [R.A. 58, R. I:202].

Respondent's correspondence with Behr-Manning vividly illustrates that its motive in acquiring these patents and patent rights was, by allocating the abrasive and flock-coated article field to Behr-Manning, to reserve for its own monopolistic domain the electrostatic liquid coating field.

In a letter relating to the agreement, Respondent noted (Pl. Ex. PPPP, R. II:869):

> *Our greatest concern* and that to which we have given the most thought and consideration was the question of just how to word our future license agreements *so that there could be no question in the minds of our users that they were restricted from operating in your fields*, and still not create undue sales resistance for ourselves. * * * [Emphasis supplied.]

In reply, Behr-Manning in its letter of November 24, 1944 said (Pl. ex. PPPP; R. II:876-876a):

> If this is the case and since no licenses have to your knowledge been granted in the flock or abrasive fields, we do not foresee difficulty or conflict with any of your existing licensees and it should not be difficult for you to *so limit your future licensees as to prohibit the employment of the patents* under which you have given us exclusive rights for abrasives and flock coated articles, in these fields. [Emphasis supplied.]

This problem was solved by including in the Ransburg license-lease agreements, at a point following the license grant, a clause to the effect that "said rights shall not include the use of said Process in the manufacture of abrasive articles, flock-coated articles, or articles coated with fiber-shaped particles" (R. I:449-453; see, *e.g.*, R. III:7).

The lengths to which Respondent resorted in striving to achieve and retain its monopoly are further underscored by the manner in which it procured the Starkey patents here in suit. Respondent, through certain of its key personnel, possessed ideas or inventions upon which it ultimately obtained its Starkey method and apparatus patents. Obtaining these patents was a necessary step in the over-all program to monopolize this market. In attempting to obtain this patent position, Respondent en-

countered tremendous opposition in the United States Patent Office. After ten years of arduous effort, Respondent was able to obtain the issuance of its Starkey method patent in 1954 (and the divisional apparatus patent in 1957) only through the means of presenting to the Patent Office false and misleading affidavits and thereby through such documents, overcoming the objections by the Patent Office to the issuance of the patent. This phase of Respondent's program to monopolize is discussed in detail under Part V of this brief.

C. Respondent's License-Leasing Program.

Having achieved and maintained its position of dominance in the industry through the acquisition of patents, Respondent indulged in further practices in order to reap to the full the benefits of its monopoly. It was not satisfied with merely seeking the payment of royalties from prospective licensees under its patents or patent applications but also wished to monopolize the business of furnishing the equipment with which the patented process or method might be used. It accomplished this objective through a a scheme whereby it tied into its patent licenses a requirement that the licensee lease equipment from Respondent, and, in addition pay for unpatented replacement parts. The No. 1 Process was marketed under this scheme beginning in 1944, and the momentum thereof enabled Respondent to entrench itself further in the market when its No. 2 Process came out. The full details concerning this tie-in phase of Respondent's program to monopolize and restrain trade are set forth in Part II of this brief.

Respondent did not notify its licensees of any alternative arrangement until the year 1953. In that year, apparently alarmed about the possibility that it was violating the antitrust laws and misusing its patents, Respondent notified

its existing license-lessees that they could return the leased equipment and convert their agreements into patent licenses. This "offer" was economically ridiculous and was recognized even by licensees to be mere window dressing purporting to legalize the license-leasing program.

From the inception of its program, Respondent has prepared forms of its agreement which it submitted to its prospective licensees. In 1953, it prepared and stocked standard forms of non-equipment licenses for the No. 2 Process. Respondent never entered into this new form of agreement with anyone. This form of agreement, moreover shows clearly the ulterior motive of Respondent to continue the same illegal monopolization that it was enjoying under its form of license-lease agreement. Upon analysis, it is clear that this form offers an alternative just as illegal as the license-lease form, and that any customer would be foolish to take the risk of entering into such an arrangement. The so-called alternative was a sham.

Respondent adopted a policy of only granting licenses which covered a group or package of its patents. In the great majority of its executed agreements, it did not specifically identify the patents being licensed. The language of these agreements, as well as extrinsic circumstances revealed by this record, shows that the patent package being licensed contained inapplicable and unwanted patents. Similarly, in a substantial portion of the handful of agreements in which the patents being licensed *were* specifically listed, clearly inapplicable patents were inserted. In this fashion Respondent overwhelmed the trade with its large array of patents and forced its licensees to recognize the validity of and pay for unnecessary patents.

Respondent was not satisfied with the dominant position it had obtained through its acquisition of patents and the illegal means used to exploit such patents. It felt that

it was necessary to look to the future. This it did through the grant-back provisions of all its No. 2 Process license agreements issued prior to the year 1955, 133 of which are still outstanding. The viciousness of Respondent's grant-back provisions lay in the fact that they were not restricted to mere improvements upon the licensed patents but covered any patentable inventions, regardless of how obtained by the licensee, which might in any manner affect the airless electrostatic spray coating industry. The grant-back provisions are illegal for the additional reason that they further tighten the monopolistic hold which Respondent has long had in that industry. The details concerning the grant-back phase of Respondent's program are covered in Part IV of this brief.

D. Injury to Petitioner.

Respondent's monopolization of the airless electrostatic spray coating market prevented Petitioner from selling equipment therein. Respondent's program of tying in equipment eliminated all of the equipment users as potential purchasers of Petitioner's equipment both for original use and for use as replacement parts. The package licensing and grant-back phases of its program were integral parts of the activities which impinged upon Petitioner to its damage.

Petitioner sells such catalogue items as spray guns and allied equipment for the spray coating field and has developed its SK 661 emitter, a simple electrostatic liquid spraying device. Petitioner was capable and ready to supply equipment for a complete electrostatic spray coating system on order (Pl. Ex. LLLLL, R. I:685-686). It had successfully interested Ford Motor Company as a large prospective customer in purchasing such a system employing its SK 661 emitter, but was unable to consum-

mate the sale because of Respondent's illegally acquired monopolistic position. Respondent threatened Petitioner not to sell its equipment for airless electrostatic spray coating to anyone who was not a licensee of Respondent. Of course, this left no market for Petitioner since all of Respondent's licensees already had leased their equipment from it and had even paid in advance for replacement parts.

When all the above-mentioned aspects of Respondent's history and operations in the electrostatic spray coating field are thus viewed as a whole, it becames evident that Respondent has purposely monopolized and restrained trade in this mark[illegible] Respondent was not privileged to engage in such activities because of its patent holdings. As this Court stated in *Mercoid Corporation* v. *Mid-Continent Investment Co.*, 320 U. S. 661, 666 (1944):

> The fact that the patentee has the power to refuse a license does not enable him to enlarge the monopoly of the patent by the expedient of attaching conditions to its use. * * * *The method by which the monopoly is sought to be extended is immmaterial.* * * * *When the patentee ties something else to his invention, he acts only by virtue of his right as the owner of property to make contracts concerning it and not otherwise. He then is subject to all the limitations upon that right which the general law imposes upon such contracts.* * * * [Emphasis supplied.]

The decision below should be reversed solely on the grounds set forth in this Part I. In the remaining portions of this brief we shall show that certain of Respondent's individual activities in themselves constitute violations of the anti-trust laws and patent misuse: Part II—tie-in; Part III—package licensing; Part IV—grant-back clauses; Part V—patent fraud.

II. RESPONDENT HAS ILLEGALLY TIED EQUIPMENT LEASES TO PATENT LICENSES.

A. Tie-in of Original Equipment.

From the commencement of its marketing of electrostatic spraying in 1944, Respondent has employed a license-leasing system which has remained substantially the same (Int. 170, R. I:74). Under this system Respondent has joined equipment leases with patent licenses. As Respondent's Vice President, Harold Ransburg, testified, the basic method of licensing has not changed since Respondent was organized (R. I:410). Also Mr. Howarth testified that since the filing of this suit in 1956, Respondent has pursued without change the same leasing program that it had before the suit was filed (R. I:610). The patent licensing and equipment leasing program for the No. 1 Process was so completely established by Respondent that the momentum thereof carried over into the licensing and leasing of its No. 2 Process beginning in 1951. Harold Ransburg testified that by that year Respondent was well established in the electrostatic spray coating field and was able to take advantage of the momentum afforded by its establishment in that field (R. I:433).

As a matter of practice Respondent prepares the standard license-lease agreement and submits it to the prospective licensee (R. A. 44, R. I:201). These license-lease forms are not tailored to meet the requirements of any particular customer (R. A. 45, R. I:201). Respondent does not sell any equipment (R. A. 1; R. I:194). It has in every instance coupled equipment leases with its patent licenses for the No. 2 Process. In this connection it specifically admits that:

> in granting its licenses in the airless electrostatic coating field (a) it has not only granted licenses un-

> der its letters patent in suit but has also joined with such licenses leases for equipment furnished by [it] and (b) has at all times maintained title to all equipment it has furnished its licensees under its agreements with them and (c) *in no case prior to the filing of this suit has it ever actually granted a license without the license being accompanied by a lease of equipment* [R. A. 71, R. I:205; emphasis supplied.]

Prior to 1953 Respondent did not offer to its licensees any alternative to the combined patent license and leasing arrangement described above.[3] Respondent on page 7 of its Brief in Opposition to the Petition for Certiorari states that the company's policy to make licenses without leases of equipment available "has been repeatedly expressed to Respondent's personnel in written bulletins from 1947" to the filing of this case. Although an internal policy had been recorded in these bulletins that "if a prospective customer should insist upon furnishing his own specialized equipment * * *" he would be permitted to do so, the same bulletins emphasized the disadvantages to Respondent and the supposed disadvantages to the customer which would attend such an arrangement (Def. Ex. 23, 24, R. III:282-284). Moreover pricing schedules did not envision this possibility (*e. g.*, Pl. Ex. QQ, R. II:756-761). The literature which was disseminated *to the trade* shows that Respondent was not offering its customers any alternative to the combined license-lease arrangement. Sales brochures stated flatly: "Ransburg supplies the complete automatic coating unit

3. As noted before, neither before nor after 1953 has Respondent licensed anyone under the No. 2 Process without conjunctively leasing equipment. Of the handful of customers licensed without leases under the No. 1 Process, one obtained its license through settlement of a patent infringement action brought by Respondent, and the others were already license-lessees of Respondent who were merely permitted to acquire *additional* apparatus from a third party. (Find. 67, R. II:1002-1003; R. I:421-422; Def. Ex. 30, R. III:349; R. III:192).

• • •" or "We supply the necessary specially designed electrostatic unit • • •" (Pl. Ex. IIII, R. II:862; Pl. Ex. EEEE, R. II:854). Respondent's policy of offering only a combined license-lease arrangement did not change after 1953, since no realistic alternative was offered by the attempted purge at that time. See *infra*, pages 36-42.

Respondent dominated the airless electrostatic field from 1951 to the present, as set forth in Part I of this brief at pages 19-21. Whether Respondent's domination resulted from patents or otherwise, the tying of equipment to patent licenses was illegal *per se* here.

> • • • "[T]ying agreements fare harshly under the laws forbidding restraints of trade." *Times-Picayune Publishing Co.* v. *United States*, 345 U. S. 594, 606. They are unreasonable in and of themselves whenever a party has sufficient economic power with respect to the tying product to appreciably restrain free competition in the market for the tied product and a "not insubstantial" amount of interstate commerce is affected. *International Salt Co.* v. *United States*, 332 U. S. 392.

Northern Pacific Railway Company v. *United States*, 356 U. S. 1, 6 (1958); see also *United States* v. *Jerrold Electronics*, 187 F. Supp. 545 (E. D. Pa., 1960), affirmed per curiam, in the Supreme Court of the United States No. 631, decided March 20, 1961, CCH Trade Reg. Rep., current volume, ¶ 69,960.

In cases where patents (or copyrights) are involved, the patent establishes the scope of the relevant market and supplies the requisite of dominance in such market. *Times-Picayune Pub. Co.* v. *United States*, 345 U. S. 594, 611 (1953). As the Sixth Circuit stated in *Oxford Varnish Corporation et al.* v. *Ault & Wiborg Corporation*, 83 F. 2d 764, 766 (1936), in holding that "monopoly of a defined portion of an industry is equally subject to the condemna-

tion of the anti-trust laws as is a monopoly over an entire industry":

> The ratio borne by the defendant's volume of business to the paint and varnish industry is not, we think, the measure by which monopolistic tendency of its contracts is to be determined. * * * The defendant is possessed of patents. Such patents grant it a limited monopoly, limited as to time and as to the articles or processes precisely covered by the claims. Within such limitations its monopoly is exclusive and complete—there is no unoccupied area. It seeks by contract to extend within that restricted field the monopoly of the patent to supplies not covered by patent. The record shows it to have been wholly successful. Competitors may not negotiate with its licensees on an equal trading basis—they are wholly and completely shut out.

In the instant case the license fees which Respondent collected in licensing its No. 2 Process amounted to $2,220,000 in 1956 and $2,640,000 in 1957 (Int. 85, 86, R. I:58). The total fees received by Respondent for its No. 2 Process from 1951 through 1957 amount to $8,865,000. Respondent admits that "the aggregate approximate cost of equipment and replacement parts when shipped was in excess of $2,250,000" and that "on the basis of cost, at least 75% of such equipment was designed for the airless type of electrostatic spray coating" (Int. 71, R. I:55). Moreover, in the year 1957 the total cost of all paint, varnish and lacquer used in the No. 2 Process by Respondent's licensees was $6,693,642 (Find. 83, R. II:1011). Certainly, taking any one of the above sums, it must be concluded that a "not insubstantial amount of interstate commerce is affected" within the meaning of the *International Salt*, *Northern Pacific* and *Jerrold Electronics* cases.

Aside from the question of *per se* illegality under the foregoing cases, however, violation of the Sherman Act

is present here regardless of the substantiality of commerce affected. As this Court pointed out in *Times-Picayune Pub. Co.* v. *United States, supra*, at page 614:

> * * * For purposes of § 1, "[a] restraint may be unreasonable either because a restraint otherwise reasonable is accompanied with a specific intent to accomplish a forbidden restraint or because it falls within the class of restraints that are illegal *per se*." * * * Since the requisite intent is inferred whenever unlawful effects are found, * * * and the rule of *International Salt* is out of the way, *the contracts may yet be banned by § 1 if unreasonable restraint was either their object or effect.* [Emphasis supplied.]

In the present case the record clearly establishes that unreasonable restraint was both the object and effect of Respondent's tie-in program throughout.

In addition to what has been said with respect to the illegality of Respondent's tie-in program under the provisions of the anti-trust laws, it is to be noted that such program constitutes a misuse of patents under the applicable cases. This Court has uniformly condemned all attempts by a patentee to obtain a monopoly over the use of unpatented equipment in connection with equipment covered by one or more of its patents. *Motion Pictures Patents Co.* v. *Universal Film Manufacturing Co.*, 243 U. S. 502 (1917); *Carbice Corporation of America* v. *American Patents Development Corporation*, 283 U. S. 27 (1931); *Leitch Mfg. Co.* v. *Barber Co.*, 302 U. S. 458 (1938); *Morton Salt Co. v. Suppiger*, 314 U. S. 488 (1942); *B. B. Chemical Co.* v. *Ellis*, 314 U. S. 495 (1942); *Mercoid Corporation* v. *Minneapolis-Honeywell Regulator Co.*, 320 U. S. 680 (1944). Of course, as the Court stated in *Mercoid Corporation* v. *Mid-Continent Investment Co.*, 320 U. S. 661, 666 (1944):

> *The method by which the monopoly is sought to be extended is immaterial.* * * * *When the patentee*

ties something else to his invention, he acts only by virtue of his right as the owner of property to make contracts concerning it and not otherwise. He then is subject to all the limitations upon that right which the general law imposes upon such contracts. * * * [Emphasis supplied.]

In view of the fact that the "method by which the monopoly is sought to be extended is immaterial", it is respectfully submitted that the doctrine of misuse of patents as applied by this Court in the tie-in cases is equally applicable to a package-licensing and license-back program such as has been conducted by Respondent. See Points III and IV, *infra*.

B. Tie-in of Replacement Parts and Services.

Respondent here tied in with its patent licenses not only all original equipment leased, but also all of the replacement parts for such equipment and services with respect to this equipment. In the fees charged, the licensees were required to pay Respondent in advance for replacement parts and services.

In its answer to Interrogatory 33 (R. I:50), Respondent submitted Exhibit E (R. I:152-177) showing what type of its 45 forms of agreement, and which type of electrostatic system was involved in each of its 733 licenses. In its answer to Interrogatory 36 (R. I:50), Respondent submitted the attached Exhibit G (R. I:182-183) as showing a typical list of equipment furnished under its license-lease agreements. This list includes many items which are unpatented staple articles or commodities of commerce. Certainly, such conventional items as *switches, alarm bell, cable, wire, transformer oil, tubing, hose fittings, terminal puller, snap ring pliers, tube pullers,* and *spare electrical tubes*, appearing on said list, are all within that cate-

gory. Yet, customers, as part of a package deal, were forced to pay for such parts in order to get the license.

As to this matter of parts, Mr. Wallin of Respondent's licensee Webcor, said (Pl. NNNN, R. I:645-646):

> Q. Have you ever had to acquire any replacement parts?
>
> A. No. All the parts in the equipment are covered by our charge.
>
> Q. Well, I mean, has Ransburg from time to time furnished additional parts?
>
> A. Oh, yes.
>
> Q. You haven't gone out on the outside and bought any parts?
>
> A. No, no.
>
> Q. You considered that was all included in the contract?
>
> A. That's right. *We even get hoses, connecting wires. The lead-in cable will break down, and that is furnished.*
>
> Q. Well, you could buy that on the outside, if you wanted it?
>
> A. We could, but why should we when we are paying for it.
>
> Q. *So to that extent it has cut down the amount of business you have had to transact with outsiders as far as these parts are concerned, is that right? I mean third parties, people besides yourself and Ransburg. You haven't had to go out and buy anything from other people?*
>
> A. For this particular equipment, you mean?
>
> Q. Yes, yes.
>
> A. The No. 2 equipment?
>
> Q. Yes.
>
> A. *No, we don't buy anything for the No. 2 for their part of the equipment.* There are other parts, the paint supply and stuff, which we still buy outside.
>
> Q. But nothing for the equipment that they furnished?
>
> A. No, we don't buy anything. [Emphasis supplied.]

Respondent's fees not only include all replacements, but also technical and engineering services which Respondent stands ready to supply its licensees (Int. 11, R. I:47). There is no other servicing organization or used equipment dealer in the field (R.A. 51-52, R. I:201).[4]

This Court in relying on its decision in the case of *Carbice Corporation* v. *American Patents Development Corp.*, 283 U. S. 27 (1931), said in *Leitch Mfg. Co.* v. *Barber Co.*, 302 U. S. 458, 463 (1938):

> * * * The Court held in the *Carbice* case that the limitation upon the scope or use of the patent which it applied was "inherent in the patent grant." It denied relief * * * on the broad ground that the owner of the patent monopoly, ignoring the limitation "inherent in the patent grant," *sought by its method of doing business to extend the monopoly to unpatented material used in practicing the invention.* By the rule there declared every use of a patent as a means of obtaining a limited monopoly of unpatented material is prohibited. *It applies whether the patent be for a machine, a product, or a process. It applies whatever the nature of the device by which the owner of the patent seeks to effect such unauthorized extension of the monopoly.* [Emphasis supplied.]

In *Stearns* v. *Tinker & Rasor*, 252 F. 2d 589 (1957), a case with a fact situation closely parallel to the case at bar, the Court of Appeals for the Ninth Circuit considered a leasing arrangement under which a patent owner leased some patented equipment together with an unpatented high voltage power supply and other unpatentable parts. In finding this arrangement a violation of Section 3 of the Clayton Act, the court held, at page 603:

> Here the lease requires the taking of both patented

4. See *United States* v. *Jerrold Electronics*, 187 F. Supp. 545 (E. D. Pa., 1960), affirmed per curiam, in the Supreme Court of the United States No. 631, decided March 20, 1961, CCH Trade Reg. Rep., current volume, ¶ 69,960.

and unpatented parts, which of necessity has the actual realistic effect of restricting competition in the unpatented parts.

Here, likewise, Respondent has violated Section 3 of the Clayton Act, as well as Sections 1 and 2 of the Sherman Act, by requiring all of its hundreds of licensees not only to lease original equipment from it but also to pay for replacements thereof as well as services. Respondent necessarily stifled competition as to such equipment, since the fees charged its licensees included the price of replacements and there was, accordingly, no possibility of the licensees acquiring such items elsewhere.

C. Respondent's 1953 Attempted Purge Was a Sham Contrived After It Had Already Dominated the Market With Existing Leases.

Respondent's only answer to the above tie-in argument is that it did not *require* a licensee to take Respondent's equipment as a condition of obtaining a patent license. Its 1953 actions, however, admit that its prior conduct was illegal. These actions did not eliminate the illegality.

Respondent, in 1953, apparently concerned with the anti-trust aspects of this unequivocal tie-in, paid lip service to the anti-trust laws by notifying its existing licensee-lessees that it would be willing to grant a patent license alone for the process, at a slightly reduced monthly fee, if the licensee would return all Respondent's leased equipment to it. There was to be no return to the licensee of the initial fee of thousands of dollars ($5,000 to $40,000: R. A. 38, R. I:200) which the licensee had paid to the Respondent at the time of installation (Pl. Ex. LLLL, R. I:542). Such fee had admittedly fully compensated Respondent for all of its costs on such equipment (Int. 10, R. I:47). Typical form letters offering this proposed modification will be found at R. II:730 and 731.

No licensee ever took advantage of the "offer" (Pl. Ex. LLLL, R. I:538-539; Pl. Ex. NNNN, R. I:574). At least one licensee, Webcor, branded the proposition "ridiculous" (Pl. Ex. LLL-4, R. I:826; R. I:465). Another licensee, Altex Corporation, recognized that this form letter had been adopted as mere window dressing when it wrote Respondent on July 28, 1953, as follows (Pl. Ex. LLLL, R. I:546):

> "The letter *proposes a change of contract no doubt to conform with precedent set up recently in the Patent Courts*, but since the expression in your letter is oversimplified, we would appreciate your sending us a rough draft of the proposal you are making to others." [Emphasis supplied.]

Harold Ransburg's testimony shows that Respondent was concerned because of the "IBM situation" (Pl. Ex. LLLL, R. I:547-548). Speaking of the "offer" contained in the letters, Respondent's own salesman, Pleva, said (Pl. Ex. NNNN, R. I:621-622):

> *That was kind of a sad situation and I couldn't see how anybody would be interested in that.* [Emphasis supplied]

and also stated that he could not give customers "any good answers" for the letters.

With such a reaction by Respondent's own salesmen, one can but conclude that Respondent's alternative offer of a license alone was not only "ridiculous," but, in truth, mere window dressing contrived on advice of counsel (Pl. Ex. LLLL, R. I:542) in an attempt to circumvent the anti-trust laws such as the attempt condemned in *Barber Asphalt Corp.* v. *La Fera Grecco Contracting Co.*, 116 F. 2d 211, 215 (C. A. 3, 1940).

Representatives of Respondent's customers, called as witnesses by Petitioner, testified that in their contacts with

Respondent's representatives, they never were made aware of any arrangement except where equipment was leased by Respondent (Pl. Ex. NNNN, R. I:634, 651). Respondent's Installation Department head, Howarth, stated (Pl. Ex. NNNN, R. I:574):

> Q. I would take it then from your answer that as far as the airless No. 2 system is concerned *you know of no instance where your company granted a license and the licensee was permitted to use its own or someone else's airless electrostatic equipment.*
>
> A. That is right. [Emphasis supplied.]

The conclusion is inescapable that Respondent had no intention, either before or after 1953, of granting any such licenses without equipment leases.

D. Respondent's Alternative Form of Patent License Without Lease, First Devised in 1953, Was Also a Sham.

The alternative form of license without lease which Respondent prepared and stocked in 1953 likewise shows, through its express provisions, that Respondent did not intend to offer a real choice to the trade. This form was drafted so as to give every assurance that Respondent would retain its stranglehold upon the market.

A typical example of such form of agreement for the No. 2 Process is Respondent's Exhibit D-30 adopted in April of 1954 (R. III:18-23). The recital therein is the same as that used in the license-lease form. It states that:

> Ransburg is the owner of, or otherwise has the right to grant licenses under, certain inventions, United States letters patent, or patent applications pertaining to and *covering methods and apparatus* used in electrostatically depositing liquid spray particles formed by airless atomization (without the use of compressed air), the process so used being hereinafter referred to as "said Process," • • •. [Emphasis supplied.]

Section 1 of the alternate agreement form similarly contains the same granting provision as the license-lease form. Ransburg therein

> grants to User, subject to and in accordance with all of the terms and conditions of this agreement and while the same is in effect, a nonexclusive, nonassignable *license to use said Process * * * with one unit as shown in Ransburg's Drawing No. , subject to such changes therein and such further specifications as Ransburg may prescribe*, * * *. [Emphasis supplied.]

Despite the fact that none of Respondent's equipment would be leased under the alternate form, the license is still restricted to the use of "said Process", *i.e.*, the use of the inventions covered by the patents being licensed, "*with one unit as shown in Ransburg's Drawing No. * * *.*" The drawing referred to is the drawing prepared by Respondent's engineers, which is always prepared ~~before a license is granted~~ (Find. 61, R. II:999), which is attached to and made a part of the agreement (Find. 62, R. II:999; R, III:178), and which embodies equipment of Respondent's own design and of the kind it alone has heretofore manufactured (*e. g.*, Pl. Ex. PPP-3, R. II:835).

Thus, a prospective licensee desiring, for example, a license under the Starkey method patent, without a lease, would be restricted to the use of the patented method with the equipment shown in Respondent's drawing. This equipment would be covered by the Starkey combination apparatus patent.[5] The District Court below recognized that these patents were independent of each other when it found (Find. 45, R. II:991):

5. See the Ransburg drawing for Chicago Rawhide Mfg. Co., Pl. Ex. PPP-3, R. II:835, and compare it with Def. Ex. 17-C, R. II:961, which is a diagram of apparatus covered by the Starkey apparatus patent.

> The two patents in suit are for inventions different from each other. While the contemplated operation of apparatus patent 2,794,417 inherently involves the method claimed in patent 2,685,536, that method can be practiced by forms of apparatus outside the scope of claim 4 of patent 2,794,417.

Respondent through its form of license without lease has thus made certain that no one who might take a license of the Starkey method patent could practice the patented method except by employing the apparatus patent. As is emphasized by the District Court's finding of fact noted above, it is not the statutory monopoly of the method patent which would compel the use of equipment covered by the apparatus patent, but the contractual provision devised by Respondent.

In its alternate form Respondent not only restricts the use of the method patent to a "unit as shown in Ransburg's Drawing No. ." It also restricts the use "to such changes * * * and such further specifications" in such unit "as Ransburg may prescribe." Thus, Respondent not only enables itself to compel the use of its apparatus covered by its existing patents, but also of such apparatus or improvements as it might in the future obtain patents upon.

Had any of these alternate forms been actually used, Respondent would still have been guilty of attempting to extend the limited monopolies of its individual patents beyond their statutory scope, even as it has been in the case of its license-leases. The evils inherent in the proffered license without lease arrangement may be readily enumerated:

1. If the licensee or its supplier (*i. e.*, Petitioner) could design around the apparatus patent and produce equipment for practicing the Starkey method, the licensee would

nevertheless be precluded, by its agreement with Resepondent, from using such equipment.

2. Respondent's Starkey method patent was issued on August 3, 1954, and, therefore, expires in 1971. On the other hand, the Starkey apparatus patent was issued on June 4, 1957 and therefore does not expire until 1974 (R. II:1025, 1033). Consequently, a prospect who desired to avail itself of the use solely of Respondent's Starkey method patent would find itself, of necessity, required to pay royalties for a period of almost three years following the expiration of that patent (or else to discontinue the use of its own equipment for that period.)

3. Respondent's potential competitors, including Petitioner, would have no incentive to invent apparatus for the use of the Starkey method that would not infringe the Starkey apparatus patent, for they would be deprived of a market for the sale of such apparatus.

Thus, it will be noted that, even if Respondent's prospective licensees have been offered a choice between two forms of license agreements, both are illegal. One, the license-lease, is illegal because it unlawfully ties in equipment. The other, license without lease, is illegal because it would unlawfully require the licensee to use apparatus which it might prefer not to use and which would be covered by a patent or patents unwanted by the licensee. Each arrangement serves illegally to extend the limited monopoly conferred by Respondent's patents and each stands equally condemned under the antitrust laws. Moreover, it is easily understandable why no one ever took the license without lease for the No. 2 Process. As shown above, the provisions of the alternate form were so drafted as to make certain that no customer would enter into such an onerous agreement had it ever been actually offered.

In view of the foregoing we submit that Respondent's

attempt to distinguish *International Salt Co. v. United States*, 332 U. S. 392 (1947) and *Northern Pacific Railway Company* v. *United States*, 356 U. S. 1 (1958) on the ground that in "each of those cases the arrangement was condemned because the licensee or lessee was denied any choice except to agree to the tied combination, unlike the instant case" (Brief in Opposition to the Petition for Certiorari, page 18) should fall upon deaf ears. If those cases are inapplicable where a choice exists, the choice must be a real one; not a mere choice between two equally illegal arrangements. Certainly this Court's footnote 4 on p. 6 of its opinion in *Northern Pacific Railway Company* v. *United States*, set forth on page 18 of Respondent's Brief in Opposition to the Petition for Certiorari, does not provide any support for Respondent's position.

A further evil inherent in the alternate form is the fact that any licensee desiring a license only under a method patent or patents would be *required* to take in conjunction therewith a license under an unwanted apparatus patent or patents. This compulsory package licensing clearly contravenes the anti-trust laws as demonstrated in Part III, to which we now turn.

III. RESPONDENT'S PACKAGE LICENSING OF ITS PATENTS FORCED ITS LESSEES TO TAKE LICENSES UNDER UNWANTED PATENTS.

Respondent owned 103 United States patents and had rights to sub-license under some 40 additional patents (R. I:243-246). It *never* licensed or offered to license under a single patent alone (R. I:482). Most of Respondent's licensing agreements do not specifically identify the applicable patents, inventions and pending patent applications under which it is licensing. In its agreements Respondent represents that it is the owner of or otherwise has the right to grant licenses under patents, inventions and ap-

plications "pertaining to and covering methods and apparatus used in electrostatically depositing liquid spray particles formed by airless atomization," and vaguely refers to "the process so used" as "said Process" (R. I:114, 122, 129, 137, 145; R. III:18). In the granting clause Respondent simply grants "the right to use said Process," thereby granting a license under *all* of said patents and inventions. Hence, Respondent in its licensing program contrived not to identify any of the patents being licensed or even those which it considers applicable to the leased equipment.

In addition to the language of Respondent's licenses the words and conduct of the contracting parties determine what patents were intended to be included in Respondent's blanket patent license agreements. Respondent admitted that it and its personnel not only did not know what patents in its large portfolio of patents were applicable to its leased equipment, but, further, kept no records thereof (R. I:471, 481-483). Harold Ransburg also wrote one licensee, Westinghouse, that: "*It is our policy not to agree that a licensee can contest the validity of our patents*" (R. I:472; emphasis supplied).

Respondent's position is that it merely licenses its leased equipment under "applicable patents," and that this is not objectionable as a package-license or block-booking of patents because no unwanted or inapplicable patents are included. If Respondent's position is well founded, all that an owner of a large group of patents would have to do in order to license them only as a package would be not to list by numbers or spell out the patents licensed but to specify merely that the license is under all patents which the licensor owns. Such a plan would force the licensee to recognize the validity of and pay for any and all patents of a large group which the licensor might at any time own.

Moreover, Respondent's claim that its agreements only

encompass "applicable" patents is refuted when reference is made to the handful of agreements under which it has specifically listed the patents being licensed. According to Exhibit F (R. I:178-181), prepared by Respondent in response to Interrogatory 34 (R. I:50), Respondent entered into license-lease agreements in which it listed a large number of patents with seven of its licensees, namely, Avco-Crosley, E. I. du Pont de Nemours & Co., Durham Mfg. Corp., Gibson Refrigerator Co., Huffman Mfg. Co., Scott Paper Co., and Stant Mfg. Co.

In one of these instances where a licensee, Avco Manufacturing Corp., was able to get Respondent to list its patents in the agreement itself (Pl. Ex. XXXX, R. II:886-891), Respondent admitted that none of the 36 patents listed "covered the No. 2 system leased and licensed to Avco Manufacturing Corp." (R.A. 90(b), R. I:211). This Avco-Crosley license-lease agreement was still in force and effect at the time the suit was commenced as shown by Exhibit E (R. I:154) submitted by Respondent in its answer to Interrogatory 33 (R. I:50).

Reference to this Exhibit E (R. I:154) showing the forms of licenses granted by Respondent to its respective licensees reveals that the Avco airless No. 2 system agreement was form of agreement D-29 (R. I:137). The first "Whereas" clause of this agreement was deliberately amended by letter of agreement dated January 18, 1954 to include the 36 patents listed in Exhibit B (Pl. Ex. XXXX, R. II:886, 891) as covering the licensed "Process" even though as now admitted by Respondent *it knew none was applicable or covered the licensed process* (R.A. 90(b), R. I:211).

The fact that this was done deliberately is evident from the following testimony of Harold Ransburg, Vice President in charge of sales (R. I:475-476):

Q. (Interposing.) *Were you aware of the fact*

at that time you did not have a single patent on airless atomization that was applicable to the installation that was involved in this agreement of Plaintiff's Exhibit XXXX? Were you aware of that fact?

A. What is the date of that letter?

Q. January 18, 1954.

A. *Yes, I am aware of that.* [Emphasis supplied.]

Just two months before the trial below Respondent attempted unsuccessfully by correspondence in October, 1958 to purge itself of its wrong-doing in its aforesaid agreement with Avco (Def. Ex. 41, R. II:965-967). In its reply of October 7, 1958 Avco's counsel Redfield said (R. II:966):

> Your letter of October 1 puzzles me. I have a note in my file indicating that I had insisted, probably at our conference on January 6, 1954, that the first "Whereas" clause specify the patents and applications covering the No. 2 process so as to tie down the term "said process" as used in the agreement to what is described and claimed in the patents. *Apparently what was done was to include a general list of all patents you owned in Exhibit A, which was not responsive to my request.* [Emphasis supplied.]

The agreement with Avco was by no means the only one where Respondent included clearly inapplicable patents. For example, in the agreements with du Pont relating solely to the air-type No. 1 Process, dated January 18, 1949 and November 4, 1949 (R. I:158) Respondent listed the Gravely *detearing* patent No. 2,359,47[illegible] (R. I:179). In the agreement with Durham Mfg. Corp. relating to the airless No. 2 Process (R. I:159) it listed Patent No. 2,247,963 (R. II:1095) which, as the District Court found, was Respondent's patent on the air-type No. 1 Process (R. II:968). Respondent also listed in the license to Huffman Mfg. Co.—which dealt strictly with the air-type process (R. I:163)—the Starkey method patent No. 2,685,536 which was directed to methods of electrost[illegible]ically spray painting without the use of air (Find. 22; R. II:984; R. I:180).

From the foregoing it is clear that Respondent meant to, and did, include in its licenses a large package of patents whether or not they were "applicable". The effect of this was to force the licensee to recognize the validity of and to pay for any patents of a large group that Respondent might at any time own, including unwanted patents.

The illegality and the evil of package licensing are well stated in *American Securit Co.* v. *Shatterproof Glass Corp.*, 268 F. 2d 769 (C.A. 3, 1959), certiorari denied, 361 U. S. 902 (1959), where the court said at page 777:

> * * * Mandatory package licensing is no more than the exercise of the power created by a particular patent monopoly to condition the licensing of that patent upon the acceptance of another patent but that is too much. The protection, or monopoly, which is given to the first patent stops where the monopoly of the second begins.
>
> Whatever may be the asserted reason or justification of the patent owner, if he compels a licensee to accept a package of patents or none at all, *he employs one patent as a lever to compel the acceptance of a license under another. Equity will not countenance such a result.* We conclude that the court below committed no error in finding that the defense of misuse asserted by Shatterproof is a valid one.
>
> * * * * *
>
> We conclude also, and quite apart from all of the foregoing, that Paragraph 8(a) of Securit's Standard Licensing Agreement which provides that that agreement shall continue "in full force and effect to the expiration of the last to expire of any" of Securit's patents set out in "Schedule A" *constitutes a patent misuse for it extends the payment of royalties of patents under patents which may expire to the expiration date of that patent most recently granted to Securit.* Indeed the expiration clause of the contract works an "aggravating hardship" on the licensee as Judge Leahy stated, in that it demands the renunciation of all patents, whether wanted or unwanted under the license. [Emphasis supplied.]

Apropos of the foregoing discussion in the *Securit* case, no license-lease of Respondent was restricted to the duration of *any* patent (Int. 81, R. I:57), and actually its agreements went on indefinitely (Pl. Ex. XXXX, R. I:625). Even when all of Respondent's patents expire, its licensees will still be obligated to pay full fees to keep and use the leased equipment.

The Court of Appeals below gave weight to the fact that Respondent's licenses are terminable by the customer on thirty days' notice. It ignored completely the point made in *Securit* that such an expiration clause works an "aggravating hardship" on the licensees since it demands the renunciation of the patent or patents which the licensee wanted or was willing to pay for in order to relieve himself of the obligation of recognizing the validity of and continuing monthly payments for those he did not want and was unwilling to pay for. Further, in the instant case since each licensee of Respondent was required to pay a substantial initial fee, in exercising the termination clause it would lose all of this initial investment in addition to losing the rights under the wanted patents.

The Court of Appeals below relied upon *Automatic Radio* v. *Hazeltine*, 339 U. S. 827 (1950). This is not an authority for the proposition that block booking or package licensing of patents is legal. There this Court at 831, noting with approval *United States* v. *Paramount Pictures*, 334 U. S. 131 (1948), stated that *it was not considering the matter of package patent licensing because the point had not been pressed below, nor was there any evidence before the Court.* The rule of law in the *Securit* case declaring package licensing illegal was not previously passed upon in the *Hazeltine* case.

This Court's opinion and the reasoning in support thereof in the case of *United States* v. *Paramount Pictures Inc.*,

334 U. S. 131 (1948) is controlling here on this issue. In that case this Court specifically approved the trial court's injunction prohibiting the defendants from performing or entering into any license in which the right to exhibit one feature film was conditioned upon the licensee's taking one or more other features. Both this Court and the trial court found that such practice constituted an unlawful expansion of the limited monopoly conferred by the copyright laws and predicated their opinion upon the reasoning set forth in the tying cases. The application of that principle to the package licensing program of Respondent in this case calls for a condemnation of its patent licensing program under the antitrust laws.

IV. RESPONDENT'S REQUIREMENT THAT LESSEES GRANT BACK FUTURE PATENT RIGHTS IS ILLEGAL.

Beginning in 1951, and for over 3½ years before the allegedly basic Starkey method patent in suit was issued on August 3, 1954, Respondent included in its license-leases extremely broad grant-back clauses.

Respondent, in its Brief in Opposition to the Petition for Certiorari (page 26), asserts that in January of 1955 the license-back clause was eliminated, and "was not used thereafter." This ignores the fact that, according to Exhibit E (R. I:152-177), 133 executed agreements with such clauses were outstanding on October 11, 1956 when this suit was commenced (R. I:152-177). Hence, such clause is still being used by the dominant concern in the industry to stifle improvements by these licensees who are parties to such agreements.

As to the agreements containing license-back provisions, Respondent in its answer to Interrogatory 61 (R. I:53) listed its forms D-23 through D-29 and D-31. License back provisions, in paragraph 11, entitled "Future

Inventions," are found in all representative license forms D-23, D-25, D-26 and D-29 of Respondent reproduced in R. I:114-144.

A typical license back "Future Inventions" clause, with right to sub-license, is quoted in the Request for Admission 19 (R. I:196-197) and reads:

> User agrees that in the event User *acquires from any source, any inventions, improvements, or letters patent, domestic or foreign, comprehending subject matter usable in any way in connection with methods or apparatus for the electrostatic atomization of liquids or for coating with electrostatically atomized liquids*, Ransburg shall have with respect to coating methods and apparatus employing said inventions, improvements, and the subject matter of said letters patent, a royalty-free non-exclusive, assignable license, with right to sub-license, such license to be irrevocable except upon voluntary surrender by Ransburg. Patents subject to Ransburg's rights under this paragraph shall include only patents acquired by User during the term of this agreement, patents acquired by User *within two years following termination of this agreement*, and patents whenever acquired by User which cover inventions and improvements made within the term of this agreement or *within two years following its termination*. [Emphasis supplied.]

Now because Respondent in the middle of 1955 adopted a printed form which did not use the "Future Inventions" clause, the courts below gave no weight to the fact that it had not discontinued its license-back provisions in any of its numerous outstanding agreements. These include agreements with such large concerns as E. I. du Pont de Nemours (R. I:158); General Electric Co. (R. I:161); Hotpoint, Inc. (R. I:163); Webcor, Inc. (R. I:175); and Whirlpool-Seegar Corporation (R. I:176). Also see R.A. 48 (R. I:201).

Respondent, beginning in 1951 with its form D-23 (R. 1:114) had for a period of over eight years, forced a major part of the airless electrostatic spray coating industry, dominated by Respondent, to agree to license back to it, all inventions and improvements relating in any way to electrostatic atomization of liquids. As a consequence, all such improvements and inventions were completely stifled. As to this matter, Harold Ransburg testified (R. 1:487):

> Q. As a matter of fact in all of these hundreds of licenses that you granted under the No. 2 system, has a single licensee actually ever made any improvement that they turned over to you?
>
> A. As a matter of fact, a normal licensee has never to my knowledge.
>
> Q. There was not any incentive for them to do it, was there?
>
> A. Only to improve their own operation.
>
> Q. *But they would have to give you free rights so you could license their competition, wouldn't they?*
>
> A. *That is correct.* [Emphasis supplied.]

Respondent employed the "Future Inventions" clauses not to pass along the benefits of any inventions made by others, but to further its monopolization of the industry. It forced the acceptance of such "Future Inventions" clauses upon the trade. As testified to by Mr. Hubbard, attorney for Hotpoint, Respondent would not grant a license without having some grant-back provision in it.

Mr. Hubbard testified (Pl. Ex. NNNN, R. 1:649-650):

> Q. Did you endeavor to obtain an agreement without any such provision as to future inventions?
>
> A. Yes, we did.
>
> Q. With what results?
>
> A. Negative results. Now, I might say that such negotiation was carried on orally at this meeting in Indianapolis that I spoke of.
>
> * * * * * *
>
> Q. Well, can you tell us what transpired in that

discussion—that is, what you said and what Mr. Ransburg said? That is, as you recall it?

A. I suspect I tried to preach to them a little bit about what I considered a rather killing-the-goose-that-laid-the-golden-egg kind of a provision.

Generally speaking, the General Electric Company has a rather liberal licensing policy. We do not require and, as a matter of fact we steer away from, the so-called grant back provisions and I have probably been indoctrinated in that philosophy. So our discussion was a very friendly one and a rather long one.

Mr. Downer, as I recall, *talked about the Trans-Wrap situation as being one which justified their position* and we had considerable argument about that. The net result was, however, that *I did not persuade them to eliminate this patent provision* and we did negotiate that one which I thought was a satisfactory substitute for theirs. [Emphasis supplied.]

In another instance, the General Electric Company had objected to the inclusion of such a "Future Inventions" clause. In order to modify this clause, Respondent insisted upon increasing the initial fee from $5300 to $9300 (Pl. Ex. KKK, R. II:819).

The attitude of the trade with regard to improvements is clearly reflected in dealings with the General Electric Company. In a letter dated December 16, 1953, a representative of Respondent wrote to Mr. Harold Ransburg (Pl. Ex. II-4, R. II:743), because a representative of General Electric had expressed a need for some sort of triggering system on the individual bells of the triple head unit commercialized by the Respondent. In that letter Respondent's representative said: "*He realized that the means of marketing which we had was detrimental to getting any further work done on the equipment* * * *" (emphasis supplied).

The courts have long recognized that grant-back provisions may involve anti-trust violations. In *Transparent-*

Wrap Machine Corp. v. *Stokes & Smith Co.*, 329 U. S. 637, 646-647 (1947), this Court in this regard said:

> As patents are added to patents a whole industry may be regimented. The owner of a basic patent might thus perpetuate his control over an industry long after the basic patent expired. Competitors might be eliminated and an industrial monopoly perfected and maintained. Through the use of patent pools or multiple licensing agreements the fruits of invention of an entire industry might be systematically funneled into the hands of the original patentee.

In a case subsequent to the *Transparent-Wrap* case, *United States* v. *General Electric Co.*, 80 F. Supp. 989, 1006 (S. D. N. Y., 1948), the court found *that against the background of market domination, the transfer of future patent rights as a condition for receiving a license was per se a violation of the anti-trust laws.* The court said:

> The employment of basic patents, or patents which may be basic, to compel the transfer of future patent rights, is condemned per se, when practiced on a scale such as is found in this suit.

Whether the license-back provision is exclusive or non-exclusive should not be determinative of its legality. A non-exclusive grant-back provision for future inventions in a market dominated by the licensor was held to be an anti-trust violation in *United States* v. *General Electric Co.*, 82 F. Supp. 753, 816 (D. N. J., 1949); it should so be held here.

Respondent relied upon this Court's decision in *Transparent-Wrap Machine Corp.* v. *Stokes & Smith Co.*, 329 U. S. 637, 648 (1947), that "the inclusion in the license of the condition requiring the licensee to assign improvement patents is not *per se* illegal and unenforceable." However, in that case there was no showing of dominance or monopo-

lization of the market or restraint of trade, as are here involved. Moreover, the Court there said, at pages 647-648:

> Congress, however, has made no specific prohibition against conditioning a patent license on the assignment by the licensee of improvement patents. But that does not mean that the practice we have here has immunity under the anti-trust laws. Indeed, the recent case of *Hartford Empire Co. v. United States*, 323 U. S. 386, 324 U. S. 570, dramatically illustrates how the use of a condition or covenant in a patent license that the licensee will assign improvement patents may give rise to violations of the anti-trust laws.

The *Transparent-Wrap* decision affords no justification for the decision below with respect to the grant-back provisions of the patent licenses for the following reasons:

1. In *Transparent-Wrap* the grant-back was limited to improvement patents, namely those where "the Licensee shall discover or invent an improvement which is applicable to the Trans-Wrap Packaging Machine." In the instant case the grant-back is considerably broader as set forth above. It requires the granting back of inventions and patents, domestic or foreign, from any source, comprehending subject matter usable in any way with airless electrostatic spray coating. This requirement extends for two years beyond the termination of the agreement.

2. In *Transparent-Wrap* this Court was considering the effect of one grant-back provision between only the licensor and licensee there involved. Here there are more than 130 of these broad grant-back provisions in existence.

3. In *Transparent-Wrap* the licensor was not considered by this Court to have had any market dominance over and above that legally bestowed upon it by the patent grant, whereas in the instant case Respondent's market dominance, as shown in all of the foregoing parts of this brief, is not so limited.

The license-back provisions of its airless system agreements, still in force and effect, were and are still a very important part of Respondent's control of the industry, and as such are clear violations of the anti-trust laws under the authority of *Hartford Empire Co.* v. *United States*, 323 U. S. 386, 324 U. S. 570 (1945).

V. RESPONDENT FRAUDULENTLY PROCURED THE STARKEY PATENTS.

When Respondent commenced marketing its No. 2 Process in 1951 it had no patent protection upon its airless system. To remedy this situation and to further its monopolization of the electrostatic spray coating field, Respondent contrived the wrongful procurement of the Starkey patents. Respondent procured the issuance of these patents by false representations in affidavits filed in the Patent Office to the effect that it had *actually commercialized* the stationary type systems of the then pending parent method patent application (R. IV:637-643). The issue here raised is based on documented evidence as to which there is no dispute, such as Respondent's answers to Interrogatories and Requests for Admissions (R. I:46-218) and patent file history admissions (R. IV:634-648).[6]

Patents procured by fraud are unenforceable. *Precision Co.* v. *Automotive Co.*, 324 U. S. 806, 819 (1945).

The two Starkey patents, 2,685,536 (R. II:1021) and 2,794,417 (R. II:1029), are based on the same *parent application filed September 29, 1944*, from which method patent 2,685,536 issued on August 3, 1954 and apparatus patent 2,794,417 (arbitrarily divided out by Respondent without any Patent Office divisional reqirement) was issued on

6. Respondent's physical exhibits comprising voluminous file histories of the two Starkey patents in suit are on file in this Court as Def. Exs. 5A, 5B and 6, excerpts from which were printed in R. IV.

June 4, 1957 (R.A. 25, 26, 28, 29, 31-33, R. I:198-9; R.A. 64, R. I:203; R.A. 79, R. I:206; Int. 93, 124, R. I:59, 63). Both patents have identical drawings and substantially identical specifications.

During the prosecution of the Starkey application, the applicants after final rejection by the Examiner and on appeal to the Patent Office Board of Appeals repeatedly urged that their invention resided in using a single field as the "sole agent" for effecting atomization (Def. Ex. 5A, R. IV:635-636):

> The heart of applicants' invention lies in the concept of employing a single electrostatic field which acts as the sole agent to atomize paint, disperse the particles formed by atomization, and deposit those particles on the work [Emphasis in original].

Respondent's expert, Miller, testified that what he and Starkey considered to be new was "The concept of using electrostatic forces *alone* to atomize, disperse, and deposit the materials" (R. I:563), and, as will be later developed, the use of the field *alone* and as the sole medium for effecting atomization and coating was in fact the heart of what Starkey invented.

The fact that Respondent knew it had never commercialized any of the structures illustrated in the Starkey patents cannot be in dispute, in view of Respondent's unequivocal admissions herein (R.A. 2, 30, 37, R. I:194, 199, 200; Int. 149, R. I:70). Also, Harold Ransburg testified that an applicator of the type described in the patents presented a "very difficult cleaning problem", and was never commercialized (R. I:432).

For some eight years after the application was filed, only one narrow claim had been indicated as being allowable by the Patent Office. It was then that the Respondent submitted an affidavit in the name of Gilbert Isgrigg attempting to show certain commercial advantages for the

subject matter of the application. The affidavit alleged that Mr. Isgrigg's employer, Hamilton Manufacturing Corporation of Columbus, Indiana, had previously employed the old air-type Ransburg No. 1 Process and that on or about November, 1952 the No. 1 equipment was replaced by new equipment from Respondent (R. IV:637). The affidavit's description of the new apparatus was very vague and did not describe the specific character of the atomizing head being used ("* * * the work is conveyed past and in spaced relation to a number of atomizers maintained at an electrical potential of about 70,000 volts * * *", R. IV:638).

Also, in this respect, the Howarth affidavit filed March 20, 1953 identified licensed structures of the No. 2 Process as being a commercial success of the Starkey invention (R. IV:640). In the Patent Office appeal brief filed May 25, 1953, it was represented as follows (R. IV:643):

> The affidavit of Donald C. Howarth testifies to the wide acceptance and commercial success of applicants' invention on industrial production lines. At the date of the affidavit, *78 licensees* including such companies as. General Electric, Dupont, and Studebaker, had paid substantial initial sums and were making continuing monthly payments for the right to use 101 production units *embodying the invention* [Emphasis supplied].

Now, the fact of the matter was, as Respondent well knew at the time of its representations to the Patent Office, that the installation at the Hamilton Company Plant (Pl. Ex. UUUU, R. II:878) was a No. 2 Process (R. I:426) and that all of its No. 2 Process installations use a *rotating head or centrifugal atomizing head*, as distinguished from the Starkey patent stationary head system wherein the electrostatic field alone does all the atomizing (Def. Ex. 17-A, 17-B, 17-C, R. II:959-961).

Further, it was admitted during trial that if the rota-

tion of the centrifugal head or applicator (which rotated at about 900 R. P. M.) used in the No. 2 Process was arrested, *the electrostatic field alone would not effect coating* or painting as the paint would then drip on the floor (R. I:270-271, 350).

Following the foregoing false showing by Respondent, through affidavits, the Patent Office Board of Appeals after repeated rejections and appeals, finally allowed the method claims in the application. In so doing that Board said (Def. Ex. 5B, R. IV:644):

> *We have examined these affidavits with care and we find that they establish beyond question that the spray painting process to which the claims are directed has achieved commercial success* [Emphasis supplied].

Hence, it was the showing of commercial success which was an essential factor causing the first Starkey patent to issue. The commercial success, however, had been with Respondent's No. 2 Process which contained additional essential features not in the disclosures of the Starkey patent.

After Respondent was successful in fully overcoming the resistance of the Patent Office, it was not satisfied with one patent, but without any divisional requirement by the Patent Office (R.A. 25, 26, 28, R. I:198), it arbitrarily divided out in 1954 the apparatus claims so as to prolong its patent monopoly with a second patent, *i. e.*, 2,794,417, based on the same false representations made to the Patent Office.

Respondent ultimately procured by its false representation two patents, both of which went beyond the scope of the Starkey invention on which they were supposed to have issued. Claim 2 of the Starkey method patent 2,685,536, chosen as representative of the concept embraced by this patent, calls for a single method step, namely, "*the step of maintaining between the head and the article an electro-*

static field which electrostatically effects said atomization, dispersion and deposition" (R. II: 1027; emphasis supplied). This basic concept is common to and depended on in all of the Starkey method claims to impart patentable novelty to them. None of the claims calls for the field alone to effect atomization. Claim 4 of the Starkey apparatus patent 2,794,417 (R. II:1034), the only portion of that patent here in suit, is likewise directed to this same single concept, but defines it in terms of the spacing of the points of atomization, which is also referred to in Starkey method patent claim 1 (R. II:1026-1027). Thus, Respondent procured two broad patents on the use of an electrostatic field, not limited to the field alone, for spray coating liquid. Moreover, of course, neither patent contains any reference to the use of centrifugal force as a contributing agent in effecting atomization.

In view of the foregoing, the courts below erred since patent monopolies, to be enforceable, must "spring from backgrounds free from fraud or other inequitable conduct." *Precision Co.* v. *Automotive Co.*, 324 U. S. 806, 816 (1945). Also see *Keystone Driller Co.* v. *General Excavator Co.*, 290 U. S. 240 (1933), *Hazel Atlas Glass Co.* v. *Hartford-Empire Co.*, 322 U. S. 238, 250 (1944).

CONCLUSION.

The judgment below in favor of Respondent on its counterclaims should be reversed, and judgment should be entered allowing the cross-counterclaim of the Petitioner, and the cause should be remanded to the District Court with instructions as follows:

1. To dismiss Respondent's counterclaims for want of equity;

2. To enjoin Respondent from enforcing its patents and patent rights which relate to electrostatic spray coating;

3. To enjoin Respondent from enforcing or carrying out its existing license-lease agreements and from entering into any further agreements involving its patents in the electrostatic spray coating field until it dissipates fully the effects of its illegal domination;

4. To declare Respondent's Starkey patents in suit invalid;

5. To determine the amount of damages incurred by Petitioner and the amount of costs and expenses including reasonable attorneys' fees to be allowed on its cross-counterclaim; and

6. To enter judgment in favor of Petitioner for treble the amount of damages to be determined, together with all costs and expenses including reasonable attorneys' fees.

Respectfully submitted,

W. Donald McSweeney,
John B. Robinson, Jr.,
William A. Montgomery,
231 South La Salle Street,
Chicago 4, Illinois,
Charles F. Meroni,
Otto R. Krause,
53 West Jackson Blvd.,
Chicago 4, Illinois,
Attorneys for Petitioner.

Dallstream, Schiff, Hardin,
Waite & Dorschel,
and
Hill, Sherman, Meroni,
Gross & Simpson,
Of Counsel.

APPENDIX.

Section 1 of the Sherman Anti-Trust Act, 26 Stat. 209 (15 U. S. C. 1), provides in pertinent part as follows:

> Every contract, combination in the form of trust or otherwise, or conspiracy, in restraint of trade or commerce among the several States, or with foreign nations, is hereby declared to be illegal. * * *

Section 2 of the Sherman Anti-Trust Act, 26 Stat. 209, as amended by the Act of July 7, 1955, 69 Stat. 282 (15 U. S. C. 2), provides as follows:

> Every person who shall monopolize, or attempt to monopolize, or combine or conspire with any other person or persons, to monopolize any part of the trade or commerce among the several States, or with foreign nations, shall be deemed guilty of a misdemeanor, and, on conviction thereof, shall be punished by fine not exceeding fifty thousand dollars, or by imprisonment not exceeding one year, or by both said punishments, in the discretion of the court.

Section 3 of the Act of October 15, 1914 (commonly known as the Clayton Act), 38 Stat. 731 (15 U. S. C. 14), provides as follows:

> That it shall be unlawful for any person engaged in commerce, in the course of such commerce, to lease or make a sale or contract for sale of goods, wares, merchandise, machinery, supplies or other commodities, whether patented or unpatented, for use, consumption, or resale within the United States or any Territory thereof or the District of Columbia or any insular possession or other place under the jurisdiction of the United States, or fix a price charged therefor, or discount from, or rebate upon, such price, on the condition, agreement or understanding that the

lessee or purchaser thereof shall not use or deal in the goods, wares, merchandise, machinery, supplies or other commodities of a competitor or competitors of the lessor or seller, where the effect of such lease, sale, or contract for sale or such condition, agreement or understanding may be to substantially lessen competition or tend to create a monopoly in any line of commerce.

Section 4 of the Clayton Act, 38 Stat. 731 (15 U. S. C. 15), provides as follows:

> That any person who shall be injured in his business or property by reason of anything forbidden in the antitrust laws may sue therefor in any district court of the United States in the district in which the defendant resides or is found or has an agent, without respect to the amount in controversy, and shall recover threefold the damages by him sustained, and the cost of suit, including a reasonable attorney's fee.

Section 16 of the Clayton Act, 38 Stat. 737 (15 U. S. C. 26), provides in pertinent part as follows:

> That any person, firm, corporation, or association shall be entitled to sue for and have injunctive relief, in any court of the United States having jurisdiction over the parties, against threatened loss or damage by a violation of the antitrust laws, including sections two, three, seven, and eight of this Act, when and under the same conditions and principles as injunctive relief against threatened conduct that will cause loss or damage is granted by courts of equity, under the rules governing such proceedings, and upon the execution of proper bond against damages for an injunction improvidently granted and a showing that the danger of irreparable loss or damage is immediate, a preliminary injunction may issue . . .

28 U. S. C. 1254 provides in pertinent part as follows:

> Cases in the courts of appeals may be reviewed by the Supreme Court by the following methods:

(1) By writ of certiorari granted upon the petition of any party to any civil or criminal case, before or after rendition of judgment or decree * * *.

28 U. S. C. 1338 provides as follows:

(a) The district courts shall have original jurisdiction of any civil action arising under any Act of Congress relating to patents, copyrights and trademarks. Such jurisdiction shall be exclusive of the courts of the states in patent and copyright cases.

(b) The district courts shall have original jurisdiction of any civil action asserting a claim of unfair competition when joined with a substantial and related claim under the copyright, patent or trade-mark laws.

INDEX

	Page
Interest of the United States	1
Argument	3
I. A patentee guilty of misuse cannot be deemed to have "purged" himself until he has fully restored the *status quo ante* by relinquishing the restrictive contracts	3
II. A dominant firm may not preserve its market control by requiring grant-backs	6

CITATIONS

Cases:

B.B. Chemical Co. v. *Ellis*, 314 U.S. 495 ..... 4, 5, 6
Carbice Corp. v. *American Patents Corp.*, 283 U.S. 27 2
Ethyl Gasoline Corp. v. *United States*, 309 U.S. 436 5
International Salt Co. v. *United States*, 332 U.S. 392 ..... 5, 7
Edward Katzinger Co. v. *Chicago Metallic Mfg. Co.*, 329 U.S. 394 5–6
Leitch Mfg. Co. v. *Barber Co.*, 302 U.S. 458 7
MacGregor v. *Westinghouse Elec. & Mfg. Co.*, 329 U.S. 402 5
Mercoid Corp. v. *Mid-Continent Inv. Co.*, 320 U.S. 661 ..... 1, 10
Morton Salt Co. v. *G. S. Suppiger Co.*, 314 U.S. 488 ..... 1, 2, 5, 7, 10
Motion Picture Pats. Co. v. *Universal Film Mfg. Co.*, 243 U.S. 502 2
Northern Pacific R. Co. v. *United States*, 356 U.S. 1 3
Pennock v. *Dialogue*, 2 Pet. 1 1
Pope Mfg. Co. v. *Gormully*, 144 U.S. 224 2
Sola Elec. Co. v. *Jefferson Elec. Co.*, 317 U.S. 173 6
Times-Picayune Pub. Co. v. *United States*, 345 U.S. 594 ..... 8, 9
Transparent-Wrap Mach. Corp. v. *Stokes & Smith Co.*, 329 U.S. 637 ..... 7, 8, 10
United States v. *Aluminum Co. of America*, 91 F. Supp. 333 8

591070—61

Cases—Continued

	Page
United States v. *Bausch & Lomb Co.*, 321 U.S. 707	5
United States v. *Columbia Steel Co.*, 334 U.S. 495	8
United States v. *General Electric Co.*, 80 F. Supp. 989	8, 9
United States v. *General Electric Co.*, 82 F. Supp. 753	8
United States v. *Griffith*, 334 U.S. 100	9
United States v. *Paramount Pictures, Inc.*, 334 U.S. 131	8
United States v. *United Shoe Machinery Corp.*, 110 F. Supp. 295, affirmed *per curiam*, 347 U.S. 521	9
United States v. *Univis Lens Co.*, 316 U.S. 241	5

Statute:

Sherman Act, Sec. 2, 15 U.S.C. 2	9

Miscellaneous:

Chafee, *Some Problems of Equity* (1950)	5
Antitrust Subcomm. of the House Comm. on the Judiciary, 86th Cong., 1st Sess., *Report on Consent Decree Program of the Department of Justice* (Comm. Print 1959)	8
Staff of the Subcomm. on Patents, Trademarks, and Copyrights, Senate Comm. on the Judiciary, 86th Cong., 2d Sess., *Compulsory Patent Licensing Under Antitrust Judgments* (Comm. Print 1960)	8
Staff of Subcomm. No. 5, House Comm. on the Judiciary, 84th Cong., 2d Sess., *Antitrust Problems in the Exploitation of Patents* (Comm. Print 1956)	8

In the Supreme Court of the United States

OCTOBER TERM, 1960

No. 501

BINKS MANUFACTURING COMPANY, PETITIONER

v.

RANSBURG ELECTRO-COATING CORPORATION

ON WRIT OF CERTIORARI TO THE UNITED STATES COURT OF APPEALS FOR THE SEVENTH CIRCUIT

MEMORANDUM FOR THE UNITED STATES AS AMICUS CURIAE

INTEREST OF THE UNITED STATES

This case presents important issues of public policy with respect to the scope of the defense based on misuse of patent rights. While the United States has no concern with the private interests involved in infringement litigation, it is concerned with the vindication of the dominant public interest in the administration of the patent system. *Mercoid Corp.* v. *Mid-Continent Inv. Co.*, 320 U.S. 661, 665; *Morton Salt Co.* v. *G. S. Suppiger Co.*, 314 U.S. 488, 493; see *Pennock* v. *Dialogue*, 2 Pet. 1, 19. One of the most effective safeguards of the public interest in this field has been the

refusal of the courts to lend their aid to the enforcement of patent rights where the patents have been misused to subvert public policy. *Morton Salt*, 314 U.S. at 494; see *Carbice Corp.* v. *American Patents Corp.*, 283 U.S. 27; *Motion Picture Pats. Co.* v. *Universal Film Mfg. Co.*, 243 U.S. 502; *Pope Mfg. Co.* v. *Gormully*, 144 U.S. 224.

We believe that the courts below failed to give adequate recognition in this case to the public importance of the misuse doctrine, and to applicable decisions of this Court. The result has been an unwarranted narrowing of the scope of the doctrine, with consequent erosion of the competitive policy underlying the doctrine's existence.

Although the case presents other issues of public importance, we have confined ourselves to two questions, either of which could be dispositive of the proceedings in this Court:

(1) Whether a patentee guilty of misuse should be deemed to have "purged" the misuse if he fails to take adequate affirmative steps to restore the *status quo ante* and to relinquish the direct fruits of misuse, *i.e.*, the restrictive contracts.

(2) Whether a dominant firm may perpetuate its market power by use of grant-back licenses.

ARGUMENT

I. A PATENTEE GUILTY OF MISUSE CANNOT BE DEEMED TO HAVE "PURGED" HIMSELF UNTIL HE HAS FULLY RESTORED THE *STATUS QUO ANTE* BY RELINQUISHING THE RESTRICTIVE CONTRACTS

We assume, at the outset, that respondent's licensing practices prior to 1953 constituted misuse of the patent, in that unpatented goods and services were effectively tied-in with the licenses. Compare, *Northern Pacific R. Co.* v. *United States*, 356 U.S. 1. The fact that every one of respondent's hundred-odd pre-1953 licenses was made on the tie-in basis (see R. I: 205) is persuasive evidence that securing a license on any other terms was not an alternative available to customers in any realistic sense. Moreover, the 1953 attempt at purgation, or as respondent would have it, "effort * * * to be sure that all of its customers and prospective licensees knew and understood that they had * * * freedom of choice" (Br. in Opp. at 21), reveals a distinct awareness by the patentee that its prior licensing practices were improper or, at best, doubtful. The essential question, then, to which we turn, is whether the respondent should be deemed to have "purged" itself of its patent misuse.

This Court concisely summed up the applicable

principle in *B. B. Chemical Co.* v. *Ellis,* 314 U.S. 495, 498:

> It will be appropriate to consider petitioner's right to relief when it is able to show that it has fully abandoned its present method of restraining competition in the sale of unpatented articles and that the consequences of that practice have been fully dissipated.

In the present case, the patentee sought to purge the prior misuse by informing its licensees that they might terminate their tie-in licenses, return the formerly tied equipment, and then take out new licenses on the process alone, with the right to secure the equipment to be used with the process from whatever source they pleased (see R. II: 730–31).[1] The petitioner urges that the terms of this offer did not, for practical economic reasons, provide a feasible alternative for the licensees (primarily because there was no refund of the large initial sum previously charged for lease of the equipment), and that therefore there was no real purging of the misuse (Br. for Pet. at 36–38); petitioner further urges that post-1953 licensees were not offered a truly non-tie-in alternative to the tie-in lease (*id.* at 38–41). We submit, however, that, apart from the economic impracticability or practicability of the alternative license options offered, the action taken by this patentee was insufficient to dissipate fully the consequences of its previous misuse and thereby re-entitle it to invoke the assistance of the courts in enforcing the patent.

[1] No licensee took advantage of this offer (R. I:205).

A patentee guilty of misuse should not be deemed fully to have abandoned his restrictive practices and fully to have dissipated their consequences, within the requirement of the *Ellis* case, until there has been a full restoration of the *status quo ante*. It is not sufficient that the patentee announce that the practice has been abandoned, or that he affirm that he will desist from future misuse. The equitable principle that he who would invoke equity must do equity requires,[2] we submit, a more complete purgation, *i.e.*, complete relinquishment of the restrictive contracts. In doing so, the patentee may find himself required to adhere to a standard of conduct more stringent than would have been demanded of him if he had never been guilty of misuse, but the transgressor must expect his behavior to be more hedged about than that of one who writes on a clean slate. See *International Salt Co.* v. *United States*, 332 U.S. 392, 400; *United States* v. *Bausch & Lomb Co.*, 321 U.S. 707, 724; *United States* v. *Univis Lens Co.*, 316 U.S. 241, 254; *Ethyl Gasoline Corp.* v. *United States*, 309 U.S. 436, 461. As this Court suggested in an antitrust decision involving similar abuse of a patent (*International Salt, supra*), the patent misuser is not "entitled to stand before the court in the same position as one who has never violated the law at all."

---

[2] For discussion of the assimilation of the "clean hands" maxim to the maxim "He who seeks equity must do equity," particularly in relation to patent misuse, see Chafee, *Some Problems of Equity* 55–61, 100 (1950). The doctrine of the *Morton Salt* case is, of course, applicable both in law and equity. See *MacGregor* v. *Westinghouse Elec. & Mfg. Co.*, 329 U.S. 402; *Edward Katzinger Co.* v. *Chicago Metallic Mfg.*

In the light of these principles, we suggest that the rule of the *Ellis* case may be restated for present purposes as follows: where there has been misuse, it can be abandoned, and the *status quo* restored, only by giving up the restrictive contracts. In the circumstances of the present case, the condition precedent to respondent's enforcement of its patent was, in our view, cancellation of all its existing tie-in licenses, followed by an offer to the former licensees of their choice of buying unpatented goods and services either from respondent or any other purveyor.[3] Like the patentee in the *Ellis* case, respondent has not shown the Court that it has fully abandoned its practices and that their consequences have been fully dissipated; until this indispensable condition precedent has been satisfied, respondent has no right to relief.

II. A DOMINANT FIRM MAY NOT PRESERVE ITS MARKET CONTROL BY REQUIRING GRANT-BACKS

Between 1951 and 1953, respondent required from its licensees, as a condition of issuing the license (see R. I: 649–50), a promise to grant-back any improvements on or inventions related to airless electrostatic spraying.[4] Although the practice of ex-

---

Co., 329 U.S. 394; *Sola Elec. Co.* v. *Jefferson Elec. Co.*, 317 U.S. 173.

[3] If the existence of the six-month's termination clause (see R.I: 118, 125, 133, 140–41, 148) were deemed coercive in this respect, its elimination would appear appropriate as well. See also the discussion of the grant-back provision, *infra*, pp. 6–10.

[4] Typical such clauses are quoted at R. I: 196–97. See also R. I: 120, 127–28, 135, 143 (Par. 11 in forms D–23, D–25, D–26, D–29).

acting these restrictive covenants was abandoned in 1953, there were 133 licenses with grant-back agreements still outstanding in 1956 when this action was brought (see R. I: 152–177). We submit that respondent's retention of these contracts constituted patent misuse from which it had not purged itself when the suit was brought; for this reason respondent may not invoke the assistance of the federal courts to enforce the patents. Cf. *Morton Salt Co.* v. *G. S. Suppiger Co.*, 314 U.S. 488. It is unclear whether the court of appeals based its determination that the grant-back clause was lawful on the erroneous supposition that the patentee had abandoned its use and the consequences of any misuse had been dissipated, or on the equally erroneous view that grant-backs can be held illegal only when adopted pursuant to an industry-wide conspiracy among competitors (see R. IV: 849).

The legality of grant-back clauses in patent licenses was before this Court in *Transparent-Wrap Mach. Corp.* v. *Stokes & Smith Co.*, 329 U.S. 637. The issue was presented more narrowly there, however, since the only question was whether the court below (speaking through Judge Learned Hand) had improperly applied the rule of the patent tie-in cases (see *International Salt Co.* v. *United States*, 332 U.S. 392; *Morton Salt Co.* v. *G. S. Suppiger Co.*, 314 U.S. 488; cf. *Leitch Mfg. Co.* v. *Barber Co.*, 302 U.S. 458; *Carbice Corp.* v. *American Patents Corp.*, 283 U.S. 27) when it held grant-backs illegal *per se*. The Court reversed and remanded, by a closely divided vote, on the ground that inclusion of the clause in the license was

not illegal *per se*, and that an inquiry into the actual or probable effect of the practice on competition in the industry was appropriate in order to gauge its lawfulness. Compare *Times-Picayune Pub. Co.* v. *United States*, 345 U.S. 594, 614; *United States* v. *Columbia Steel Co.*, 334 U.S. 495, 521 & n. 18, 523–25; *United States* v. *Paramount Pictures, Inc.*, 334 U.S. 131, 173–74. In remanding, the Court emphasized that exacting grant-backs could be illegal were the effect to restrain trade or perfect monopoly power such as by perpetuating the effective life of a basic patent. 329 U.S. at 646–47. See also *United States* v. *Aluminum Co. of America*, 91 F. Supp. 333, 410 (S.D.N.Y.); *United States* v. *General Electric Co.*, 82 F. Supp. 753, 815–16 (D. N.J.); *United States* v. *General Electric Co.*, 80 F. Supp. 989, 1005–06 (S.D.N.Y.).[8]

The case at bar differs from the *Transparent-Wrap* case in that the restrictive practice is being employed

[8] We note that Congress has shown increasing concern with the impact of grant-backs on industry. See, *e.g.*, Staff of the Subcomm. on Patents, Trademarks, and Copyrights, Senate Comm. on the Judiciary, 86th Cong., 2d Sess., *Compulsory Patent Licensing Under Antitrust Judgments* 41–52 (Comm. Print 1960); Antitrust Subcomm. of the House Comm. on the Judiciary, 86th Cong., 1st Sess., *Report on Consent Decree Program of the Department of Justice* 107–20 (Comm. Print 1959); Staff of Subcomm. No. 5, House Comm. on the Judiciary, 84th Cong., 2d Sess., *Antitrust Problems in the Exploitation of Patents* 16 (Comm. Print 1956).

by the dominant firm in the industry.* Moreover, the record indicates that the impact of the agreements has been to discourage further invention in the industry (see R. I: 487, testimony of Harold Ransburg). A monopoly maintained in part by grant-backs is not one "thrust upon" the patentee by his lawful patent grants (see *United States* v. *General Electric Co.*, 80 F. Supp. at 1015), but instead contravenes the proscriptions of Section 2 of the Sherman Act, 15 U.S.C. 2. *United States* v. *Griffith*, 334 U.S. 100, 107–108; *United States* v. *United Shoe Machinery Corp.*, 110 F. Supp. 295, 342 (D. Mass.), affirmed *per curiam*, 347 U.S. 521. For here the lawful patent monopoly deliberately is being buttressed and its scope extended by a device which precludes competitors from staking out their own patent position and inevitably results in discouragement of experimentation by any but the

* Respondent is the only manufacturer and supplier of airless electrostatic spray systems (R. I: 47, 200, 201, 210). Although the district court made no findings on this score (cf. R. II: 1010–11), we believe that airless electrostatic spraying may be deemed the relevant market for the purposes of this Court's consideration. See *Times-Picayune Pub. Co.* v. *United States*, 345 U.S. 594, 611, n. 30. The district court suggested that, for some painting purposes, airless electrostatic spraying has peculiar uses and characteristics which render no other system reasonably interchangeable with it—price, use, and qualities considered (See Fndg. 83, R. II: 1011). Should the case be remanded, respondent would not be precluded from urging a wider relevant market. Cf. 329 U.S. at 648.

monopolist. In any event, such maintenance of market dominance constitutes misuse of the patents involved,[1] and it therefore bars enforcement of the rights conferred by the grant.

Respectfully submitted.

ARCHIBALD COX,
Solicitor General.

LEE LOEVINGER,
Assistant Attorney General.

RICHARD A. SOLOMON,
RICHARD H. STERN,
Attorneys.

APRIL 1961.

---

[1] Conduct falling short of a prohibited restraint of trade or monopoly may constitute misuse, see 329 U.S. at 641; *Morton Salt*, 314 U.S. at 490. The test of misuse is whether the patentee is attempting to extend his monopoly beyond the scope of his patent grant. 329 U.S. at 640–41; *Mercoid Corp.* v. *Mid-Continent Inv. Co.*, 320 U.S. 661, 670.

U.S. GOVERNMENT PRINTING OFFICE: 1961

FILE COPY

Office-Supreme Court, U.S.
FILED
APR 27 1961
JAMES P. BROWNING, Clerk

IN THE

Supreme Court of the United States

October Term, 1960

No. 501

BINKS MANUFACTURING COMPANY,
Petitioner,

vs.

RANSBURG ELECTRO-COATING CORP.,
Respondent.

On Writ of Certiorari to the United States Court of Appeals for the Seventh Circuit

BRIEF FOR RESPONDENT RANSBURG ELECTRO-COATING CORP.

ELBERT R. GILLIOM,
1344 Consolidated Building,
Indianapolis 4, Indiana,

JAMES P. HUME,
38 South Dearborn Street,
Chicago 3, Illinois,

HARRY T. ICE,
Tenth Floor, 111 Monument Circle,
Indianapolis 4, Indiana,

VERNE A. TRASK,
801 Hume-Mansur Building,
Indianapolis 4, Indiana,

Attorneys for Respondent.

307 BAR PRESS INC., 54 LAFAYETTE ST., NEW YORK 13 — WA 5-3432

INDEX

	PAGE
OPINIONS BELOW	1
JURISDICTION	2
STATUTES INVOLVED	2
QUESTIONS PRESENTED	3
STATEMENT OF THE CASE	4
THE FACTS	6
A. The Parties	6
B. The Ransburg No. 1 Process	7
C. The Ransburg No. 2 Process	8
D. Dealings with Ford	13
SUMMARY OF ARGUMENT	16
ARGUMENT	19
I—The record amply supports the conclusion of both courts below that Ransburg has not tied equipment to patent licenses	20
II—Ransburg never required any prospective licensee, as a condition to receiving a license under one patent, to take or pay for a license under any other patent	28

PAGE

III—Ransburg's inclusion of a limited grant-back provision in certain license agreements, during the early field experience of No. 2, was reasonable and lawful 31

IV—There was no fraud in the procurement of the patents in suit 35

Conclusion 37

AUTHORITIES CITED

Cases:

A. & P. Tea Co. v. Supermarket Corp., 340 U. S. 147 [1950] 37

American Security Co. v. Shatterproof Glass Corp., 268 F. 2d 769 [C. A. 3, 1959], cert. den., 361 U. S. 902 [1959] 28

Commissioner v. Duberstein, 363 U. S. 278 [1960] 20

Continental Paper Bag Co. v. Eastern Paper Bag Co., 210 U. S. 405 [1908] 35

Hartford Empire Co. v. United States, 323 U. S. 386 [1945] 31

International Salt Co. v. United States, 332 U. S. 392 242 [1958] 20

International Salt Co. x. United States, 332 U. S. 392 [1947] 20

Northern Pacific Rwy. Co. v. United States, 356 U. S. 1 [1958] 20, 21

PAGE

Smith v. Snow, 294 U. S. 1 [1934] 35

Times-Picayune Publishing Co. v. United States, 345 U. S. 594 [1953] 20

Transparent-Wrap Mach. Corp. v. Stokes & Smith Co., 329 U. S. 637 [1947] 20, 31, 38

United States v. General Electric Co., 80 F. Supp. 989 (S. D. N. Y., 1948) 31

United States v. General Electric Co., 115 F. Supp. 835 (D. N. J. 1953) 34

United States v. Jerrold Electronics Corp., 187 F. Supp. 545 (E. D. Pa. 1960) aff'd per curiam March 20, 1961, 29 L. W. 3275 26

Universal Oil Co. v. Globe Co., 322 U. S. 471 [1943] 35

Statutes:

28 U. S. C. 1254 (1) 2

35 U. S. C. A. §285 5

Clayton Act (38 Stat. 731) 2

Section 3 2

Sherman Act (26 Stat. 209) 2

Other Authorities:

Report of the Attorney General's National Committee to Study the Antitrust Laws [1955], p. 138 20

Report of the Attorney General's National Committee to Study the Antitrust Laws [1955], p. 229 34

The Use of Tie-Ins in New Industries, 70 Y. L. J. 804 26

Walker on Patents, Deller's Ed., Sec. 383 30

IN THE

Supreme Court of the United States

October Term, 1960

No. 501

BINKS MANUFACTURING COMPANY,
Petitioner,

vs.

RANSBURG ELECTRO-COATING CORP.,
Respondent.

On Writ of Certiorari to the United States Court of Appeals for the Seventh Circuit

BRIEF FOR RESPONDENT

Opinions Below

Findings of Fact and Conclusions of Law by the District Court for the Southern District of Indiana (R. II: 968-1015) are reported at 122 U. S. P. Q. 74. The opinion of the Court of Appeals (R. IV: 838-851), affirming the District Court judgment, is reported at 281 F. 2d 252.

Jurisdiction

The Court of Appeals' judgment was entered on July 27, 1960. Petition for writ of certiorari was lodged by Binks on October 24 and granted by this Court December 19, 1960. Jurisdiction of this Court is invoked under 28 U. S. C. 1254(1).

Statutes Involved

The Act of July 2, 1890, 26 Stat. 209, known as the Sherman Act, provides in part as follows:

> "Sec. 1 [as amended by the Act of August 17, 1937, 50 Stat. 693]. Every contract, combination in the form of trust or otherwise or conspiracy, in restraint of trade or commerce among the several States, or with foreign nations, is hereby declared to be illegal: * * * [15 U. S. C. 1].
>
> "Sec. 2. Every person who shall monopolize, or attempt to monopolize, or combine or conspire with any other person or persons, to monopolize any part of the trade or commerce among the several States, or with foreign nations, shall be deemed guilty of a misdemeanor, * * * [15 U. S. C. 2]."

Section 3, Act of October 15, 1914, 38 Stat. 731, known as the Clayton Act, provides in relevant part:

> "* * * it shall be unlawful * * * to lease, or make a sale or contract of sale of goods, wares, merchandise, machinery, supplies or other commodities * * * on the condition, agreement or understanding that the lessee or purchaser thereof shall not use or deal in the goods,

wares, merchandise, machinery, supplies or other commodities of * * * competitors of the lessor or seller, where the effect * * * may be to substantially lessen competition or tend to create a monopoly in any line of commerce."

Questions Presented

Respondent Ransburg developed, and in 1954 secured a process patent on, a new electrostatic spray-painting system, the Ransburg "No. 2 Process," which was unique in that it was airless, or did not use compressed air to atomize paint. This system was so different from what had gone before, that key equipment needed to work it was "not available on the market" (Fndg. 11; R. II: 979). To fill this gap and "to be in a position to interest prospective licensees in the process" (Fndg. 10; R. II: 978), Ransburg was forced to develop certain specialized components of a No. 2 apparatus, which was patented in 1957 (R. II: 1029-35). Features of Ransburg's policy in trying to market its patented process, and to provide its customers with the specialized equipment needed to work it, lie at the heart of the basic issue whether Ransburg misused its No. 2 patents in violation of the antitrust laws. Resolution of this issue turns on the following questions presented here:[1]

1. Whether the Court of Appeals erred in sustaining the District Court's Finding of Fact that Ransburg "has never at any time required that any person desiring a license under" its process patent "must obtain from it, or pay for, equipment, installation supervision, or part-replacement service as a condition to the granting of the license" (Fndg. 66; R. II: 1002).

[1] The Memorandum for the United States as *Amicus Curiae*, received on April 17, 1961, expresses interest only in the subject matter of Questions 1 and 3 below, and is answered in the Argument herein.

2. Whether the Court of Appeals erred in sustaining the District Court's Findings of Fact that Ransburg "has never required any prospective licensee, as a condition to receiving a license under any patent, to take or pay for any license under any patent which did not apply to the system described in the license agreement"; and that "No licensee • • • has at any time received or paid for a license under any patent which did not apply to the system described in the license agreement" (Fndg. 71; R. II:1004).

3. Whether the Court of Appeals erred in sustaining the District Court's Finding of Fact that Ransburg's provision in certain of its early licensing agreements for "grant back to" it of "a royalty-free, • • • non-exclusive license, with right to sublicense, under any patents, inventions, or improvements acquired by licensee" within a limited period "relating to air-less electrostatic coating" "has not stifled or discouraged research or invention by licensees," and in affirming the conclusions that the "grant back" provision did not constitute patent misuse or violation of the antitrust laws (Fndg. 84, Conclusions 2 and 3; R. II:1012, 1014).

4. Whether the Court of Appeals erred in sustaining the District Court's Finding of Fact that, in obtaining the patents in suit, Ransburg made no "misrepresentations" to the Patent Office (Fndg. 91; R. II: 1013).

Statement of the Case

On October 11, 1956, Binks brought this suit seeking a declaratory judgment that Ransburg's process patent on its airless No. 2 painting system was invalid and had been misused and also alleging that Ransburg had violated the antitrust laws. After preliminary discovery proceedings brought out that Binks had actually used the airless system,

Ransburg answered and, as required by Rule 13(a), counter-claimed, charging Binks with infringement by practicing the patented process. Binks replied, denying infringement and reasserting invalidity, misuse, and antitrust law violations. After Binks, with leave of court, dismissed its orginal complaint, Ransburg's No. 2 apparatus patent issued and, via amended pleadings, became a subject of the same charges and allegations (R. II: 973). Later, all pleadings were consolidated in a set of substituted pleadings (R. I:1-45).

The issues joined, and extensive discovery completed, trial began in December 1958. "The evidence of both parties," as the District Court put it, "consisted of exhibits, records, written evidence, admissions, stipulations, interrogatories and depositions. The plaintiff offered no testimony of witnesses in the presence of the Court at the trial. The defendant in addition offered testimony of witnesses in the presence of the Court at the trial who were vigorously cross-examined" (R. II: 974-75).

Trial concluded in January 1959. And in June of that year, the District Court entered detailed Findings of Fact and Conclusions of Law—holding Ransburg's No. 2 process and apparatus patents valid and enforceable and Ransburg's licensing policy not afoul of the antitrust laws (R. II:968-1015). These findings and conclusions the Court of Appeals affirmed. It held that "The evidence supports a conclusion that plaintiff failed to establish that defendant has engaged in any activity beyond the exercise of rights incident to its patent monopoly" (R. IV:847 [2]).

---

[2] The Court of Appeals did reverse the District Court's grant of attorneys' fees to Ransburg reasoning that "the facts do not justify a conclusion that there is herein presented the 'exceptional case' in which attorneys' fees are allowable under 35 U. S. C. A. §285" (R. IV: 850). This decision Ransburg does not challenge here.

The Facts

A. *The Parties:*

From proceedings below emerge those facts which mould issues now here.[3] Plaintiff Binks, the District Court found, has "for many years" been engaged in "manufacturing and selling spraying equipment for paint and other materials" (Fndg. 12; R. II: 979). In "business since 1892", Binks "has branch offices or warehouses in twenty-eight major cities in the United States and Canada, sells a line of merchandise under the slogan 'Everything For Spray Painting', and is one of the two largest merchandisers of spray-painting equipment in the United States," the other being De Vilbiss (Fndg. 12; R. II:979-80; R. III: 234). Binks "in many instances sells complete finishing facilities as a package" (*ibid.*).

Ransburg, in contrast, "had its origin in an individual proprietorship, operated by Harper J. Ransburg, * * * who was engaged in the manufacture and sale of a variety of houseware items, such as canister sets, bread boxes and similar accessories" (Fndg. 7: R. II: 976-77). Harper Ransburg "was assisted in this business by his three sons" and "in 1941, they formed a partnership * * *" (Fndg. 7; R. II: 977). From this partnership grew defendant Ransburg, incorporated in 1948, but with sole owners, officers, and directors still "the four Ransburgs" (*ibid.*).

Harper Ransburg's interest in paint spraying began with concern for improving methods and reducing costs in coating the housewares he vended. At that time, those wares were coated "by means of compressed-air spray guns, much of the material sprayed [was] not deposited

[3] Since each of the issues here turns essentially on the Findings of Fact of the District Court, concurred in by the Court of Appeals, the Findings (except those not bearing on the issues here) with references to the supporting testimony and documentary evidence are reprinted as an Appendix to Respondent's Brief submitted herewith.

upon the article, but [was] carried beyond it by the air blasts and [was] lost as 'overspray'; and a substantial investment and expense [was] necessary in installing, maintaining and operating spray booths, paint collecting devices, and exhaust systems" (Fndg. 8; R. II:977). So it was that "in about 1937" he and his sons began "experiments in using a high-voltage electrostatic field to deposit more efficiently upon articles of manufacture coating material atomized by conventional compressed-air spray guns. As the result of this work, they developed their 'No. 1 Process' * * *" (Fndg. 9; R. II:977).

B. *The Ransburg No. 1 Process:*

Though Ransburg's No. 1 Process "is not in issue" here (R. II: 968), problems Ransburg faced in operating and marketing this predecessor method form helpful background for present issues. Unlike the No. 2 Process now before this Court, *No. 1 did not involve airless electrostatic spraying.* Instead, "articles to be spray-painted were conveyed past an electrode. The articles were grounded, while an electric potential on the order of 90,000 volts was applied to the electrode to create an electrostatic field between it and the articles moving past it. A paint spray formed outside that field *by conventional compressed-air spray guns* was directed into the field with the result that the sprayed particles acquired electrical charges which caused them to be attracted to the articles" (Fndg. 19; R. II: 983; emphasis added).

Since the No. 1 Process (marketed beginning in 1944) used mainly conventional equipment, ready sources of supply other than Ransburg were available for most items. Thus, to cull from the District Court's Findings, "The conventional items such as conveyors, ovens and spray guns were not supplied by" Ransburg "but were purchased by * * * licensees from the plaintiff [Binks] and other sup-

pliers'' (R. II:968).[4] Thus, since Binks' ''line,'' in Binks' President's words, ''was standard'' (R. III: 218 and see R. I:687), and Ransburg's No. 1 Process utilized many ''conventional items,'' Binks could and did supply equipment to No. 1 Process licensees.

However, the No. 1 Process still left considerable room for improvement. For ''even with the benefit of electrostatic forces, paint losses in this method'' nonetheless amounted ''to as much as about one-third of the paint sprayed'' (Fndg. 19; R. II: 983). Accordingly, ''The Ransburg partnership continued its research and development work, and as a result thereof developed its No. 2 Process by which articles could be coated electrostatically *without the necessity of compressed-air spray guns to atomize the material*'' (Fndg. 11; R. II: 979; emphasis added).

C. *The Ransburg No. 2 Process:*

The No. 2 Process sprang from an interesting background (R. I: 361). The ''Ransburg organization,'' in the words of Dr. Emery Miller, Ransburg's research aide, ''was

[4] In point here is the testimony of Benjamin J. Hedger, Binks' Sales Manager (R. III:255-56):

> ''Q. Isn't it true that in all cases where the No. 1 type of system has been employed * * * that the regular suppliers of the air gun and associated equipment there on the market have supplied that equipment?
>
> A. Well, they have supplied that equipment.
>
> Q. In other words, Ransburg had never gone into the business of manufacturing air guns and the type of equipment that Binks makes?
>
> A. Not to my knowledge.''

Similarly, note the testimony of Harold P. Ransburg (R. III:169-70):

> ''Q. Licensing people to use the No. 1 Process, did you supply them the compressed air spray guns that were used with it?
>
> A. We did only where it was necessary. During the war, we had very slow delivery on those, and we put in a small stock of them to supply urgent needs, if someone was pressed

preparing an exhibit of the No. 1 Process which was to be taken to a metal show in Chicago * * *" (R. I:.360). "[A]n object such as a small canister [was to] be hung from a grounded support centrally in an electrostatic field" and coated with a spray gun "to portray to the observer the wrap-around characteristics and, therefore, the increased efficiency of our process." (*ibid.*). Touching up the exhibit, a Ransburg employee, Starkey by name, "was going over the control cabinet and the platform on which it was with a paint brush * * *. At the same time there was one of the other boys * * * involved in attaching and testing the high voltage supply. In the process, the paint brush Mr. Starkey was using came into the influence of the field and positioned opposite the metallic grounded side wall of the control panel, and he observed that, under those circumstances, the coating material atomized and broke up off the ends of the brush and was collected on * * * the grounded surface of the control panel, and the invention, I think, was born at that point" (R. I:361).

Building from this beginning, experiments continued. By the fall of 1944, work was far enough along on the

---

for them, and as soon as deliveries became loosened up, we had them get them directly from one of the standard suppliers.

Q. Who were some of those suppliers from which you obtained these parts?

A. DeVilbiss, Binks and Pasche.

Q. From what general sources did your licensees from the air type system obtain their paint spray booths, exhaust systems, conveyors and so forth?

A. That varied considerably. As far as spray booths are concerned, the majority of them did get them from either Binks or DeVilbiss or from R. C. Mahoney, Ross Engineering—some of the conveyor and other people also supplied spray booths as well as the spray equipment manufacturers.

Q. Well, briefly, then, you supplied none of that to these licensees, do I state that correctly?

A. That is right. I think there might be one exception, for one local organization where they had a union problem, we did supply some sheet metal booths as an assistance to the customer. But we preferred not to.

process for Ransburg to apply for a patent on its No. 2 Process (R. II: 969). "[S]ystems which exemplify the 'No. 2 Process' employ no air for atomizing the paint or forming the spray, reduce paint losses to 1% or 2% of the paint sprayed, and can be practiced in the open shop without the necessity for expensive paint exhaust and overspray recovery equipment". (Fndg. 20; R. II: 984).

Despite these savings, Ransburg faced real difficulties getting its new process off the ground. On the one hand, "Satisfactory performance of • • • [the No. 2 Process] depends upon the character and quality of the specialized equipment incorporated therein" (Fndg. 64; R. II: 1000). Beyond maximum technical performance, less than optimum equipment increased the "possibility of a lethal shock", as well as the "likelihood of a fire" (R. III: 205). On the other hand, "much of the specialized equipment required for the practice of defendant's processes was and is not available on the open market" (Fndg. 65; R. II: 1001).

Consider, for one example, the power packs needed to supply high voltage for electrostatic painting, by either the air-type or airless method. Around 1944, there were no "voltage supplies or power packs available generally on the market which were safe for the use" in an electrostatic painting "process" (R. III: 168). To meet this problem, as a first resort Ransburg "principally worked with the General Electric Company; • • • [it] also had correspondence and some contacts with Westinghouse, their X-ray Division, and some of the other X-ray companies" (R. III: 168). Though "General Electric • • • seemed more interested in the possibilities of working with • • • [Ransburg], it would take them six or eight months, maybe, to design them and perhaps ten months to deliver one" (R. III: 168-69). The upshot was that they "seemed to bog down to some very lengthy discussions [and Ransburg] finally designed one • • • [itself] with the help of Dr. Miller from Purdue" (*ibid.*).

Much the same went for "a standard circulating system or pressure regulators" (R. I: 710). As Binks' own engineer put it, Ransburg, for its No. 2 Process "couldn't use a standard circulating system or pressure regulators that we [Binks] had used in our line. They [Ransburg] *even requested us* [Binks], at one time, to make up a special regulator to operate at the low pressures that they needed" (*ibid*, emphasis supplied).

Nowhere to be found were the completely new airless "atomizers"—the heart of the No. 2 Process. As the District Court found, "Inasmuch as the special paint atomizers and accurately controllable paint supply systems required for operation of the No. 2 Process were not available on the market, defendant designed and produced them and furnished them to licensees as part of the specialized equipment" (Fndg. 11; R. II: 979).

Finally, the particular equipment needed by the individual customers varied widely. As Harold Ransburg explained: "As we made more and more progress * * * we found various ramifications where variations * * * helped particular applications or coating of certain objects, there became a wide range of different types of atomizers and deflecting electrodes and so forth" (R. III: 173). And again, "each different product or each different set of circumstances dictates the particular design that we recommend and that is modified depending upon the customer's stated wishes * * *" (R. III: 177).

So it was that, to cull again from the District Court's Findings, "in order to be able to market its processes", Ransburg was compelled[5] to produce "much of the specialized equipment required for the practice of * * * [its] processes" (Fndg. 65; R. II: 1001). Its "intent was to make nothing that was readily available" (R. III: 174).

[5] Underscoring Ransburg's disinclination to itself get into the making of equipment is the testimony of Ransburg's Director of Technical Services regarding "reciprocators": "We furnished a few reciprocators in the very beginning until outside suppliers were found who would be better equipped to manufacture and make the reciprocators" (R. I:582).

Undertaking this task of providing only "the minimum specialized equipment needed" (Fndg. 68; R. I: 1003), the "first license of the No. 2 Process was granted by * * * [Ransburg] in 1949, under a special consulting and research agreement" with one company. And "General marketing of the system was commenced in 1951" (Fndg. 11; R. II: 979).

To aid in marketing its process, Ransburg geared its charges to the benefits to the user. Thus, as the District Court found, "monthly fees" represented simply "a portion of the user's savings resulting from the use of the system" (Fndg. 62; R. II: 999). The Ransburg system of charges geared to paint savings makes possible the use of the process by small companies such as Tonka Toy, Inc. of Mound, Minnesota and Metal Bed Rail Co. of Lexington, North Carolina, as well as extensive use by industrial giants such as General Electric Co. and its subsidiaries (R. I: 161, 163, 166, 174).

Similarly, to convince customers by meeting their particular needs, Ransburg would "set up" a "painting operation", as a "pilot", for any "prospect without obligation, employing his [the prospect's] products and coating material and simulating the conditions existing or contemplated in his plant" (Fndg. 61; R. II: 999). And, "If the prospect remains interested", Ransburg, obviating high initial costs, would lease the specially designed apparatus, with minimal initial charges and monthly fees, again proportioned to paint savings (Fndgs. 61, 62; R. II: 999-1000). For, in the words of one of the Ransburgs, "we compete with any other method of painting. It is our problem to convince someone we have a better method of doing it than several other ways that they can accomplish the same end" (R. III: 202).[6]

[6] "In painting many articles of manufacture, airless electrostatic, air-type electrostatic, non-electrostatic air-spray systems, flow-coating, roller-coating or dipping, can [be] and are substituted one for the other and are competitive" (Fndg. 83; R. II: 1011; Rice Dep., R. III: 262-64; Houlberg Dep., R. III: 270-73; Witness Harold Ransburg, R. III: 200-03).

As prospects for Ransburg's successful marketing of No. 2 brightened, Binks—true to its "slogan 'Everything for Spray Painting' "—became interested. In the words of the District Court's Finding, "Plaintiff's first knowledge of an airless electrostatic painting process was obtained from defendant's No. 2 system, after it was commercialized" (Fndg. 13; R. II: 980). Binks purchased a power pack in 1951 (Fndg. 14; R. II: 980). But Binks' "research was sporadic" through 1952; it was not until 1953 that Binks "retained Midwest Research Institute • • • to do research for it on electrostatic spray-painting • • •; such research was performed in 1953 and 1954" (Fndg. 14; R. II: 980-81).

However, on "August 3, 1954," Ransburg's No. 2 method patent issued (Fndg. 16; R. II: 981). Thereafter, the District Court found, Binks' "work in the field of airless electrostatic spray-painting became dormant"—that is, "until the negotiations with Ford Motor Company" which triggered the controversy here (*ibid.*). Ford was "the only prospective vendee to which • • • [Binks] has attempted to sell" its airless equipment (Fndg. 17; R. II: 981). And, apart from Ransburg, only Binks ever sought to supply the specialized "equipment for that airless type of system • • •" (R. I: 671).

D. *Dealings with Ford:*

Significant at this juncture, then, is the pattern of Ford dealings. One day "in the latter part of 1955", according to Binks' President, "an unsolicited request for a quotation came • • • through the mail" from Ford (R. I: 674)—a company that, for other painting equipment, had been one of Binks' "good • • • automotive accounts" (R. I: 679). "In response • • • on January 25, 1956" Binks "quoted its price upon [its airless] equipment with the express proviso: This bid shall not be binding • • • until Ford • • •

shall indemnify Binks * * * against any and all suits * * * which may be brought against Binks * * * for infringement and/or contributory infringement of Starkey *et al.* patent 2,685,536," the process patent here in suit (Fndg. 17; R. II: 981). This Ford was apparently unwilling to do.

Next followed an exchange of correspondence between Binks and Ransburg. Thus, on July 3, 1956 Binks wrote: "We have fully developed and are ready to market a paint sprayer which electrostatically atomizes the paint without making use of air. Since we understand from the trade you have a standard form of patent license, we would appreciate your sending us a copy * * *" (R. II: 894). A bit over a week later, on July 12, 1956, Ransburg sent its "standard license forms"—for paint users, either with *or* without Ransburg equipment—and said "We would appreciate an opportunity to get together with you and discuss any questions you may have" (R. II: 895).

However, Ransburg's standard license forms did not suit Binks. As Binks wrote, July 25, 1956, "This form of license would not be satisfactory to us as a manufacturer of spray equipment. Possibly you may have some other form of license that would be acceptable to us * * *" (R. II: 904). Since the basis for Binks' position was not clear, Ransburg, by way of response, inquired on August 16: "We will appreciate it if you will advise us what you have in mind" (R. II: 907).

About a week later Binks came back with the explanation "the submitted licenses * * * are not for the manufacture and sale of the actual spray equipment, but rather for the use of * * * equipment. What we are interested in is a license to make and sell equipment for this type of spray painting under your Starkey patent * * *" (R. II: 908).

Ransburg responded, on August 31, 1956, that it was in no position to license Binks "to make and sell" (R. II: 908), but could only "license [paint users] to use our process without reference to equipment" (R. II: 909). And

Ransburg added that, should its license forms be unsatisfactory for Binks' customers, "Under certain circumstances this license form could possibly be modified and if you have some suggestions in that direction or any other proposals to make we shall appreciate receiving them" (*ibid.*).

Some two weeks later, on September 12, Binks amplified the basis for its dissatisfaction (R. II: 910): "Our sales practice is such that any license agreements that we might enter into would have to require the payment of only one royalty at the time of each sale so that thereafter the customer's use of the equipment would be free of any further royalty payments * * *. Accordingly, would you consider granting a license requiring, in the instance of each sale of spray equipment, only a single royalty payment at a given rate of percentage of the sales price?"

With Binks' request that royalties be "based solely on the sales price of the equipment" Ransburg felt it could not comply. For this "would require a complete change in our marketing policy and a change of all of our licenses now in effect, as otherwise a large part of our licensees would be treated unfairly" (R. II: 911). However, in accordance with what had always been its policy,[7] Ransburg reiterated: "*We want you to know that licenses are available to your customers for painting with our method* * * *" (*ibid.*, emphasis added).

Underscoring Ransburg's good faith in not seeking to prevent Binks' entry into the equipment market is the pattern of Ransburg's dealings with Ford. While Binks

[7] "* * * it has always been the express policy of the defendant; and so understood by all of its officers and sales and management personnel, that if a prospective licensee preferred to obtain equipment elsewhere than from the defendant, he was free to do so and at reduced fees could obtain a license from defendant without equipment, installation supervision, or part-replacement service" (Fndg. 65; R. II: 1001; Witness Harold Ransburg, R. I: 463-64, R. III: 178-79, 180-84, 184-85, 185-88; R. III: 282-349; R. II: 753-55, 816-18; H. Ransburg Dep., R. I: 542-43; Pleva Dep., R. I:: 615-17; Witness Edwin Ransburg, R. III: 159).

was corresponding with Ransburg, Ford, too, wrote Ransburg. Thus, on July 6, 1956, Ford requested "a paid-up license with equipment"—Ransburg's equipment (R. I: 55). Ford's "paid-up" form request jibed closely with Binks' request for "a single royalty payment * * *" (R. II: 910). Ransburg *did* offer Ford a paid-up license, not to make and vend, but to use the process in consideration of a single payment representing the present value of the licensed future use. And, most important, Ransburg offered Ford licenses "both with and without equipment" (R. I: 56). So, in fact Ransburg—prior to learning of the Ford-Binks relationship—had already informed Ford, "the only prospective vendee" Binks ever had, that Ransburg would grant it a license without equipment, thus enabling it to obtain Binks' equipment (Fndg. 17; R. II: 981).

Ransburg's efforts, however, died aborning. For, on October 11, 1956—less than 60 days after Ransburg's offer to Ford, and just over two weeks after Ransburg's offer that "licenses are available to * * * [Binks'] customers" (R. II: 911)—Binks filed suit. Thus began the path of litigation that now ends here.

Summary of Argument

Ransburg, a small family concern, by experimentation and research which it commenced in 1937 to reduce its own costs, developed the first commercial electrostatic spray painting, the "No. 1 Process," which used compressed air guns to spray the paint. Later it developed a more efficient electrostatic process which did not use air to spray the paint, and was granted the patents in suit upon the method and an apparatus for the practice of the airless or "No. 2 Process." It has licensed the use of its inventions and has supplied to the licensees the specialized equipment which the licensees have needed and wanted, and which was not available elsewhere, despite Ransburg's at-

tempts to interest the large equipment manufacturers, including Binks, in producing the special items. In marketing the process, Ransburg has properly exercised its rights under patents lawfully obtained, and, as found below with complete support in testimony and documentary evidence, has not misused the patents or violated the anti-trust laws, whether its activities be viewed separately or as a whole.

I

When Ransburg began to commercialize its No. 2 Process in 1951, it was necessary for it to design and furnish to its licensees the specialized equipment needed for the practice of the process, because the principal components were not available. As the process gained acceptance, the licensees have affirmatively sought and have wanted the equipment supplied by Ransburg, and all have entered into agreements which require Ransburg to furnish the specialized equipment on a leased basis, supervise its installation, and replace defective parts.

It has always been Ransburg's policy, repeatedly expressed in bulletins to its sales personnel since 1947, that licenses under its patents to use its processes without its equipment and related items are available at appropriately reduced charges, and these terms have been quoted to prospects who were interested in them. Since 1953 prospects have been informed in writing, both at the beginning and at the end of negotiations, that non-equipment licenses are available. No one has ever requested or been denied a non-equipment license, or been required or forced in any way to take equipment or related items in order to obtain a license. Upon inquiry by Binks, Ransburg offered to license Binks' customers to use the Ransburg process with Binks' equipment.

When Ransburg in 1953 stocked non-equipment license forms and informed all of its existing licensees of the availability of such licenses, it was attempting no "purge" of any past misuse, but was increasing its efforts to be sure that all licensees would know of the available choice.

II

Nothing in Ransburg's license agreements, policy, or practice has required or forced any licensee to take or pay for a license under any unwanted or inapplicable patent in order to obtain a license to use the system desired. The scope of the license is determined by the system designed for the licensee and depicted in the drawing incorporated in the agreement, and the license is under only such patents as actually apply to the licensed system. The licensee is not required, expressly or otherwise, to recognize the validity of any inapplicable patent. No one has ever requested a license to use the method or apparatus of a particular patent or been refused such request, and Ransburg has never conditioned the granting of a license under any patent upon the taking of a license under an additional patent or patents.

III

The "Future Inventions" clause which was included in the license agreements executed during the early field experience of the No. 2 Process, when technical information was being freely exchanged among Ransburg and the licensees, provided for the grant back of a non-exclusive, royalty-free license under inventions or improvements in the field of the basic patents. This clause, which was eliminated from Ransburg's standard agreement forms in January, 1955, and cancelled from all outstanding agreements in September, 1959, was for the reasonable purpose of permitting all licensees to share improvements made in the early experience of the process, was used during a reasonable period, was of reasonable scope, and did not enlarge the monopoly of the basic patents. No license was ever obtained by Ransburg pursuant to the clause.

The only patent rights acquired by Ransburg from outside its own engineering and consulting staff were obtained solely for the lawful purpose of permitting it to market systems other than the airless system, free from

claims of infringement. Their acquisition did not eliminate competitors, did not involve the patents in suit, and did not damage Binks in its business or property.

IV

There was no fraud in procuring the patents in suit. Affidavits presented to the Patent Office to show commercial success of the invention claimed contained no misrepresentation, and the Patent Office was not misled or defrauded in any way by them.

Argument

Not challenged here is that Ransburg's No. 2 Process, and certain apparatus Ransburg conceived to work it, constitute patentable advances over prior art.[8] Challenged, instead, are three elements of Ransburg's efforts to market its process, along with minimal equipment, not otherwise available, needed to work it: I, furnishing and supervising installation of specialized equipment required for the process; II, identifying the subject matter of the license only by reference to a drawing, rather than to specified patents; and III, including, in the early days of No. 2, limited grant-back provisions in its license agreements. The basic question here becomes whether such actions, viewed as a whole (Pet. Br., pp. 19-28), or separately (*id.* at pp. 28-54), constitute misuse of Ransburg's No. 2 patents in violation of the antitrust laws.

Resolution of this basic question, in turn, must rest on the *facts* of Ransburg's market behavior. And such facts emerge in elaborate detail from the Findings of the District Court, supported by the extensive trial proceedings below, and concurred in by the Court of Appeals. In this context, to cull from this Court's language last Term,

[8] Petitioner's assertion that the patents in suit were fraudulently procured is answered under Section IV of this Argument.

"appellate review of determinations * * * must be quite restricted * * *. Where the trial has been by a judge without a jury, the judge's findings must stand unless 'clearly erroneous'. Fed. Rules Civ. Proc., 52(a)" (*Commissioner* v. *Duberstein*, 363 U. S. 278, 290-291 [1960]). "With the case in this posture," with all issues turning essentially on questions of fact, "appellants have an almost insurmountable burden" (*International Boxing Club* v. *United States*, 358 U. S. 242, 252 [1958]). For here, review "on the entire evidence" cannot leave "the reviewing court * * * with the definite and firm conviction that a mistake has been committed" (*Commissioner* v. *Duberstein, supra*, at p. 291). To the contrary, the District Court's Findings secure precise support from evidence adduced in the lengthy proceedings below as appears in the reference to the testimony and documentary evidence set forth in the Annotated Findings reproduced for the Court's convenience in the Appendix to this Brief.

I

The record amply supports the conclusion of both courts below that Ransburg has not tied equipment to patent licenses.

In all "tying" cases "the supplier of a particular commodity which the purchaser desired foisted on him a further distinct product that he did not wish to buy at all." (*Report of the Attorney General's National Committee to Study the Antitrust Laws* [1955], p. 138; see also *Northern Pacific Rwy. Co.* v. *United States*, 356 U. S. 1 [1958]; *Times-Picayune Publishing Co.* v. *United States*, 345 U. S. 594, 608-609 [1953]; *International Salt Co.* v. *United States*, 332 U. S. 392 [1947]; *Transparent-Wrap Mach. Corp.* v. *Stokes & Smith Co.*, 329 US 637, 640 [1947]). The essence of the "tie," then, is the sale or lease of one product, "but

only on the condition that the buyer also purchases a different (or tied) product, or at least agrees that he will not purchase that product from any other supplier." (*Northern Pacific Rwy. Co.* v. *United States, supra*, at p. 6). But "Of course, where the buyer is free to take either product by itself there is no tying problem even though the seller may also offer the two items as a unit at a single price" (*id.* at p. 6, n. 4).

The facts make clear "there is no tying problem" here. As the District Court found, "it has always been the express policy of • • • [Ransburg], and so understood by all of its officers and sales and management personnel, that if a prospective licensee preferred to obtain equipment elsewhere than from defendant, he was free to do so and at reduced fees could obtain a license from defendant without equipment • • •" (Fndg. 65; R. II: 1001). Carrying out this policy, Ransburg "has never at any time required that any person desiring a license under" its process patent "must obtain from it or pay for, equipment, installation supervision or part replacement service as a condition to the granting of the license" (Fndg. 66; R. II: 1002). "Nor has any licensee been in any manner coerced into taking undesired equipment, installation supervision, or part-replacement service as a condition to the grant of a license" (Fndg. 67; R. II: 1003).

These Findings are firmly rooted in the pattern of evidence here. When Ransburg was ready to commence "General marketing of the [No. 2] system • • • in 1951" (Fndg. 11; R. II: 979), "the special paint atomizers and accurately controllable paint supply systems required for [its] operation • • • were not available on the market • • •" (Fndg. 11; R. II: 979). Ransburg had already tasted disappointment in trying to interest General Electric, Westinghouse—and even Binks—to manufacture related items (see, *supra*, pp. 10-11). Since "much of the specialized equipment required for the practice of [No. 2] was and is not available on the open market" of necessity Ransburg "produced the same and furnished it to its

licensees in order to be able to market its process * * *" (Fndg. 65; R. II: 1001).

For, as one Ransburg sales official colloquially put it, "The equipment is something that our customers want and desire. They need it. * * * They don't want a piece of paper, they want the equipment to do this job in the plant. * * * The man wants to paint on a production line and you can't do that with a piece of paper, you've got to have tools" (R. I: 620).

So it was that Ransburg at all times considered supplying equipment "as more or less a necessary evil or incidental to our operation." As one of Harper Ransburg's sons, Harold by name, testified: "Our greatest expense is by far our engineering of these jobs and the sales engineering and laboratory engineering * * * far exceed the cost of the equipment. *The cost of equipment we have always considered as more or less a necessary evil or incidental to our operation*" (R. I: 480; emphasis added). Highlighting the "incidental" nature of Ransburg's equipment supply, the "assembling and testing and improving" of equipment Ransburg supplies takes place in a space roughly 25 feet by 100 feet in area—about two per cent of Ransburg's total floor space (*ibid.*). Truly, then, "equipment is a very small part of what" Ransburg supplies "to the customer" (*ibid.*).

Deeming equipment supply as simply "incidental" to marketing licenses, Ransburg has offered to "furnish the engineering background" if a licensee wanted to purchase the equipment elsewhere (R. I: 641). Thus, when Webcor contemplated changing from the No. 1 to the No. 2 Process, Ransburg offered, according to a Webcor official, "to furnish the engineering background to install the system of that type" if Webcor decided "to go out and procure the equipment on our own from whichever sources we could determine could supply it * * *" (R. I: 641).

However, "We felt it was a big enough step to make the step from the No. 1 to the No. 2 without getting involved in a lot of additional engineering, so we didn't bother any more about that part of it" (*ibid.*).

More broadly, Ransburg took great pains to make clear to all its licensees—long before Binks hove over the horizon—"that if a prospective licensee preferred to obtain equipment elsewhere than from defendant, he was free to do so and at reduced fees could obtain a license from defendant without equipment, installation supervision, or part-replacement service" (Fndg. 65; R. II: 1001). The course of Ransburg's efforts to bring this alternative home to its salesmen and licensees—actual and prospective—the District Court's Findings detail.

Thus, well before Ransburg even began to market its No. 2 Process, "this policy was expressed to all distributors and salesmen in a bulletin issued by the Ransburg partnership on August 29, 1947 * * *" (Fndg. 65, R. I: 1001). And this policy "has been reiterated by defendant in bulletins of August 18, 1950; May 27, 1953; July 15, 1953; May 13, 1954; April 4, 1955; and June 6, 1956"—all long prior to anyone's dream of the proceedings here (*ibid.*).[9]

"Although no prospect * * * had ever expressed interest in a license without equipment, in 1953" Ransburg "prepared and stocked standard printed contract forms for licenses without equipment * * *; instructed its sales per-

[9] Typical of these Bulletins is one sent "To All Distributors" on "August 18, 1950"—before general marketing of the No. 2 Process began (R. III: 283-284). There Ransburg wrote: "We have noticed that voltage supplies have been advertised which are supposedly suitable for electrostatic painting. The purpose of this bulletin is to again call your attention to our policy toward prospective users of our processes who might wish to use equipment other than ours * * * We know of no customers who have desired to furnish their own equipment for use with our processes. *However, if a prospective customer should wish to use equipment other than ours, it would not be contrary to our policy* * * *" (*ibid*; emphasis added).

sonnel to advise all prospective customers that non-equipment licenses were available; and informed its existing licensees by letter that should they desire to return defendant's equipment and retain only a license, their monthly fees would be reduced by stated amounts * * *" (Fndg. 65; R. II: 1001). And to those licensees who had not yet begun operating their equipment Ransburg typically wrote: "We wish to inquire whether you would like to convert the subject electrostatic spray licenses to licenses under which we would furnish you no equipment and under which we would assume no obligation for replacement parts, supervision or service * * *" (R. III: 157-58, 286). "If you elect to assume responsibility for these items for yourself and return our equipment, your basic minimum monthly fee of $100 for each unit would be reduced to $80 * * *, and your initial fee * * * reduced from $2600 to $800 * * *" (*ibid.*).

Beyond reminding *present* licensees they were free to secure equipment elsewhere, Ransburg instructed its representatives to "*advise all of your prospective customers* that they may obtain a license without our equipment" for reduced initial and monthly fees (Bulletins of May 13, 1954 reiterating Bulletins of May 27, 1953 and July 15, 1953, R. II: 816; R. III: 284-86, 313; emphasis added). "Since 1953 defendant's sales brochures describing the No. 2 Process have stated that defendant will supply the equipment '*when desired*' * * *. When proposed agreements providing for equipment are transmitted to the prospect, the letter points out that the agreement so provides, and states that defendant understands that the prospect prefers this contract to one under which the equipment is not furnished. Defendant thus takes steps to inform its prospects in writing of the availability of process licenses without equipment upon the initial contract (*sic*), and again when transmitting the proposed agreement for execution" (Fndg. 65; R. II: 1001-2; emphasis added).

The alternative Ransburg offers is a realistic one.[10] This was assured by calling upon the nationally known accounting firm of Ernst & Ernst. The initial fee where equipment is furnished is approximately two-and-one-half times the cost of the equipment, which cost includes burden and profit, as determined by the Ernst & Ernst cost study (Howarth Dep., R. I: 579-80). If the equipment is not desired by the customer, the initial fee is reduced by sixty per cent (R. II: 816)—*thus eliminating from the initial fee a sum equal to one hundred fifty per cent of the equipment cost and profit thereon.* Monthly fees are likewise reduced (*ibid.*). These reduced alternative fees are quoted to interested customers (Fndg. 70; R. II: 1004; R. II: 823). Binks offered no evidence even tending to question the propriety of these differentials. It was in this light that the District Court found that "Any terms quoted to any prospect for a non-equipment license made *due and proper allowance* for elimination of the equipment and related services not to be furnished thereunder" (Fndg. 70; R. II: 1004; emphasis added).

To sum up, absent here is the essential of any "tie"—the conditioning of the sale or lease of one product, Ransburg's process patent license, on the taking of another, Ransburg's equipment. Ransburg's licensees took certain equipment from Ransburg because, in the early days of No. 2, despite Ransburg's efforts, no one else made items

[10] The contention in Petitioner's Brief (pp. 38-42) that Ransburg's non-equipment license form would of necessity force an unwanted license under the apparatus patent and the use of Ransburg equipment is groundless. A drawing would be incorporated in the license only for the purpose of defining the scope of the license, and it would illustrate only whatever apparatus was actually desired by the licensee. Under the express terms of the non-equipment form the licensee would automatically receive a license under the apparatus patent if—but only if—the desired apparatus was covered by that patent. In any event, he would be free to make or to obtain the apparatus of his preference from whatever source he desired. This is confirmed by Ransburg's expressed willingness to license the use of *Binks'* equipment by Binks' customers (R. II: 911).

needed for it to work safely and most efficiently.[11] Ransburg viewed its equipment supply task as no more than "a necessary evil", "incidental to our operation", (R. I: 480). Its "intent was to make nothing that was readily available" (R. III: 174). From the licensee's own point of view, it is apparent why each has obtained the specialized equipment from Ransburg. Not a single licensee has testified that he was forced to take Ransburg equipment against his wishes. To the contrary, as appears from the testimony of those whose depositions were taken by Binks, *they sought out and wanted Ransburg's equipment.*[12] They never asked for a non-equipment license.[13] In the words of Binks' president himself (R. III: 247), "I would say that usually people would like to get equipment from somebody they think has the know-how. So naturally a lot of people, if Ransburg is in that business, they should know what equipment to offer, the best type to offer, and most customers would reach that conclusion, so they might feel they would be better off getting it from Ransburg than they would from somebody else. * * *" And that is just what the licensees did.

---

[11] Indeed, under such circumstances, even had Ransburg "tied" process licenses to the taking of its equipment, prerequisites for illegality might well not be met. See *United States* v. *Jerrold Electronics Corp.*, 187 F. Supp. 545 [E. D. Pa. 1960], *aff'd* per curiam March 20, 1961, 29 L. W. 3275. For a more extended discussion of the propriety of tie-ins when the success of the system depends upon equipment unavailable from other purveyors, see generally *The Use of Tie-Ins in New Industries*, 70 Y. L. J. 804.

[12] Houlberg: "We were primarily interested in finding some *equipment* at the time that would fit our needs" (R. III, 270); "our *main objective* in going to Ransburg at the time *was to investigate the equipment* that they had available and which we had inquired about" (R. I: 633).

Rothe: *"We were interested in a proposal on their equipment"* (R. I: 636). "I wasn't interested in obtaining it in any other manner than in a package unit" (R. III: 277).

Wallin: See R. I: 64[illegible]

[13] Houlberg (R. I: 633); Rothe (R. I: 636); Wallin (R. I: 641).

Strong evidence that licensees wanted Ransburg equipment is the fact that, subsequent to the receipt of the 1953 letters affirmatively notifying them of the availability of non-equipment licenses, fifty-five of its existing licensees executed a total of ninety-seven new agreements for additional licenses and in every case, with full knowledge of the alternative, "chose an agreement requiring Ransburg to furnish the equipment" (Fndg. 67; R. II: 1003; Witness E. Ransburg, R. III: 159-60).

This history belies the unwarranted assumption upon which Point I in the Memorandum Amicus Curiae of the United States is bottomed (p. 3). The Government "assumes" as a proven fact that Ransburg had, up to 1953, misused its patents and on this assumption contends that an incomplete "purge" was attempted. Not only is the Government's assumption unsupported by the record, but it is directly contrary to the District Court's Findings 63, 65, 66, 67, 70, 71, 82 and 89 (R. II: 1001-04, 1011, 1013), which are supported by ample testimony and documentary evidence. There was no occasion for a "purge," and none was attempted.

Much the same goes for Binks' argument (Br. 33-36) that Ransburg "requires" its licensees to pay for replacement parts and service. The only "service" which Ransburg undertakes to supply when its equipment is furnished is the supervision of its initial installation in the customer's plant, and replacement free of charge of only those parts which become defective without the fault of the licensee. The license agreement makes clear that "User shall furnish all other labor, materials, and equipment necessary for the use of the Process" (R. III: 37-38).

Although it had no contractual obligation to do so, in order to get its new process off the ground and keep its customers satisfied, Ransburg has sent its engineering personnel to customers' plants to assist them with technical problems—but this was not repair or maintenance of the equipment (R. I: 47). The minimal nature of Rans-

burg's servicing endeavors is underscored by the fact that "*the installation and servicing*" of all Ransburg systems is carried on by "*eighteen*" men (R. I: 607; emphasis added).

As the District Court found with ample evidentiary support, licensees have no more been "required" to take services or replacement of defective parts any more than to take equipment initially (Fndg. 66; R. II: 1002).

II

Ransburg never required any prospective licensee, as a condition to receiving a license under one patent, to take or pay for a license under any other patent.

The law is clear that "mandatory package licensing" consists of "the exercise of the power created by a particular patent monopoly to condition the licensing of that patent upon the acceptance of another patent • • •. Whatever may be the asserted reason or justification of the patent owner, if he compels a licensee to accept a package of patents or none at all, he employs one patent as a lever to compel the acceptance of a license under another. Equity will not countenance such a result" (*American Securit Co.* v. *Shatterproof Glass Corp.*, 268 F. 2d 769, 777 [C. A. 3, 1959], *cert. den.*, 361 U. S. 902 [1959]).

But here the record is barren of evidence that Ransburg ever "compel[led] a licensee to accept a package of patents or none at all" or ever used "one patent as a lever to compel the acceptance of a license under another." Just to the contrary, as the District Court found, "*The defendant has never required any prospective licensee, as a condition to receiving a license under any patent, to take or pay for any license under any patent which did not apply to the system described in the license agreement.* No prospective licensee has ever requested a license under any of defend-

ant's patents which defendant has refused to grant such license unless such prospective licensee also takes or pays for a license under one or more other patents. *No licensee of defendant has at any time received or paid for a license under any patent which did not apply to the system described in the license agreement*" (Fndg. 71; R. II: 1004; emphasis added).

This Finding tracks closely evidence adduced. The electrostatic spray coating needs of Ransburg's prospective customers vary substantially, depending upon the nature and size of the article to be coated, the coating material, the type of finish, and other production considerations. A system is designed by Ransburg for each customer and described in a schematic drawing (Fndg. 61; R. II: 998-99). The standard customer agreement permits the use of the system so designed and does not list the patents which are applicable to that particular system. This assures each customer of a license under such, and only such, Ransburg patents as are actually applicable to that particular system. No license under any inapplicable patent is granted expressly or by implication (R. I: 137-45).

Petitioner's Brief (p. 42) asserts that Respondent has "*never* licensed or offered to license under a single patent alone," citing the testimony of Harold Ransburg (R. I: 482). This fact would be significant only if at some time there had been a request or a desire expressed by someone for such a license, and a refusal by Ransburg to grant it. With access to all of Ransburg's licensees and prospective licensees during discovery proceedings, Binks tendered no evidence whatever of any such request or refusal, and Harold Ransburg testified affirmatively that no such request had ever been made to his knowledge (R. III: 194-95). The trial court so found (Fndg. 71; R. II: 1004).

The argument that a license which does not identify the patents "would force the licensee to recognize the validity of and pay for any and all patents of a large group which

the licensor at any time might own" (Pet. Br., p. 43) is a *non-sequitur*. There being no express recognition of patent validity in Ransburg's agreements, such "recognition" can result only from the legal principle that one who accepts a license under a patent is estopped from contesting the validity of the patent while the license is in effect. The breadth of the license is not determined by the estoppel, but on the contrary, the breadth of the estoppel is governed by the breadth of the license as defined in the agreement. It applies only to those patents under which the licensee actually has a license. *Walker on Patents, Deller's Ed.*, Sec. 383 (1937). Under Ransburg's agreements the user has a license only under the patents which are applicable to his system, and under no principle would he be estopped from contesting the validity of any other patents owned at the time by Ransburg.

Most Ransburg licensees, satisfied from the express terms of the license-grant that no Ransburg patent could prevent their use of the equipment they desired, were not interested in knowing what patents Ransburg owned. However, for seven licensees lists of Ransburg's patents were supplied (R. I: 50, 178-81). Only the Durham contract and the Avco contract of February 2, 1954, related to the No. 2 Process (R. I: 154, 159)—and of the seven, only the Avco agreement was offered in evidence by Binks.

That Avco contract, in accordance with Ransburg's understanding of Avco's desires, listed all Ransburg patents and, by typewritten modification of the regular printed form (R. II: 886), characterized the listed patents and applications as "pertaining to and covering methods and apparatus used in electrostatically depositing liquid spray particles formed by airless atomization * * *" The just-quoted language came from the printed form (R. III: 18), and its use to describe the listed patents and applications was an inadvertent error, which was corrected as soon as it came to attention (R. II: 965).

Petitioner's attempt (Pet. Br., pp. 44-46) to parlay these isolated instances in which patents were "listed or referred to" (R. I: 50) into a "program" of illegal package licensing collapses when it is borne in mind that Ransburg at no time represented, or intended to represent, that all the listed patents were indeed applicable to the particular painting operation licensed (R. I: 472-73). Supporting this version of events, neither Avco—nor any one else—ever suggested they were forced, urged, or even asked to take or pay for any license not covering the particular painting operation desired. It was in this light that the Court of Appeals concluded "No licensee pays for or receives any license under a patent not applicable to the system" for which he contracts (R. IV: 848).

No "mandatory" package licensing has occurred.

III

Ransburg's inclusion of a limited grant-back provision in certain license agreements, during the early field experience of No. 2, was reasonable and lawful.

True, "Congress * * * has made no specific prohibition against conditioning a patent license on the assignment by the licensee of improvement patents" (*Transparent-Wrap Machine Corp.* v. *Stokes & Smith Co.*, 329 U. S. 637, 647-648 [1947]). Equally true, however, "that does not mean that the [grant-back] practice * * * has immunity under the antitrust laws" (*ibid.*). To the contrary, grant-backs must pass antitrust muster, where legality turns on their purpose and competitive effect. (Compare *Transparent-Wrap Machine Corp.* v. *Stokes & Smith Co.*, *supra*, with *Hartford Empire Co.* v. *United States*, 323 U. S. 386 [1945] and *United States* v. *General Electric Co.*, 80 F. Supp. 989, 1006 [S. D. N. Y., 1948]).

Here, as the District Court found, "So that defendant, and all of its licensees might share in the use of any

improvements developed by licensees who had the advantage of the use of the No. 2 Process in its early field experience, the forms employed from April, 1951, to January, 1955 * * * included a requirement in substance that the licensee grant back to defendant a royalty-free, non-assignable, non-exclusive license, with right to sublicense, under any patents, inventions, or improvements acquired by licensee during the term of the agreement, and within two years thereafter, relating" to the No. 2 Process (Fndg. 84; R. II: 1011-1012). Though some of these old license agreements were still in effect at the time of the trial,[14] the "grant-back clause has not been included in defendant's forms since January, 1955." (*ibid.*). "Defendant has never acquired any patent or patent right pursuant to" this clause (*id.*).[15]

[14] For the first time in these proceedings Binks states in its Brief (pp. 17, 48, 54) that some of these clauses are "still in force and effect." The fact is that none is any longer in effect, all having been cancelled by letters to licensees in September 1959, following the declining by Ransburg of the only license ever tendered by a user pursuant to this clause.

[15] In fact, no patent relating to the No. 2 Process was ever acquired from any source other than the Ransburgs and their engineering and consulting personnel, and all No. 2 inventions but one sprang from Ransburg's own laboratories in Indianapolis. The lone exception was a development by a research consultant hired to do work on No. 2 in Chicago (Fndg. 77; R. II: 1009).

Petitioner's Brief (pp. 2, 5, 7-9, 15 and 21-23) attempts to make much of four acquisitions in the 1940's of certain adversely held patent rights. None of the rights so acquired related to *airless* electrostatic painting—the sole process at issue here—and Petitioner's allegations were fully explored and rejected by the Courts below. When it began to enter the electrostatic painting field, Ransburg found that certain adversely owned patent rights were threats to the marketing and use of the systems which it had developed. To remove these roadblocks and to protect Ransburg and its licensees (some of whom it had agreed to indemnify) against patent infringement claims, Ransburg in two instances purchased and in two instances procured licenses under the adversely held patent rights. None of the other parties with whom Ransburg dealt was a competitor of Ransburg or a marketer of painting systems and no market was divided. The District Court's Findings 72-76 (R. II: 1005-09) document Ransburg's

First of all, then, this grant-back provision and its effect were sharply limited. It was employed only in licenses issued during the first four years of No. 2's commercial life. Further, any license granted back would be (a) non-exclusive; (b) applicable only to subject matter in the field of the basic patents; and (c) limited to use of that subject matter in such field.

Beyond the curtailed nature of this grant-back, just what was its purpose? As one of the Ransburgs explained, "We included it because we wanted some field experience during the final development stages and those who gained the initial advantage of it, we felt should give us their future inventions that came about" through use of the process (R. I: 536). The grant-back's purpose, then, to cull again from the District Court's findings, was simply "that defendant, and all of its licensees might share the use of any improvements developed by licensees who had the advantage of the use of the No. 2 Process in its early field experience" (Fndg. 84; R. II: 1011).

---

lawful purpose in acquiring these adversely held rights and refute the Petitioner's contention (p. 21) that Ransburg was motivated by "monopolization and restraint of trade", and these findings are firmly supported by the Record (R. I: 423, 440, 448, 459; R. III: 154, 163-64, 195, 199-201). Thus, the District Court concluded that none of the acquisition agreements "was entered into by defendant * * * with the purpose or intent of restricting entry of competitors into the field of electrostatic spray coating equipment, or of coercing the trade into dealing with defendant, and there is no evidence that any of them had such effect" (Fndg. 78; R. II: 1009-10).

Neither was Binks "injured in [its] business or property" (15 U. S. C. Sec. 15) by these transactions, since it never sought a license under the patents involved (Fndg. 79; R. II: 1010), has recognized that "there was nothing stopping" Binks from marketing air-type equipment from the time it first gave consideration thereto (Rice, R. III: 261. See also Roche, R. III: 243, and Baur, R. III: 253), but it "chose not to do so until 1958" (Fndg. 81; R. II: 1011; Pet. Ans. to Ints. 27, 28; R. III: 45-48).

From this purpose of sharing all advances with beginning licensees, no anti-competitive consequence followed.[16] Initially, "Defendant has never acquired any patent or patent rights pursuant to" the grant-back (Fndg. 84; R. II: 1012). And, as the District Court found, the grant-back "clause has not stifled or discouraged research or invention by licensees" (*ibid.*).[17]

Ransburg's grant-back provisions, while they were in use and effect, were reasonable and lawful.

---

[16] As the *Report of the Attorney General's National Committee to Study the Antitrust Laws* [1955], p. 229, concludes, the grant-back of exclusive licenses should be "subject to close scrutiny", but "On the other hand, grant back of a nonexclusive license, especially with authority to sublicense, may diffuse the benefits to all licensees and thus tend to encourage competitive use of the innovations". In fact, expressly allowed in *United States* v. *General Electric Co.*, 115 F. Supp. 835, 848 (D. N. J. 1953) was a provision enabling General Electric to require nonexclusive grant backs in licensing "future patents."

[17] Petitioner's reliance upon (p. 51) a 1953 interoffice memorandum to Harold Ransburg (R. II: 743-44) is wholly misplaced. From the letter itself it is clear that the statement "getting any further work done on the equipment" was not related to the effect of the grant back clause, for the "further work" was work General Electric desired Ransburg to perform. And, even this conclusion was unwarranted, for there is ample evidence that Ransburg, because of the differing needs of its customers, of necessity was continually modifying and improving its basic system (R. III: 173).

The position taken by both Petitioner (Br. p. 48) and the Government (Memorandum, pp. 8-9), that the grant-back clause "inevitably resulted in discouragement of experimentation by any but" the licensor is borne out by no evidence whatever, although the issue was before the Court for trial and Petitioner had ample opportunity to present such evidence if it had existed. Moreover, this is in direct conflict with the express finding of the District Court that the "clause has not stifled or discouraged research or invention by licensees" (Fndg. 84; R. II: 1012), which is supported by the uncontradicted testimony of Harold Ransburg that licensees did have incentive to make improvements (R. I: 487). The Court of Appeals correctly concurred, observing that the asserted stifling effect of the clause "is purely conjectural" (R. IV: 849).

IV

There was no fraud in the procurement of the patents in suit.

With no justification in the Record or otherwise, Binks charges that Ransburg "procured the issuance" of the patents in suit "by false representations in affidavits filed in the Patent Office to the effect that it had *actually commercialized* the stationary type systems of the then pending parent method patent application" (Pet. Br., 54) when it "knew it had never commercialized any of the *structures illustrated* in the Starkey patents * * *" (*Id.*, at 55, emphasis added).

The Isgrigg and Howarth affidavits, to which Binks refers, were filed with the Patent Office on March 20, 1953, as evidence of the commercial success of the invention as embodied in the Ransburg No. 2 commercial systems (R. IV: 637-42). In neither affidavit is it stated or represented that the No. 2 systems employ stationary heads. But more important, the details of the heads in the systems referred to in these affidavits were entirely immaterial—what *was* important was the fact that the systems described fell squarely within the scope of the application claims as then being prosecuted and as they ultimately issued. What counts are the *claims* of the application—not drawings that merely illustrate specific embodiments of the invention. As this Court has consistently held over a half century, the Court of Appeals correctly stated that "the claims not the drawings define the invention" (R. IV: 843). See *e.g.*, *Continental Paper Bag Co.* v. *Eastern Paper Bag Co.*, 210 U. S. 405, 419 (1908); *Smith* v. *Snow*, 294 U. S. 1, 11 (1934); *Universal Oil Co.* v. *Globe Co.*, 322 U. S. 471, 484 (1943).

There can be no question but that, as the District Court found, the rotating heads which Ransburg commercialized "embody the fundamental concepts to which the claims

• • • are directed, and the commercial success the systems have enjoyed is to be credited basically to the inventions those claims describe" (Fndg. 42; R. II: 991). As the Court of Appeals put it, "the revolving bell or rotating disc feeding the paint to the atomizing zone by centrifugal force is fully embraced within the general concepts of the invention and constitutes a mere improvement in the mechanics of presenting the liquid to the zone of atomization" (R. IV: 843).

Not only were the affidavits free from misrepresentation, but the Patent Office was neither misled nor uninformed as to the rotary nature of Ransburg's No. 2 heads. Ransburg had widely distributed its brochure which is Exhibit IIII in this case (R. III: 455-59), entitled "Ransburg No. 2 Electrostatic Process" (R. I: 423-24). In addition to illustrating the rotary heads in a drawing and in photographs, this brochure stated on page 2 that "*rotation of the head*" causes the paint "to flow evenly to the outer edge" (R. III: 458, emphasis added). A copy of this brochure was furnished to the Patent Office on September 19, 1951, a year and a half before the Isgrigg and Howarth affidavits were filed, and the brochure has been cited frequently by the Patent Office as a reference in a number of issued patents.[18]

[18] Referred to in U. S. Patent No. 2,839,425, the last page of which is reproduced in the Appendix to Respondent's Brief (p. 53), as follows: "No. 2 Electrostatic Process, Ransburg Electro-Coating Corp. 12 pages rec'd in U. S. Patent Office Sept. 19, 1951." See also, U. S. Patent Nos. 2,764,125; 2,781,279; 2,794,751; 2,808,343; and 2,955,565.

Conclusion

Viewed as a whole, the Record here tells a detailed story of the invention and early marketing of a significant technical advance by a small Indiana concern. Involved here is not one of "a host of gadgets under the armour of patents—gadgets that obviously have no place in the constitutional scheme of advancing scientific knowledge * * *" (*A. & P. Tea Co.* v. *Supermarket Corp.*, 340 U. S. 147, 156 [1950]). Instead, developed by the Ransburgs from the idea "born" that day when Starkey's paint brush became involved in an electrostatic field has been an airless electrostatic paint process that cuts "paint losses" from their prior level of "about one-third of the paint sprayed" (Fndg. 19; R. II: 983) down to "1% or 2% of the paint sprayed * * *" (Fndg. 20; R. II: 984).

Despite this significant advance, Ransburg faced real difficulties getting its new process off the ground. Key equipment was not available, so Ransburg was forced to develop and supply it. Minimizing initial capital outlay by its customers while still maintaining a fair and reasonable relation between its return and the value of the process to the customers, Ransburg leased equipment and offered monthly charges for both the equipment and process proportioned to savings in paint costs. And, again in the early experimental days, to assure all beginning licensees the benefits of new advances by any one licensee, limited provision for non-exclusive grant-back was tried. Even in 1957, with the No. 2 Process on the market for almost six years, and being used by such large industrial concerns as American Motors, General Electric, Westinghouse, IBM, and DuPont (R. I: 158; R. III: 130), industrial painting carried on via No. 2 still amounted to but 1% of the national total (Fndg. 83; R. II: 1011).

Through the patent laws, Congress "gives the patentee * * * the 'exclusive right to make, use, and vend the inven-

tion or discovery' for a limited period * * *. That is to say, it carries for the statutory period 'a right to be free from competition in the practice of the invention' Mercoid Corporation v. Mid-Continent Co. * * *" *Transparent-Wrap Mach. Corp.* v. *Stokes & Smith Co.*, 329 U. S. 637, 643 [1947]). Without this protection, the appropriation by industry of the No. 2 Process would be certain, without the reward to Ransburg contemplated by the patent laws.

Ransburg has employed its patents to promote the use of the inventions in the manner intended by Congress. It has licensed industry to use the inventions in consideration of charges geared to the value of the use and representing a portion of the savings realized by the user in the cost of paint sprayed. Industry could adopt the process only if it reduced production costs, and then only if the specialized equipment necessary for production-line painting could be obtained. There being no other source, Ransburg designed and furnished it, but never undertook to supply items which were not part of the specialized equipment itself and which were readily available from Binks and others.

Understandably Ransburg's licensees have sought and wanted the equipment which was developed through the research and experience of the only company in the field, and behind which it would stand. Consequently, all have entered into agreements requiring Ransburg to furnish it. Nevertheless, Ransburg has always stood ready to license the use of its inventions separate and apart from the furnishing of any other item, and to do so at appropriately reduced charges, and has quoted terms to any customer interested in that type of license.

As was found by the courts below, Ransburg has never attempted to exclude other manufacturers from the equipment field—it has stood and now stands ready to issue non-discriminatory licenses to use the inventions of its patents, leaving the licensee free to obtain all equipment and services from Binks or any other supplier. When Binks decided that it should add airless electrostatic spray-

painting equipment to its line of "Everything for Spray Painting" and asked Ransburg for a license to make and sell such equipment under the Ransburg patents, Ransburg declined a license on Binks' nominal royalty terms, but specifically told Binks that licenses were available from Ransburg to Binks' customers to use the process, which would have enabled Binks to sell them equipment for use of the process without a separate license to make and vend. As Binks' own president admitted, it was the issuance of this patent which was the "damper" to Binks' marketing airless systems rather than Ransburg's marketing practice, and this obstacle Ransburg offered to remove by licensing Binks' customers (R. I: 684; R. II: 911; R. III: 239).

At no time has Ransburg attempted to enlarge its rights under any patent by requiring the licensee to take or pay for anything else in order to obtain the license.

The judgment of the Court of Appeals should be affirmed.

Respectfully submitted,

ELBERT R. GILLIOM,
1344 Consolidated Building,
Indianapolis 4, Indiana,

JAMES P. HUME,
38 South Dearborn Street,
Chicago 3, Illinois,

HARRY T. ICE,
Tenth Floor, 111 Monument Circle,
Indianapolis 4, Indiana,

VERNE A. TRASK,
801 Hume-Mansur Building,
Indianapolis 4, Indiana,

Attorneys for Respondent.

FILE COPY

Office Supreme Court, U.S.
FILED
APR
JAMES R.

IN THE

Supreme Court of the United States

October Term, 1960

No. 501

BINKS MANUFACTURING COMPANY,

Petitioner,

vs.

RANSBURG ELECTRO-COATING CORP.,

Respondent.

On Writ of Certiorari to the United States Court of Appeals for the Seventh Circuit

APPENDIX TO BRIEF FOR RESPONDENT RANSBURG ELECTRO-COATING CORP.

ELBERT R. GILLIOM,
1344 Consolidated Building,
Indianapolis 4, Indiana,

JAMES P. HUME,
38 South Dearborn Street,
Chicago 3, Illinois,

HARRY T. ICE,
Tenth Floor, 111 Monument Circle,
Indianapolis 4, Indiana,

VERNE A. TRASK,
801 Hume-Mansur Building,
Indianapolis 4, Indiana,

Attorneys for Respondent.

807 BAR PRESS INC., 54 LAFAYETTE ST., NEW YORK 13 — WA. 5-3432

APPENDIX TO BRIEF FOR RESPONDENT

FINDINGS OF FACT AND CONCLUSIONS OF LAW WITH SUPPORTING REFERENCES TO TRANSCRIPT OF RECORD

All footnotes to the Findings contain references to the location of the supporting material in the Transcript of Record filed herein, and delete all references not reprinted.

The statements of fact appearing in the introduction to the Court's findings are all supported by the findings themselves. References to the transcript are therefore omitted from the introductory statement.

The following references are used in the footnotes to the findings:

Transcript of Record	"R. "
Official Reporters' Transcript	"Tr. "
Plaintiff's Exhibit	"Px. "
Defendant's Exhibit	"Dx. "

The witnesses and deponents are identified by last name only, with the exception of Harold and Edwin Ransburg.

UNITED STATES DISTRICT COURT
*** * (Caption IP 56-C-262) * ***

FINDINGS OF FACT
AND
CONCLUSIONS OF LAW

For a number of years prior to the incorporation of defendant on January 1, 1948, its predecessors were engaged in the manufacture and sale of housewares items. In the year 1937, they commenced experiments in using a high voltage electrostatic field to more efficiently deposit paint coating materials on its manufactured products. Up to this time, they used the conventional process of compressed-air guns without an electrostatic field. These experiments resulted in the development of what they called their No. 1 Process for which United States Patent Number 2,247,963 was issued. The validity and infringement of this patent is not in issue. The No. 1 Process called for the spraying of coating material by means of compressed-air spray guns into an electrostatic field which was maintained between wires or electrodes and through which field the grounded conveyorized articles of manufacture passed, so that the atomized paint forced into the field by compressed-air became electrically charged and was urged toward deposition upon the articles by the effect of the field. The No. 1 Process, as compared with the prior conventional process of spraying paint coating, substantially reduced over-spray, paint loss and labor expense, and it was a substantial improvement in many commercial applications. This process was marketed in the year 1944 and was the first commercially used electro-

static spray painting system. The conventional equipment items such as conveyors, ovens and spray guns were not supplied by defendant or its predecessors but were purchased by their licensees from the plaintiff and other suppliers.

The defendant's predecessors continued their research and development work which resulted in the development of what they called their No. 2 Process and an application for patent was filed on September 29, 1944 for which United States Patent Number 2,685,536 was issued on August 3, 1954. The No. 2 Process made it possible for articles to be coated electrostatically without the necessity of compressed-air spray guns to atomize the coating material. In this process, in substance, the electrostatic field is maintained directly between the atomizing device, or head, and the articles on the conveyor. The liquid coating material is fed at a controlled rate to and distributed along the extended edge of a stationary or rotating atomizing head. The strength of the field at the edge is such that the field is capable of electrostatically atomizing fine, electrically-charged particles from the liquid. The field then disperses those particles in the form of a spray, and deposits them upon grounded articles of manufacture situated on a conveyor moving through and a part of the field. The No. 2 Process, as compared with the No. 1 Process and prior conventional processes of spraying paint coating, in many commercial applications, virtually eliminated over-spray, paint loss, further reduced labor costs, substantially reduced the manufacturer user's investment in spray booths, exhaust systems and related equipment.

While the application for the patent was pending the defendant was incorporated, became the owner thereof, and since has been engaged in the business of marketing systems employing electrostatic forces in the automatic

application of paint or other liquid coating to articles of manufacture carried by conveyors. The first license of the No. 2 Process was granted by defendant in the year 1949, under a special consulting and research agreement with Enameled Steel and Sign Company of Chicago, Illinois. General marketing of the system was commenced in the year 1951. Thereafter the patent on the No. 2 Process issued on August 3, 1954, as United States Letters Patent Number 2,685,536. Inasmuch as the special paint atomizers and accurately controllable paint supply systems required for operation of the No. 2 Process were not available on the market, defendant designed and produced them and furnished them to licensees as part of the specialized equipment.

The plaintiff has been in business since the year 1892, has branch offices or warehouses in twenty-eight (28) major cities in the United States and Canada. It has and is manufacturing and selling spraying equipment for paint and other materials in the Southern District of Indiana. It sells a line of merchandise under the slogan "Everything for Spray Painting," and is one of the two largest merchandisers of spray painting equipment in the United States. It sells, and for many years has sold, a large volume of compressed-air spray guns, for both manual and automatic operation, and in many instances sells complete finishing facilities as a package, including spray guns, spray booths, paint-collecting devices, exhaust systems, and related equipment. In the year 1958, four years after the issuance of defendant's No. 2 Process patent, the plaintiff added its advertised line of products electrostatic spray painting equipment of the compresed-air type as depicted by defendant's No. 1 Process.

The plaintiff's first knowledge of a method for painting by the use of compressed-air and an electrostatic field was

attained in the late 1930's or early 1940's from the No. 1 Process of the defendant's predecessors. In December of 1942, at the invitation of the defendant's predecessors, several of plaintiff's representatives attended a demonstration of the No. 1 Process at Indianapolis, Indiana. Plaintiff's first knowledge of an airless electrostatic painting process was obtained from defendant's No. 2 Process, after it was commercialized. In January of 1951, after discussions of the subject of electrostatic spray painting, the plaintiff purchased a power pack and carried out experiments in that year in keeping with its knowledge of the market development. Plaintiff then engaged in a broad base research to investigate and develop methods of painting other than those being practiced with its products. Its research was sporadic until April 1, 1952, when it hired for that purpose James H. Rice, who began by reviewing all of the patents in the field. In the year 1952, plaintiff negotiated with the co-patentee of the patents in suit and another former research employee of defendant, with the intent to employ them, but no agreement was reached. During the years 1951 and 1952, plaintiff gave consideration to acquiring the business of a third party which was in business of marketing air-type electrostatic spray coating systems in competition with defendant's No. 1 and 2 Processes, but these negotiations terminated. In the year 1953, plaintiff engaged an independent research organization to improve equipment for the application of paint as a coating which was performed in the years 1953 and 1954. The research culminated in the development of an atomizing head, or emitter, called SK661, a drawing of which was made and dated May 12, 1954. The emitter is intended for use in an airless electrostatic coating system which is the subject of the charge of infringement by defendant's counterclaims. After plaintiff learned of the issuance of defendant's No. 2 Process on August 3, 1954, its research

ceased. The plaintiff attempted to market for electrostatic spray painting its SK661 emitter and the equipment related thereto to the Ford Motor Company on January 25, 1956. In response to Ford's request plaintiff unsuccessfully quoted its price with this express provision:

> "This bid shall not be binding upon Binks Manufacturing Company as an offer unless and until Ford Motor Company shall indemnify Binks Manufacturing Company and hold it free and harmless against any and all suits or cause of action which may be brought against Binks Manufacturing Company for infringement and/or contributory infringement of Starkey et al patent 2,685,536 by reason of manufacturing and furnishing Ford Motor Company the devices comprising the subject matter of said bid or by use by Ford Motor Company of said devices."

Thereafter in an exchange of correspondence consisting of eight letters commencing on July 3, 1956, and ending on September 21, 1956, the plaintiff stated it was ready to market a paint sprayer which electrostatically atomized paint without making use of compressed-air spray gun and requested defendant send its standard license form. When defendant sent its No. 2 Process license form without equipment and the alternate license form with equipment, plaintiff sent defendant a print of its SK661 drawing of May 12, 1954, stating that neither form of license was satisfactory, that it was interested in a "license to make and sell equipment for this type of spray painting" under the defendant's No. 2 Process patent; that the license without equipment form was not acceptable because it required continuous periodic payments of royalties based on the extent of the coating material used and that plaintiff's sales practice was such that any license agreements would have to

require the payment of only one royalty payment at the time of each sale so that thereafter plaintiff's customer's use of the equipment would be free of any further royalty payments, and requested defendant consider granting such a license based at a given rate of percentage of the sales price. The defendant responded:

> "• • • Granting licenses on this basis would require a complete change in our marketing policy and a change of all of our licenses now in effect, as otherwise a large part of our licensees would be treated unfairly. We also believe that the system you suggest is not satisfactory for determining the proper value for the use of the process.
>
> "In view of the foregoing we trust you can readily understand why we feel that we cannot comply with your request. We want you to know that licenses are available to your customers for painting with our method and we assume you will not furnish the equipment which has been the subject of this corespondence to such customers unless they are licensed by us."

Twenty (20) days after this exchange of correspondence, the plaintiff commenced its action by the filing of its complaint.

The plaintiff's complaint and amendment thereof sought a declaratory judgment that the defendant's No. 2 Process patent issued August 3, 1954 as United States Letters Patent 2,685,536 entitled "Method for Electrostatically Coating Articles," was invalid, and alleged misuse, violations of the anti-trust law and unfair competition by defendant. Upon the filing of defendant's counterclaim, the plaintiff filed its cross-counterclaim and voluntarily dismissed its amended complaint since the question of justiciable controversy had been rendered moot by the defendant's counter-

claim which was in the form of a conventional patent infringement action. Thereafter, and while the action was pending, on June 4, 1957, United States Letters Patent 2,794,417 issued to the defendant, and was entitled "Apparatus for Electrostatically Coating Articles." The apparatus patent applied for on June 4, 1954 upon which the apparatus patent 2,794,417 issued, was a division of the application of September 29, 1944, on which the method patent 2,685,536 issued. The apparatus patent was then also made a subject of the litigation by the defendant's filing of its supplemental counterclaim and plaintiff's filing of its supplemental cross-counterclaim.

The pleadings having been consolidated by substitution the case was tried upon the issues presented by:

Defendant's substituted counterclaim, seeking injunction and damages on account of alleged infringement by plaintiff of defendant's United States Patent 2,685,536 and plaintiff's substituted answer of three defenses, denial of infringement, invalidity of the method patent and misuse of the patent;

Defendant's substituted supplemental counterclaim seeking injunction and damages on account of alleged infringement by plaintiff of defendant's United States Patent 2,794,417 and plaintiff's substituted answer of five defenses, denial of infringement of the apparatus patent, invalidity of the apparatus patent, two defenses of estoppel to assert the apparatus patent, misuse of the apparatus patent; and

Plaintiff's substituted cross-counterclaim, seeking an injunction, three-fold damages and an accounting for alleged violation of the anti-trust laws and unfair competition by defendant and defendant's substituted answer of two defenses, denying the alleged violation of the anti-trust laws and unfair competition and pleading the two-year

statute of limitations with respect to plaintiff's claim for three-fold damages under Section 15, Title 15, U.S.C.

Patent 2,685,536 in suit is directed to methods of electrostatically spray-painting without the use of compressed-air. It contains eleven claims, all of which, with the exception of claims seven and nine, are asserted by defendant to have been infringed by plaintiff. Claims one, two and ten have been treated as typical.

Patent 2,794,417 in suit is directed to forms of apparatus for use in practicing the method of the other patent 2,685,536. It contains four claims, but only claim four is relied upon by defendant as having been infringed by plaintiff.

Typical of this class of cases; the issues are multiple and the evidence and briefs are voluminous.

The evidence of both parties consisted of exhibits, records, written evidence, admissions, stipulations, interrogatories and depositions. The plaintiff offered no testimony of witnesses in the presence of the Court at the trial. The defendant in addition offered testimony of witnesses in the presence of the Court at the trial who were vigorously cross-examined.

FINDINGS OF FACT

1. Defendant, Ransburg Electro-Coating Corp., is a corporation organized and existing under the laws of the State of Indiana and has its principal office and place of business at Barth and Sanders Streets, Indianapolis 7, Indiana.[1]

2. The plaintiff, Binks Manufacturing Company is a corporation organized and existing under the laws of the State of Delaware and has its principal office and place of business at 3114-40 West Carroll Avenue, Chicago 12, Illinois.[2]

3. The action of the defendant arises under the patent laws of the United States. 35 U.S.C., Section 271, 281, et seq.[3]

4. The amount involved in the controversy presented by plaintiff's cross-counterclaim is in excess of Three Thousand Dollars ($3,000.00), exclusive of interest and costs and its action arises under the anti-trust and anti-monopoly laws of the United States, 15 U.S.C., Section 1, 2, 14 and 15.[4]

---

1. Cross-Counterclaim (par. 4), R. I: 31; Answer to Cross-Counterclaim (par. 4), R. I: 41.

2. Cross-Counterclaim (par. 3), R. I: 31; Answer to Cross-Counterclaim (par. 3), R. I: 41; Plaintiff's Admission 1, R. III: 53.

3. Counterclaim (par. 1), R. I: 1; Answer to Counterclaim (par. 1), R. I: 5.

4. Cross-Counterclaim (pars. 1, 2), R. I: 31; Answer to Cross-Counterclaim (pars. 1, 2), R. I: 41.

Defendant's Development of Electrostatic Spray-Painting Methods and Apparatus

5. On August 3, 1954, the defendant was issued United States Letters Patent Number 2,685,536, entitled "Method for Electrostatically Coating Articles," on an application for patent filed on September 29, 1944, in the names of William A. Starkey and Edwin M. Ransburg, which patent is owned by defendant.[5] On June 4, 1957, the defendant was issued United States Letters Patent Number 2,794,417, entitled "Apparatus for Electrostatically Coating Articles" on an application filed June 4, 1954, based upon the aforesaid application filed September 29, 1944, in the names of William A. Starkey and Edwin M. Ransburg, which patent is owned by defendant.[6] The above patents, which relate to the No. 2 Process, are those in suit.[7] The application of June 4, 1954, upon which patent 2,794,417 issued, was a division of the application of September 29, 1944, on which patent 2,685,536 issued.[8]

6. The defendant, since its incorporation on January 1, 1948, has been engaged in the business of marketing systems employing electrostatic forces in the automatic application of paint or other liquid coating to articles of manufacture carried by conveyors.[9] The two coating sytems which it markets are:

---

5. Counterclaim (pars. 2, 4), R. I: 1, 3; Answer to Counterclaim (pars. 2, 33), R. I: 5, 16; Cross-Counterclaim (pars. 7, 8), R. I: 32; Answer to Cross-Counterclaim (pars. 7, 8), R. I: 42; Dx. 3, 4, R. II: 1021-35.

6. *Ibid.*

7. *Ibid.*

8. Dx. 4 (Column 1, lines 17-19), R. II: 1033.

9. E. Ransburg Deposition, R. III: 145-46.

(a) The "No. 1 Process," first developed, in which paint sprayed from essentially conventional compressed-air spray guns is electrostatically deposited on the articles;[10] and

(b) The "No. 2-Process," later developed, in which paint atomized under the influence of electrostatic forces without the use of compressed-air is electrostatically deposited on the article.[11]

In addition to its coating systems, defendant markets a "detearing" system, in which electrostatic forces are used to remove the "tears" of excess paint which accumulate on the lower edges of articles previously coated by dipping or flow-coating.[12]

7. Defendant's present business had its origin in an individual proprietorship operated by Harper J. Ransburg, a resident of Indianapolis, Indiana, who was engaged in the manufacture and sale of a variety of houseware items, such as cannister sets, bread boxes and similar accessories.[13] He was assisted in this business by his three sons, Gregg, Harold and Edwin, and in 1941 they formed a partnership, the Harper J. Ransburg Co., which continued to make and sell housewares, but which also commenced the marketing of the detearing process and the

---

10. Dx. 7, R. III: 460; Witness Miller, R. I: 251-53, R. III: 73-75; Px. EEEE (pp. 8-9), R. II: 854.

11. Dxs. 17-A, 17-B, 17-C, R. II: 959-61; Px. IIII (pp. 3, 4), R. III: 455-59; Px. UUUU (p. 2), R. III: 389; Witness Miller, R. I: 255-56, 264-67, 268-70, 272-73, R. III: 80-86, 92-93.

12. Miller Deposition, R. III: 62; Px. AAAA, R. II: 1123-33; Px. EEEE (pp. 10-13), R. II: 855-57.

13. Witness H. Ransburg, R. I: 409-10.

No. 1 Process.[14] As of January 1, 1948, with the incorporation of the defendant, the two businesses were separated, the defendant corporation taking over the business of marketing the coating and detearing systems.[15] Defendant is owned by the four Ransburgs, who are its officers and directors.[16]

8. Prior to the development of the Ransburg No. 1 Process, defendant's predecessor had painted many of its products by a widely used system in which a spray of paint formed by and projected from a conventional compressed-air spray gun was directed toward the articles to be painted.[17] Such systems still are widely used in industry.[18] However, when coating is done by means of compressed-air spray guns, much of the material sprayed is not deposited upon the article, but is carried beyond it by the air blast and is lost as "overspray"; and a substantial investment and expense is necessary in installing, maintaining, and operating spray booths, paint collecting devices, and exhaust systems.[19] The Ransburg electrostatic coating systems were devised to reduce the cost of coating by the spray method.[20]

---

14. Witness H. Ransburg, R. I: 409-10.

15. Witness H. Ransburg, R. I: 409; Ex. I.I.-2.

16. E. Ransburg Deposition, R. III: 155.

17. Witness H. Ransburg, R. III: 164-65.

18. Plaintiff's Answers to Interrogatories 122, 123, 125, R. III: 49.

19. Witness Miller, R. III: 71-74; Witness H. Ransburg, R. III: 165.

20. Witness H. Ransburg, R. III: 165-66.

9. Commencing in about 1937 the Ransburgs conducted experiments in using a high-voltage electrostatic field to deposit more efficiently upon articles of manufacture coating material atomized by conventional compressed-air spray guns.[21] As the result of this work, they developed their "No. 1 Process," in which the coating material is sprayed by means of compressed-air spray guns into an electrostatic field which is maintained between wires or electrodes and the conveyorized articles of manufacture, so that the paint particles are electrically charged and urged toward deposition upon the articles by the effect of the field.[22] This process substantially reduced over-spray loss and labor expense, and in many commercial applications was a substantial improvement over conventional non-electrostatic painting methods.[23] In 1944 the partnership commenced marketing the No. 1 Process, which was the first commercially-used electrostatic spray painting system.[24]

10. The equipment required by a user of the No. 1 Process includes, in addition to such conventional items as conveyors and ovens (none of which has at any time been supplied by defendant), a voltage source, or power pack, capable of an output in the order of 90,000 volts.[25] At the time when the partnership was ready to license others to use the process, none of the power packs available on the

21. Witness H. Ransburg, R. III: 165-66; E. Ransburg Deposition, R. III: 146.

22. Witness H. Ransburg, R. III: 166-67; Witness Miller, R. III: 121; Px. EEEE (pp. 8-9), R. II: 854.

23. Witness H. Ransburg, R. I: 428-30, R. III: 167-68.

24. Witness H. Ransburg, R. I: 423-29, R. III: 166-67, 204-06.

25. Witness H. Ransburg, R. III: 167-68; Witness Miller, R. I: 294, 299.

market was deemed by it to be sufficiently safe for use in the process, nor were any suitable combined electrical and paint supply controls available.[26] Because of the unavailability of these items on the market, the partnership designed and produced a safer power pack and suitable combined controls, so as to be in position to interest prospective licensees in the process.[27] The agreement licensing the user to use the process provided that Ransburg would furnish on essentially a lease basis the specialized power pack, controls, electrodes, insulating electrode supports, and high-voltage lead-in means.[28] The necessary spray guns and other conventional equipment were not supplied by Ransburg, but were purchased by the licensees from plaintiff and other suppliers.[29]

11. While the No. 1 Process was a definite improvement over non-electrostatic air spray coating, considerable loss of coating material persisted in many applications because the electrostatic field only partially counteracted the tendency of the compressed-air blast to carry much of the material elsewhere than upon the articles being coated.[30] The Ransburg partnership continued its research and development work, and as a result thereof developed its No. 2 Process, by which articles could be coated electrostatically without the necessity of compressed-air spray

---

26. Witness Miller, R. I: 336-37, R. III: 64-68, 75-78, 121-22; Witness H. Ransburg, R. III: 167-68, 204-05.

27. *Ibid.*

28. Witness Miller, R. I: 364-65, Px. EEEE (p. 9), R. II: 854; Witness H. Ransburg, R. III: 168-69.

29. Witness Miller, R. III: 68; Witness H. Ransburg, R. I: 410, R. III: 169-70; Roche Deposition, R. III: 240-42.

30. Witness Miller, R. III: 78-79; Witness H. Ransburg, R. III: 170-71.

guns to atomize the material.[31] In this process, in substance, the electrostatic field is maintained directly between the atomizing device, or head, and the articles on the conveyor.[32] The coating material is fed at a controlled rate to and distributed along the extended edge of a stationary or rotating atomizing head.[33] The strength of the field at the edge is such that the field is capable of electrostatically atomizing fine, electrically-charged particles from the liquid.[34] The field then disperses those particles in the form of a spray, and deposits them upon the articles of manufacture.[35] This process, in many applications, virtually eliminates over-spray, and thus paint loss, further reduces labor costs, and substantially reduces the manufacturer's investment in spray booths, exhaust systems, and related equipment.[36] The first license of the No. 2 Process was granted by defendant in 1949, under a special consulting and research agreement with Enameled Steel and Sign Company of Chicago, Illinois.[37] General marketing of the system was commenced in 1951.[38] Inasmuch as the special paint atomizers and accurately controllable paint supply systems required for operation of the No. 2

---

31. Witness Miller, R. I: 255-56, R. III: 80-81, 92-93; Witness H. Ransburg, R. III: 170-71.

32. Witness Miller, R. I: 256-57, 264-67, 268-70, 272-74, R. III: 81-92, 92-96, 111-13; Px. IIII (pp. 3, 4), R. III: 455-59; Px. UUUU (p. 2), R. III: 389.

33. *Ibid.*

34. *Ibid.*

35. *Ibid.*

36. Witness Miller, R. III: 96; Witness H. Ransburg, R. I: 430-31, R. III: 171-72.

37. Witness H. Ransburg, R. III: 172-73.

38. Witness Howarth, R. III: 129-30; Witness H. Ransburg, R. III: 171-73.

Process were not available on the market, defendant designed and produced them and furnished them to licensees as part of the specialized equipment.[39]

Plaintiff's Activity in the Art Field of Electrostatic Spray-Painting

12. The plaintiff has for many years and is presently manufacturing and selling spraying equipment for paint and other materials in this District and elsewhere in the United States.[40] With its predecessors, it has been in business since 1892, has branch offices or warehouses in twenty-eight major cities in the United States and Canada, sells a line of merchandise under the slogan "Everything for Spray Painting," and is one of the two largest merchandisers of spray-painting equipment in the United States.[41] It sells, and for many years has sold, a large volume of compressed-air spray guns, for both manual and automatic operation, and in many instances sells complete finishing facilities as a package, including spray guns, spray booths, paint-collecting devices, exhaust systems, and related equipment.[42] In 1958 it added to its advertised line or products electrostatic spray-painting equipment of the compressed-air spray type.[43]

---

39. Witness H. Ransburg, R. III: 172-73.

40. Cross-Counterclaim (par. 5), R. I: 31; Answer to Cross-Counterclaim (par. 5), R. I: 41.

41. Plaintiff's Admission 1, R. III: 53; Roche Deposition, R. III: 216-19, 233-35.

42. Plaintiff's Answers to Interrogatories 122, 123, 125, R. III: 49; Roche Deposition, R. III: 209-16.

43. Plaintiff's Answers to Interrogatories 27, 28, R. III: 45-48.

13. Plaintiff's first knowledge of a method for painting by the use of compressed-air and an electrostatic field was attained in the late 1930's or early 1940's from knowledge of the system developed by defendant's predecessor, and in December, 1942, at the invitation of the latter, several of plaintiff's representatives attended a demonstration of the Ransburg air-type No. 1 electrostatic coating system at Indianapolis, Indiana.[44] Plaintiff's first knowledge of an airless electrostatic painting process was obtained from defendant's No. 2 system, after it was commercialized.[45]

14. After discussions of the subject of electrostatic spray painting, plaintiff purchased a power pack in January, 1951, and its personnel first carried out experiments in that year.[46] Its research was sporadic until April, 1952, when it hired for that purpose James H. Rice, who began by reviewing all of the patents in the field.[47] Also in 1952 it negotiated with William A. Starkey, a co-patentee of the patents in suit, and Harry Green, former research employees of defendant, with a view of employing them, but no agreement was reached.[48] During 1951 and 1952 plaintiff gave consideration to acquiring the business of Ashdee Electrostatic Products, Inc., which was in the business of marketing air-type electrostatic spray coating systems in

---

44. Plaintiff's substituted Answer to Interrogatory 113, R. III: 49; Plaintiff's Admission 3, R. III: 53; Roche Deposition, R. III: 219, 219-21.

45. Plaintiff's Answer to Interrogatory 114, R. III: 49; Roche Deposition, R. III: 221, 222.

46. Plaintiff's Admission 4, R. III: 53; Plaintiff's Answer to Interrogatory 115, R. III: 49; Roche Deposition, R. III: 232-33.

47. Roche Deposition, R. III: 232-33; Rice Deposition, R. I: 699, R. III: 259-60.

48. Plaintiff's Admission 5, R. III: 53.

competition with the defendant's No. 1 and No. 2 systems, but the negotiations were terminated.[49] In 1953 plaintiff retained Midwest Research Institute, of Kansas City, Missouri, to do research for it on electrostatic spray-painting and to develop a new or improved spraying technique; such research was performed in 1953 and 1954.[50]

15. Plaintiff's efforts culminated in the development of an atomizing head, or emitter, designated SK661, a drawing of which was made and dated on May 12, 1954.[51] This emitter is intended for use in an airless electrostatic coating system which is the subject of the charge of infringement in defendant's counterclaims.[52]

16. After plaintiff learned of the issuance of defendant's Starkey method patent, No. 2,685,536, which was issued on August 3, 1954, its work in the field of airless electrostatic spray-painting became dormant until the negotiations with Ford Motor Company which are hereinafter referred to.[53]

17. The only equipment which plaintiff has attempted to market for the airless electrostatic spray-painting is its SK661 emitter and the equipment related thereto, and the only prospective vendee to which plaintiff has attempted to sell such equipment is the Ford Motor Company.[54] In

49. Plaintiff's Answer to Interrogatory 93, R. III: 48; Roche Deposition, R. III: 227-32, 238.

50. Roche Deposition, R. I: 672-73.

51. Plaintiff's Admission 7, R. III: 53.

52. Dx. 2, Stipulation filed November 7, 1958, R. I: 233-34.

53. Plaintiff's Admission 8, R. III: 53; Roche Deposition, R. III: 239, 248-50; Rice Deposition, R. III: 265.

54. Plaintiff's Admissions 16, 17, R. III: 54.

response to a request by Ford, plaintiff on January 25, 1956, quoted its price upon such equipment with the express proviso:

> "This bid shall not be binding upon Binks Manufacturing Company as an offer unless and until Ford Motor Company shall indemnify Binks Manufacturturing Company and hold it free and harmless against any and all suits or causes of action which may be brought against Binks Manufacturing Co. for infringement and/or contributory infringement of Starkey et al patent 2,685,536 by reason of manufacturing and furnishing to Ford Motor Company the devices comprising the subject matter of said bid or by use by Ford Motor Company of said devices." [55]

Ford did not purchase the equipment.[56]

18. In July, 1956, plaintiff initiated correspondence with defendant, stating that it was "ready to market a paint sprayer which electrostatically atomizes the paint without making use of air," and asking that defendant send its standard license form.[57] When defendant submitted its standard No. 2 Process license forms 439 (with equipment) and 440 (without equipment), plaintiff sent defendant a print of its SK661 drawing of May 12, 1954, said that neither form would be satisfactory, and stated that it was interested in "a license to make and sell equipment for this type of spray painting under your Starkey patent" No. 2,685,536.[58] Plaintiff further advised defendant that

---

55. Plaintiff's Admission 18, R. III: 54-55; Px. OOOOO, R. III: 394-95; Px. PPPPP, R. III: 412-13; Roche Deposition, R. I: 676-77, 678-80, R. III: 243.

56. *Ibid.*

57. Px. ZZZZ-1, R. II: 894.

58. Pxs. ZZZZ-2 to -10, inclusive, R. II: 895-903.

form 440 was not acceptable to plaintiff because it required "continuous periodic payments of royalties based on the extent of the coating material used," and that plaintiff's sales practice was "such that any license agreements that we might enter into would have to require the payment of only one royalty at the time of each sale so that thereafter the customer's use of the equipment would be free of any further royalty payments," and asked that defendant consider "granting a license requiring, in the instance of each sale of spray equipment, only a single royalty payment at a given rate of percentage of the sales price."[59] In reply defendant stated in its letter of September 21, 1956:[60]

> "* * * Granting licenses on this basis would require a complete change in our marketing policy and a change of all of our licenses now in effect, as otherwise a large part of our licensees would be treated unfairly. We also believe that the system you suggest is not satisfactory for determining the proper value for the use of the process.
>
> "In view of the foregoing we trust you can readily understand why we feel we cannot comply with your request. We want you to know that licenses are available to your customers for painting with our method and we assume you will not furnish the equipment which has been the subject of this correspondence to such customers unless they are licensed by us."

Thereafter, on October 11, 1956, plaintiff filed the complaint in this cause, seeking a declaratory judgment that

59. Px. ZZZZ-12, R. II: 910.

60. Px. ZZZZ-13, R. II: 911-12.

the Starkey process patent was invalid and alleging misuse of the patent, anti-trust law violations, and unfair competition by defendant.[61]

Nature of the Patents in Issue and Their Position in the Art

19. In the No. 1 Process,[62] which defendant's predecessor had developed in the late 1930's,[63] articles to be spray-painted were conveyed past an electrode.[64] The articles were grounded, while an electrical potential on the order of 90,000 volts[65] was applied to the electrode to create an electrostatic field between it and the articles moving past it.[66] A paint spray formed outside that field by conventional compressed-air spray guns was directed into the field with the result that the sprayed particles acquired electrical charges which caused them to be attracted to the articles.[67] While this system reduced losses of paint as compared with the older non-electrostatic spray-painting systems, the air employed to form the spray and project it into the field had to escape from the coating zone and carried away with it a substantial portion of the paint sprayed.[68] Spray booths and other equipment were still necessary to handle the paint escaping as overspray from

61. Plaintiff's original Complaint herein.

62. Dx. 7, R. III: 460.

63. Witness Miller, R. III: 63.

64. Witness Miller, R. I: 251-52.

65. Witness Miller, R. I: 298-99.

66. Witness Miller, R. I: 253-54.

67. Witness Miller, R. I: 252-53.

68. *Cf.* Witness Miller, R. III: 71-72, 78-79.

the coating zone.[69] Even with the benefit of electrostatic forces, paint losses in this method of spray painting may amount to as much as about one-third of the paint sprayed.[70]

20. The systems[71] illustrated in the patents in suit eliminated the air streams which caused substantial paint losses even in the No. 1 Process.[72] In each of such systems, the paint is supplied to and oozes at a controlled rate from the inside to the outside of an atomizer[73] which is maintained at an electrical potential corresponding to that impressed on the electrode in the above-described No. 1 system.[74] The articles to be coated are conveyed past such atomizer and are maintained at ground potential[75] to create an electrostatic field between them and the paint fed from the interior of the atomizer.[76] Such paint is atomized electrostatically into a spray of finely-divided, electrically-charged particles which are electrostatically deposited on the articles.[77] These systems, which exemplify the "No. 2 Process," employ no air for atomizing the paint or forming the spray,[78] reduce paint losses to 1% or 2% of the paint

69. Witness Miller, R. III: 79.
70. Witness Miller, R. III: 79.
71. Dxs. 8-A, 8-B, R. III: 279-80.
72. Witness Miller, R. III: 92-93.
73. Witness Miller, R. III: 82-83, 87-88.
74. Witness Miller, R. III: 106.
75. Witness Miller, R. III: 81-82.
76. Witness Miller, R. III: 82-83.
77. Witness Miller, R. III: 84-86.
78. Witness Miller, R. III: 92-93.

sprayed,[79] and can be practiced in the open shop without the necessity for expensive paint exhaust and overspray recovery equipment.[80]

21. All forms of atomizers shown in the two patents in suit provide for electrostatic atomization of the paint at individual points of a series of points disposed in a row.[81] In the form of atomizer shown in Figs. 5 and 6 of the patents in suit, the paint oozes through orifices in the head and forms a continuous film which is supported by a row of needles projecting downwardly from the head and which bridges the spaces between the spaced points where the atomization occurs.[82]

22. Patent 2,685,536 in suit is directed to methods of electrostatically spray painting without the use of air.[83] It contains eleven claims, all of which, with the exception of Claims 7 and 9, are asserted by defendant to have been infringed by plaintiff. Claims 1, 2, and 10 have been treated as typical.[84]

23. Patent 2,794,417 in suit is directed to forms of apparatus for use in practicing the method of the other patent.[85] It contains four claims, but only Claim 4 is relied upon by defendant as having been infringed by plaintiff.[86]

---

79. Witness Miller, R. III: 96-97.

80. Witness Miller, R. III: 107-08.

81. Dxs. 8-A, 8-B, R. III: 279-80.

82. Dx. 10-D, R. II: 958; Witness Miller, R. I: 261-262, 301.

83. Dx. 3, R. II: 1021-28.

84. Dx. 3, R. II: 1021-28; Tr. 15, R. III: 436.

85. Dx. 4, R. II: 1029-35.

86. Dx. 4, R. II: 1029-35: Tr. 15, R. III: 436.

24. The original application Serial No. 556,390, filed September 29, 1944, which resulted directly in patent No. 2,685,536 and indirectly in patent No. 2,794,417, had extended prosecution and careful consideration in the hands of the Examiner and Board of Appeals of the Patent Office.[87] A total of 22 references were cited against it, and it was twice considered by the Patent Office Board of Appeals before being allowed.[88] Included in the prior art cited against it were references[89] showing the electrostatic deposition of paint and other particles suspended in air streams and at least one reference showing the electrostatic atomization of liquids.[90]

25. Any spray-painting operation requires that the paint be atomized at an adequate rate, that the atomized particles be formed into a spray of suitable shape and size, and that the spray particles be small enough to avoid creating a rough finish and large enough that their volatile constituents will not evaporate to such an extent that the deposited particles are too dry.[91] The method of patent 2,685,536 in suit meets those requirements and has been widely used in industry to paint a variety of types of articles including automobile chassis and shock absorbers, light fixtures, furniture frames, and cabinets for domestic refrigerators and laundry appliances.[92]

---

87. See File Wrappers, Dxs. 5-A, 5-B which were transmitted by the Court of Appeals to this Court pursuant to a motion by Petitioner under Rule 22, proof of service dated August 30, 1960.

88. See File Wrappers, Dxs. 5-A, 5-B (pp. 252, 393).

89. Such as Pugh patent (1,855,869), R. II: 1073, and Meston patent (2,097,233), R. III: 467.

90. Darrah patent (1,958,406), R. II: 1081.

91. Witness Miller, R. I: 250, R. III: 68-71.

92. Pxs. UUUU, R. II: 877.

Prior Art

* * * *

40. Method patent 2,685,536 in suit is for a broad, basic invention fundamentally different from any previous spray-coating process of record here.[147] The subject matter defined by each of its claims 1 to 6, 8, 10 and 11 in suit, is novel and involves invention over anything disclosed in the prior art.

41. Claim 4 of apparatus patent 2,794,417[148] in suit describes electrostatic spray coating apparatus wherein there is maintained between an atomizer and the work an electrostatic field capable of atomizing the liquid-coating material and depositing the atomized particles on the work. An important feature of the claim is means for distributing the unatomized coating material to a plurality of points of atomization so close together that the liquid bridges the spaces between them. Such a feature, which promotes uniformity in the distribution of liquid to the several points where atomization takes place, is inherent in Figs. 5 and 6 of the patents in suit,[149] is novel,[150] and involves invention over the prior art.

42. The subject matter defined by the claims of the patents in suit has filled a long-felt want, and methods and apparatus embodying such subject matter have found wide use in industry.[151] Hundreds of companies, including some

147. Entire record.

148. Dx. 4, R. II: 1029-35.

149. Witness Stellman, R. III: 144; Dx. 10-D, R. II: 958.

150. Entire Record.

151. See Defendant's Answer to Interrogatory 35(a) and list of licensees there referred to, R. I: 50, 152-77.

of the largest in the country,[152] have paid the defendant substantial fees for the right to use such subject matter.[153] While the specific atomizers used in defendant's commercial spray coating systems differ in detail from the specific atomizers shown in the patents in suit, the commercial systems all embody the fundamental concepts to which the claims in suit are directed,[154] and the commercial success the systems have enjoyed is to be credited basically to the inventions those claims describe.

Other Issues of Validity

* * *

NORMAN—8790

45. The two patents in suit are for inventions different from each other.[160] While the contemplated operation of apparatus patent 2,794,417 inherently involves the method claimed in patent 2,685,536, that method can be practiced by forms of apparatus[161] outside the scope of claim 4 of patent 2,794,417.

* * *

152. Witness Howarth, R. III: 130.

153. Witness Howarth, R. III: 130.

154. Witness Miller, with reference to Dxs. 17-A, 17-B, 17-C, R. I: 264-75, R. II: 959-61, R. III: 107-10.

160. *Prima facie* validity (35 U. S. C. 282) and absence of countervailing evidence.

161. *E.g.* The apparatus of Figs. 1-4 of the patents in suit, R. II: 1021-29; *cf.* Witness Miller, R. I: 289, 300-01.

Alleged Misuse of the Patents in Suit
(Fourth Defense to Supplemental)

60. Defendant has employed essentially the same marketing system and licensing practices from the time of its organization to the present.[206] It seeks to interest prospects in its coating system by advertising in trade publications, by the distribution of sales brochures, and by direct solicitation, in all of which it refers to its systems as the No. 1 and No. 2 "process."[207] If a prospect expresses interest, defendant obtains from him data on his product, his coating material, the type and thickness of finish desired, his paint "mileage" (finished units per gallon) under existing procedures, his conveyor, and other relevant factors, and invites him to submit samples of his products for a laboratory test.[208]

61. The electrostatic spray coating needs of defendant's prospective customers vary substantially, depending upon the nature and size of the article to be coated, the coating material to be used, the type of finish desired, and other production considerations.[209] In defendant's laboratory a painting operation is designed, set up, and operated for the prospect without obligation, employing his products and coating material and simulating the conditions existing or contemplated in his plant.[210] From this pilot operation, anticipated coating material savings are

206. Witness H. Ransburg, R. I: 410.

207. Witness H. Ransburg, R. I: 410-11, R. III: 173-75.

208. Witness H. Ransburg, R. III: 174-75; Miller Deposition, R. III: 60-61; Howarth Deposition, R. I: 571-74.

209. Witness H. Ransburg, R. III: 176-77.

210. Witness H. Ransburg, R. III: 175-77; Miller Deposition, R. III: 60-61; Howarth Deposition, R. III: 124-26.

computed and the application and quality of the finish are demonstrated to the prospect.[211] If the prospect remains interested, defendant's engineers then make a drawing of the system and apparatus arrangement demonstrated to and desired by the prospect, and a proposed agreement is submitted to him on one of defendant's standard printed agreement forms.[212]

62. The agreement licenses the customer, or user, to use the particular system shown schematically in the identified engineer's drawing for the purpose of coating the articles specified, and is terminable by the user at any time upon a thirty-day notice, and by the defendant at any time after three years upon a six month notice.[213] Under the terms of the agreement, when desired by the prospective customer, defendant furnishes, on essentially a lease basis, the specialized equipment necessary for the operation of the system designed for him, sends its engineer to supervise installation in the user's plant, and undertakes to replace parts which become defective.[214]

As consideration for the foregoing, a licensee of the No. 2 Process pays: (a) an initial fee which varies with the design of the system and apparatus licensed, and (b) monthly fees representing a portion of the user's savings resulting from the use of the system.[215] The size, shape, and contour of the article to be coated determine the quan-

---

211. Witness H. Ransburg, R. III: 177.

212. Witness H. Ransburg, R. III: 177-78.

213. Defendant's Answer to Interrogatory 8 (Exs. D-21, D-36 thereto), R. III: 37-41, R. III: 431.

214. *Ibid.*

215. Howarth Deposition, R. I: 575; Miller Deposition, R. III: 61.

tity of paint which can be saved through use of the system, and defendant has classified articles of manufacture on this basis.[216] The monthly fee is computed as a percentage of the cost of the coating material used in the system by the user, which percentage depends upon the class into which the article falls and is in proportion to the potential paint saving in coating that article.[217] In practice, this formula, as applied to each individual user, results in his paying for the use of the system compensation related to the actual benefit to that user in his particular operation, subject to a specified minimum.[218]

The initial fee of a No. 1 Process licensee varies with the number of air-spray guns which are to be used, and the monthly fee consists of a fixed minimum amount, plus a percentage of the cost of the coating material used in the system by the user, which percentage is uniform for all users and decreases as the quantity of material used increases.[219]

63. In the event any prospective user would not desire that defendant furnish the specialized equipment, installation supervision and parts replacement service, but would desire a license under defendant's applicable patents to use one of the aforesaid systems, defendant will grant such non-equipment license by means of a different standard printed form agreement, in consideration of substantially lower initial and monthly fees.[220]

---

216. *Ibid.*

217. E. Ransburg Deposition, R. III: 151-54, R. II: 753-55; Miller Deposition, R. III: 61.

218. *Ibid.*

219. Px. NN, R. II: 753-55.

220. Witness H. Ransburg, R. III: 178-79, 181-85, 207-08; Px. JJJ-2, R. II: 816-18; Px. NN, R. II: 753-55; Dxs. 23, 24, 26, 27, 28, 29, R. III: 282-349; Defendant's Answer to Interrogatory 8 (Exs. D-22, D-38 thereto), R. III: 15-17, 42-44.

64. Satisfactory performance of defendant's systems depends upon the character and quality of the specialized equipment incorporated therein.[221] Defendant recommends its systems and enters into license agreements only where its analysis shows that the system will perform satisfactorily for the licensee, effect significant savings, and reflect credit upon the process.[222] Where the license agreement requires defendant to furnish such equipment, supervise its installation, and replace defective parts, defendant, as a matter of standard business policy, guarantees to the user that the system will coat the user's articles to his satisfaction, and will permit the user to terminate the agreement with refund of fees if the system does not do so.[223]

65. Although much of the specialized equipment required for the practice of defendant's processes was and is not available on the open market and defendant has produced the same and furnished it to its licensees in order to be able to market its processes, it has always been the express policy of the defendant, and so understood by all of its officers and sales and management personnel, that if a prospective licensee preferred to obtain equipment elsewhere than from defendant, he was free to do so and at reduced fees could obtain a license from defendant without equipment, installation supervision, or part-replacement service.[224] This policy was expressed to all distrib-

221. Witness H. Ransburg, R. III: 178-80.

222. Witness H. Ransburg, R. III: 179-80; E. Ransburg Deposition, R. III: 154-55.

223. Witness H. Ransburg, R. I: 411-12, 419-21; Howarth Deposition, R. III: 126-28.

224 Witness H. Ransburg, R. I: 463-64, R. III: 178-79, 180-84, 184-85, 185-88; Dxs. 23, 24, 26, 27, 28, 29, R. III: 282-349; Px. NN, R. II: 753-55; Px. JJJ-2, R. II: 816-18; H. Ransburg Deposition, R. I: 542-43; Pleva Deposition, R. I: 615-17, R. III: 267-68; Witness E. Ransburg, R. III: 159.

utors and salesmen in a bulletin issued by the Ransburg partnership on August 29, 1947, and has been reiterated by defendant in bulletins of August 18, 1950; May 27, 1953; July 15, 1953; May 13, 1954; April 4, 1955; and June 6, 1956.[225] Although no prospect of defendant had ever expressed interest in a license without equipment, in 1953 it prepared and stocked standard printed contract forms for licenses without equipment as to each process; instructed its sales personnel to advise all prospective customers that non-equipment licenses were available; and informed its existing licensees by letter that should they desire to return defendant's equipment and retain only a license, their monthly fees would be reduced by stated amounts.[226] Those licensees with whom agreements had been consummated, but who had not yet paid the initial fee, were informed that the initial fee would also be reduced by a stated amount.[227] Again on May 13, 1954, salesmen were reminded by bulletin to advise all prospective customers that they could obtain a license without equipment for reduced initial and monthly fees.[228] Since 1953 defendant's sales brochures describing the No. 2 Process have stated that defendant will supply the equipment "when desired," and are handed or mailed to virtually every prospect and distributed at defendant's display at trade shows at the rate of approximately 10,000 copies

225. *Ibid.*

226. Dx. 26, R. III: 284-312; Px. JJJ-2, R. II: 816-18; Defendant's Answer to Interrogatory 8 (Exs. D-11, D-30 thereto), R. III: 1-5, 18-23; Witness E. Ransburg, R. III: 156-57; Px. S, R. II: 730; Pxs. Z-1 to -7, inclusive, R. II: 731; Px. LLL-2, R. II: 824; Pleva Deposition, R. III: 268-69; H. Ransburg Deposition, R. I: 540-41, 542-43.

227. Witness E. Ransburg, R. III: 156-59; Dxs. 34 to 40, inclusive, R. III: 355-61.

228. Witness H. Ransburg, R. III: 186; Dx. 27, R. III: 313-14.

per year.[229] When proposed agreements providing for equipment are transmitted to the prospect, the letter points out that the agreement so provides, and states that defendant understands that the prospect prefers this contract to one under which the equipment is not furnished.[230] Defendant thus takes steps to inform its prospects in writing of the availability of process licenses without equipment upon the initial contract, and again when transmitting the proposed agreement for execution.[231]

66. The defendant has never at any time required that any person desiring a license under either of the patents in suit, or any of its other patents, must obtain from it, or pay for, equipment, installation supervision, or part-replacement service as a condition to the granting of the license.[232] No prospective licensee has requested a license to practice the process without defendant's furnishing equipment, or that any such prospective licensee has been refused such a license.[233]

67. As of the filing of this cause, defendant has granted 733 electrostatic coating licenses, of which 463 were still in force and effect.[234] Defendant has been required to

---

229. Witness H. Ransburg, R. I: 423-24, R. III: 174, 189-90; Px. UUUU (p. 15), R. II: 880; Px. VVVVV-1 (p. 14), R. III: 429; Houlberg Deposition, R. III: 272-73; Rothe Deposition, R. III: 274-76.

230. Witness H. Ransburg, R. III: 190-91; Pxs. BB-1 to -5, inclusive, R. II: 732; Px. LLL-3, R. II: 825.

231. See footnotes 229 and 230 above.

232. Entire record.

233. Witness H. Ransburg, R. III: 191; Witness E. Ransburg, R. III: 159; entire record.

234. Defendant's Answer to Interrogatory 3, R. I: 46; Witness H. Ransburg, R. I: 476-77.

furnish equipment by all agreements licensing air-type systems except (a) the license to Hillgren Manufacturing Company, Huntington Park, California, granted as part of the settlement of defendant's suit against Hillgren for patent infringement, and licensing the use of defendant's process with infringing equipment previously acquired elsewhere by Hillgren,[235] and (b) a few agreements whereby existing licensees who had defendant's equipment under a prior agreement were granted licenses to use the process for additional or extended purposes by means of equipment procured by themselves and connected by them to defendant's previously-furnished power pack.[236] All No. 2 Process license agreements have included equipment.[237]

Because of the desire of the prospective licensees to have a satisfactory working system, which will perform as demonstrated in defendant's laboratory, the licensees prefer to have defendant supply the equipment.[238] The evidence shows that 55 of defendant's licensees who received the 1953 letter advising that they could have a non-equipment license if they so preferred, subsequently executed 97 agreements for additional licenses and in every case chose an agreement requiring defendant to furnish the equipment.[239] No licensee of the defendant, at the time the license agreement was consummated, did not prefer an agreement under which defendant would furnish

235. Witness H. Ransburg, R. III: 191-92; Dx. 30, R. III: 349-54.

236. Witness H. Ransburg, R. III: 191-92.

237. Witness H. Ransburg, R. III: 192.

238. Roche Deposition, R. III: 247; Pleva Deposition, R. I: 619-21; Houlberg Deposition, R. I: 633, R. III: 270; Rothe Deposition, R. I: 636, R. III: 276.

239. Witness E. Ransburg, R. III: 159-60.

equipment to one under which it would not.[240] Nor has any licensee been in any manner coerced into taking undesired equipment, installation supervision, or part-replacement service as a condition to the grant of a license.[241]

68. The equipment supplied by defendant to its licensees consists of the minimum specialized equipment needed for use of the particular systems licensed.[242] The equipment, as a whole or combination, has no other substantial use.[243]

69. Defendant does not sell equipment outright.[244] It has never licensed anyone under its United States patents to make and sell electrostatic spray-coating systems.[245]

70. No terms for licenses with or without equipment are quoted by defendant to prospective licensees unless such prospects express interest therein or request quotations.[246] No prospective licensee ever expressed interest in, or requested, quotations on a No. 2 Process non-equipment license prior to defendant's quotation of March 23, 1954 to Webster-Chicago Corporation.[247]

---

240. Entire record.

241. Entire record.

242. Witness H. Ransburg, R. I: 424-25; Px. EEEE, R. II: 847-60; Px. IIII, R. II: 861-62, R. III: 455-59; Px. UUUU, R. II: 877-80, R. III: 389.

243. Witness H. Ransburg, R. III: 193-94.

244. Defendant's Admission 1, R. I: 194; Witness H. Ransburg, R. I: 478-79.

245. Defendant's Admission 5, R. I: 194.

246. Witness H. Ransburg, R. III: 194-95.

247. Px. LLL-1, R. II: 822-24.

Thus, the terms upon which defendant would have quoted a No. 2 Process non-equipment license, had a request therefor been made, were academic until 1954. However, the pricing schedule established by defendant in 1953 and 1954 included rates for non-equipment licenses.[248] The initial fee for a license with equipment ranged from $8,100 to $12,500 per unit, depending upon the type and complexity of the system designed; whereas a non-equipment license was available for an initial fee of $4,100.[249] The minimum monthly fee without equipment was correspondingly less than if equipment were furnished.[250] Whenever any prospective licensee requested quotation of non-equipment license terms, or showed interest in them, defendant quoted such terms.[251] Any terms quoted to any prospect for a non-equipment license made due and proper allowance for elimination of the equipment and related services not to be furnished thereunder.[252]

identif

Alleged Package Licensing

71. Defendant's license agreement forms do not identify the specific patents under which the user is licensed, but grant a right or license to use an ~~unidentified~~ process (with or without compressed-air) to coat particular items in accordance with the specially designed system shown in the identified drawing.[253] The defendant has never

248. Ex. JJJ-2, R. II: 816-18; Dx. 27, R. III: 313-14.

249. Px. III-1, R. II: 809-10; Dx. 27, R. III: 313-14.

250. Px. JJJ-2, R. II: 816-18.

251. Witness H. Ransburg, R. III: 192-93; Px. LLL-1, R. II: 822-24; Pleva Deposition, R. I: 617.

252. Entire record.

253. Defendant's Answer to Interrogatory 8 (Exs. D-1 to -38, inclusive), R. I: 114-51, R. III: 1-44, 431-35.

required any prospective licensee, as a condition to receiving a license under any patent, to take or pay for any license under any patent which did not apply to the system described in the license agreement.[254] No prospective licensee has ever requested a license under any of defendant's patents which defendant has refused to grant such license unless such prospective licensee also takes or pays for a license under one or more other patents.[255] No licensee of defendant has at any time received or paid for a license under any patent which did not apply to the system described in the license agreement.[256]

Alleged Violation by Defendant of the Anti-Trust Laws and Unfair Competition

72. On April 7, 1943, the Ransburg partnership purchased from Western Electric Company, Incorporated, the Pugh patent 1,855,869, subject to a license reserved to Western Electric and Bell System companies, which patent had not been, and was not then being, used in the seller's manufacturing operations.[257] This patent, which expired on April 26, 1949, was for a method of and apparatus for coating articles, wherein articles on a conveyor passed through a closed chamber, into which a compressed-air atomized spray of coating material was introduced, the spray nozzle and articles being connected to a source of electrical energy of high potential, giving the sprayed particles a charge opposite that of the articles and attracting

254. Entire record.

255. Witness H. Ransburg, R. III: 194-95; entire record.

256. Entire record.

257. Px. SS, R. II: 762-64; Px. SSSS (Letter of April 25, 1941, par. 1, second sentence) R. III: 387; H. Ransburg Deposition, R. III: 162-63.

them to the uncoated portions of the articles.[258] The partners deemed it advisable, if not necessary, on advice of counsel, to acquire this patent or a license under it in order to permit them to proceed with their development of their air-type No. 1 Process and to market it free from danger of possible infringement charges; and they purchased the patent for $5,000, and the defendant retained it until its expiration, with that purpose and intent.[259]

73. In settlement of interference proceedings No. 80,369 in the United States Patent Office between patent applications of Harold P. Ransburg, Serial No. 366,529, and Charles K. Gravley, Serial No. 313,914, the Ransburg partnership entered into an agreement of May 3, 1943, with the Brush Development Company, Cleveland, Ohio, under the terms of which, for cash and other consideration, Brush sold to Ransburg the Gravely application, upon which United States patent No. 2,359,476 issued on October 3, 1944.[260] This patent is upon an electrostatic method and apparatus for removing excess coating material from articles previously coated by dipping.[261] Its acquisition by the partnership and retention by the defendant did not damage the plaintiff, who has at no time attempted to market detearing devices.[262]

---

258. Px. T, R. II: 1073-80; Plaintiff's Admission 23(b), R. III: 55.

259. Witness H. Ransburg, R. III: 194-96; Px. SSSS, R. III: 387-88; E. Ransburg Deposition, R. III: 154.

260. Px. TT, R. II: 765-70; Witness H. Ransburg, R. I: 455-58.

261. Px. GGGGG, patent 2,359,476, R. II: 1113-21.

262. Entire record.

74. When the Ransburg partnership was in the initial stages of marketing its air-type No. 1 Process, it received from Behr-Manning Corporation, Troy, New York, a leading manufacturer of sandpaper and abrasives, a written notice dated November 22, 1940, stating that some of the latter's patent coverage was directed to the art of "electrodeposition of paint or other liquids," and suggesting a meeting to discuss the matter.[263] Behr-Manning's patents pertained primarily to the manufacture of abrasives and flock-coated articles.[264] However, after the parties had engaged in some discussions, the Smyser patent 1,788,600, which was issued originally on January 13, 1931, upon a method for electrostatically making abrasive articles and apparatus therefor, was reissued on January 11, 1944 (Re. 22,419), with claims extending to the electrostatic coating of articles as practiced by the Ransburg partnership.[265] Two of such claims were identical to claims originally issued in the Pugh patent, and might conceivably have been asserted against the Ransburgs and their air-type No. 1 Process customers.[266] Behr-Manning owned the rights to said Smyser reissue patent.[267] The Ransburg partners were concerned about these obstacles to their development and marketing, as expressed in their letter to Behr-Manning of July 3, 1944, as follows:[268]

---

263. Witness H. Ransburg, R. III: 197; Px. PPPP (letter of November 22, 1940), R. II: 862-63.

264. *E.g.*, Smyzer Re. 22, 419, R. II: 1039-47.

264. *E.g.*, Smyzer Re. 22,419, R. II: 1039-47.

265. Px. PPPP, R. II: 862-76a, R. III: 378-85; Px. U, R. II: 1037-47.

266. Witness H. Ransburg, R. I: 434-35; Px. PPPP (telegram of August 10, 1944), R. II: 869.

267. Px. PPPP (letter of May 20, 1941), R. II: 865-66.

268. Witness H. Ransburg, R. I: 437-39, 485-86, R. III: 197-98, 199; Px. PPPP, R. II: 862-76a, R. III: 378-85.

"Notwithstanding the wide separation of the fields in which we have been operating, it is easily possible that certain aspects of our patent protection might well overlap, particularly in view of the present Pugh status.

"It seems that we mutually can expect every advantage from resuming the discussion to some mutually satisfactory conclusion so that each of us may aggressively pursue our endeavors without concern."

After further negotiations, the parties entered into an agreement as of September 26, 1944, whereby Ransburg granted to Behr-Manning an exclusive royalty-free license with right to sub-license under Ransburg's listed patents and applications, limited in substance to abrasive, flock-coated, and fiber-coated articles; and Behr-Manning granted to Ransburg a similar license under the listed Behr-Manning patents and applications, for use in "electrostatic propulsion, dispersion, orientation, deposition," etc., of liquid particles, except as to the aforesaid abrasive, flock-coated, and fiber-coated articles.[269] Such patent rights as the Ransburg partnership received pursuant to this agreement were not directed to airless electrostatic spray painting or coating, and no rights were granted by Ransburg to Behr-Manning under the Starkey, et al, application of September 29, 1944, which resulted in the patents here in suit.[270] On January 1, 1948, defendant succeeded to the rights of the partnership under the agreement.[271] Said Smyser reissue patent expired on January 13, 1948.[272]

---

269. Px. UU, R. II: 771-78.

270. Px. UU, R. II: 771-78.

271. E. Ransburg Deposition, R. III: 145-46.

272. Px. U, R. II: 1037-47.

75. Prior to the execution of said agreement of September 26, 1944, Behr-Manning was not engaged in the business of marketing electrostatic spray-painting systems of either the air or airless type; had done no development work in that field; and in fact was excluded therefrom by the Harold P. Ransburg, et al. patents 2,247,963 and 2,334,648, and by Pugh patent 1,855,869.[273] Neither has defendant or its predecessor at any time made or marketed abrasives or flock-coated articles.[274] The agreement, having been executed at a time when Behr-Manning was already excluded from said field by Ransburg's patents, did not as a matter of fact exclude or remove Behr-Manning from said field as an existing or potential competitor of Ransburg.[275] After the execution of the agreement, defendant received two inquiries as to the use of electrostatic processes for manufacture of abrasive, flock, or fiber products, and in each instance the inquirer was informed that defendant's interest was in the painting field and that perhaps Behr-Manning could assist the inquirer.[276] There is no evidence of any agreement, understanding, or arrangement between Behr-Manning and defendant, except as set forth in said written agreement.[277] The sole intent and purpose of the partnership in executing said agreement, and of defendant in succeeding to it, was to permit the marketing of its air-type No. 1 Process free from the possible risk of claims or suits for infringement of the

273. Witness H. Ransburg, R. I: 440-41, R. III: 198, 206-07; Dx. 16, R. II: 1095-1103; Px. HHHHHH (patent 2,334,648), R. III: 489; Px. T, R. II: 1073-80.

274. Witness H. Ransburg, R. III: 198-99.

275. See references note 273, *supra*; Px. UU, R. II: 771-78.

276. Defendant's Answers to Interrogatories 82-83, R. I: 57-58; Defendant's Admissions 81, 82, R. I: 206-08.

277. Entire record.

listed Behr-Manning patents.[278] The agreement in no way prohibited either party from later entering the field theretofore engaged in by the other, except insofar as the patents which were the subject of the agreement would have prevented such entry.[279]

76. Among the patents under which the Behr-Manning agreement purported to give the Ransburg partnership a license were Wintermute patent 2,221,338 and Meston patent 2,097,233.[280] After the execution of the agreement, in marketing its No. 1 Process, the partnership gave assurances to some of its prospective licensees that it had an exclusive license under said patents, and license agreements were thereafter consummated.[281] In early 1948, defendant learned that, at the time of the execution of the agreement with Behr-Manning, the latter did not in fact have the right to grant Ransburg a license under said two patents, and that such right was owned by Research Corporation.[282] Thereafter on October 7, 1948, defendant executed an agreement with Research Corporation whereby, in consideration of the payment of royalties, defendant obtained an exclusive license under said two patents, with the proviso that, at any time after June 30, 1951, either party could convert the license to a non-exclusive one.[283] By written notice dated May 26, 1954, defendant

278. Witness H. Ransburg, R. III: 197-200; H. Ransburg Deposition, R. III: 163-64.

279. Px. UU, R. II: 771-78.

280. Witness H. Ransburg, R. III: 200-01, 204; Px. UU, R. II: 771-78.

281. Witness H. Ransburg, R. III: 200-01.

282. Witness H. Ransburg, R. 1: 484, R. III: 200-01.

283. Px. VV, R. II: 779-90.

exercised this right and so converted the license.[284] The Meston patent expired on October 26, 1954, and the Wintermute patent expired on November 12, 1957.[285] The intent and purpose of defendant in executing said agreement was to protect itself and its licensees against the possible risk of claims or suits for infringement of said patents.[286]

77.[287] The only patent related to the airless No. 2 Process which defendant has acquired from any person other than its own personnel is Simmons patent 2,808,343, which was assigned to defendant on March 5, 1952, by C. C. Simmons, President of Enameled Steel & Sign Company, Chicago, Illinois, pursuant to the terms of a pre-existing agreement between defendant and said company dated March 21, 1949. Approximately two years before defendant commenced the general marketing of its No. 2 Process, it entered into an arrangement with the above company whereunder defendant disclosed confidential engineering and development data on the process and Simmons' company performed research and development work with the process for defendant essentially as a consultant during the course of which it used the process in its own commercial coating of acoustical pans. As a part of this arrangement, the parties entered into the aforesaid written agreement, terminable upon thirty days' notice by either party at any time, licensing Simmons' company, upon favorable terms, to use the process, and providing that the user would treat all information relating to the process

284. Plaintiff's Admission 27, R. III: 56-57; Px. QQQQ, R. III: 386.

285. Plaintiff's Admissions 25(b), 26(b), R. III: 56.

286. Witness H. Ransburg, R. III: 200-01.

287. Since Petitioner has raised no questions on the subject matter of this finding, no record references are cited in support thereof.

as secret and confidential; would disclose to defendant all techniques, knowledge, and information relating to inventions or improvements upon electrostatic coating processes or apparatus; and would assign to defendant any inventions, improvements, or letters patent relating thereto.

78. None of the aforesaid agreements pursuant to which defendant acquired patents or patent rights was entered into by defendant or its predecessor with the purpose or intent of restricting entry of competitors into the field of electrostatic spray-coating equipment, or of coercing the trade into dealing with defendant, and there is no evidence that any of them had such effect.[288]

79. Plaintiff has at no time attempted to secure from anyone a license under any of the patents assigned or licensed to defendant pursuant to any of the aforesaid agreements, nor did plaintiff know of the existence of any of said agreements until after the commencement of this action and discovery depositions herein.[289] None of said agreements, or any right acquired by defendant thereunder, affected plaintiff in any way.[290]

80. Except for replacing defective parts, defendant does not contract to service or maintain the equipment used by its licensees and the licensees are free to perform such service and maintenance themselves, or obtain them from any source they desire.[291] Plaintiff has at no time at-

288. Entire record.

289. Plaintiff's Admissions 22, 23(c) and (d), 24(b), 25(c) and (d), 26(c), 26(d), 29, 30, 31, 32, R. III: 55-57; Plaintiff's Answers to Interrogatories 195, 196, 198, 199, 201, 202, 204, 205, R. III: 51-52.

290. Entire record.

291. Defendant's Answer to Interrogatory 8 (Exs. D-21, D-36 thereto), R. III: 37-41, 431-35.

tempted to engage in the business of servicing electrostatic spray-coating equipment or dealing in used equipment or in replacement parts.[292]

81. Defendant has no monopoly in the marketing of compressed-air electrostatic spray-coating systems.[293] Such systems are, or have been marketed in competition with its No. 1 and No. 2 Processes by the following, some of whom have been so engaged since 1950 or 1951.[294]

Ashdee Electrostatic Products, Inc.
Homewood, Illinois

Scientific Electric Co.
Garfield, New Jersey

Ionic Electrostatic Corp.
Garfield, New Jersey

H. G. Fischer Co.
Franklin Park, Illinois

Staticote Systems, Inc.
Chicago, Illinois

Plaintiff felt that it was free to enter this field at any time, but chose not to do so until 1958.[295]

---

292. Plaintiff's Admissions 14, 15, R. III: 54.

293. Plaintiff's Admission 11, R. III: 53-54; Plaintiff's Answer in Interrogatory 33, R. III: 48; Witness H. Ransburg, R. III: 205; Roche Deposition, R. III: 243-44.

294. Plaintiff's Answers to Interrogatories 27, 28, 33, R. III: 45-48; Roche Deposition, R. III: 222-27; Baur Deposition, R. III: 254; Hedger Deposition, R. III: 255-58.

295. Roche Deposition, R. III: 243-44; Baur Deposition, R. III: 252-54; Rice Deposition, R. III: 261-62; Plaintiff's Answers to Interrogatories 27, 28, R. III: 45-48.

82. Defendant dominates the marketing in the United States of airless electrostatic spray-coating systems, by virtue of the monopoly created by its patents.[296] The defendant has never extended or enlarged said patent monopoly beyond its proper scope.[297] Neither has the defendant a monopoly in any articles of commerce, except the atomizing heads which were specially designed for and have no other use than in defendant's airless electrostatic process.[298]

83. Any article which can be coated by an airless electrostatic system can be coated by means of a compressed-air electrostatic system or by non-electrostatic compressed air guns, operated manually or automatically, the major advantage of the airless electrostatic system over the others, being economic.[299] In painting many articles of manufacture, airless electrostatic, air-type electrostatic, non-electrostatic air-spray systems, flow-coating, roller-coating or dipping, can and are substituted one for the other and are competitive.[300] In the year 1957, the total cost of all paint, varnish and lacquer used industrially in the United States was $643,889,000.[301] The total cost of all paint, var-

---

296. Roche Deposition, R. III: 245-46; Hedger Deposition, R. III: 258-59; Dxs. 3, 4, R. II: 1021-35.

297. Entire record.

298. Entire record.

299. Plaintiff's Answers to Interrogatories 34, 131, 132, 136, 317, R. III: 48-50; Witness H. Ransburg, R. III: 201-03.

300. Rice Deposition, R. III: 262-64; Houlberg Deposition, R. III: 270-73; Witness H. Ransburg, R. III: 200-03.

301. Survey of Current Business (p. S-26), Office of Business Economics, U. S. Department of Commerce, June, 1958.

The Court may judicially notice statistics from official Bureau of Census publications. *Denney* v. *State, ex rel. Basler* (1895), 144 Ind. 503, 525, 42 N. E. 929; *Huntington* v. *Cast* (1898), 149 Ind. 255, 48 N. E. 1025.

nish and lacquer used in that year in defendant's No. 2 Process equipment by its licensees was $6,693,642, or approximately 1% of the total, and the total cost of such material used in that year in air-type electrostatic equipment under defendant's licenses was $3,725,857, or approximately 0.6% of the aforesaid total.[302]

84. Since its incorporation, defendant has employed a total of approximately 45 versions of the equipment and non-equipment license forms for its coating processes, most revisions being minor in nature.[303] So that defendant, and all of its licensees, might share in the use of any improvements developed by licensees who had the advantage of the use of the No. 2 Process in its early field experience, the forms employed from April, 1951, to January, 1955, to license its use included a requirement in substance that the licensee grant back to defendant a royalty-free, non-assignable, non-exclusive license, with right to sublicense, under any patents, inventions, or improvements acquired by licensee during the term of the agreement, and within two years thereafter, relating to air-less electrostatic coating methods and/or apparatus.[304] Some of said license agreements are still in effect, but said grant-back clause has not been included in defendant's forms since January, 1955.[305] Defendant has never acquired any patent or patent right pursuant to said clause in said

302. Witness Howarth, R. III: 131-33.

303. Defendant's Admissions 18, 19, 48, R. I: 196-97, 201; Defendant's Answer to Interrogatory 8 (Exs. D-32 to -38, inclusive), R. I: 145-51, R. III: 24-44.

304. Defendant's Answer to Interrogatory 8, R. I: 46.

305. H. Ransburg Deposition, R. I: 536; Defendant's Answer to Interrogatory 8 (Exs. D-23 to -31, inclusive), R. I: 114-44, R. III: 18-23.

agreement forms.[306] Said clause has not stifled or discouraged research or invention by licensees.[307]

85. The defendant has never leased equipment to any person upon the condition, agreement, or understanding that the lessee should not use or deal in the equipment of a competitor or competitors of the defendant.[308]

86. In granting licenses under its patents, including the patents in suit, defendant impliedly represents to the trade and in interstate commerce, that it is the exclusive owner of the inventions covered by its patents.[309] The defendant never represents that it exclusively owns any other or greater monopoly.[310]

87.[311] For the purpose of enabling manufacturers of paint and other coating materials to adapt their products for use in defendant's systems, defendant has granted to several of such manufacturers licenses to use the process upon uniform terms which differ from those of defendant's standard forms, the principal difference being that the initial fee is lower and no monthly fees are payable. These licenses are for experimental and development work in paint formulation, and are not for production-line finishing. On occasion, one or more of such paint manufacturers

306. E. Ransburg Deposition, R. I: 534-35.

307. Entire record.

308. Entire record.

309. Defendant's Answer to Interrogatory 8 (Exs. D-23 to -38, inclusive), R. I: 114-51, R. III: 18-44.

310. Entire record.

311. Since Petitioner has raised no questions on the subject matter of this Finding, no record references are cited in supported thereof.

has advertised that its product is suitable for use in defendant's process. Such advertising has not been solicited by defendant and is not a condition of any of the aforesaid licenses. None of said licenses, or any of said advertising, has damaged plaintiff in any way.

88. The defendant has never conspired with anyone to restrain trade, or to create a monopoly, or to commit any act of unfair competition to plaintiff's damage.[312]

89. The defendant's program or method of licensing the use of its processes or leasing its equipment, or any of its policies related thereto, considered individually or collectively, has not had the effect of enlarging or extending its patent monopoly beyond the scope contemplated by said patents.[313]

90. The issuance and existence of the Starkey-Ransburg method patent 2,685,536, and the failure of plaintiff to obtain a license thereunder to make and sell equipment for the practice of the patented process on terms preferred by plaintiff, rather than any unlawful business practice of the defendant, prevented the only attempted sale by plaintiff of its SK661 emitter and related equipment, and caused plaintiff to desist from further sales efforts.[314]

---

312. Entire record.

313. Entire record.

314. Roche Deposition, R. I: 679-80; R. III: 239, 243, 245-50.

Alleged Knowledge by Defendant of Relevant Prior Art and Withholding Thereof from Patent Office Concerning the Defendant's Patents in Issue.

91. The defendant, during prosecution of the applications which resulted in the patents in suit, made no material negligent or willful misrepresentations of the Patent Office or withheld from the Patent Office knowledge of pertinent prior art. Defendant did not have knowledge of any prior art more pertinent than the Darrah patent, and that patent was known to the Patent Office.

92. The defendant did not fail to disclaim claims of the patents in issue that were covered by anticipated prior art.

93. The defendant in prosecuting the applications voluntarily cancelled some claims in the applications which issued as the patents in issue but the defendant in no way expressly or impliedly cancelled the remaining claims and particularly claim four in issue which covers plaintiff's emitter.

94. It is unnecessary to find the facts pertinent to defendant's second defense to the plaintiff's cross-counterclaim in view of the findings set forth above and the following conclusions of law.

CONCLUSIONS OF LAW

Upon the foregoing findings the Court concludes the law to be as follows:

1. The Court has jurisdiction of the parties and subject matter of the issues of defendant's counterclaim and supplemental counterclaim and plaintiff's defenses thereto; and of plaintiff's cross-counterclaim and defendant's defenses thereto.

2. The defendant has maintained its burden of proof of the essential facts of defendant's counterclaim and supplemental counterclaim. The plaintiff has not maintained the burden of proof of the essential facts of any one of plaintiff's affirmative defenses to defendant's counterclaim and/or supplemental counterclaim. The law is with the defendant and against the plaintiff on each of the issues of defendant's counterclaim and supplemental counterclaim and plaintiff's defenses thereto.

3. The plaintiff has not maintained the burden of proof of the essential facts of plaintiff's cross-counterclaim. The law is with the defendant and against the plaintiff on each of the issues of plaintiff's cross-counterclaim and defendant's first defense thereto.

4. It is unnecessary to and the Court does not conclude on the defendant's second defense to the plaintiff's cross-counterclaim in view of these findings and conclusions.

5. United States Letters Patent No. 2,685,536, entitled "Method for Electrostatically Coating Articles," as to claims 1 to 6, 8, 10, and 11 herein suit, is in all respects valid.

6. Plaintiff has infringed the aforesaid patent by using and practicing the method or process thereof.

7. United States Letters Patent No. 2,794,417, entitled "Apparatus for Electrostatically Coating Articles" as to claim 4, here in suit, is in all respects valid.

8. Plaintiff has infringed the aforesaid patent by making and using the apparatus thereof.

9. Defendant is entitled to: (a) an injunction against the plaintiff enjoining further infringement, direct or contributory of each of the patents described in conclusions 5 and 7, and (b) a judgment for damages as provided by Title 35, U.S.C., Sections 284-285, including reasonable attorneys' fees, costs, and interest, and for an accounting to ascertain the amount thereof for such infringement of each of the patents described in conclusions 5 and 7 and the cause is continued as to these issues pursuant to the stipulation of the parties and Rule 42(b) of the Federal Rules of Civil Procedure.*

10. The defendant is entitled to judgment on said cross-counterclaim, and to recover its costs from the plaintiff.

11. Every finding of fact deemed a conclusion of law is hereby adopted as a conclusion of law.

Dated this 16th day of June, 1959.

CALE J. HOLDER

CALE J. HOLDER, *Judge, United States District Court Southern District of Indiana*

---

* This conclusion is corrected in accordance with the Court's entry of June 18, 1959, R. II: 1016.

EXCERPT FROM JUVINALL PATENT NO. 2,839,425

FILED NOVEMBER 23, 1951 and ISSUED JUNE 17, 1958

to the speed of article movement, the three dynamic patterns produced respectively by the head when in the three positions A, B, and C will blend to produce on the article 70 a coating of satisfactory uniformity.

In all embodiments of the invention specifically described above, it is contemplated that the spray axes will be normal to the direction of article-travel; but it should be noted that some tipping of any spray-axis in a plane parallel to such direction will not significantly alter the lateral distribution of the coating material. If the spray-axis is so inclined, the deposited static pattern will be elliptical rather than circular, and its major axis will be parallel to the direction of article movement. The dynamic pattern produced will not differ materially, however, from the dynamic pattern produced by a spray arranged with its axis normal to the article-path and having the same transverse extent at the article surface.

I claim as my invention:

1. A method of coating the surface of an article, comprising moving the article over a predetermined path with its surface presented to receive three annular sprays of coating material capable of producing on such surface parallel bands each having two transversely spaced portions of maximum thickness, said sprays being spaced from each other laterally of the path of article movement, two of said sprays having approximately equal diameters smaller than the diameter of the third spray, with all of said sprays being so disposed transversely of the article-path that the individual bands they respectively produce partially overlap each other to produce a composite band having a width greater than but less than twice the width of any individual band, with the portions of maximum thickness of the individual bands being arranged transversely of the composite band to present in order one maximum thickness portion of the first smaller band, one maximum thickness portion of the larger band, one maximum thickness portion of the second smaller band, the other maximum thickness portion of the first smaller band, the other maximum thickness portion of the larger band and then the other maximum thickness portion of the second smaller band.

2. A method of coating the surface of an article, comprising moving the article over a predetermined path with its surface presented to receive three annular sprays of coating material capable of producing on such surface parallel bands each having laterally spaced portions of maximum thickness, said sprays being spaced from each other laterally of the path of article movement, the two outer ones of said sprays having approximately equal diameters and being offset from each other transversely of said path by a distance equal to between 25% and 65% of the distance between the points of maximum thickness of the band produced by either of said sprays, and said latter distance being between 65% and 90% of the distance between the points of maximum thickness of the band produced by the third spray, the axis of the third spray being located transversely of said path substantially midway between the axes of the other sprays.

3. A method as set forth in claim 1 with the addition that said sprays comprise electrically charged coating-material particles, the article being maintained at a potential which will cause it to attract such particles, and said sprays being spaced apart longitudinally of the path of article-movement.

4. A method as set forth in claim 3 with the addition that said sprays are formed by electrostatic atomization.

5. A method as set forth in claim 2 with the addition that said sprays comprise electrically charged coating-material particles, the article being maintained at a potential which will cause it to attract such particles, and said sprays being spaced apart longitudinally of the path of article-movement.

6. A method as set forth in claim 5 with the addition that said sprays are formed by electrostatic atomization.

7. A method of coating an article, comprising moving the article over a predetermined path, directing toward said path from each of three sources located on the same side of the path an annular spray of coating material, said sources being offset from each other transversely of said path, the spray from one of said sources having at the surface of the article a diameter larger than that of the spray from either of the other two sources, the offset distance between the most widely separated of the sources being less than the diameter at the surface of the article of the spray from any of such sources.

8. In electrostatic coating apparatus, a conveyor for moving over a predetermined path an article to be coated, means disposed at one side of said path for directing theretoward three annular sprays of charged coating-material particles for attraction to and deposition on the article, said means comprising three annular atomizing heads, one of said heads being larger than the other two and being located such that the center line of the spray it projects is substantially coplanar with the longitudinal center line of the article-surface to be coated, the other two heads being offset transversely of said path in opposite directions from the first mentioned head a distance less than the diameter of the spray pattern produced on the article by either of said other heads and so oriented that the bands of coating material produced on the article by the three sprays will overlap each other.

9. The invention set forth in claim 8 with the addition that said heads are spaced from each other longitudinally of said path.

10. A method of coating the surface of an article, comprising moving the article over a predetermined path with its surface presented to receive three annular sprays of coating material capable of producing on such surface parallel bands each having two transversely spaced portions of maximum thickness, said sprays being spaced from each other laterally of the path of article movement, and being so disposed transversely of the article path that the individual bands respectively produced partially overlap each other to produce a composite band having a width greater than but less than twice the width of any individual band, to present in order transversely of the composite band one of the maximum thickness portions of each of the bands and then the other maximum thickness portions of each of the bands.

References Cited in the file of this patent

UNITED STATES PATENTS

999,789	Hussey	Aug. 8, 1911
1,861,475	Hopkins	June 7, 1932
2,235,978	Braucher	Mar. 25, 1941
2,421,787	Helmuth	June 10, 1947
2,439,157	Chevannes	Apr. 6, 1948
2,567,781	Ransburg	Sept. 11, 1951
2,568,611	Crouse	Sept. 18, 1951
2,581,957	Jones	Jan. 8, 1952

OTHER REFERENCES

No. 2 Electrostatic Process, Ransburg Electro-Coating Corp. 12 pages rec'd in U. S. Patent Office Sept. 19, 1951.

FILE COPY

Office Supreme Court U.S.
FILED
MAY 4 1961
JAMES R. BROWNING, Clerk

IN THE

Supreme Court of the United States

OCTOBER TERM, 1960.

No. 501

BINKS MANUFACTURING COMPANY,

Petitioner,

vs.

RANSBURG ELECTRO-COATING CORPORATION,

Respondent.

ON WRIT OF CERTIORARI TO THE UNITED STATES COURT OF APPEALS FOR THE SEVENTH CIRCUIT.

REPLY BRIEF FOR THE PETITIONER.

W. DONALD McSWEENEY,
JOHN B. ROBINSON, JR.,
WILLIAM A. MONTGOMERY,
231 South La Salle Street,
Chicago 4, Illinois.

CHARLES F. MERONI,
OTTO R. KRAUSE,
53 West Jackson Blvd.,
Chicago 4, Illinois.

Attorneys for Petitioner.

DALLENBACH, SCHILLE, HERRON,
WAITE & DORSCHEL,
AND
HILL, SHERMAN, MERONI,
GROSS & SIMPSON,

Of Counsel.

PRESS OF BYRON S. ADAMS, WASHINGTON, D. C.

IN THE

Supreme Court of the United States

OCTOBER TERM, 1960.

No. 501

BINKS MANUFACTURING COMPANY,
Petitioner,

vs.

RANSBURG ELECTRO-COATING CORPORATION,
Respondent.

ON WRIT OF CERTIORARI TO THE UNITED STATES COURT OF APPEALS FOR THE SEVENTH CIRCUIT.

REPLY BRIEF FOR THE PETITIONER.[1]

1. *Tie-in.* As detailed in Petitioner's main brief (pp. 28-33), Respondent Ransburg has always joined equipment leases with the licenses it granted, and no one has ever been given a license for the No. 2 Process except in conjunction with an equipment lease. Respondent Ransburg implicitly recognizes that its patents give it no right to engage in this tie-in practice but attempts to explain the practice on the ground that the equipment supplied was the "minimum" needed by the licensee, was not "readily available" elsewhere, and was merely "incidental" or a "necessary evil" to its marketing of licenses (Resp. Br. 10-12, 21-22).

These facts, even if supported by the record (which as shown below is not the case), would not legalize Respondent's practice within the meaning of this Court's tie-in decisions. For there are no exceptions to the rule that tying

[1] This brief is filed pursuant to leave of Court granted during the oral argument of this cause.

arrangements are *per se* violations of the Sherman Act "* * * whenever a party has sufficient economic power with respect to the tying product to appreciably restrain free competition in the market for the tied product and a 'not insubstantial' amount of interstate commerce is affected." *Northern Pacific Railway Co.* v. *United States*, 356 U.S. 1, 6 (1958). We have already demonstrated in our main brief that Respondent has complete dominance in its "tying product"—the Starkey patents—and that a not insubstantial amount of commerce is affected. Respondent in its brief does not, and could not, controvert these facts.

There is another reason why Respondent's attempted justification for its tying agreements has no relevance. As the course of this litigation illustrates, equipment of Respondent's design was by no means the only kind which could be used to practice the patented method.[2] For instance, Petitioner developed equipment of a different design which "* * * simplified everything down to only what we needed for an emitter * * *" and which "* * * could operate * * * with existing equipment with very little modification" (R. I: 710, 711). Respondent's argument that its equipment was "needed" by its licensees is thus based upon the false premise that only Ransburg equipment was usable in practicing the Starkey method patent.[3]

---

[2] Even in the method patent drawings there are illustrated three modified forms of apparatus which could be used to practice the patented method. R. II: 1021, 1023.

[3] Respondent at page 26 of its brief has attempted to show that in his testimony Petitioner's president agreed that persons wishing airless electrostatic coating equipment naturally wanted Ransburg's equipment. To create this impression Respondent has given a misleading quotation from the record by erroneous punctuation and omission of crucial words in that testimony. In fact, Petitioner's president testified that prospective customers "might feel they would be better off getting it from Ransburg than they would from somebody else *who isn't in that particular field*" (R. III: 247; emphasis supplied). Of course, the point of this lawsuit is that Petitioner was ready and capable to enter that "particular field."

In any event, the record does not support Respondent's attempt to minimize the effect of its unvaried practice of tying in equipment leases. That the supply of this equipment was not "incidental" to Respondent's licensing program is refuted by its representations to the trade in sales literature, both before and after 1953, that "Ransburg supplies the complete automatic coating unit * * *", and the absence therein of any mention of a concomitant license under its patents or inventions (Pl Ex. IIII, R. II: 862; Pl. Ex. EEEE, R. II: 854; Pl. Ex. UUUU, R. II: 879-880; R. III: 428-429).[4]

The error of Respondent's statement that it has only supplied equipment not available elsewhere is apparent when reference is made to the typical list of items customarily furnished its license-lessees (Exhibit G, R. I: 182; see also Pet. Brief, pp. 33-34). Additionally, its reliance on the alleged fact that "power packs to supply high voltage" were not obtainable elsewhere for the No. 2 Process is based solely on testimony that Respondent could not get them for the No. 1 Process in 1944 (Resp. Br. 10; R. III: 168-169). Significantly, in 1950, just prior to the commencement of marketing of its No. 2 Process, Respondent wrote its salesmen that power packs were being advertised by others for use in electrostatic painting (Def. Ex. 24, R. III: 283).

Respondent also contends that there is no tie-in because it has always been willing to grant licenses without leases under its patents for the No. 2 Process. There is no indication as to what the terms of such agreements would have been prior to 1953. In that year Respondent prepared and stocked printed forms which, it has claimed, show the terms

---

[4] Respondent finds significance in the fact that since 1953 its sales brochures have stated that it supplies equipment "when desired" (Pl. Ex. UUUU, R. II: 880; Pl. Ex. VVVVV-1, R. III: 429). A fair reading of the brochures leads to the conclusion that the words meant only that the equipment would be supplied *in the event that the customer did any business at all with Ransburg.*

under which such a license would be granted if it were ever to vary from its tie-in program. These forms merely deleted the portions of the license-lease forms which provided for the lease. The new alternative form provided, as shown in more detail in our main brief, pp. 38-40, that the license would be limited to the use of the patents being licensed "with one unit as shown in Ransburg's Drawing No. —." Respondent thus reserved to itself the power to determine what equipment would be used in practicing the license, which was equivalent to the power to require that equipment of its own design be used. Respondent's representation that the drawing "would illustrate whatever apparatus was actually desired by the licensee" (Br. p. 25, n. 10) is no answer even if true. For the crucial consideration is that Respondent, which drafted this agreement form, has retained the *power* to require the use of equipment it has designed and which it alone manufactures. Moreover, the license is restricted to use of the equipment "subject to such changes therein and such further specifications as Ransburg may prescribe * * *," thus giving Ransburg the right, at any time, to require the licensee to make changes in the equipment even though it should be owned by the licensee. It is apparent that Respondent reserved complete power to determine what kind of equipment a licensee under this form would use. The District Court made no finding as to whether the alternative agreement in its terms constituted a realistic alternative; and, clearly, no such alternative was ever offered here.

That the sole alternative to the license-lease agreement offered by Ransburg contained the above-described provisions is shown clearly when reference is made to its "Sales Bulletin No. 148", dated April 4, 1955, which specified by number and enclosure therein its "current forms in the event any licensees desire a license only * * *" (Def. Ex. 28, R. III: 315). Such alternative form for airless electrostatic spraying under the No. 2 Process was shown as form No. 4[redacted] appearing at R. III: 339 (as part of this same Defendant's Exhibit 28).

Respondent has in every instance tied in, with its patent licenses for the No. 2 Process, equipment leases. This method of business in itself is illegal, regardless of whether Respondent may have been "willing" to grant licenses alone. This Court's decision in *B.B. Chemical Co.* v. *Ellis*, 314 U.S. 495 (1942), is unequivocal authority for this proposition. The record there showed that "There is no evidence that the plaintiff [patentee] ever refused * * * to license any shoe manufacturer; nor is there any evidence that any shoe manufacturer ever sought * * * a license" to use the patented process on a royalty basis without purchasing unpatented materials. *B. B. Chemical Co.* v. *Ellis*, 117 F. 2d 829, 837 (C.A. 1, 1941). This Court nevertheless held that the patentee's tie-in method of doing business constituted patent misuse regardless of its expression to the Court of willingness "to give unconditional licenses to manufacturers on a royalty basis." 314 U.S. at 498. The same principle is applicable where a tie-in arrangement is alleged to have resulted in violation of the antitrust laws. That is, it is not necessary that *all* customers have been *forced* to take the tied product or that no one has been refused a sale or lease of the tying product alone. A *general method of doing business by way of tie-in agreement* is itself sufficient to constitute antitrust violations. Thus in *International Salt Co.* v. *United States*, 332 U.S. 392, 398 (1947), this Court held a tie-in practice to violate Section 1 of the Sherman Act and Section 3 of the Clayton Act despite the fact that "The tying clause has not been insisted upon in all leases, nor has it always been enforced when it was included. But these facts do not justify the general use of the restriction which has been admitted here."

There is an additional tie-in issue presented in this case *which is separate and distinct from that discussed above.* This second tie-in question is addressed to Respondent's tie-in of unpatented replacement parts to its license-leases, whether the license be for a patented method or a patented apparatus, or both. All of Respondent's standard lease

forms by which the user receives Respondent's equipment provide that the user shall receive replacement parts from time to time free of any charge in addition to the initial fee already paid and the continuing fees payable monthly. Under this type of agreement, the user is forced economically to take individual unpatented components of the apparatus (wire, hose connectors, and the like) which he could purchase from any supplier and to which no patent monopoly attaches. (see for example, the testimony of licensee Wallin at R. I: 644-645). Competitors of Respondent in these components are thus wholly shut out from this line of commerce.

2. *Grant-back.* Respondent's brief at pages 18 and in footnote 14 on page 32 now alleges that its grant-back clauses were cancelled by letters to licensees in September, 1959. Since that date is subsequent to the date of the District Court's judgment in the case and even to the Petitioner's appeal, it can have no bearing on the issues before this Court except to highlight another attempted purge of its monopolistic activities.

3. *Procurement of Starkey patents.* Respondent utterly fails to justify its wrongful procurement of its Starkey patents on basis of affidavits omitting the material disclosure of its commercial No. 2 system as not being one wherein the electrostatic field *alone* was the sole agent for effecting electrostatic atomization and coating.

For the first time in this case, Respondent belatedly now attempts, at page 36 of its brief herein, to argue away its withholding of material facts in the affidavits of the Starkey patent application as to the operation of its No. 2 system by reference to its later Juvinall patent No. 2,839,425. Aside from the significant fact that such later patent *is not certified as part of the record before this Court,* what was done in the procurement of it has no materiality to the earlier Starkey application.

Respondent conjectures, without any support therefor in this record, that because such Juvinall patent states in a

footnote that a 12-page document was received in the Patent Office on September 19, 1951, it must be assumed that such document was actually on file there, but more important that it is identical to Exhibit IIII (R. III: 455-459). Actually the record shows Respondent issued many brochures and bulletins. Then too, the title, (Ransburg No. 2 Electrostatic Process) of Exhibit IIII does not conform to that of the one allegedly filed in the Patent Office entitled "No. 2 Electrostatic Process Ransburg Electro-Coating Corp." Thus, there is no evidence of record here of the actual content of the brochure Respondent asserts was received in the Patent Office in 1951, let alone any reference to it in the file history of the Starkey application.

Assuming a reference was made in the procurement of other patents of Respondent to a disclosure of the operation of the No. 2 system, it would only serve to emphasize the deliberateness of Respondent in failing to reveal it in the Starkey application affidavits. To have made such disclosure in the affidavits would have immediately made it evident to the Patent Office that the No. 2 system did not have the alleged "heart" of Starkey's invention, namely the use of the field *alone* as the sole agent for effecting atomization and spraying of paint. In this respect, it was unequivocally admitted by Respondent's expert, Dr. Miller (who recorded in 1943 Starkey's concept (R. I: 563)) that in the No. 2 system when the centrifugal force is arrested the field is ineffective as the paint then drops onto the floor. (R. I: 349, 350-1).

Thus, Respondent well knowing its No. 2 system did not embrace "the heart" of Starkey's invention concealed this fact from the Patent Office in affidavits filed to show commercial success of the invention. Further, there is no dispute but that Respondent admitted in this suit (R.A. 2, 30, 37; R. I: 194, 199, 200; Int. 149, R. I: 70) that none of the structures of the Starkey patents was ever commercialized.

The file history (Physical Ex. 5A and 5B) of the Starkey method patent shows on its face that the foregoing material admitted facts were omitted therefrom, and hence this Court can determine for itself, as a matter of law, whether the Respondent was guilty of such inequitable conduct as to bar enforcement of the Starkey method patent as well as the dependent apparatus patent divided therefrom.

The lower courts made no findings or conclusions of law specifically on Respondent's aforesaid omissions. Since as a matter of law such omissions or withholding of evidence clearly involved inequitable conduct, Respondent, under the decisions of this Court is barred from enforcing its Starkey patents in suit.

CONCLUSION

For the reasons stated in this brief and in our main brief, the decision of the Court of Appeals should be reversed and judgment entered ordering the relief requested in Petitioner's main brief.

Respectfully submitted,

W. Donald McSweeney,
John B. Robinson, Jr.
William A. Montgomery,
231 South La Salle Street,
Chicago 4, Illinois,

Charles F. Meroni,
Otto R. Krause,
53 West Jackson Blvd.,
Chicago 4, Illinois,
Attorneys for Petitioner.

Dallstream, Schiff, Hardin,
Waite & Dorschel,
and
Hill, Sherman, Meroni,
Gross & Simpson,
Of Counsel.

SUPREME COURT OF THE UNITED STATES

No. 501.—October Term, 1960.

Binks Manufacturing Co., Petitioner, *v.* Ransburg Electro-Coating Corporation.	On Writ of Certiorari to the United States Court of Appeals for the Seventh Circuit.

[May 8, 1961.]

Per Curiam.

After hearing oral argument and fully examining the record, we conclude that the totality of circumstances as the record makes them manifest did not warrant bringing the case here. Accordingly, the writ is dismissed.